STATE OF VERMONT
AGENCY OF TRANSPORTATION

Scoping Report

FOR

Chelsea BHF 0169(9)

VT Route 110, Bridge 9
Over the First Branch of the White River

May 6, 2014

I. Contents

I. Preface **3**

II. Site Information **3**

Need 3

Traffic 4

Design Criteria 4

Inspection Report Summary 5

Hydraulics 5

Utilities 6

Right Of Way 6

Resources 6

Archaeological: 6

Historic: 6

Natural Resources: 6

Hazardous Materials: 6

Stormwater: 6

III. Maintenance of Traffic **7**

Option 1: Temporary Bridge 7

Option 2: Phased Construction 8

Option 3: Off-Site Detour 9

IV. Alternatives Discussion **10**

No Action 11

Alternative 1: Deck Replacement 11

Alternative 2: Superstructure Replacement (Separate Pedestrian Bridge) 12

Alternative 3: Superstructure Replacement (Single Bridge) 12

Alternative 4: Complete Replacement 13

Pedestrian Safety Issues 13

V. Alternatives Summary **15**

VI. Cost Matrix **16**

VII. Conclusion **17**

VIII. Appendices **19**

I. Preface

A scoping report was completed for this Bridge in December of 2012. A Regional Concerns Meeting was held in Chelsea on March 18, 2013 where the information from that original scoping report was presented. The original proposal was to replace the existing superstructure with prefabricated bridge units utilizing phased construction with a short term closure. The typical section for that proposal included 10 foot lanes and the addition of 3 foot shoulders to accommodate bicycles and pedestrians on both sides of the road. The concern expressed by those present at the meeting was that a sidewalk was needed at this location to accommodate pedestrians traversing the bridge. Based on this feedback, it was decided to modify the scoping report to address this concern. This report is the result of that effort.

II. Site Information

Bridge 9 is located along VT 110 approximately 0.2 miles south of the junction with VT 113 in Chelsea. The bridge is located at the southern end of the Chelsea Historic district and adjacent to Creamery Rd which provides access to the backside of the Chelsea Public School. While the bridge is at the southern end of the Village designation, residential housing continues along VT 110 to the south of the bridge and down Beacon Hill Rd to the south of the bridge. The existing conditions were gathered from a combination of a Site Visit, the Inspection Report, the Route Log and the existing Survey. See correspondence in the Appendix for more detailed information.

Roadway Classification	Rural Major Collector
Bridge Type	Rolled Beam
Bridge Span	84 feet long
Year Built	1936
Ownership	State of Vermont

Need

The following are needs of VT 110 at the southern end of the Chelsea Historic District.

1. Bridge 9 is structurally deficient with local deck failures patched with steel deck plates.

2. The hydraulic opening provided by Bridge 9 is substandard and does not pass a 10 year storm event.

3. The shoulder width on the bridge is not sufficient to safely accommodate bicycles and pedestrians.

4. The transition railing and terminal sections are substandard on three corners of the bridge.

Traffic

A traffic study of this site was performed by the Vermont Agency of Transportation. The traffic volumes are projected for the years 2015 and 2035.

TRAFFIC DATA	2015	2035
AADT	1500	1600
DHV	190	200
ADTT	170	270
%T	0.6	0.9
%D	52	52

Design Criteria

The design standards for this bridge project are the Vermont State Standards, dated October 22, 1997. Minimum standards are based on an ADT between 1500 and 2000 and a design speed of 30 mph.

Design Criteria	Source	Existing Condition	Minimum Standard	Comment
Approach Lane and Shoulder Widths	VSS Table 5.3	10'/3' w/ 5' unpaved shoulder (31')	10'/4' (28')[1]	
Bridge Lane and Shoulder Widths	VSS Table 5.3	10'/0' w/ 5' sidewalk (25')	10'/4' (28')[1]	Substandard
Clear Zone Distance	VSS Table 5.5	none known	14' fill / 12' cut	
Banking	VSS Section 5.13	Normal Crown	8% (max)	
Speed		30 mph (Posted)	30 mph (Design)	
Horizontal Alignment	AASHTO Green Book Table 3-10b	Tangent Alignment	R_{min}=691' @ 6.1%	
Vertical Grade	VSS Table 5.6	~2%	9% (max) for rolling terrain	
K Values for Vertical Curves	VSS Table 5.1	57 sag	30 crest / 40 sag	
Vertical Clearance Issues	VSS Section 5.8	none known	14'-3" (min)	
Stopping Sight Distance	VSS Table 5.1	564'	200'	
Bicycle/Pedestrian Criteria	VSS Table 5.8	3' Shoulder on Approach 0' on Bridge	3' Shoulder	Substandard on Bridge
Bridge Railing (and Approach Railing)	Structures Design Manual Section 13.2	Concrete Bridge Rail w/ w-beam approach	TL-2	Substandard approach
Hydraulics	VTrans Hydraulic Section	Pass $Q_{2.33}$ storm event	Pass Q_{50} storm event with 1.0' of freeboard	Substandard
Structural Capacity	S.M., Ch. 3.4.1	Structurally Deficient	Design Live Load: HL-93	Substandard

[1] Per HSDEI 11-004 (http://vtransengineering.vermont.gov/sites/aot_program_development/files/documents/structures/HSDEI_11-004_-_Minimum_Roadway_Width_of_Pavement.pdf) the minimum width of the lane and shoulder shall be 28'.

Inspection Report Summary

Deck Rating	4 Poor
Superstructure Rating	6 Satisfactory
Substructure Rating	7 Good
Channel Rating	8 Very Good

7/10/2013 This structure needs a rehabilitation project and deck replacement in the near future. Extensive deck deterioration and saturation throughout that has affected the superstructure w/ scattered scaling rust and pitting. JWW/JDM

Hydraulics

From preliminary hydraulics report:

The calculated Q50 design event flow does not pass through the existing structure and overtops the roadway to the South of the bridge location.

When reviewing possible options, it is apparent that a replacement bridge meeting the hydraulic standard cannot be achieved for this location. The bridge location has too many site constraints by being located in a village setting with existing streets, driveways and houses which limit the bridge span and vertical roadway geometry. To further restrict the site conditions, the existing bridge is located within a very flat natural floodplain area where the roadway to the south of the bridge allows for a significant amount of flood relief flow over the roadway.

<u>Recommendations</u>

Based on our analysis using a new structure, the recommendation will be to use a bridge having a 65-foot clear span normal to the stream channel (between the abutment faces) with a low beam elevation at or above 808.1 feet at the Right (South) Abutment with 3H:2V stone fill protection in front of the abutments. The actual clear span of the bridge along the roadway will be approximately 92 feet based on the 45° skew of the bridge. To match the existing roadway alignment along the 45° skew, the bridge should also have the abutments parallel to the stream. The proposed wider structure will not constrict the stream channel width and match the VANR Bank Full Width Equation width.

This option passes the $Q_{2.33}$ flow event with about 1.1’ of freeboard which is greater than the Existing Conditions.

Utilities

The utility information is shown in the Appendix.

There are overhead utilities on the east side of the road. The utility wires do not cross the road at the location of the bridge. An 8" D.I. buried water line is on the east side of the bridge and crosses under the river on that side. It becomes 12" north of the river crossing. A buried sanitary sewer is on the west side of the bridge, size unknown. It also crosses under the river away from and west of the bridge. A sewer line runs down Creamery Road, crosses VT 110 just north of the bridge, and connects to the line running on the west side of the bridge. There are two small diameter (1-1.5" dia.) conduits on the west exterior beam crossing the bridge. These are believed to be abandoned phone lines. With the exception of the small abandoned phone lines, the utilities can be seen on the existing conditions plan in the Appendix.

Depending on the option chosen, utility relocation may be required.

Right Of Way

The existing Right-of-Way is shown on the Layout sheet. It appears that the existing structure is completely within the Right of Way. Depending on the option chosen, it may be necessary to acquire additional temporary rights.

Resources

The resources present at this project are shown on the layout sheets.

Archaeological:
There are no archaeological resources present within the current project area.

Historic:
Bridge 9 is a historic concrete bridge and is located within a historic district. These are Section 106 and Section 4(f) properties.

Natural Resources:
The only regulated resource in this immediate area is the First Branch itself. Wetlands, species/habitat(s) and agricultural soils are all absent. The First Branch is also not classified as Essential Fish Habitat.

Hazardous Materials:
There is an underground storage tank at the school and there is a waste site at the Chelsea Animal Hospital. Both of the sites should be well outside of the project limits and not affected by work on Bridge 9. These sites are shown in the Appendix.

Stormwater:
No known issues.

III. Maintenance of Traffic

The Vermont Agency of Transportation has developed an Accelerated Bridge Program, which focuses on faster delivery of construction plans, permitting, and Right of Way, as well as faster construction of projects in the field. One practice that will help in this endeavor is closing bridges for portions of the construction period, rather than providing temporary bridges. In addition to saving money, the intention is to minimize the closure period with faster construction techniques and incentives to contractors to complete projects early. The Agency will consider the closure option on most projects where rapid reconstruction or rehabilitation is feasible. The use of precast elements in new bridges will also expedite construction schedules. This can apply to decks, superstructures, and substructures. Accelerated Construction should provide enhanced safety for the workers and the travelling public while maintaining project quality. The following options have been considered:

Option 1: Temporary Bridge

A temporary bridge is feasible in this location on both the upstream and downstream side of the bridge. It is not possible to install a temporary bridge on either side of Bridge 9 without acquiring additional temporary Right of Way. No archeological or environment resources would be affected by the installation of a temporary bridge at this site. However, there are historic properties on all four corners of the bridge. Because of the configuration of the properties, placing a temporary bridge on the downstream side of the existing bridge will have the least impact on the historic properties and will avoid the underground sewer line.

The temporary roadway for the downstream option would leave VT 110 south of the bridge at approximately a 30 degree angle. The temporary bridge would span the river nearly perpendicularly and would intersect Creamery Road at approximately 70 degrees east of the existing bridge. The remainder of Creamery Road to the intersection of VT 110 would be paved to effectively route traffic around the existing bridge while it is being rehabilitated.

Placing a temporary bridge on the upstream side of the existing bridge would avoid the overhead utilities and potential conflict with the underground water line. A temporary bridge in this location would require the placement of some fill and possibly some retaining structures along with some tree clearing on the northwest side of the project. Both sides have some pros and cons and either side is feasible, and the decision about the location can be made later in the design process. The upstream layout and limits are shown in the Appendix.

The amount of traffic at this site indicates that a single lane bridge with traffic signals and alternating traffic would be appropriate. While it would be feasible to place a two lane temporary bridge here, the extra impacts and cost associated with a wider approach and bridge are not justified in this location.

The advantage of using a temporary bridge to maintain traffic during construction is that it would allow vehicular traffic to be maintained along the corridor during construction.

In general, the disadvantages of temporary bridges are numerous and this situation is no exception. It would require the acquisition of temporary rights which extends the project development time and increases project development costs. The construction costs are increased to build two bridges at this location rather than just one. The duration of the construction activities would be extended to a second year. The impact to trees and adjacent properties is

increased by installing a temporary roadway and bridge. While traffic would be maintained along the VT 110 corridor, there will be delays and disruptions to traffic for multiple years to accommodate the construction activities. The safety of the traveling public and construction workers is compromised by traffic traveling within and close to the construction site.

Option 2: Phased Construction

Phased construction is the maintenance of one lane of two-way traffic on the existing bridge while building one lane at a time of the proposed structure. This allows one to maintain traffic along the corridor during construction while mitigating the extra expense and impacts required by a temporary bridge.

While the time required to develop a phased construction project would remain the same, the time required to complete a phased construction project would increase over that for one without phasing because some of the construction tasks have to be performed multiple times. The costs also increase for phased construction because of the inconvenience of working around traffic and the effort involved in coordinating the joints between the phases. Another negative aspect of phased construction is the decreased safety of the workers and vehicular traffic, which is caused by increasing the proximity and extending the duration that workers and moving vehicles are operating in the same confined space. Phased construction is usually considered when the benefits include reduced impacts to resources and decreased costs and development time by not requiring the purchase of additional ROW.

As mentioned previously, the traffic volumes are low enough to accommodate alternating one-way traffic with traffic signals during construction. However, the travel way on the existing bridge is only 20’ wide and not wide enough to accommodate a single lane of traffic using ordinary phasing techniques. Some possible options to maintain traffic on the existing bridge while rehabilitating it include shifting the permanent horizontal alignment, using some type of temporary structure in conjunction with the phasing to support traffic, and depending on the rehabilitation option chosen providing a wider than standard bridge typical width for the permanent bridge to allow the construction alignment to be shifted on the rehabilitated portion of the bridge.

A phasing option will be considered which provides a wider than existing typical section and utilizes the extra width for the sidewalk to accommodate one lane of traffic on the existing bridge during construction.

As mentioned previously, the advantages of phasing construction to maintain traffic are that traffic is maintained along the VT 110 corridor during construction while staying within the existing Right of Way and reducing the impacts of a temporary bridge. The duration of the project engineering and construction along with their associated costs should be reduced over the temporary bridge option.

The disadvantages of phasing construction to maintain traffic include increased construction costs and construction durations over a project with no phasing because most construction tasks have to be done multiple times. While traffic would be maintained along the VT 110 corridor, there will be delays and disruptions to traffic to accommodate the construction activities. The safety of the traveling public and construction workers is further compromised because the traffic is traveling

through an active construction site and the vehicles and workers are even closer than they would be with a temporary bridge.

Option 3: Off-Site Detour

This option would close the bridge to traffic during construction and reroute traffic on roads which are appropriate for and chosen based on the volume and type of traffic which will be diverted during construction and the currently existing traffic volumes and composition on those roads. One option would be to detour traffic from the intersection of VT 110 and VT 14 south to VT 132 east to Tucker Hill Rd west on VT 113 and back to VT 110 north of the bridge. Another option would detour traffic from the intersection of VT 110 and VT 14 north to VT 107 west to I-89 north to VT 63 east to VT 14 north to US 302 and back to VT 110.

Neither of these routes is particularly appealing. The end-to-end distances are 50 and 65 miles respectively and both would take approximately 1 hour and 20 minutes to traverse. The route with I-89 would not accommodate bicycle traffic and alternate accommodations would need to be made for traffic that is restricted from the Interstate system. The route utilizing VT 132 is on town highways and would require permissions from the corresponding towns.

There are several local bypass routes in this area that avoid the construction site if VT 110 is closed to through traffic. Local bypass routes are not signed, or official, detour routes and are not necessarily appropriate for all traffic that needs to detour around a site. Because local bypass routes are comprised of public roads that circumvent the road closure in a shorter distance than the official detour, they may see an increase in traffic from passenger cars as locals use them during the closure.

One of the local bypasses in this location entails taking Jenkins Brook Rd south of the bridge to Vershire Center Rd to Town Farm Rd to Densmore Rd to VT 113 and back to VT 110. The end-to-end distance is 6.4 miles and takes approximately 14 minutes to travel.

A map of potential detour routes can be found in the Appendix.

The advantages of closing a section of road during construction and utilizing an off-site detour can be numerous in the right location. It would eliminate the need to use a temporary bridge or phase construction to maintain traffic. This would decrease the cost and amount of time required to design and construct the project. The impacts to adjacent properties and historic resources and amount of temporary rights required to construct this project would also be reduced for this option. The safety of both construction workers and the travelling public will be improved by removing traffic from the construction site.

The main disadvantage to closing the road during construction and maintaining an off-site detour is that traffic would not be maintained through the project corridor during construction, so while there are many advantages to a detour for this project, the roads that are adequate to handle the extra traffic from closing VT 110 create a long and time-consuming detour. Even with the relatively low traffic volumes, one would want to keep the closure periods reasonably short to make this a viable option.

It is traditionally assumed that the road will be closed for construction and when the closure is complete the new bridge will be opened to two lanes of traffic. In order to keep the closure period

as short as possible, a slightly modified hybrid maintenance of traffic option will be considered for the superstructure replacement alternative. In this option, the road will be completely closed for one or two short duration periods, i.e. four days over long weekends. If there is only one short duration closure, the western half of the existing superstructure will be removed, the bridge seats modified, and the corresponding new half of the superstructure will be replaced during this period. The eastern half of the superstructure will then be removed and replaced while two way alternating traffic is traveling on the western side of the bridge. With two closure periods, rather than phasing traffic, the two halves can be replaced during closure periods while the railing, substructure work and other set up and clean up can be done outside the closure periods. This hybrid option is only appropriate for deck and superstructure replacement options and will be considered in lieu of the phasing option for these types of alternatives.

An off-site detour of this length would not be appropriate for the length of time necessary to remove and reconstruct an entire bridge and will not be considered for any complete replacement alternatives.

Safety is a major consideration during the development and construction of a project. Not only the safety of the travelling public and construction workers affected by the construction activities, but also the ability of fire and rescue personnel to reach all areas of a town during construction. Thus, any bypass routes are evaluated to determine if they may be used by service vehicles and first responders to respond to emergencies during a road closure.

The primary fire coverage for the town comes from the Chelsea Fire Station, which is just north of Bridge 9. If the bridge were to be closed, other departments south of the bridge may be able to help respond to calls if needed. The other closest fire departments are Tunbridge or East Randolph, approximately 6 to 6.5 miles away accessed from south of the bridge. The nearest ambulance service is either Barre or White River, which are some distance away from the project site. The nearest hospitals are in Randolph or Berlin. There is police coverage based in Chelsea north of the bridge, so police would need to utilize a bypass route to get south of the bridge. Coordination should occur so that coverage can be maintained if the bridge is closed.

IV. Alternatives Discussion

Bridge 9 is structurally deficient with local deck failures patched with steel deck plates. The bridge is hydraulically inadequate, the shoulder width on the bridge is too narrow to safely accommodate bicycles and pedestrians, and the transition railing and terminal sections are substandard on three corners of the bridge.

The additional constraint imposed on this project is that pedestrian traffic crossing the First Branch of the White River be physically separated from vehicular traffic crossing the river rather than utilize a shared use shoulder.

No Action

This alternative would involve leaving the bridge in its current condition. A good rule of thumb for the "No Action" alternative is whether the bridge can stay in place without any work being performed on the bridge in the next 10 years. Considering that the deck has already been patched many times and is continually deteriorating, it is unlikely that the deck will last another 10 years without be patched or replaced. Thus, the No Action alternative will not be considered further in this report.

Alternative 1: Deck Replacement

This would entail removing the existing deck and replacing it with a new concrete deck. This would include repairs to any cracking and surface deficiencies on the abutments and cleaning and painting the existing beams.

The new typical section on the bridge would include 3 foot shoulders and 10 foot lanes. Pedestrians would be accommodated with a separate 6' wide pedestrian bridge on the upstream side of the bridge. The pedestrian bridge will include its own separate shallow foundations along with a block or sheet pile retaining wall on the southwest side of the bridge to retain the extra fill required for a sidewalk in this location. The cost for this work is assumed to be around $90,000[2].

Many ideas have been proposed for accommodating a raised sidewalk on the rehabilitated bridge including "just hanging it off the side." It is assumed that the notion of hanging a sidewalk off the side of a bridge comes from various truss bridges throughout the state which have sidewalks outside the truss members.

While one could engineer a solution where a sidewalk could be supported by the exterior beam of a deck and beam bridge, it appears that there are no advantages or efficiencies gained by this approach over supporting the sidewalk on its own beams. The exterior girder or girders would need to be designed to carry the extra vertical loads from the sidewalk and sidewalk plow as well as the torsional loads induced by the eccentric loading. The existing abutments are skeletal abutments and the exterior beams are already outside the existing support columns. Adding this extra eccentric load to the abutments would overstress the abutment cap and require the substructure to be modified or reinforced to support this additional load.

Given these additional superstructure and substructure modifications necessary to hang the sidewalk off of the bridge, it is easier and cheaper to place an extra beam under the sidewalk and create an abutment extension to support the extra load. This abutment extension would require cofferdams to work in the dry, excavation 6 feet below the bottom of the stream, and extensive amounts of concrete and backfill to fill the hole created to obviate any potential scour. The costs associated with this extra work are far greater than those required to install a pedestrian bridge on stub abutments on the upstream side of the existing bridge. Thus, the pedestrian bridge is proposed to mitigate the concern about separating the pedestrian traffic from the vehicular traffic.

---

[2] http://vtransengineering.vermont.gov/sites/aot_program_development/files/documents/ltf/BikePedReport_on_Shared_Use_Path_and_Sidewalk_Unit_Costs_2010_FINAL813.pdf

The substructure work, addition of a pedestrian bridge and beam cleaning and painting could all be done while the bridge is open to traffic. The existing deck would then be removed and a new precast deck installed. Construction of a deck with 10' lanes and 3' shoulders is proposed to provide a 28' wide deck with the aesthetic railing. This out-to-out width matches the existing deck width. In order to keep the widened typical within the footprint of the existing superstructure width, the horizontal alignment will be shifted slightly upstream. The 81 ft. span would be unchanged. The bridge and approach railing would be replaced. This alternative would resolve the structural and width issues.

The proposed typical section does not meet the minimum recommended typical width of 14' requested for plowing operations. While all bridge rehabilitation and replacement projects strive to meet this minimum standard, it would not be feasible in this location to place a wider deck on the existing beams and skeletal abutments. Thus, any deck replacement option would necessitate a reduced 26' wide curb to curb typical section.[3]

Alternative 2: Superstructure Replacement (Separate Pedestrian Bridge)

Even though the superstructure is in satisfactory condition, the beams should be cleaned and painted as part of a deck replacement option. It has been found that it is quicker and easier to precast the deck sections on to beams and replace the superstructure as a unit rather than just replace the deck. Because it is quicker and easier, it has been found that it is not much more expensive, if at all, to replace the entire superstructure rather than clean and paint the beams and replace the deck.

This alternative would have the same typical section as the Deck Replacement and maintain the existing bridge length. It would also include the horizontal alignment shift. Substructure work would include repairing any abutment cracks and surface spalling as well as any bridge seat modifications necessary for the new superstructure. The upstream pedestrian bridge would also be included in this option.

Alternative 3: Superstructure Replacement (Single Bridge)

This option would modify the substructure units to accommodate the extra width required to include a sidewalk on the existing bridge rather than a separate pedestrian bridge.

With a brand new wider superstructure including a 5'-6" sidewalk, the Operations Section prefers shoulders and lanes extending 14' from the center line to facilitate plowing. This would create a bridge with an out-to-out width of around 35'-6" which is 7'-6" wider than the existing superstructure. In order to accommodate all of this extra width without excessively shifting the horizontal alignment, abutment extensions would be needed on both the up and downstream sides of the existing bridge.

As was stated previously with the discussion about widening the bridge for the deck replacement, it is easier and cheaper to place an extra beam or two under the widened deck to accommodate the sidewalk and wide shoulders. Then the abutments will be extended laterally to support the extra load. The traditional method to extend the abutments would be to install cofferdams to work in

[3] The reduced width was approved for this location by the Operations and Program Development staff at the monthly DTA meeting in February, 2014 and documented in an email dated February 20, 2014.

the dry, excavate 6 feet below the bottom of the stream, pour a semi-gravity cantilever concrete abutment extension, and then backfill the hole. Other less traditional methods of extending the abutments to eliminate the cofferdams, such as post-tensioning cap extensions on the existing cap or mixing deep and shallow foundations may be considered here. While some of these methods may eliminate the cofferdam and require less disruption to traffic, they will not be less expensive and thus the method of extending the abutments can be chosen later in the design process.

Alternative 4: Complete Replacement

This option would be very similar to Alternative 3, except instead of extending the substructure units to accommodate the increased width the substructure units would be replaced.

With Alternative 3, one would be left with a new deck, new superstructure and new abutments outside the central portion of the bridge and 75+ year old skeletal abutments in the middle of the bridge. Thus, it may make more sense to provide entirely new substructure units rather than leave the 75+ year old abutments in the middle of this new bridge.

If the bridge is to be completely replaced, hydraulics recommended that the length of the bridge be extended by approximately 10' and that the skew be maintained near its existing 45 degrees. This length bridge is outside the range of the shallow precast, prestressed superstructure elements, thus it is assumed that a concrete deck on steel beams would be utilized. This could be accomplished with cast in place construction or precast, prefabricated bridge units (PBUs).

This would rectify the same deficiencies as the deck and superstructure replacement options but would extend the design life from 40 years to 80 years.

The length of time required to install cofferdams, remove the existing abutments and construct a new bridge in this location would exceed the reasonable length of time required for a road closure with an official detour of the length proposed at this location. Thus, the only methods for the maintenance of traffic considered for this alternative will be phasing and use of a temporary bridge.

Pedestrian Safety Issues

This existing sidewalks end approximately 130' from the north end of the bridge and about 300' from the south end of the bridge. There is a dilemma with this project in that it has not been past practice to install over 400' of sidewalk with a bridge rehabilitation or replacement project when the sidewalk did not previously exist while it is also not good practice to end sidewalks in a location where there are no other pedestrian facilities to accommodate the foot traffic off the proposed sidewalk.

In order to extend the sidewalks in this location, additional Right of Way would need to be purchased, extra resources would need to be cleared and the project footprint would be more than doubled. This would violate many of VTrans' priorities with the Road to Affordability of preserving existing infrastructure, minimizing additional Right of Way, minimizing the impacts to environmental and historic resources[4], and providing efficient and cost effective projects. Because the Town requested raised sidewalks in this location, the best option would be for the

[4] http://vtrans.vermont.gov/sites/aot/files/documents/policies/60131-Enhancements-to-Transportation-Projects.pdf

Town to develop and construct a project to extend the existing sidewalks to the bridge before the bridge project is built. In the absence of sidewalks extending to the bridge before this project is constructed, it is recommended that short sidewalk extensions be constructed just off of the proposed pedestrian structures to allow the foot traffic to continue in the shared use shoulders as is currently the situation at this bridge. In addition, a painted crosswalk can be provided at the north end of the bridge to provide a known concentrated pedestrian crossing for students crossing VT 110 on to Creamery Rd to get to school.

V. Alternatives Summary

Based on the existing site conditions, bridge condition, and other recommendations, the alternatives being considered are:

Alternative 1a: Deck Replacement with Traffic Maintained on an Offsite Detour
Alternative 1b: Deck Replacement with Traffic Maintained on a Temporary Bridge
Alternative 2a: Superstructure Replacement (Separate Pedestrian Bridge) with Traffic Maintained on an Offsite Detour
Alternative 2b: Superstructure Replacement (Separate Pedestrian Bridge) with Traffic Maintained on a Temporary Bridge
Alternative 3a: Superstructure Replacement (Single Bridge) with Traffic Maintained on an Offsite Detour
Alternative 3b: Superstructure Replacement (Single Bridge) with Traffic Maintained on a Temporary Bridge
Alternative 4a: Complete Replacement with Traffic Maintained by Phasing
Alternative 4b: Complete Replacement with Traffic Maintained on a Temporary Bridge

VI. Cost Matrix

Chelsea BHF 0169(9)		Do Nothing	Alt 1a	Alt 1b	Alt 2a	Alt 2b	Alt 3a	Alt 3b	Alt 4a	Alt 4b
			Deck Replacement		Super Replace (Separate)		Super Replace (Single)		Complete Replacement	
			Offsite Detour	Temp Bridge	Offsite Detour	Temp Bridge	Offsite Detour	Temp Bridge	Phased Const.	Temp Bridge
COST[1]	Bridge Cost	$0	$533,000	$493,000	$520,000	$481,000	$635,000	$585,000	$1,101,000	$1,001,000
	Removal of Structure	$0	$73,000	$66,000	$78,000	$71,000	$78,000	$71,000	$104,000	$95,000
	Roadway	$0	$283,000	$294,000	$282,000	$293,000	$295,000	$305,000	$568,000	$568,000
	Maintenance of Traffic	$0	$20,000	$175,000	$20,000	$175,000	$20,000	$175,000	$75,000	$175,000
	Construction Costs	$0	$909,000	$1,028,000	$900,000	$1,020,000	$1,028,000	$1,136,000	$1,848,000	$1,839,000
	Construction Engineering + Contingencies	$0	$227,300	$308,400	$225,000	$306,000	$257,000	$340,800	$554,400	$551,700
	Total Construction Costs w/ CEC	$0	$1,136,300	$1,336,400	$1,125,000	$1,326,000	$1,285,000	$1,476,800	$2,402,400	$2,390,700
	Preliminary Engineering[2]	$0	$245,500	$277,600	$243,000	$275,400	$277,600	$306,800	$499,000	$496,600
	Right of Way	$0	$0	$82,300	$0	$82,300	$0	$82,300	$0	$82,300
	Total Project Costs	$0	$1,381,800	$1,696,300	$1,368,000	$1,683,700	$1,562,600	$1,865,900	$2,901,400	$2,969,600
SCHEDULING	Project Development Duration[3]	N/A	2 years	4 years	2 years	4 years	2 years	4 years	2 years	4 years
	Construction Duration	N/A	6 months	18 months	6 months	18 months	6 months	18 months	18 months	18 months
	Closure Duration (If Applicable)	N/A	4 or 8 days	N/A	4 or 8 days	N/A	4 or 8 days	N/A	N/A	N/A
ENGINEERING	Typical Section - Roadway (feet)	3-10-10-3	3-10-10-3	3-10-10-3	3-10-10-3	3-10-10-3	4-10-10-4	4-10-10-4	4-10-10-4	4-10-10-4
	Typical Section - Bridge (feet)	5-0-10-10-0	5.5 & 3-10-10-3	5.5 & 3-10-10-3	5.5 & 3-10-10-3	5.5 & 3-10-10-3	5.5 & 4-10-10-4	5.5 & 4-10-10-4	5.5-4-10-10-4	5.5-4-10-10-4
	Geometric Design Criteria	No Change	Meets Criteria	Meets Criteria	Meets Criteria	Meets Criteria	Meets Criteria	Meets Criteria	Meets Criteria	Meets Criteria
	Traffic Safety	No Change	Improved	Improved	Improved	Improved	Improved	Improved	Improved	Improved
	Alignment Change	No	Slight	Slight	Slight	Slight	No Change	No Change	No Change	No Change
	Bicycle Access	No Change	Improved	Improved	Improved	Improved	Improved	Improved	Improved	Improved
	Hydraulic Performance	No Change	No Change	No Change	No Change	No Change	No Change	No Change	Improved	Improved
	Pedestrian Access	No Change	Improved	Improved	Improved	Improved	Improved	Improved	Improved	Improved
	Utility	No Change	Relocation	Relocation	Relocation	Relocation	Relocation	Relocation	Relocation	Relocation
OTHER	ROW Acquisition	No	Yes	Yes	Yes	Yes	Yes	Yes	Yes	Yes
	Road Closure	No	Yes	No	Yes	No	Yes	No	No	No
	Design Life	<10 years	40 years	40 years	40 years	40 years	40 years	40 years	80 years	80 years

[1] Costs are estimates only, used for comparison purposes.

[2] Preliminary Engineering Costs are estimated starting from the end of the Project Definition Phase.

[3] Project Development Durations start from the end of the Project Definition Phase.

VII. Conclusion

The Agency recommends Alternative 3a: Superstructure Replacement (Single Bridge) with Traffic Maintained on an Offsite Detour.

Structure:
The deck on the existing bridge is in poor condition with holes in it while the substructure is in good condition. Because of the condition of the deck, it makes sense to try to do something quickly. Because of the condition of the substructure, it does not make sense to replace the entire structure. With the combination of these factors, either the deck replacement or superstructure replacement should be considered.

Based on the scoping estimates shown above, the construction costs for replacing an equal square footage of deck and superstructure are comparable. The cleaning, surface preparation and field painting of steel beams are much more difficult and expensive in the field than in the shop. Removing the deck from the existing beams without damaging the beams is difficult and the contractor is not able to reduce the cost of the demolition by salvaging the existing beams; this causes the demolition costs to be closer together as well. The length of time that the contractor is out in the field working on the superstructure is reduced also.

Of the superstructure replacement alternatives, constructing and maintaining a single crossing of the First Branch of the White River at this location is the preferred choice.

Traffic Control:
Keeping in mind that one wants to move this project along as quickly as possible, it makes sense to avoid a temporary bridge at this location, if at all possible, to streamline the design process. By utilizing a detour instead of a temporary bridge, it is also possible to minimize the impacts to the adjacent landowners and historic properties while producing a safer, faster and cheaper project to construct.

The traffic through this corridor is a modest 1500 vehicles per day. The proposed closure is a combined 8 days, which could be split into two 4 day closures. If this length of time is too cumbersome, the closure period can be reduced to one 4 day closure while the remainder of the work can be done with traffic traveling through the construction site. While the official detour is long and time consuming to circumvent the construction in this location, there are several bypass routes that local traffic can use during this short closure period.

The general procedure used when roads are closed in a community is to provide the affected towns the opportunity to determine the best time for the closure. The traditional window for closures within which the towns are able to choose is between June 1 and September 1. This provides a high probability for success because of the long days, favorable weather, low water and lack of restrictions for in-stream work. Within that allowable period, the community can balance the impacts to schools and businesses and any other community events. This process has worked well at providing a high rate of success to allow the construction to be completed within the closure period and as well as providing the best outcomes for the towns based on their schedule and needs. It is anticipated that this same process will be utilized for this project.

Pedestrian Issues:

A raised sidewalk on the bridge with short sidewalks off the end of the bridge will be provided to allow pedestrians to cross the First Branch of the White River separate from vehicular traffic. A painted crosswalk will be provided at the end of the sidewalk to the north of the bridge to cross VT 110. The sidewalk to the south of the bridge will convey the pedestrian traffic into the shoulder of VT 110.

Miscellaneous Issues:

The ornamental lighting will be included as an option in the contract. A special finance and maintenance agreement will be required to construct the sidewalk and ornamental lighting on this project. In general, these agreements stipulate that the local municipality pay the costs of installing and maintaining the lighting and guaranteeing that the sidewalk is maintained free of snow and other obstructions. The exact requirements for this agreement will be developed later in the project process.

It is assumed that the project as scoped can move through the development process within 2 years from the time that the project is defined, with the hope that the deck can be replaced before any other work is required on the bridge or public safety is compromised in any way. If Right of Way other than Town Highway Right of Way is required which will extend the development duration past this two year period, then the preferred alternative would revert to Alternative 4b: Complete Replacement with Traffic Maintained on a Temporary Bridge.

VIII. Appendices

- Site Pictures
- Town Map
- Bridge Inspection Report
- Hydraulics Memo
- Preliminary Geotechnical Information
- Natural Resources Memo
- Hazardous Waste Sites
- Archaeology Memo
- Historic Memo
- Stormwater Memo
- Utility Information
- Amenities Policy
- Crash Data
- Detour Routes
- Plans
    - Existing Conditions
    - Proposal
        - Typical Sections
        - Layout
        - Profile
    - Temporary Bridge Layout

Deteriorated Deck and Steel Beam Corrosion

Deteriorated fascia deck and steel beam

Looking south at the Creamery Rd intersection with VT 110

Looking north over the bridge

Looking upstream from the bridge

Looking downstream from the bridge

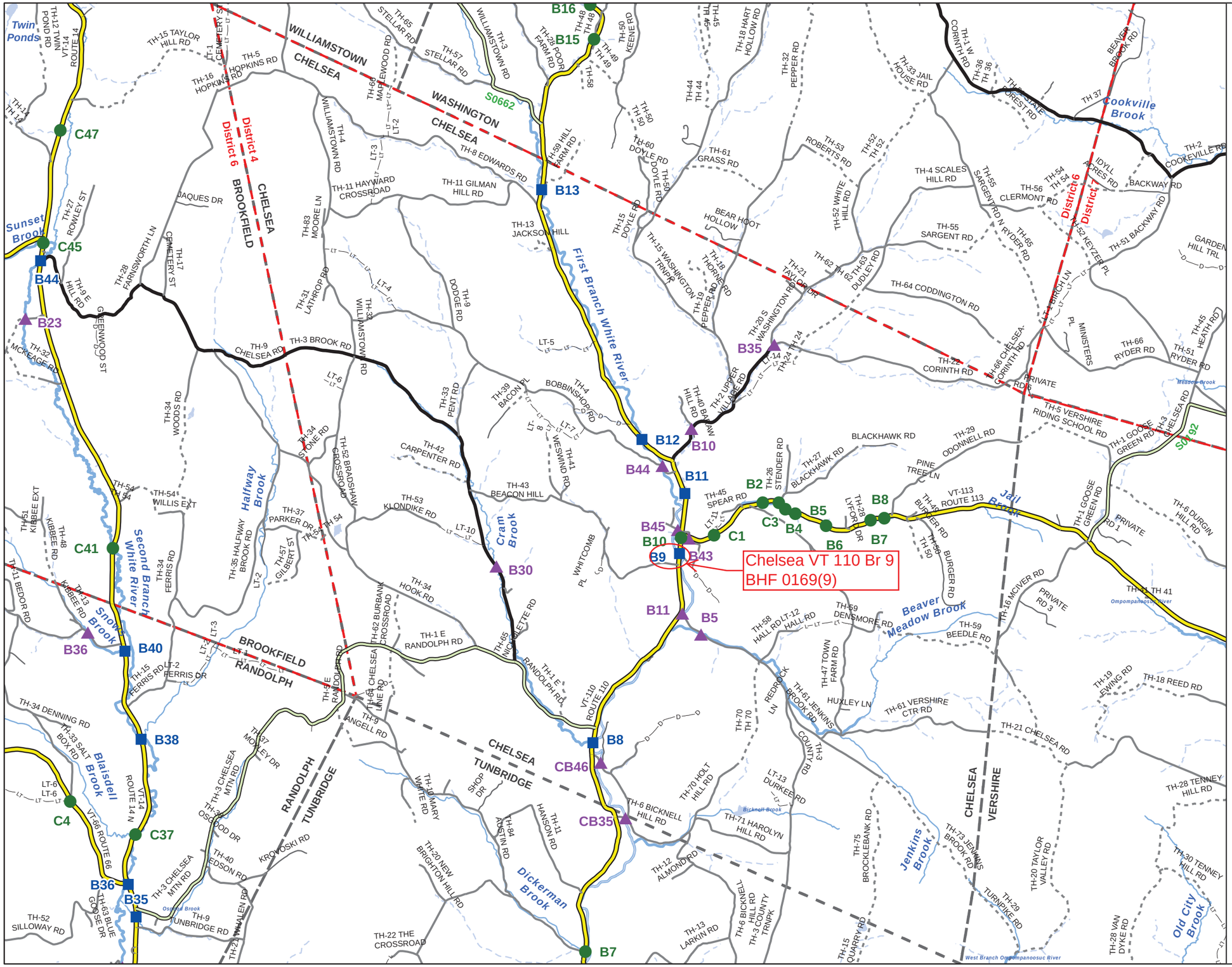

Scale 1:58,382

N

- INTERSTATE
- STATE LONG
- STATE SHORT
- TOWN LONG
- FAS/FAU
- FAS/FAU HWY
- INTERSTATE
- STATE HIGHWAY
- CLASS 1
- CLASS 2
- CLASS 3
- CLASS 4
- LEGAL TRAIL
- PRIVATE
- DISCONTINUED
- DISTRICT
- POLITICAL BOUNDARY
- NAMED RIVERS-STREAMS
- UNNAMED RIVERS-STREAMS

Produced by:
Mapping Unit
Vermont Agency of Transportation
August 2011

CHELSEA
ORANGE COUNTY
DISTRICT # 4

STRUCTURE INSPECTION, INVENTORY and APPRAISAL SHEET

Vermont Agency of Transportation ~ Structures Section ~ Bridge Management and Inspection Unit

Inspection Report for CHELSEA **bridge no.:** 00009 **District:** 4

Located on: VT 00110 ML **ove** 1ST BRANCH WHITE R **approximately** 0.2 MI S JCT. VT.113 **Owner:** 01 STATE-OWNED

CONDITION

Deck Rating: 4 POOR

Superstructure Rating: 6 SATISFACTORY

Substructure Rating: 7 GOOD

Channel Rating: 8 VERY GOOD

Culvert Rating: N NOT APPLICABLE

Federal Str. Number: 200169000909042

Federal Sufficiency Rating: 058.9

Deficiency Status of Structure: SD

AGE and SERVICE

Year Built: 1936 **Year Reconstructed:** 0000

Service On: 5 HIGHWAY-PEDESTRIAN

Service Under: 5 WATERWAY

Lanes On the Structure: 02

Lanes Under the Structure: 00

Bypass, Detour Length (miles): 37

ADT: 002100 **% Truck ADT:** 06

Year of ADT: 1998

GEOMETRIC DATA

Length of Maximum Span (ft): 0081

Structure Length (ft): 000084

Lt Curb/Sidewalk Width (ft): 5

Rt Curb/Sidewalk Width (ft): 0.7

Bridge Rdwy Width Curb-to-Curb (ft): 20

Deck Width Out-to-Out (ft): 28

Appr. Roadway Width (ft): 031

Skew: 45

Bridge Median: 0 NO MEDIAN

Min Vertical Clr Over (ft): 99 FT 99 IN

Feature Under: FEATURE NOT A HIGHWAY OR RAILROAD

Min Vertical Underclr (ft): 00 FT 00 IN

STRUCTURE TYPE and MATERIALS

Bridge Type: ROLLED BEAM

Number of Approach Spans 0000 **Number of Main Spans:** 001

Kind of Material and/or Design: 3 STEEL

Deck Structure Type: 1 CONCRETE CIP

Type of Wearing Surface: 6 BITUMINOUS

Type of Membrane 0 NONE

Deck Protection: 0 NONE

APPRAISAL *AS COMPARED TO FEDERAL STANDARDS

Bridge Railings: 1 MEETS CURRENT STANDARD

Transitions: 0 DOES NOT MEET CURRENT STANDARD

Approach Guardrail 1 MEETS CURRENT STANDARD

Approach Guardrail Ends: 0 DOES NOT MEET CURRENT STANDARD

Structural Evaluation: 6 EQUAL TO MINIMUM CRITERIA

Deck Geometry: 2 INTOLERABLE, REPLACEMENT NEEDED

Underclearances Vertical and Horizontal: N NOT APPLICABLE

Waterway Adequacy: 6 OCCASIONAL OVERTOPPING OF ROADWAY WITH INSIGNIFICANT TRAFFIC DELAYS

Approach Roadway Alignment: 8 EQUAL TO DESIRABLE CRITERIA

Scour Critical Bridges: 8 STABLE FOR SCOUR

DESIGN VEHICLE, RATING, and POSTING

Load Rating Method (Inv): 1 LOAD FACTOR (LF)

Posting Status: D OPEN, TEMPORARY SHORING

Bridge Posting: 5 NO POSTING REQUIRED

Load Posting: 10 NO LOAD POSTING SIGNS ARE NEEDED

Posted Vehicle: POSTING NOT REQUIRED

Posted Weight (tons):

Design Load: 2 H 15

INSPECTION and CROSS REFERENCE

X-Ref. Route:

Insp. Date: 072013 **Insp. Freq. (months)** 12 **X-Ref. BrNum:**

INSPECTION SUMMARY and NEEDS

7/10/2013 This structure needs a rehabilitation project and deck replacement in the near future. Extensive deck deterioration and saturation throughout that has affected the superstructure w/ scattered scaling rust and pitting. JWW/JDM

09/16/2011 IRENE Heavy debris build up abut 1 needs to be removed. MK JM

04/12/2011 & 11/08/2011 The deck is in need of full replacement. Local deck failures may occcur anytime anywhere. The concrete spindles on both sides are in need of repair work. The steel is in need of full paint recoat. The left beam rail and posts of approach No.2 are in need of repairs. 11/08/2011 Assessment inspection after Tropical Storm Irene (Round #2). Debris build-up lies between the steel beams and in front of abutment No.1. Removal is needed. PLB

04/08/2009 - Bridge needs deck replacement. Steel superstructure and the concrete substructure units need only minor attention. The asphalt overlay has chronic deterioration as the supplemental steel plating flexes and loosens over time. - MJ/DS

VT AGENCY OF TRANSPORTATION PROGRAM DEVELOPMENT DIVISION

HYDRAULICS UNIT

TO: Chris Williams, Structures Project Manager

FROM: Brian Bennett, Hydraulics Project Engineer (McFarland Johnson)
via Nick Wark, VTrans Hydraulic Engineer

DATE: August 27, 2012

SUBJECT: CHELSEA – BHF-0169(9) – VT 110 Bridge 9 over 1st Branch of White River

---

We have completed our preliminary hydraulic study for the above referenced site, and offer the following information for your use:

Existing Bridge Information

The original bridge was constructed in 1936 based on available information. The bridge is owned by the State. The bridge is a 2-lane single-span constructed of rolled beams having a concrete deck with an asphalt surface. There is also a sidewalk on the West side of the bridge. The total width of bridge is approximately 28 feet normal to the roadway. The normal clear span to the river between the abutment faces is approximately 55 feet, but the bridge is significantly askew to the river at approximately 45° which has a clear span of approximately 78 feet along the roadway. The effective width of the bridge along the river when accounting for the skew is approximately 40 feet. The total existing superstructure depth is approximately 4 feet based on record information and verified with field measurements. The existing abutments are cast-in-place concrete. These abutments are basically parallel with the stream channel at this location. The approximate maximum height to the bottom of the superstructure to the streambed is approximately 7 - 8 feet. The structure is located on an incised channel in a relatively straight reach of the river having a wide floodplain area with bends in the channel located just upstream and downstream of the bridge.

The calculated Q_{50} design event flow does not pass through the existing structure and overtops the roadway to the South of the bridge location. None of the flow events meet the hydraulic standard for this structure based on our analysis of the Existing Conditions. There are a significant amount of site constraints for this bridge location which include existing utilities, streets, driveways and houses located adjacent to the bridge location. We did not evaluate the scour for the existing or any proposed bridge configurations as part of the preliminary design. Scour calculations will be performed during final hydraulics.

Recommendations

When reviewing possible options, it is apparent that a replacement bridge meeting the hydraulic standard cannot be achieved for this location. The bridge location has too many site constraints by being located in a village setting with existing streets, driveways and houses which limit the bridge span and vertical roadway geometry. To further restrict the site conditions, the existing bridge is located within a very flat natural floodplain area where the roadway to the south of the bridge allows for a significant amount of flood relief flow over the roadway. Therefore, the bridge option selection criteria should be to provide a bridge opening that does not restrict the bank full width of the existing channel and does not create any worse backwater flooding conditions than the existing conditions.

It is assumed a replacement structure will be located in the existing roadway alignment based on the site constraints. It is also anticipated the proposed deck will be similar to the Existing Conditions.

For a replacement structure, we have anticipated that the proposed abutments will be vertical face concrete abutments with sloped stone fill scour protection placed in front of the abutments.

Based on our analysis using a new structure, the recommendation will be to use a bridge having a 65-foot clear span normal to the stream channel (between the abutment faces) with a low beam elevation at or above 808.1 feet at the Right (South) Abutment with 3H:2V stone fill protection in front of the abutments. The actual clear span of the bridge along the roadway will be approximately 92 feet based on the 45° skew of the bridge. To match the existing roadway alignment along the 45° skew, the bridge should also have the abutments parallel to the stream. The proposed wider structure will not constrict the stream channel width and match the VANR Bank Full Width Equation width. It was assumed that the bridge deck should have a slope of approximately 0.5% in a North to South direction. Therefore, the new top of bridge final grade should be basically the same on the Left (North) approach and transitioned back down to the existing roadway grades on the Right (South) approach to the structure. The roadway to the South of the bridge will continue to allow the flood waters to overtop the roadway and act as a relief channel for flooding events or in the event of a blockage of the bridge opening. It is noted that this option passes the $Q_{2.33}$ flow event with about 1.1' of freeboard which is greater than the Existing Conditions.

As noted above, scour was not reviewed during the preliminary design. However based on the velocities from the analyses and evidence from the site, it is anticipated that Type 3 Stone Fill will be necessary for armoring the abutments and channel banks near the replacement structure.

<u>Temporary Bridge</u>
It is unclear whether a temporary will be used during the construction of the new bridge, but this issue will need to be resolved prior to final hydraulics.

Please contact us if you have any questions or if we may be of further assistance.

BMB
cc: Hydraulics Project File via NJW
Hydraulics Chrono File

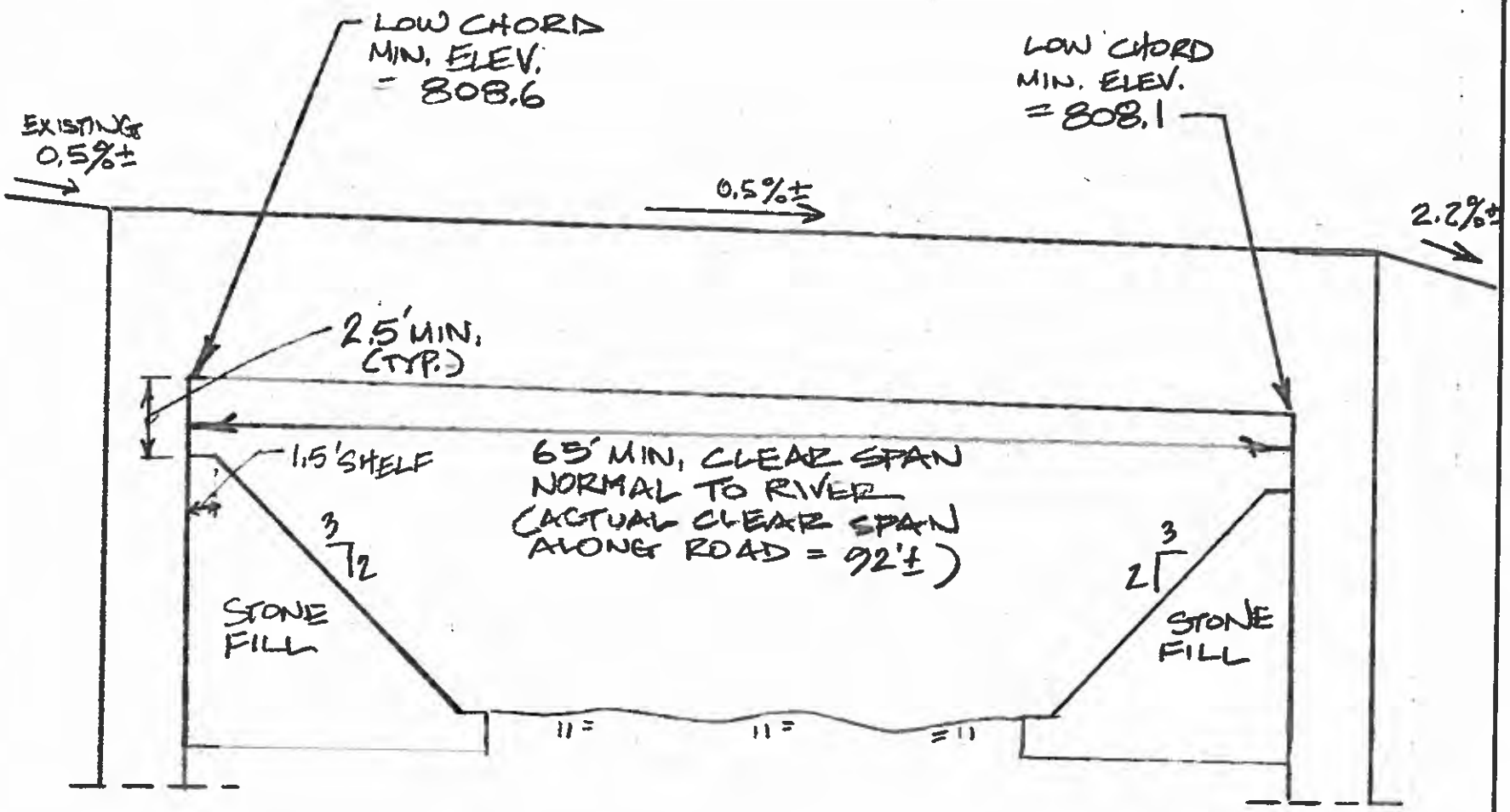

NOTE: ABUTMENT FOUNDATIONS UNKNOWN.
MAJOR SKEW OF 45° TO ROADWAY.
IF SPREAD FOOTINGS ARE USED,
THE DEPTH MUST BE AT LEAST 6'
BELOW MIN. STREAMBED ELEVATION.

VTrans Working to Get You There
Vermont Agency of Transportation

JOB CHELSEA VT 110 BRS
BHF-0169(9) 12C150
CALCULATED BY BMB DATE 8-27-12
CHECKED BY DATE
SCALE N.T.S.

AGENCY OF TRANSPORTATION **OFFICE MEMORANDUM**

To: Chris Williams, P.E., Structures Project Manager

LAR CCB

From: Laura Ripley, Geotechnical Intern, via Christopher C. Benda P. E., Soils and Foundations Engineer

Date: June 27, 2012

Subject: Chelsea BHF 0169(9) Preliminary Geotechnical Information

1.0 INTRODUCTION

The Soils and Foundations Unit within the Materials and Research Section has performed a preliminary geotechnical investigation for Bridge No. 9, which crosses the first branch of the White River in the town of Chelsea, VT. This structure is located on VT Route 110, about 0.2 miles south of the intersection of VT 110 and VT 113. This report includes a site description, available data, and any pertinent field observations. The materials referenced in this investigation include: VTrans boring files and record plans, Agency of Natural Resources (ANR) water well logs, USDA Surficial Geologic maps, and VTrans Bridge Inspection Photos.

2.0 SUBSURFACE INVESTIGATION

2.1 Previous Projects

Record plans were reviewed for the project bridge, however no subsurface information was available. The plans included details of the abutments, which are cantilevered stemwalls reinforced with hooked F-bars. There were also details for the 5-foot sidewalk on the west side of the bridge, which currently has experienced significant erosion.

2.2 Water Well Logs

The ANR provides published water well logs, which were referenced with data from wells that were within a 625 foot radius. The data provided an estimated depth to bedrock and soils types expected to be encountered on the site. It should be noted that this information is dependent upon field data collection by various unknown personnel and therefore provides only an approximation of the field conditions. The corresponding well locations are highlighted in Figure 1.

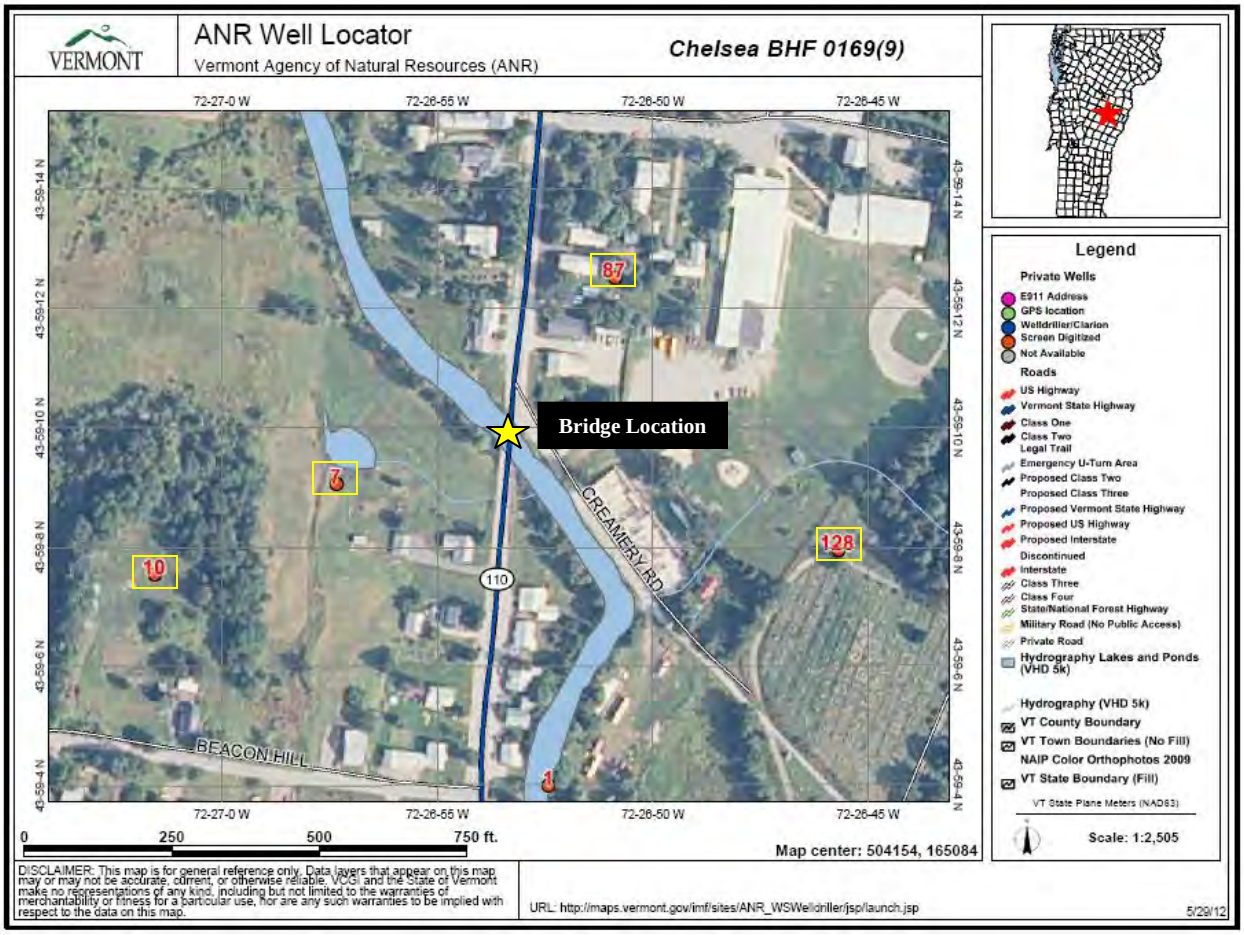

Figure 1. Site map with well locations.

Four wells were identified within the 625 foot radius from the bridge site. The bedrock and overburden information for each well is listed in Table 1.

Table 1. ANR Water Well logs.

Well Number	Distance From Project (feet)	Depth to Bedrock (feet)	Overburden Material
87	330	41	Gravel
7	320	15	Clay; gravel and sand
128	600	25	Hardpan (very dense gravelly silt)
10	625	18	Sand and coarse gravel

2.4 USDA Soil Survey

The U.S. Department of Agriculture provides online geology maps with published soil data. These indicated that the existing soils at the project site consist of Hadley very fine sandy loam. These soils are typically very deep to bedrock and well draining, with a water table depth around 4.0 to 6.0 feet.

2.5 USGS Bedrock Maps

The United States Geologic Survey (USGS) publishes online bedrock maps with subsurface information. The data corresponding to this site location indicates that the bedrock conditions consist of phyllite and meta-limestone, and are described as "*dark-gray to silvery-gray, lustrous, carbonaceous muscovite-biotite-quartz (+/-garnet) phyllite containing abundant beds of punky-brown-weathering, dark-bluish-gray micaceous quartz-rich limestone in beds ranging from 10 cm to 10 m thick.*"

3.0 FIELD OBSERVATIONS

A site visit was conducted on June 7, 2012. Pertinent information was gathered in order to determine any potential issues with future boring locations and/or foundation design considerations.

Figure 3. View of existing bridge, facing south.

The streambed material consisted of cobbles, with a higher concentration upstream. There were large rectangular rip rap stones lining the channel on either side under the bridge as well as downstream. This condition could cause conflicts with both boring and construction operations.

Overhead utilities were observed on the east side of the bridge, which may pose problems during construction or drilling as well. There were also two utility conduits noted that run along the west side, as well as a water main under the bridge. A sewer main was located on the southwest side of the project; offset about 10 feet from pavement. Surrounding residential areas may require permission to drill on private property; however it is recommended that the borings are drilled in the roadway due to the location and high concentration of utilities in the area.
When determining appropriate traffic control measures during construction and the drilling operations, consideration should be given to the nearby intersection with Creamery Rd. has poor visibility due to bridge rails obstructing sight distances; see Figure 4.

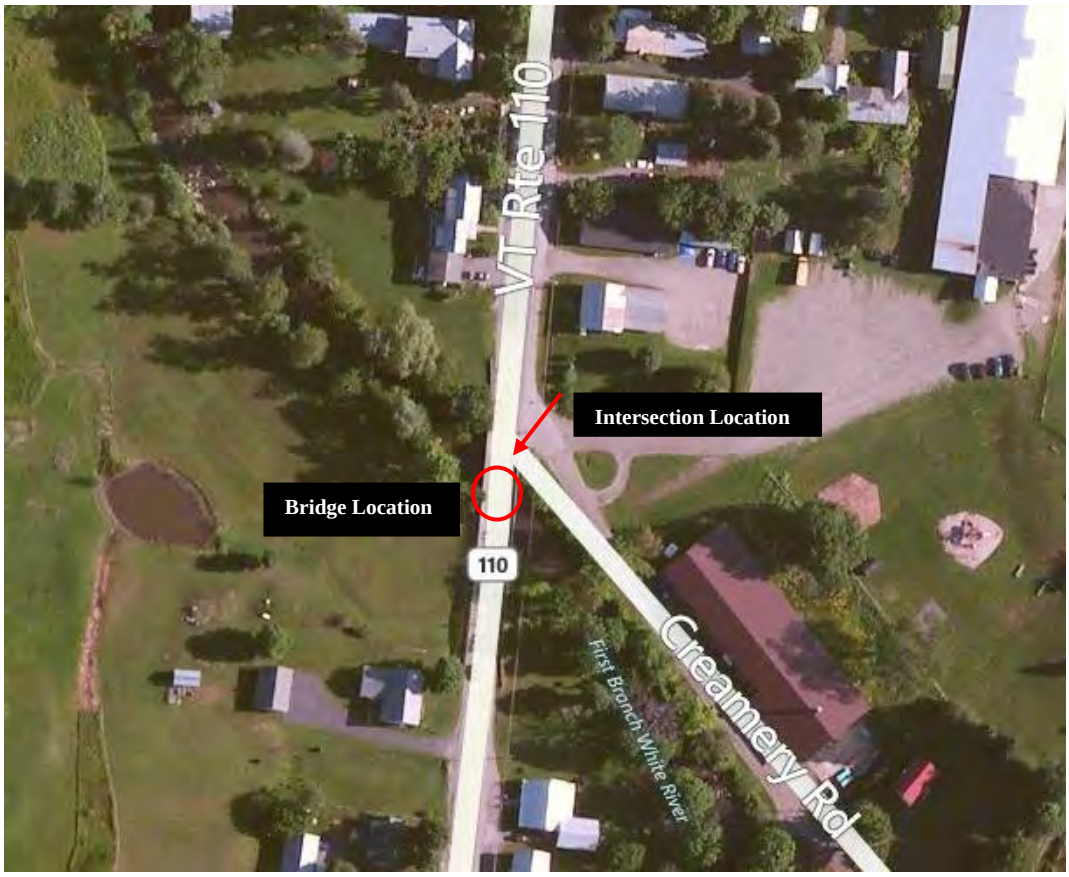

Figure 4. Bridge proximity to the Creamery Rd. junction.

4.0 RECOMMENDATIONS

Based on this information, possible options for a bridge replacement include the following:

- Cantilevered stemwall on spread footings
- Pile caps on a single row of H-piles
- Stub abutment on MSE walls

It is recommended that a minimum of two borings drilled to bedrock be taken at opposite corners of the bridge in order to assess the subsurface conditions. The suggested locations for these

borings are in the roadway; one in the northwest and southeast corners. If necessary and depending on the soil strata, an additional two hand steel soundings can be taken at corresponding ends on order to obtain accurate bedrock information. If any variable conditions are noted, the recommendations should be reevaluated.

5.0 CONCLUSION

If you have any questions or would like to discuss this report, please contact us by phone at (802) 828-2561.

LAR

cc: Read File
Project File/CCB

AGENCY OF TRANSPORTATION **OFFICE MEMORANDUM**

TO: Lee Goldstein, Environmental Specialist

FROM: John Lepore, Transportation Biologist

DATE: April 2, 2012

SUBJECT: Chelsea BHF 0169 (9) & (10)
VT 110 Br. 9 & 11 over First Branch White River

The purpose of this memorandum is to let you know that only regulated resource in this immediate area is the First Branch itself. Wetlands, species/habitat(s) and agricultural soils are all absent.

There First Branch is also not classified as Essential Fish Habitat.

There is no preference as to the where a temporary structure would be placed, but I do ask that the entire channel (beyond OHW) be spanned for ease of permitting…

If you have any questions about this, call me at 828-3963.

Hazardous Waste Sites

Vermont Agency of Natural Resources

vermont.gov

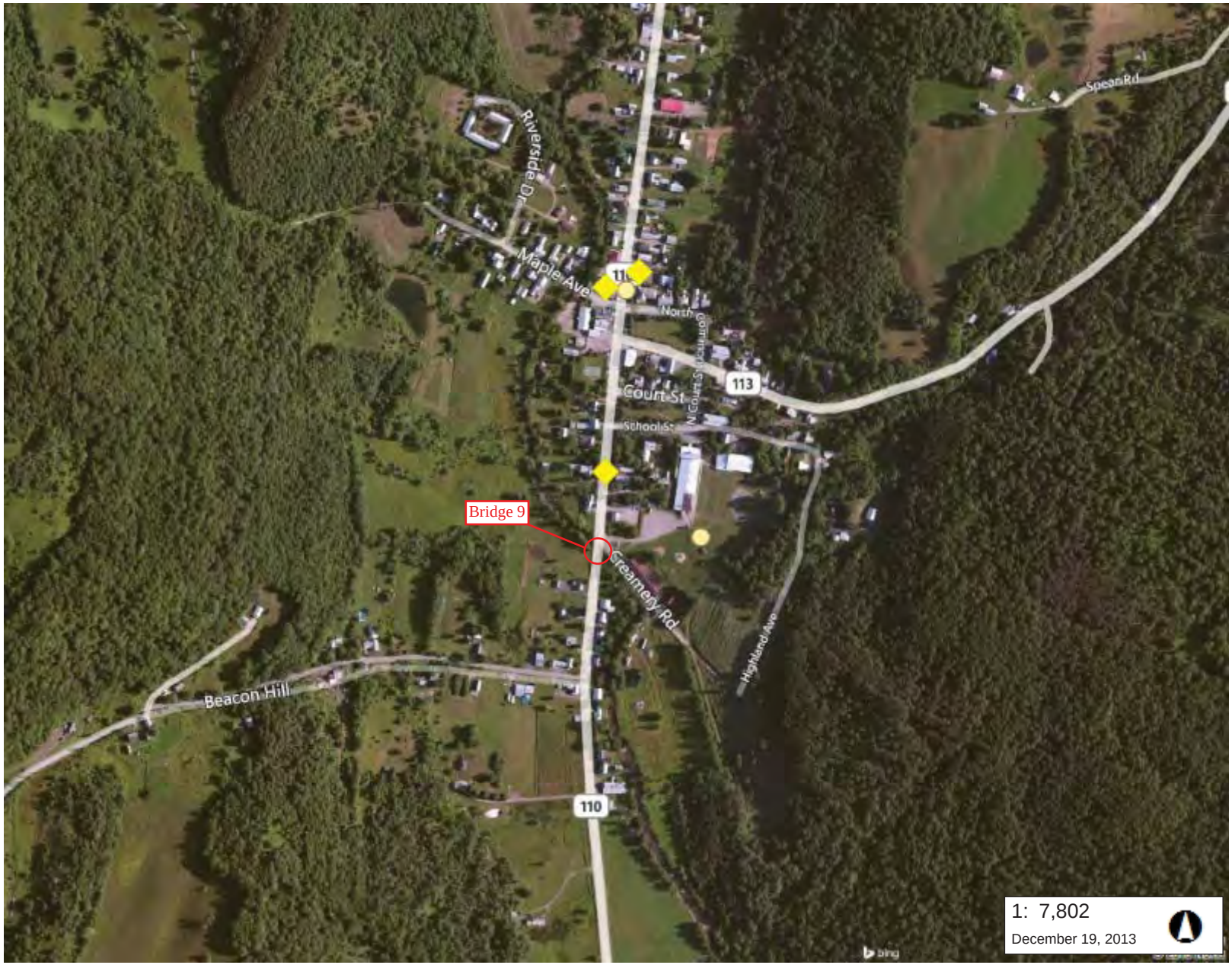

LEGEND

Landfills
- OPERATING
- CLOSED

Hazardous Waste Site

Hazardous Waste Generators

Brownfields

Underground Storage Tank (w

Town Boundary

NOTES

Map created using ANR's Natural Resources Atlas

396.0 0 198.00 396.0 Meters

WGS_1984_Web_Mercator_Auxiliary_Sphere 1" = 650 Ft. 1cm = 78 Meters

© Vermont Agency of Natural Resources

THIS MAP IS NOT TO BE USED FOR NAVIGATION

DISCLAIMER: This map is for general reference only. Data layers that appear on this map may or may not be accurate, current, or otherwise reliable. ANR and the State of Vermont make no representations of any kind, including but not limited to, the warranties of merchantability, or fitness for a particular use, nor are any such warranties to be implied with respect to the data on this map.

VERMONT

Jeannine Russell
VTrans Archaeology Officer
State of Vermont
Environmental Section
One National Life Drive
Montpelier, VT 05633-5001
www.aot.state.vt.us

[phone] 802-828-3981
[fax] 802-828-2334
[ttd] 800-253-0191

Agency of Transportation

To: Lee Goldstein, VTrans Environmental Specialist

From: Jeannine Russell, VTrans Archaeology Officer
via Brennan Gauthier, VTrans Assistant Archaeologist

Date: 6/1/2012

Subject: Chelsea BHF 0169(9) – Archaeological Resource ID

Lee,

A field visit for Chelsea BHF 0169(9) was conducted on 5/25/2012 with a finding of no archaeological resources within the general project area. The overall site rates low on the environmental predictive model for precontact archaeology. Therefore, there are *no archaeological resources* present within the current project area.

Please feel free to contact me with any questions or concerns,

Brennan

Brennan Gauthier
VTrans Assistant Archaeologist
tel. 802-828-3965
Brennan.Gauthier@state.vt.us

VTrans Working to Get You There
Vermont Agency of Transportation

Goldstein, Lee

From: O'Shea, Kaitlin
Sent: Tuesday, June 26, 2012 3:10 PM
To: Goldstein, Lee
Subject: Historic Resource ID - Chelsea BHF 0169(9)

Lee,

I have completed the historic resource ID for Chelsea BHF 0169(9): Bridge 9 is a historic concrete bridge and is located within a historic district. These are Section 106 and Section 4(f) properties. These resources have been digitally mapped in Arcmap in the historic preservation database.

Thanks,
Kaitlin

Kaitlin O'Shea
Historic Preservation Specialist
Vermont Agency of Transportation

802-279-0869
Kaitlin.O'Shea@state.vt.us

Goldstein, Lee

From: Armstrong, Jon
Sent: Thursday, May 17, 2012 3:44 PM
To: Goldstein, Lee
Subject: RE: Environmental Request NOTIFICATION: CHELSEA BHF 0169(9)

Hi Lee,
I have no stormwater related concerns of note for this project.

Jonathan B. Armstrong, PE
VTrans Stormwater Management Engineer
(802) 828-1332

"*We forget that the water cycle and the life cycle are one*."
- Jacques Cousteau

```
><((((º>`·.¸¸.·´¯`·.¸.·´¯`·...><((((º>¸.
·.¸.,..·´`·.. ><((((º>`·.¸¸.·´`·.¸.·´¯`·...><((((º>
```

From: Goldstein, Lee
Sent: Tuesday, March 27, 2012 4:45 PM
To: Gingras, Glenn; Armstrong, Jon; O'Shea, Kaitlin; Gauthier, Brennan
Subject: FW: Environmental Request NOTIFICATION: CHELSEA BHF 0169(9)

Hi pilot team—resource ID requested!
Thanks…
Lee

Lee D.R. Goldstein, MLA
Environmental Specialist, SE Region
VTrans PDD, Environmental Section
Vermont Agency of Transportation
1 National Life Drive--Drawer 33
Montpelier, VT 05633
e-mail: lee.goldstein@state.vt.us
Tel.: 802-828-3985 Fax: 802-828-2334

From: EnterpriseSQL@state.vt.us [mailto:EnterpriseSQL@state.vt.us]
Sent: Tuesday, March 27, 2012 12:08 PM
To: Goldstein, Lee; Narowski, John; Ramsey, Jeff; Slesar, Chris
Cc: Magnan, Steph; Spencer, Lisa
Subject: Environmental Request NOTIFICATION: CHELSEA BHF 0169(9)

Please do not reply to this email.

NOTIFICATION EMAIL

The following Environmental\Hydraulic Request has been successfully submitted:

Date Requested: Mar 27 2012 12:07PM
Project Request Type: Capital Program
Pin: 12C150

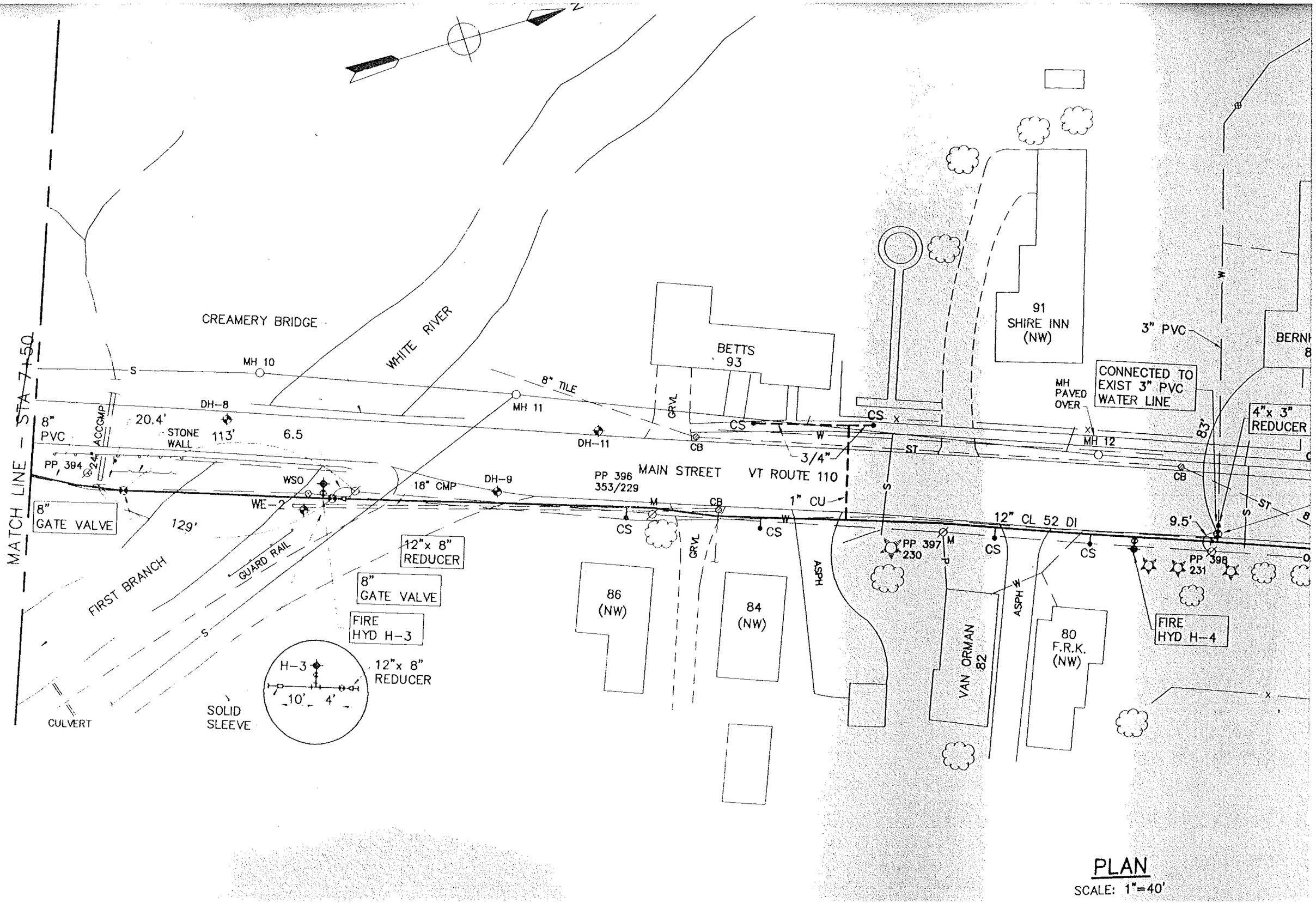

PLAN

SCALE: 1"=40'

PLAN

SCALE: 1"=40'

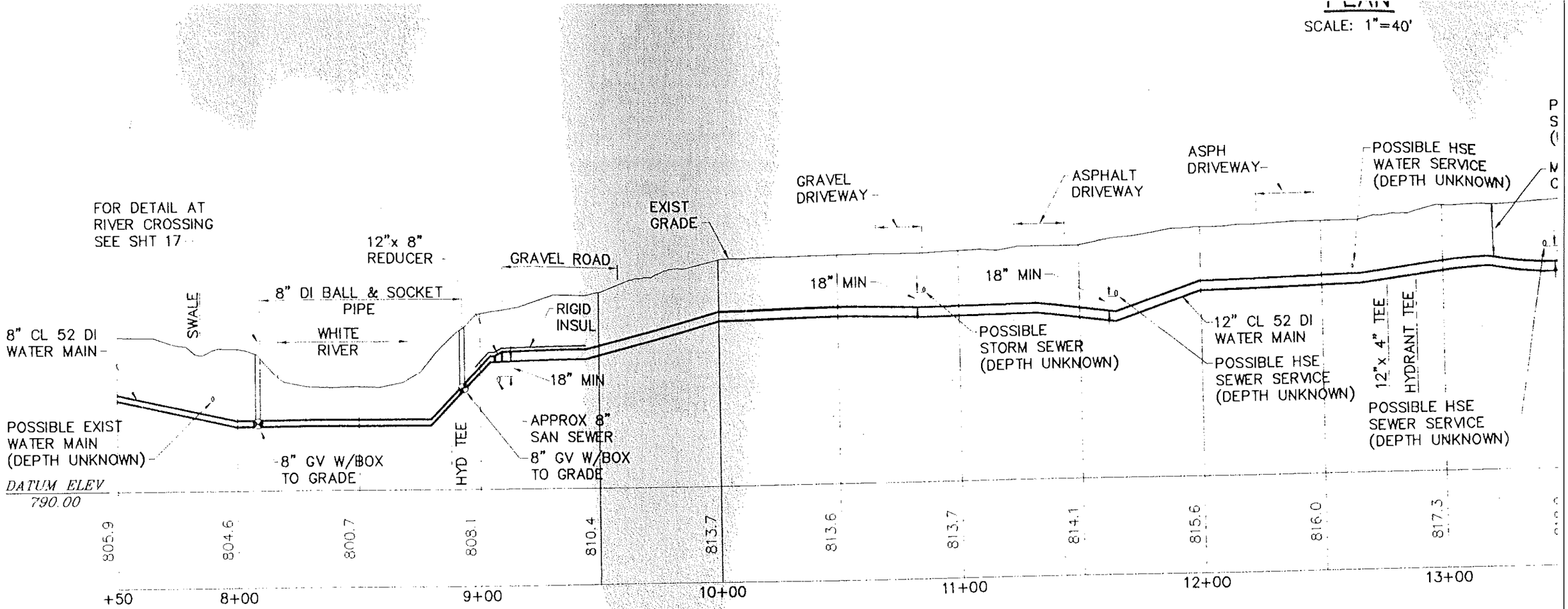

WATER MAIN PROFILE

SCALE: 1"=40' H
1"=10' V

PROFILE NOT CORRECTED TO SHOW AS-BUILT INFO

VERMONT AGENCY OF TRANSPORTATION	ORIGINAL POLICY ADOPTED 11/22/2002	ORIGINAL POLICY IDENTIFIER 6013
POLICY MANUAL	EFFECTIVE DATE 12/6/2007	IDENTIFIER 6013.1
	RESPONSIBLE SECTION DR	SUPERSEDES N/A
SUBJECT: Enhancements to Transportation Projects	SCREEN/PAGE: 1 of 7	

STATUTORY REFERENCE/OTHER AUTHORITY: Safe, Accountable, Flexible, Efficient Transportation Equity Act: A Legacy for Users (SAFETEA-LU), as amended.

APPROVAL DATE: December 6, 2007

APPROVED BY: Neale F. Lunderville, Secretary of Transportation

PURPOSE/COMMENT: To establish Agency of Transportation policy on enhancements to transportation projects.

POLICY STATEMENT: This policy defines the use limits of VTrans-administered funds (including both state and federal non-earmark funds) to support enhancements or amenities to transportation projects. The policy applies to projects administered or developed by VTrans, as well as municipal projects administered under a cooperative agreement between VTrans and the municipality. This policy is part of VTrans' effort to conserve funding and resources for preservation of transportation facilities in keeping with "Road to Affordability" priories.

1. Q. What are VTrans' priorities under the "Road to Affordability" as they pertain to enhancements and amenities?

A. Under the "Road to Affordability," VTrans will give priority to projects that:

- Preserve the functionality of existing transportation infrastructure;
- Minimize the need to acquire additional rights-of-way;
- Minimize the need for utility adjustments;
- Minimize impacts on environmental and historic resources;
- Incorporate designs which provide safe and efficient transportation;
- Promote economic opportunities for Vermonters;
- Foster the best use of the state's natural and economic resources consistent with the planning goals listed in 24 V.S.A. § 4302 as amended by Act No. 200 of the Acts of the 1987 Adj. Sess. (1988) and Act No. 115 of the Acts of the 2003 Adj. Sess. (2004); and
- Give appropriate consideration of local, regional and state agency plans.

2. Q. How will VTrans determine what elements are included in a project's scope?

A. To accomplish the goals of the "Road to Affordability" initiative, VTrans will financially support (with state and federal non-earmark transportation funds allocated to Vermont) only project elements that are functionally necessary to carry out the core purpose of a transportation project. Municipalities can add elements to a project as long as the municipality

is willing to pay for their cost. See question 10 for details about adding elements to a project.

3. Q. What is meant by "functional necessity?"

A. "Functional necessity" means features, components, elements, or materials of a transportation project that are required by:

- State or federal law;
- Permit requirements;
- The "Vermont State Standards for the Design of Transportation Construction, Reconstruction and Rehabilitation on Freeways, Roads, and Streets;"
- Other adopted Vermont state design policies and manuals;
- Vermont Standard Construction Drawings; and
- Other applicable industry standard design manuals that are essential to safely construct, operate, and maintain the project.

These items are essential to the performance and integrity of the roadway or structure in question, and should result in the lowest life-cycle cost of the project.

4. Q. How is "functional necessity" analyzed when there is a specific goal or purpose associated with earmarked funds?

A. Work elements needed to accomplish the specific goals or purposes for which specific federal (usually termed "earmarks") or state funds have been granted are considered to be functionally necessary only if that work is required by one or more of the above-noted documents, or if the project elements are part of the core project.

5. Q. What is the "core project"?

A. The "core project" means those features or elements of a project that are:

- Functionally necessary;
- Preexist the current project and/or are subject to a preexisting finance and maintenance agreement between VTrans and a municipality; and
- Need to be disturbed as a result of the project.

Generally for roadways, the core dimensions are the "curb-to-curb" or "ditch-to-ditch" width of the existing roadway. For bridges, this width is generally the width of the deck and the existing width of the pavement and shoulders on the roadway approaches. The core of a project also extends vertically downward to the extent of any excavation required for construction of the pavement and drainage structure, or upward to accommodate traffic signals, signs, and clearance of overpasses.

Features required by state or federal permits and/or mitigation required by a federal environmental document also are considered to be part of the core project, even though they may be physically outside the boundaries of the "curb-to-curb" or "ditch-to-ditch" limits. Features or components added to the project to comply with state law, federal law, grant approvals (in the case of earmarked projects), or updates in design standards or procedures (for example, ADA compliance) are considered part of the core project.

6. Q. Are elements such as benches, undergrounding of utilities, landscaping, ornamental lighting, ornamental fences, etc. considered functionally necessary?

A. These elements generally are not considered functionally necessary. However, these elements could be considered core to a project or functionally necessary if they are specified in the language of an earmark.

7. Q. Are pedestrian and bicycle facilities considered to be functionally necessary?

A. In keeping with the VTrans Policies on Pedestrians and Bicycles, appropriate accommodation of pedestrians and bicycles will be incorporated into all transportation projects. Appropriateness will be determined by the VTrans Project Manager in consultation with his/her Program Manager and the VTrans Bicycle and Pedestrian and Safe Routes to Schools Managers.

8. Q. Who makes the determinations of functional necessity or core project?

A. Determinations as to functional necessity and core project are the responsibility of the VTrans project manager.

9. Q. Is there a process for reviewing such determinations?

A. A municipality can request that a project manager's determination be reviewed by the VTrans program manager. A municipality can request further review by the Secretary of Transportation, whose determination is final.

10. Q. What if a municipality wishes to incorporate non-functional or non-core elements to a VTrans project?

A. If a municipality desires to have elements included in a project that are not determined to be functionally necessary, it can do so as non-participating costs if the municipality agrees by a Finance and Maintenance Agreement to fund 100 percent of the construction cost of those items as well as agree to maintain those items with 100 percent locally secured funds. However, for new projects or projects in the early design stage, VTrans must be notified of the municipality's desire to include additional elements no later than the Conceptual Design phase of project development. Once notified, the VTrans project manager will arrange for development of a Finance and Maintenance Agreement or an amendment to an existing Finance and Maintenance Agreement which will be sent to the municipality for review, approval and execution before VTrans moves forward with inclusion of the additional elements. The estimated costs of these elements will be included in the project's estimated costs for determining a project's benefit/cost ratio in the VTrans project prioritization system.

For projects currently in the design process or "pipeline" that have attained the level of accepted/approved "Preliminary Plans," the project manager will review the most current plan for consistency with this policy's definitions of Core Project and Functional Necessity. Those features determined by the project manager to be inconsistent with those definitions will be incorporated into a detailed listing. This listing will then be reviewed with VTrans' Program Management before being reviewed with appropriate municipal officials and before VTrans determines which features no longer will be eligible for VTrans' financial support.

After this review, VTrans may elect to continue its financial support for some items or elements that might otherwise be considered functionally unnecessary had the project not already been in the "pipeline." In these cases, the Agency's financial support will continue through

construction only if the municipality agrees to pay for the amenity's future maintenance and/or replacement.

Those features which remain a part of the project either with VTrans financial support or at 100 percent municipal cost will be specifically listed in the Finance and Maintenance Agreement by amendment subsequent to the joint VTrans/municipal review as either financially supported by VTrans and maintained by the municipality or financially supported and maintained by the municipality.

The Finance and Maintenance Agreement will be modified subsequent to the joint VTrans/municipal review to include a provision that specifically indicates that non-functionally necessary or non-core project elements will be maintained for their useful life by the municipality at 100 percent municipal cost. Further project development will be suspended until the Finance and Maintenance Agreement is signed by the municipality.

11. Q. What does "financial support" mean?

A. "Financial support" means payment with non-earmarked funds. Earmarks are made by either the U.S. Congress or the Vermont State Legislature specifically for an amenity or enhancement. The Vermont Legislature simply including funding for a project in the annual Transportation Bill or Budget Adjustment Bill is not considered an earmark unless the legislation specifically specifies that the amenity or enhancement must be included in the overall project appropriation.

12. Q. Will inclusion of non-functional or non-core elements have an effect on a project's priority in the VTrans' prioritization systems?

A. The estimated costs of the non-functional or non-core elements that might remain in a project financially supported by VTrans will be included in the project's estimated costs for determining a project's benefit/cost ratio. Such inclusion could lower a project's priority.

The estimated costs of non-functional or non-core elements that will be borne entirely by the municipality will not be included in the project's estimated costs for determining a projects benefit/cost ratio in the VTrans project prioritization system. Excluding these costs will raise the project's benefit/cost ratio and could raise a project's priority.

13. Q. What is the effect of element inclusion in the Finance and Maintenance Agreement?

A. Upon inclusion in the Finance and Maintenance Agreement, only those elements specifically listed will be eligible for VTrans financial support. The assumed cost of these elements will also be included in the project's estimated cost for determining a project's benefit/cost ratio or cost in the VTrans Project Prioritization systems.

Additional non-functional or non-core elements that are subsequently desired by the municipality will only be included in a project if the municipality agrees to pay for the construction, maintenance and replacement of the elements.

14. Q. How does this policy relate to VTrans' Project Definition Team (PDT)?

A. Projects which have not advanced to the accepted/approved Preliminary Plans at the time of adoption of this policy - including projects that have been processed through the PDT - will be reviewed by the VTrans project manager who will determine the functional necessity and core project elements for the project. The project manager will notify the municipality in which the project is located about his/her determination and how that determination limits financial support. The project manager will inquire about the municipality's desire and ability to pay for and maintain work elements not determined to be functionally necessary. Finance and Maintenance Agreements will be appropriately modified to reflect the municipality's decision.

The project manager will also advise the municipality as to those projects that are to be scheduled for PDT review. The PDT process will be bound by this policy. Any amenities or enhancements that are deemed functionally unnecessary or not part of the core project are subject to the same financial constraints as any other VTrans project. The PDT has no authority to make its own financial decisions.

15. Q. How does this policy affect the freestanding Enhancement Program?

A. This policy does not affect the freestanding Transportation Enhancement Grant Program described in 19 V.S.A. § 38.

POLICY HISTORY

ORIGINAL POLICY ADOPTION DATE: 11/22/2002

REVISION NO: 1	**EFFECTIVE DATE:** 12/06/2007	**REASON: Affordability/Funding shortfall**
REVISION NO:	**EFFECTIVE DATE:** __/__/____	**REASON:**
REVISION NO:	**EFFECTIVE DATE:** __/__/____	**REASON:**
REVISION NO:	**EFFECTIVE DATE:** __/__/____	**REASON:**

Policy Home Page

Vermont Agency of Transportation

General Yearly Summaries - Crash Listing: State Highways and All Federal Aid Highway Systems

From 01/01/08 To 12/31/12 General Yearly Summaries Information

*	Reporting Agency/ Number	Town	Mile Marker	Date MM/DD/YY	Time	Weather	Contributing Circumstances	Direction Of Collision	Number Of Injuries	Number Of Fatalities	Number Of Untimely Deaths	Direction	Road Group
Route: VT-109 Continued ...													
	VTVSP0100/12A102094	Belvidere	0.8	06/09/2012	18:30	Clear	Driving too fast for conditions	Single Vehicle Crash	1	0	0	E	SH
	VTVSP0100/08A105396	Belvidere	2.25	12/01/2008	08:29	Cloudy	Driving too fast for conditions	Single Vehicle Crash	0	0	0	E	SH
	VTVSP0100/08A103857	Belvidere	4.21	08/24/2008	20:29	Clear	Failure to keep in proper lane	Single Vehicle Crash	0	0	0	N	SH
Route: VT-110													
	VTVSP1100/12D304130	Royalton	0.02	09/15/2012	17:01	Clear	Operating vehicle in erratic, reckless, careless, negligent, or aggressive manner, No improper driving	Same Direction Sideswipe	0	0	0	N	SH
	VTVSP1100/09D301439	Royalton	0.14	05/01/2009	14:59	Clear	Inattention, Followed too closely, No improper driving	Rear End	1	0	0	N	SH
	VTVSP1100/10D304005	Royalton	0.42	10/23/2010	16:17	Clear	No improper driving, Failed to yield right of way, Made an improper turn	Left Turn and Thru, Angle Broadside -->v--	1	1	0		SH
	VT0141100/12RY00920	Royalton	0.7	08/24/2012	19:03	Clear	Unknown	Single Vehicle Crash	1	0	0	E	SH
	VT0141100/11RY01083	Royalton	0.78	12/04/2011	08:30	Clear	Driving too fast for conditions	Single Vehicle Crash	0	0	0	N	SH
	VT0141100/10RY00010	Royalton	1.42	04/03/2010	19:30	Clear	Swerving or avoiding due to wind, slippery surface, vehicle, object, non-motorist in roadway etc	Single Vehicle Crash	1	0	0	N	SH
	VTVSP1100/10D304655	Royalton	1.59	12/12/2010	14:18	Snow	Failure to keep in proper lane	Single Vehicle Crash	0	0	0	N	SH
	VT0141100/08RY00026	Royalton	1.62	03/06/2008	11:45	Unknown	Unknown	Single Vehicle Crash	0	0	0	N	SH
	VTVSP1100/09D300287	Tunbridge	0.24	01/22/2009	19:07	Clear	Failure to keep in proper lane, Under the influence of medication/drugs/alcohol	Single Vehicle Crash	0	0	0	S	SH
	VTVSP1100/10D304629	Tunbridge	0.7	12/11/2010	01:13	Cloudy	Failure to keep in proper lane	Single Vehicle Crash	1	0	0	N	SH
	VTVSP1100/11D300129	Tunbridge	0.72	01/09/2011	09:00	Cloudy	Driving too fast for conditions	Single Vehicle Crash	0	0	0	N	SH
	VTVSP1100/08D302580	Tunbridge	1.12	06/25/2008	09:10	Clear	Failure to keep in proper lane	Head On	1	0	0	N	SH
	VTVSP1100/09D304050	Tunbridge	1.4	11/12/2009	10:34	Clear	Made an improper turn, No improper driving	Left Turn and Thru, Angle Broadside -->v--	0	0	0		SH
	VTVSP1100/08D303433	Tunbridge	1.45	08/21/2008	17:46	Clear		Head On	0	0	0	E	SH
	VT0090000/10ORC1654	Tunbridge	2.55	09/17/2010	17:10	Clear	Distracted, No improper driving	Rear End	0	0	0	S	SH
	VTVSP1100/08D300884	Tunbridge	3.89	02/21/2008	06:55	Clear	Driving too fast for conditions	Single Vehicle Crash	0	0	0	S	SH
	VTVSP1100/08D301886	Tunbridge	4.48	05/04/2008	21:53	Clear	Failure to keep in proper lane, Under the influence of medication/drugs/alcohol	Single Vehicle Crash	2	0	0		SH
	VTVSP1100/12D303959	Tunbridge	4.59	09/06/2012	08:16	Clear	Failure to keep in proper lane, Inattention	Single Vehicle Crash	0	0	0	N	SH
	VTVSP1100/12D304530	Tunbridge	4.72	10/09/2012	17:29	Cloudy	No improper driving, Operating defective equipment, Failure to keep in proper lane	Head On	3	0	0	N	SH
	VTVSP1100/09D302150	Tunbridge	6.33	06/25/2009	16:07	Clear	Failed to yield right of way, Inattention, No improper driving	Left Turn and Thru, Angle Broadside -->v--	1	1	0	N	SH
	VTVSP1100/09D300728	Tunbridge	7.58	02/26/2009	20:31	Clear	Driving too fast for conditions	Single Vehicle Crash	1	0	0	N	SH
	VTVSP1100/11D300596	Tunbridge	7.7	02/07/2011	15:18	Cloudy		Single Vehicle Crash	0	0	0	S	SH
	VTVSP1100/08D304107	Chelsea	0.78	10/13/2008	15:11	Clear	Failed to yield right of way, No improper driving	Other - Explain in Narrative	1	0	0	N	SH
	VTVSP1100/09D301173	Chelsea	3	04/07/2009	08:15	Rain	No improper driving, Made an improper turn	Left Turn and Thru, Broadside v<--	0	0	0	N	SH

**Crash occurred prior to the last Highway Improvement Project. This data should not be used in a crash analysis. UNK indicates the Mile Marker is Unknown.*

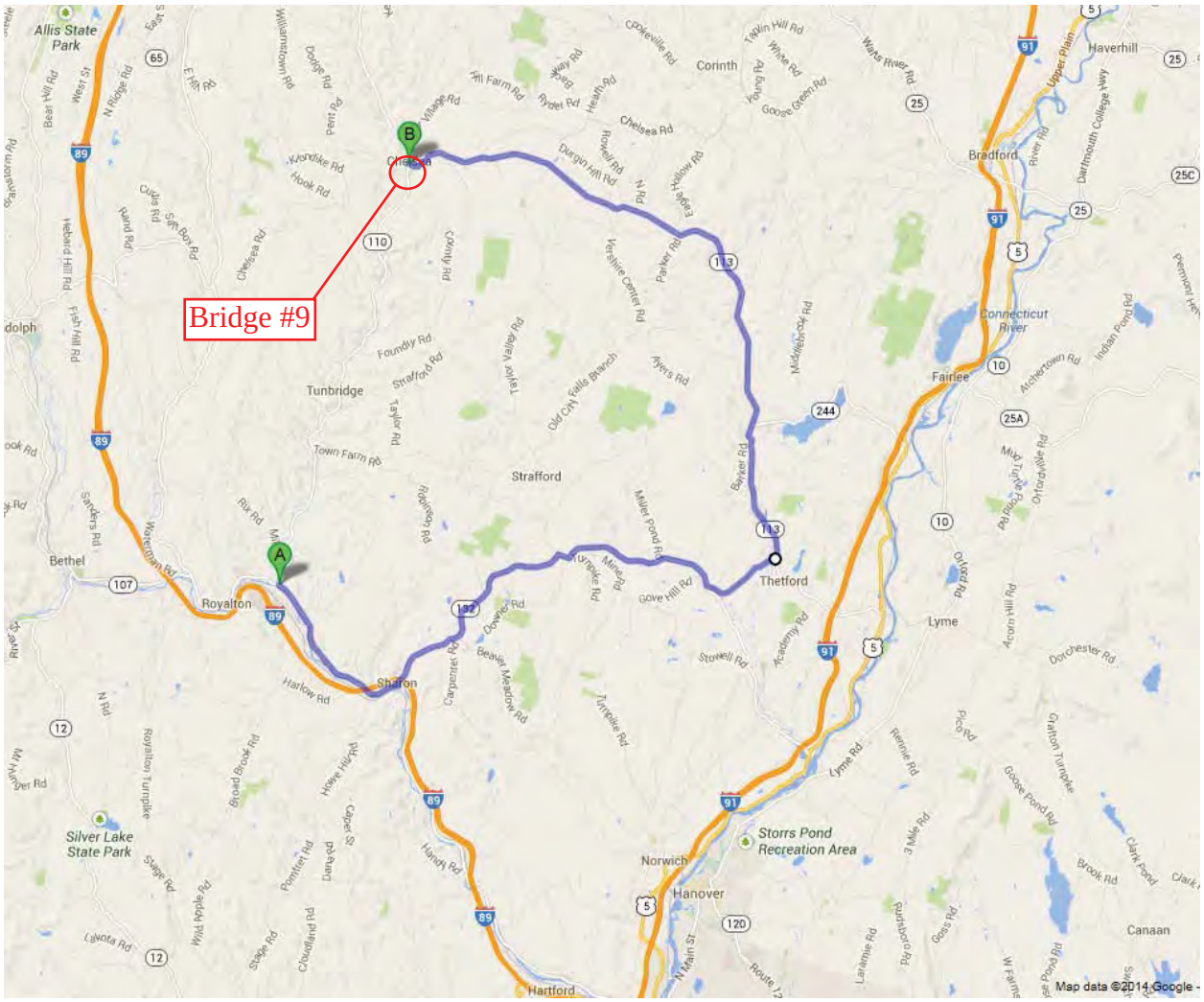

Detour Route – VT 110 to VT 14 to VT 132 to Tucker Rd to VT 113 to VT 110

A to B on Through Route: 13.2 Miles (about 18 minutes)
A to B on Detour Route: 37.1 Miles (about 61 minutes)
Added Miles: 23.9 Miles (about 43 minutes)
End to End Distance: 50.2 Miles (about 79 minutes)

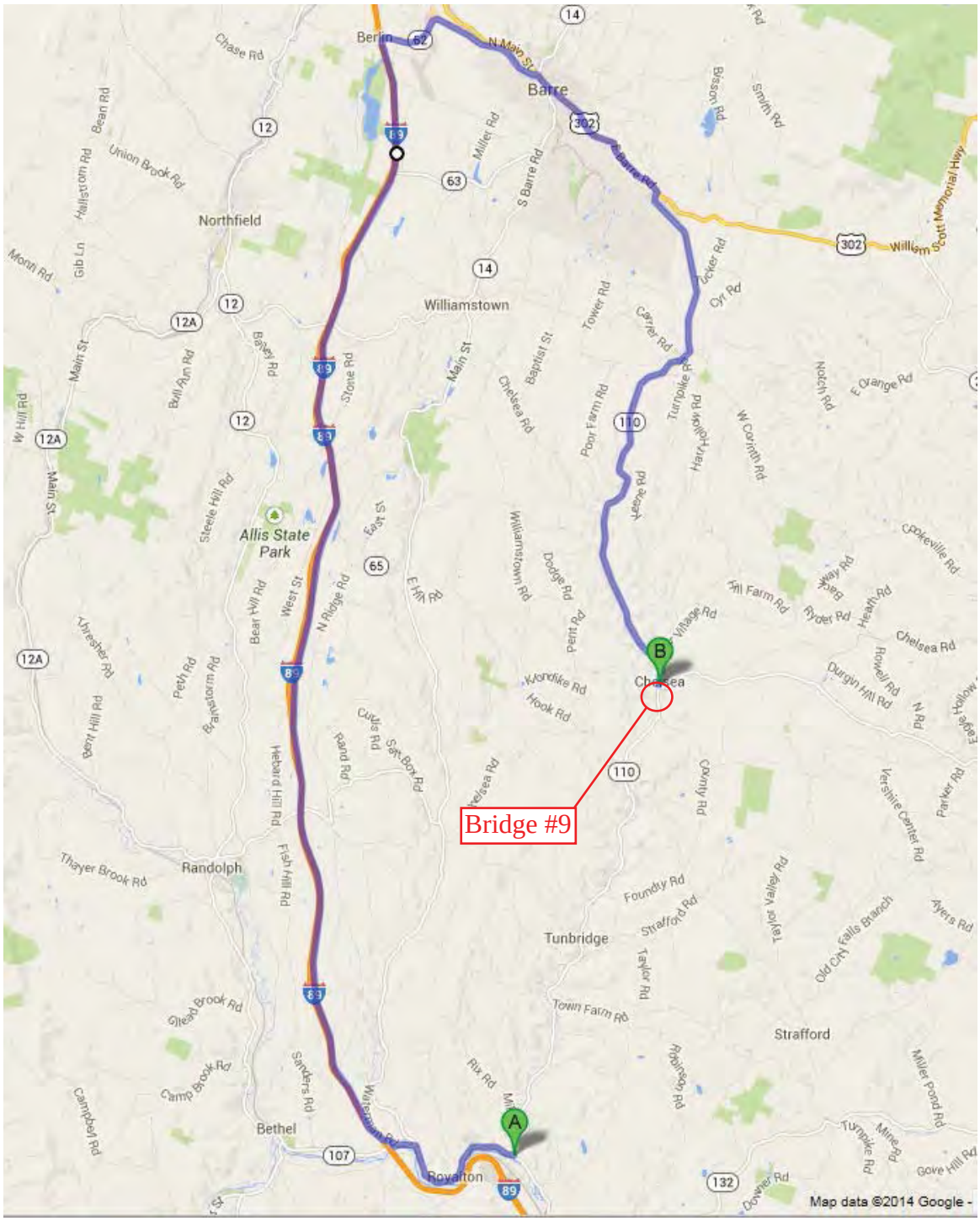

Detour Route – VT 110 to VT 14 to VT 107 to I 89 to VT 62 to US 302 to VT 110

A to B on Through Route: 13.2 Miles (about 18 minutes)
A to B on Detour Route: 54.9 Miles (about 65 minutes)
Added Miles: 41.7 Miles (about 47 minutes)
End to End Distance: 68.1 Miles (about 83 minutes)

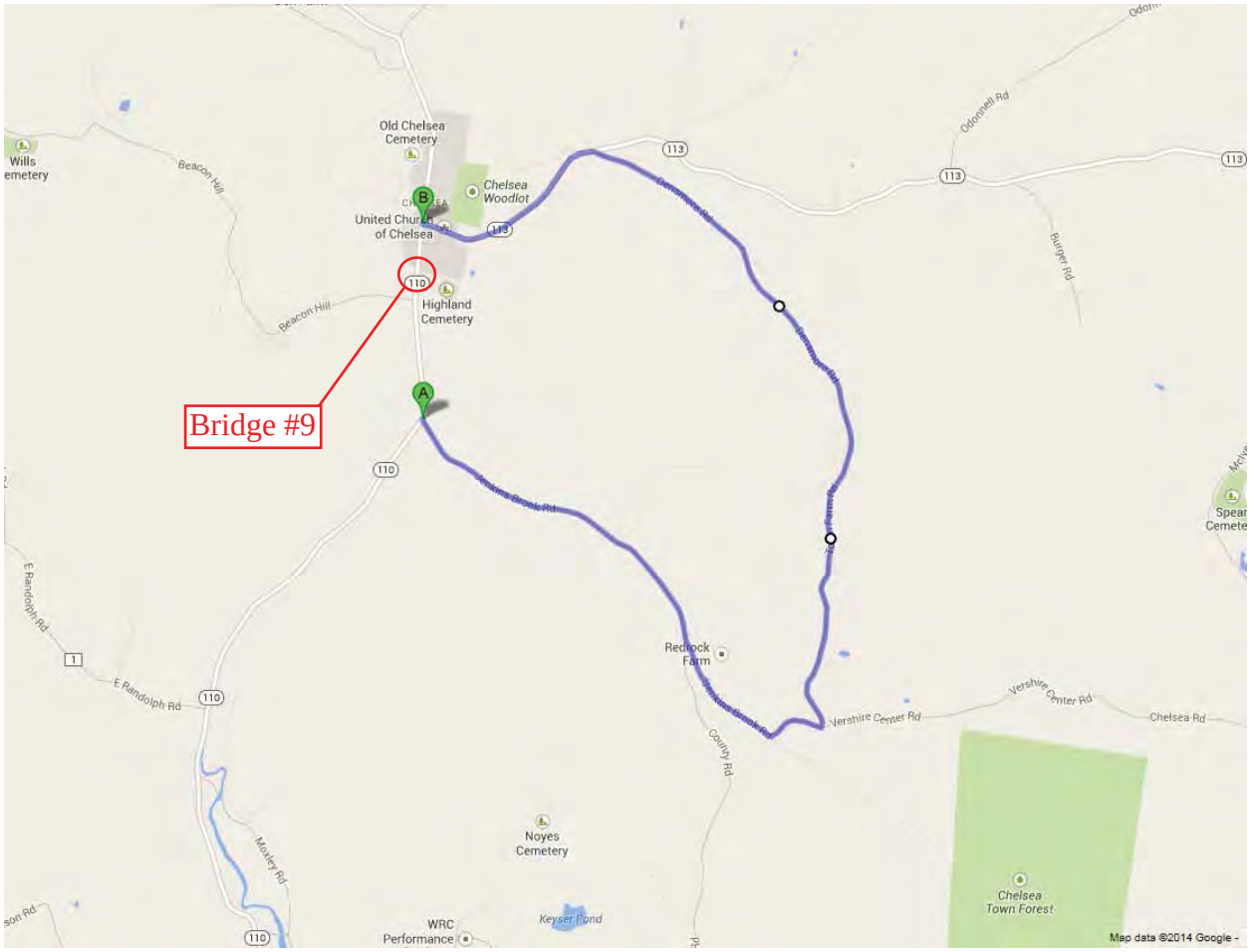

<u>Local Bypass Route</u> – VT 110 to Jenkins Brook Rd to Vershire Center Rd to Town Farm Rd to Densmore Rd to VT 113 to VT 110

A to B on Through Route: 0.8 Miles (about 1 minute)
A to B on Bypass Route: 5.6 Miles (about 13 minutes)
Added Miles: 4.8 Miles (about 12 minutes)
End to End Distance: 6.4 Miles (about 14 minutes)

EXISTING CONDITIONS

SCALE 1" = 20'-0"
20 0 20

PROJECT NAME: CHELSEA	
PROJECT NUMBER: BHF 0169(9)	
FILE NAME: s12c150bdr.dgn	PLOT DATE: 14-APR-2014
PROJECT LEADER: C.P.WILLIAMS	DRAWN BY: D.D.BEARD
DESIGNED BY: ------	CHECKED BY: ------
EXISTING CONDITIONS	SHEET 1 OF 14

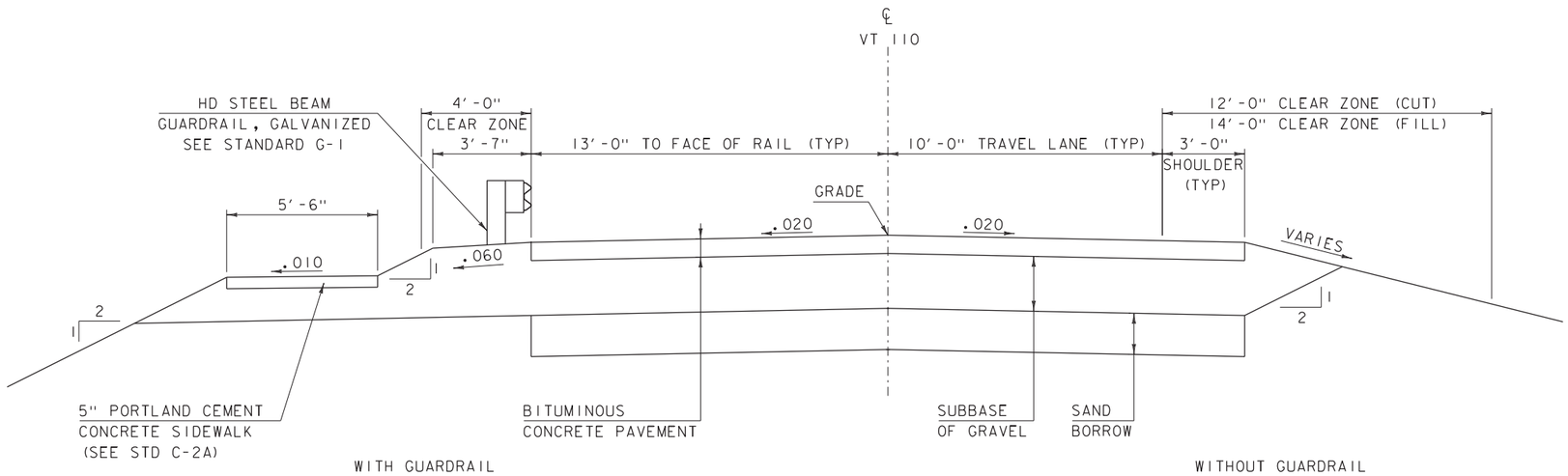

VT ROUTE 110 TYPICAL ROADWAY SECTION

SCALE 3/8" = 1'-0"

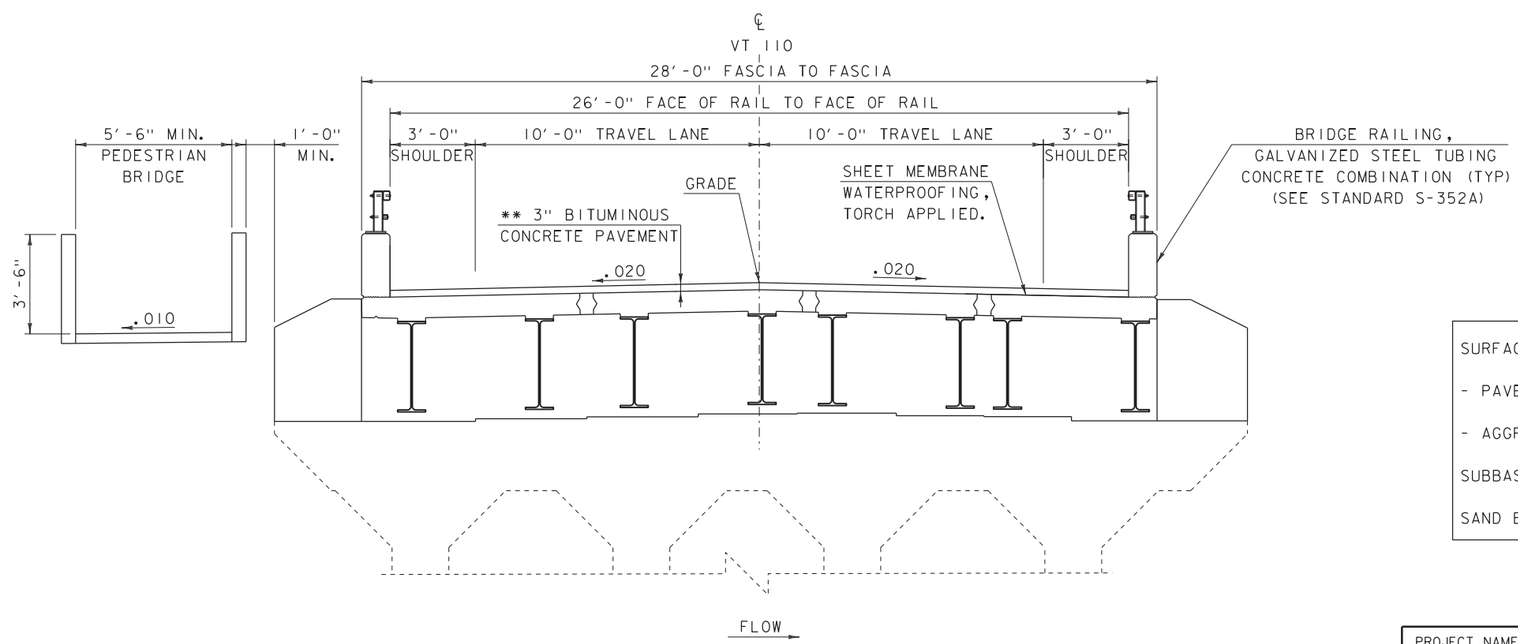

PROPOSED BRIDGE TYPICAL SECTION (ALT 1&2)

SCALE 3/8" = 1'-0"

MATERIAL TOLERANCES

(IF USED ON PROJECT)

SURFACE	
- PAVEMENT (TOTAL THICKNESS)	+/- 1/4"
- AGGREGATE SURFACE COURSE	+/- 1/2"
SUBBASE	+/- 1"
SAND BORROW	+/- 1"

PROJECT NAME: CHELSEA
PROJECT NUMBER: BHF 0169(9)

FILE NAME: 12c150/s12c150typical.dgn
PROJECT LEADER: C.P.WILLIAMS
DESIGNED BY: ------
ALTERNATIVES 1&2 TYPICAL SECTIONS

PLOT DATE: 14-APR-2014
DRAWN BY: L.E.GALIHER
CHECKED BY: D.D.BEARD
SHEET 2 OF 14

BEGIN APPROACH
STA 143+00.00

PC
STA 143+19.26

BEGIN PROJECT
STA 144+00.00

PRC
STA 144+26.31

PI #2
STA 144+79.84 AHD=
STA 144+79.83 BK

PROPOSED
RETAINING WALL

BEGIN BRIDGE
STA 145+34.70

END BRIDGE
STA 146+16.70

PI #3
STA 146+70.27 AHD =
STA 146+70.27 BK

END PROJECT
STA 147+50.00

ESTIMATED
PROJECT LIMITS

PT
STA 148+30.85

END APPROACH
STA 148+50.00

VT 110
TO TUNBRIDGE

VT 110
TO WASHINGTON

143+00 144+00 145+00 146+00 147+00 148+00

60+00 61+00 62+00

PI #1
STA 143+72.79 AHD=
STA 143+72.78 BK

ESTIMATED
PROJECT LIMITS

EXISTING
ALIGNMENT

PT
STA 145+33.36

PC
STA 146+16.75

PRC
STA 147+23.80

PI #4
STA 147+77.32 AHD=
STA 147+77.32 BK

1ST BRANCH WHITE RIVER
FLOW

TH 77

CURVE (1)
DELTA = 1°04′14″
D = 1°00′00″
R = 5729.58′
T = 53.53′
L = 107.05′
E = 0.25′

CURVE (2)
DELTA = 1°04′14″
D = 1°00′00″
R = 5729.58′
T = 53.53′
L = 107.05′
E = 0.25′

CURVE (3)
DELTA = 1°04′14″
D = 1°00′00″
R = 5729.58′
T = 53.53′
L = 107.05′
E = 0.25′

CURVE (4)
DELTA = 1°04′14″
D = 1°00′00″
R = 5729.58′
T = 53.53′
L = 107.05′
E = 0.25′

VT STATE PLANE GRID

LAYOUT (ALTERNATIVES 1&2)

SCALE 1" = 20′-0"
20 0 20

PROJECT NAME: CHELSEA	
PROJECT NUMBER: BHF 0169(9)	
FILE NAME: s12c150bdr.dgn	PLOT DATE: 14-APR-2014
PROJECT LEADER: C.P.WILLIAMS	DRAWN BY: D.D.BEARD
DESIGNED BY: ------	CHECKED BY: ------
LAYOUT SHEET	SHEET 3 OF 14

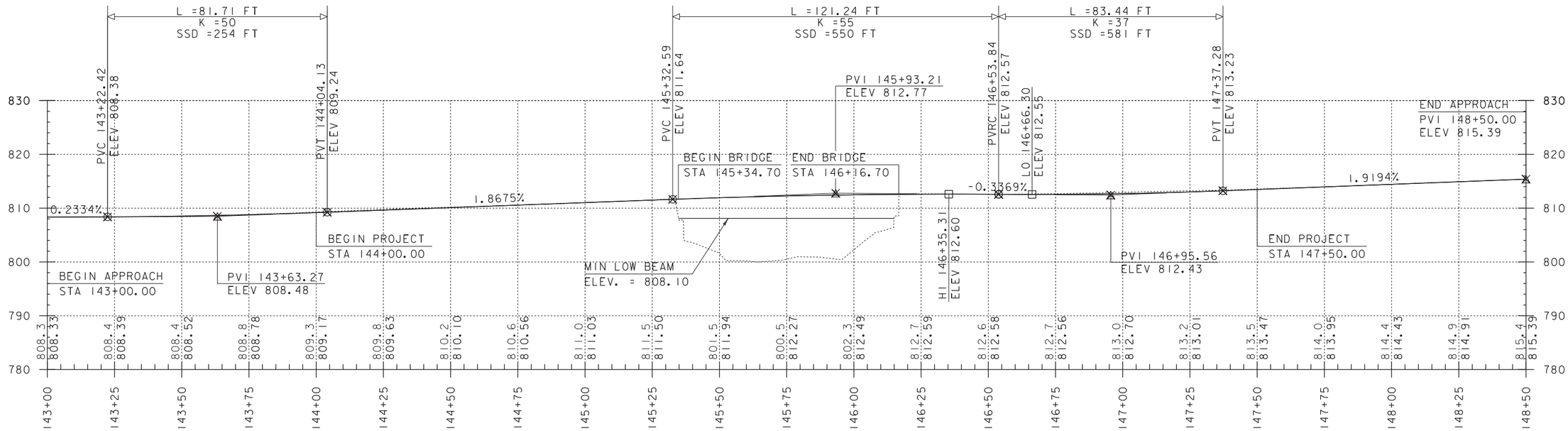

VT RT 110 PROFILE
(ALTERNATIVES #1 & #2)

SCALE: HORIZONTAL 1"=20'
VERTICAL 1"=10'

NOTE:

GRADES SHOWN TO THE NEAREST TENTH ARE EXISTING GROUND ALONG ℄

GRADES SHOWN TO THE NEAREST HUNDREDTH ARE FINISH GRADE ALONG ℄

PROJECT NAME: CHELSEA	
PROJECT NUMBER: BHF 0169(9)	
FILE NAME: s12c150profile.dgn	PLOT DATE: 14-APR-2014
PROJECT LEADER: C.P.WILLIAMS	DRAWN BY: D.D.BEARD
DESIGNED BY: ------	CHECKED BY: ------
PROFILE SHEET	SHEET 4 OF 14

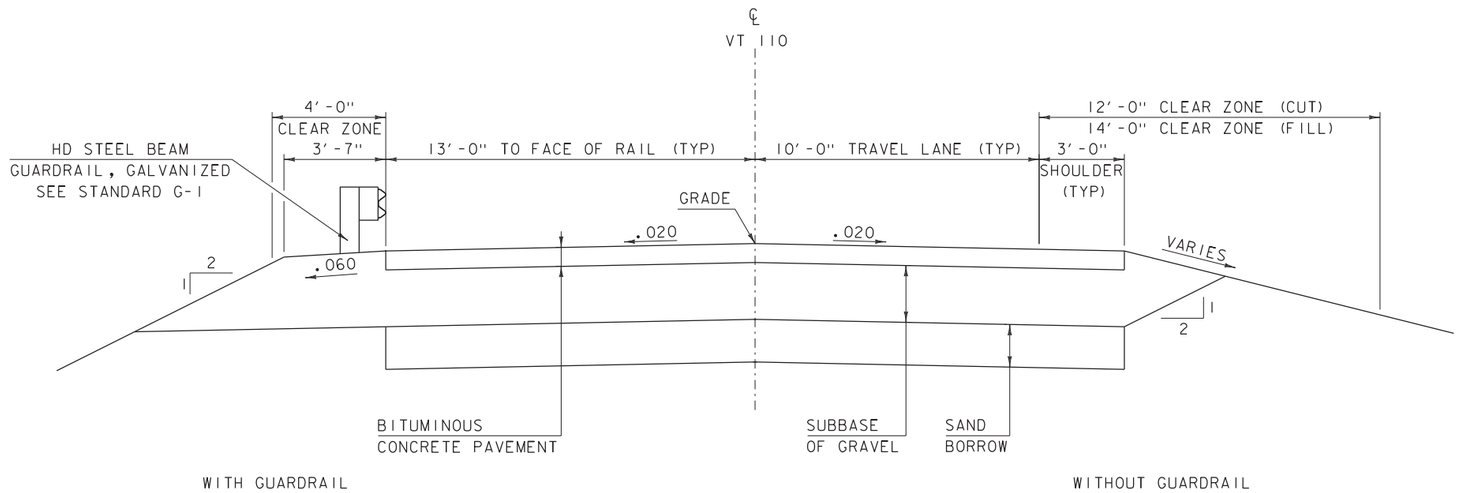

VT ROUTE 110 TYPICAL ROADWAY SECTION

SCALE 3/8" = 1'-0"

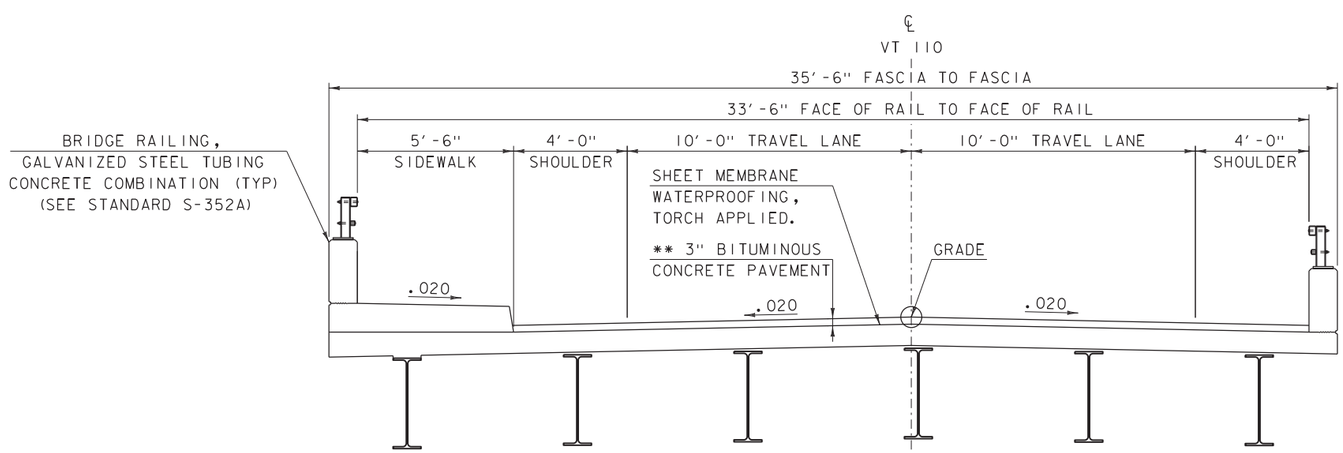

FLOW →

PROPOSED BRIDGE TYPICAL SECTION (ALT 3&4)

SCALE 3/8" = 1'-0"

MATERIAL TOLERANCES

(IF USED ON PROJECT)

SURFACE	
- PAVEMENT (TOTAL THICKNESS)	+/- 1/4"
- AGGREGATE SURFACE COURSE	+/- 1/2"
SUBBASE	+/- 1"
SAND BORROW	+/- 1"

PROJECT NAME: CHELSEA
PROJECT NUMBER: BHF 0169(9)

FILE NAME: 12c150/s12c150typical.dgn
PROJECT LEADER: C.P.WILLIAMS
DESIGNED BY: ------
ALTERNATIVE 3 TYPICAL SECTIONS

PLOT DATE: 14-APR-2014
DRAWN BY: L.E.GALIHER
CHECKED BY: D.D.BEARD
SHEET 5 OF 14

BEGIN PROJECT
STA 144+50.00

BEGIN BRIDGE
STA 145+32.70

END BRIDGE
STA 146+14.75

END PROJECT
STA 146+50.00

END APPROACH
STA 147+00.00

BEGIN APPROACH
STA 144+00.00

ESTIMATED
PROJECT LIMITS

ESTIMATED
PROJECT LIMITS

VT 110
TO TUNBRIDGE

VT 110
TO WASHINGTON

143+00 144+00 145+00 146+00 147+00 148+00

50+00 51+00 52+00

1ST BRANCH WHITE RIVER
FLOW

TH 77

VT STATE PLANE GRID

N

LAYOUT (ALTERNATIVE 3)

SCALE 1" = 20'-0"
20 0 20

PROJECT NAME: CHELSEA	
PROJECT NUMBER: BHF 0169(9)	
FILE NAME: sl2cl50bdr.dgn	PLOT DATE: 14-APR-2014
PROJECT LEADER: C.P.WILLIAMS	DRAWN BY: D.D.BEARD
DESIGNED BY: ------	CHECKED BY: ------
LAYOUT SHEET	SHEET 6 OF 14

BEGIN PROJECT
STA 144+50.00

BEGIN BRIDGE
STA 145+22.50

END BRIDGE
STA 146+22.50

END PROJECT
STA 146+50.00

END APPROACH
STA 147+00.00

BEGIN APPROACH
STA 144+00.00

ESTIMATED
PROJECT LIMITS

ESTIMATED
PROJECT LIMITS

VT 110
TO TUNBRIDGE

VT 110
TO WASHINGTON

143+00 144+00 145+00 146+00 147+00 148+00

50+00 51+00 52+00

1ST BRANCH WHITE RIVER

TH 77

VT STATE PLANE GRID

N

LAYOUT (ALTERNATIVE 4)

SCALE 1" = 20'-0"
20 0 20

PROJECT NAME: CHELSEA	
PROJECT NUMBER: BHF 0169(9)	
FILE NAME: s12c150bdr.dgn	PLOT DATE: 14-APR-2014
PROJECT LEADER: C.P.WILLIAMS	DRAWN BY: D.D.BEARD
DESIGNED BY: ------	CHECKED BY: ------
LAYOUT SHEET	SHEET 8 OF 14

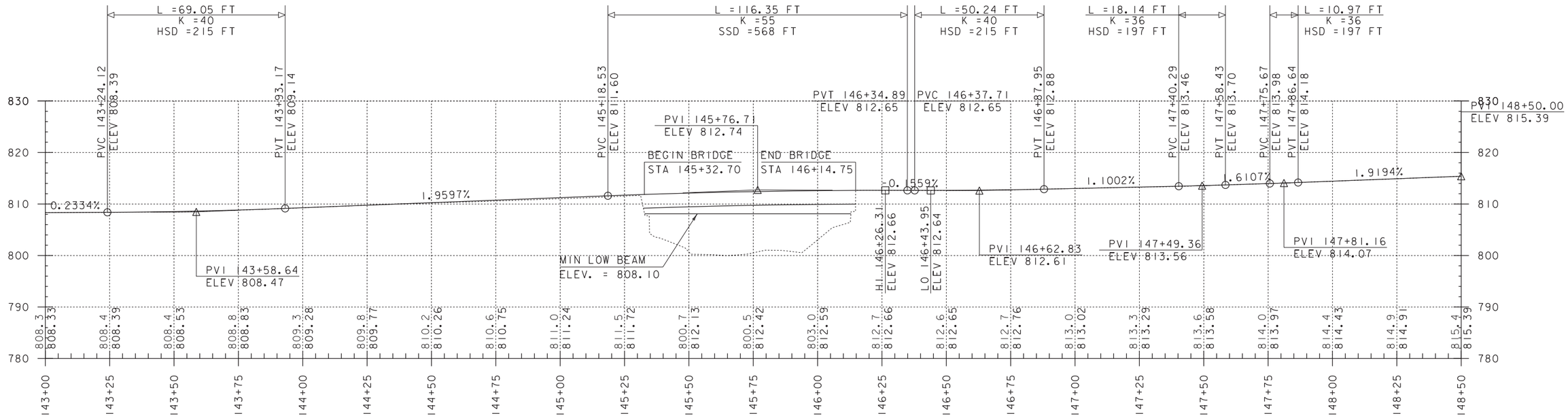

VT RT 110 PROFILE
(ALTERNATIVE #3)

SCALE: HORIZONTAL 1"=20'
VERTICAL 1"=10'

NOTE:

GRADES SHOWN TO THE NEAREST TENTH ARE EXISTING GROUND ALONG ℄

GRADES SHOWN TO THE NEAREST HUNDREDTH ARE FINISH GRADE ALONG ℄

PROJECT NAME: CHELSEA	
PROJECT NUMBER: BHF 0169(9)	
FILE NAME: s12c150profile.dgn	PLOT DATE: 14-APR-2014
PROJECT LEADER: C.P.WILLIAMS	DRAWN BY: D.D.BEARD
DESIGNED BY: ------	CHECKED BY: ------
PROFILE SHEET	SHEET 7 OF 14

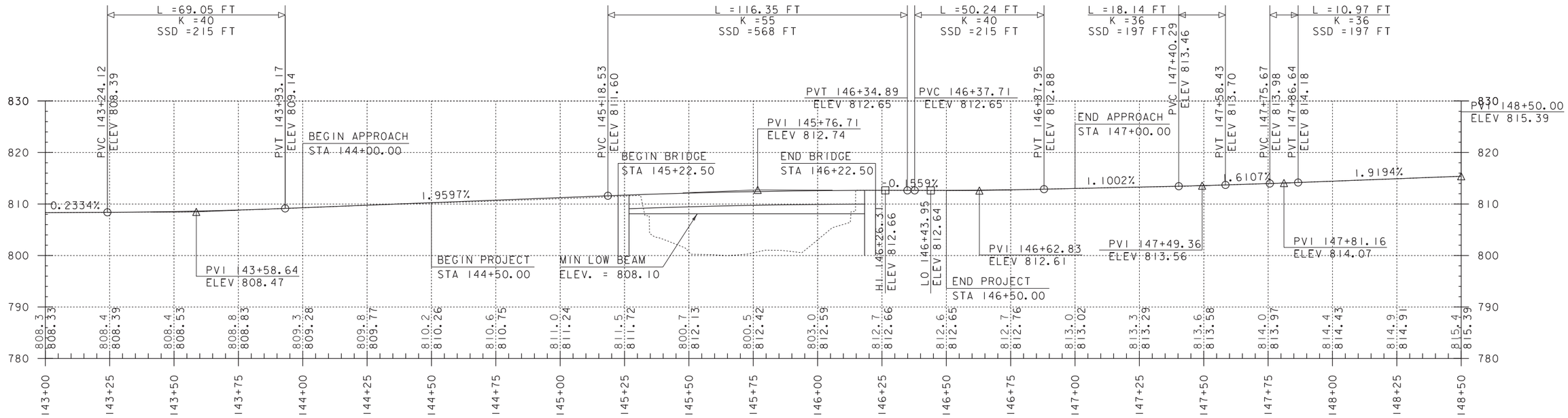

VT RT 110 PROFILE
(ALTERNATIVE #4)

SCALE: HORIZONTAL 1"=20'
VERTICAL 1"=10'

NOTE:

GRADES SHOWN TO THE NEAREST TENTH ARE EXISTING GROUND ALONG ℄

GRADES SHOWN TO THE NEAREST HUNDREDTH ARE FINISH GRADE ALONG ℄

PROJECT NAME: CHELSEA	
PROJECT NUMBER: BHF 0169(9)	
FILE NAME: s12c150profile.dgn	PLOT DATE: 14-APR-2014
PROJECT LEADER: C.P.WILLIAMS	DRAWN BY: D.D.BEARD
DESIGNED BY: ------	CHECKED BY: ------
PROFILE SHEET	SHEET 9 OF 14

ESTIMATED TEMPORARY BRIDGE IMPACT LIMITS

ESTIMATED TEMPORARY BRIDGE IMPACT LIMITS

VT 110 TO TUNBRIDGE

VT 110 TO WASHINGTON

1ST BRANCH WHITE RIVER

FLOW

TH 77

23+00 24+00 25+00 26+00 27+00 28+00 29+00

143+00 144+00 145+00 146+00 147+00 148+00

50+00 51+00 52+00

VT STATE PLANE GRID

N

ONE WAY TEMPORARY BRIDGE LAYOUT

SCALE 1" = 20'-0"

20 0 20

TEMPORARY BRIDGE IS DESIGNED FOR 20 MPH AT A 2% SUPERELEVATION.

PROJECT NAME: CHELSEA	
PROJECT NUMBER: BHF 0169(9)	
FILE NAME: s12c150bdr.dgn	PLOT DATE: 14-APR-2014
PROJECT LEADER: C.P.WILLIAMS	DRAWN BY: D.D.BEARD
DESIGNED BY: ------	CHECKED BY: ------
ONE WAY TEMPORARY BRIDGE LAYOUT SHEET	SHEET 10 OF 14

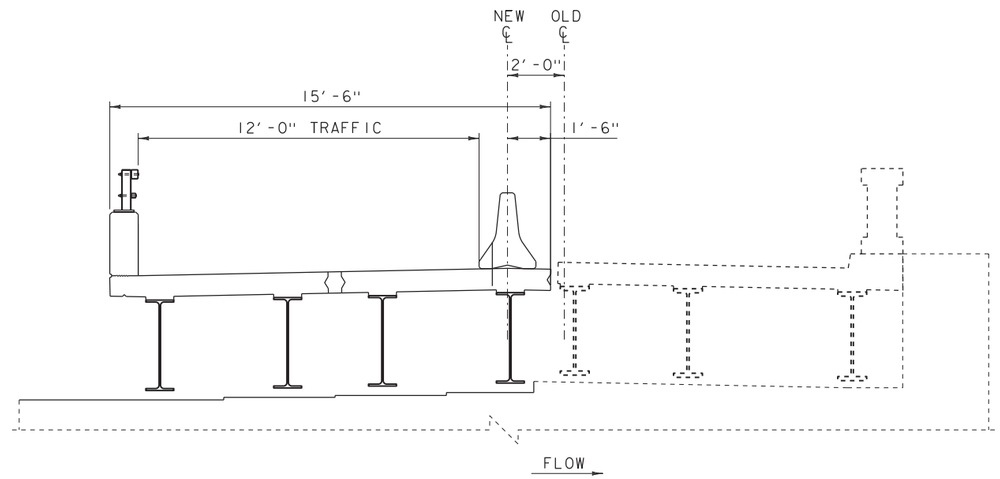

ALTERNATIVE #1 & #2 PHASE #1 TYPICAL SECTION

BRIDGE WILL BE CLOSED PRIOR TO THIS PHASE

SCALE 3/8" = 1'-0"

THERE WOULD BE A THREE DAY CLOSURE TO COMPLETE PHASE 1. THIS PHASE INCLUDES THE DEMOLITION OF THE UPSTREAM SIDES DECK AND REMOVAL OF BEAMS (WHERE NEEDED). INSTALLATION OF THE NEW PRECAST SECTIONS (INCLUDING BEAMS, WHERE NEEDED), AND INSTALLATION OF TEMPORARY TRAFFIC BARRIER.

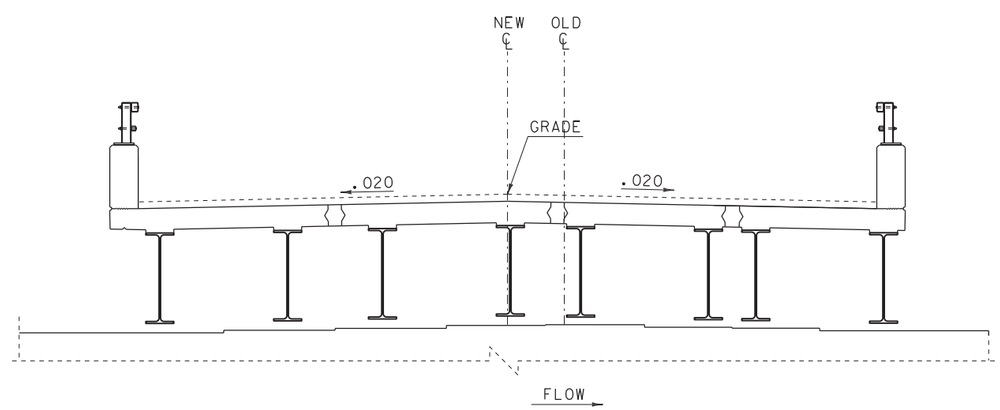

ALTERNATIVE #1 & #2 PHASING FINAL TYPICAL SECTION

SCALE 3/8" = 1'-0"

PROJECT NAME: CHELSEA	
PROJECT NUMBER: BHF 0169(9)	
FILE NAME: 12c150/s12c150typical.dgn	PLOT DATE: 07-MAY-2014
PROJECT LEADER: C.P.WILLIAMS	DRAWN BY: D.D.BEARD
DESIGNED BY: ------	CHECKED BY: G.SWEENY
PHASED CONSTRUCTION TYPICAL SECTIONS	SHEET 11 OF 16

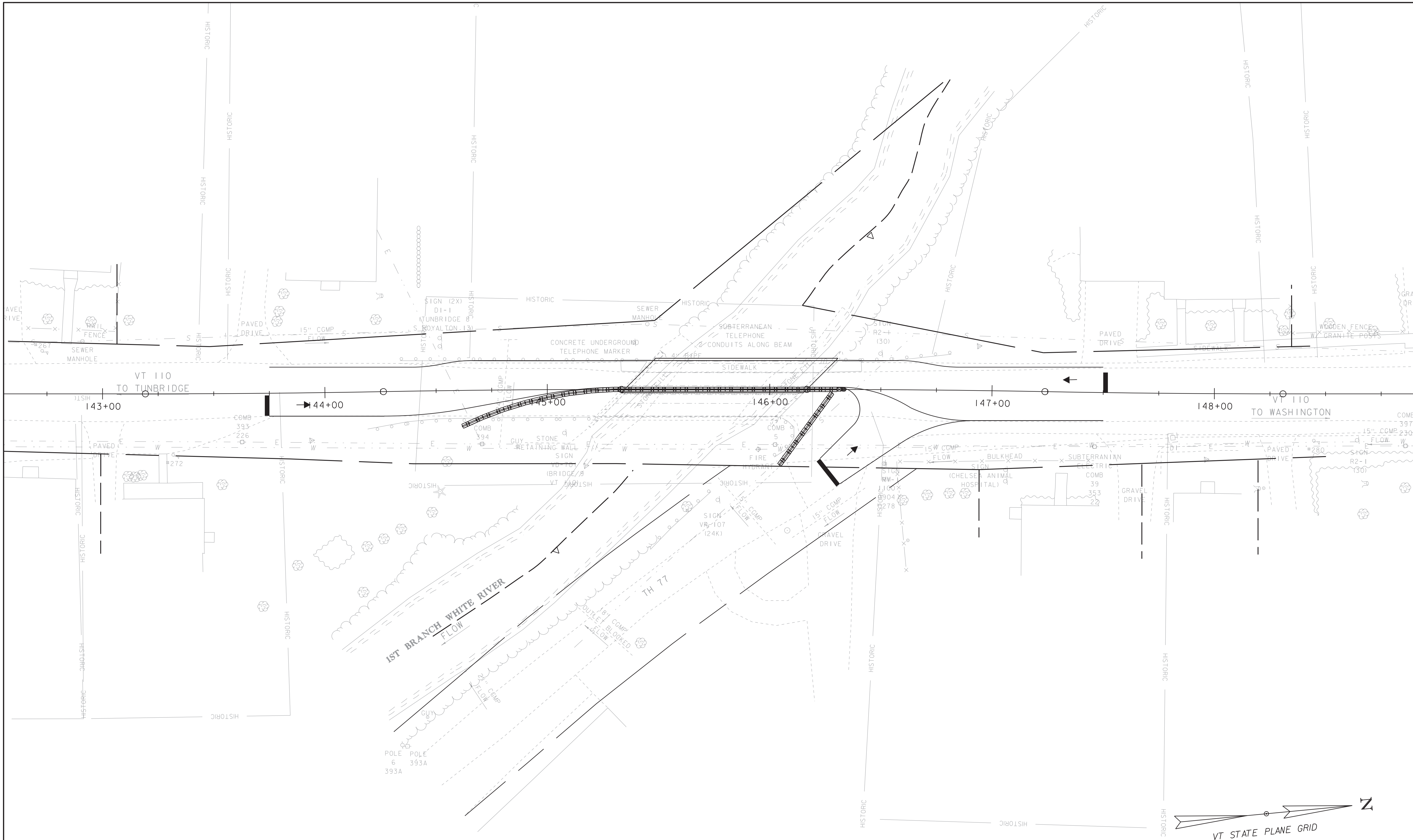

ALTERNATIVE #1 & #2 PHASING LAYOUT

SCALE 1" = 20'-0"
20 0 20

PROJECT NAME:	CHELSEA
PROJECT NUMBER:	BHF 0169(9)

FILE NAME: sl2cl50bdr.dgn	PLOT DATE: 07-MAY-2014
PROJECT LEADER: C.P.WILLIAMS	DRAWN BY: D.D.BEARD
DESIGNED BY: ------	CHECKED BY: ------
ALT 1&2 PHASING LAYOUT SHEET	SHEET 12 OF 16

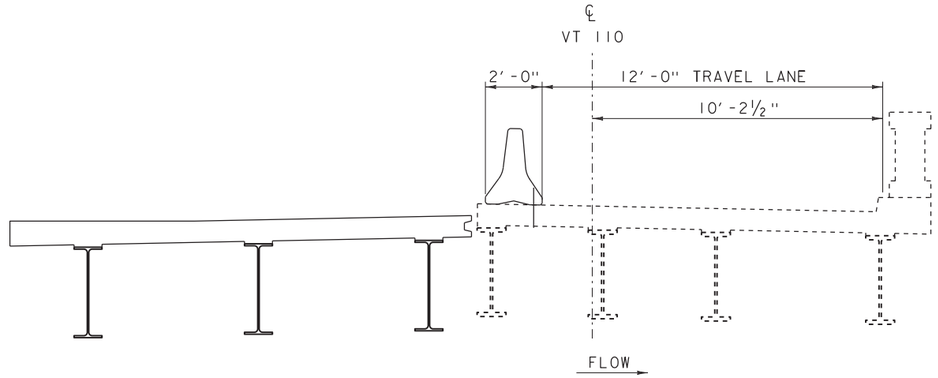

ALTERNATIVE #3 & #4 PHASE 1 TYPICAL SECTION

SCALE ⅜" = 1'-0"

PHASE 1: MAINTAIN ONE LANE TRAFFIC ON THE DOWNSTREAM SIDE OF THE EXISTING BRIDGE, WHILE DEMOLISHING THE UPSTREAM PORTION OF THE EXISTING BRIDGE, AND CONSTRUCTING THE NEW UPSTREAM PORTION OF THE BRIDGE DECK, WHILE NOT INSTALLING THE NEW SIDEWALK AND BRIDGE RAIL. MECHANICAL SPLICES FLUSH TO THE DECK WOULD BE NEEDED.

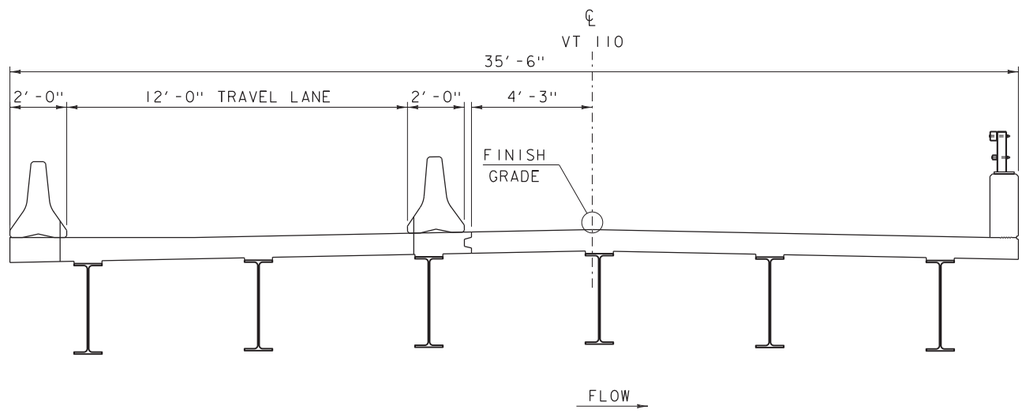

ALTERNATIVE #3 & #4 PHASE 2 TYPICAL SECTION

SCALE ⅜" = 1'-0"

PHASE 2: TRANSFER ONE WAY TRAFFIC TO THE UPSTREAM SIDE OF THE NEW BRIDGE, THEN DEMOLISH THE REMAINING EXISTING BRIDGE. FINALLY BUILD THE REMAINING DECK AND DOWNSTREAM BRIDGE RAILING.

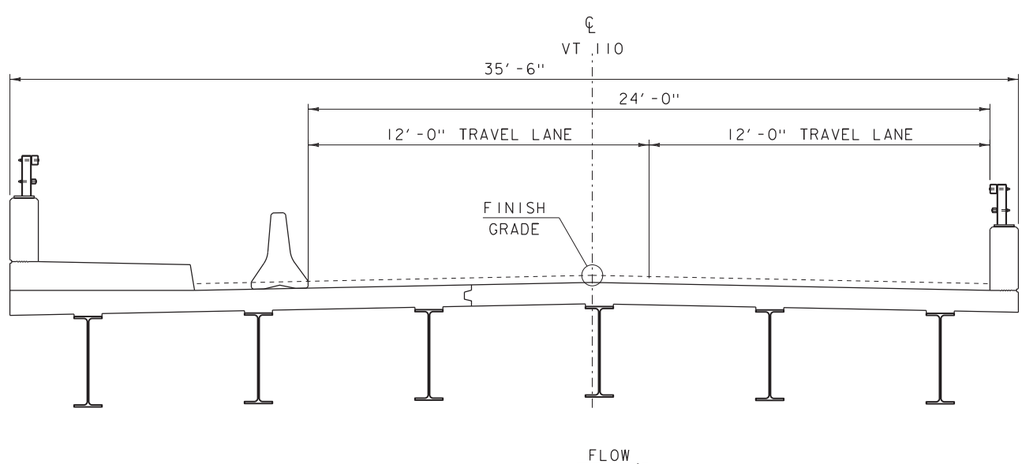

ALTERNATIVE #3 & #4 PHASE 3 TYPICAL SECTION

SCALE ⅜" = 1'-0"

PHASE 3: TRANSFER TRAFFIC TO TWO RESTRICTED LANES ON THE BARE DECK. CONSTRUCT THE NEW SIDEWALK AND UPSTREAM BRIDGE RAILING. ONCE THE SIDEWALK AND RAILING HAVE SUFFICIENTLY CURED; REMOVE BARRIER, APPLY WATERPROOFING, AND PAVE.

PROJECT NAME: CHELSEA	
PROJECT NUMBER: BHF 0169(9)	
FILE NAME: 12c150/s12c150typical.dgn	PLOT DATE: 07-MAY-2014
PROJECT LEADER: C.P.WILLIAMS	DRAWN BY: D.D.BEARD
DESIGNED BY: ------	CHECKED BY: G.SWEENY
PHASED CONSTRUCTION TYPICAL SECTIONS	SHEET 13 OF 16

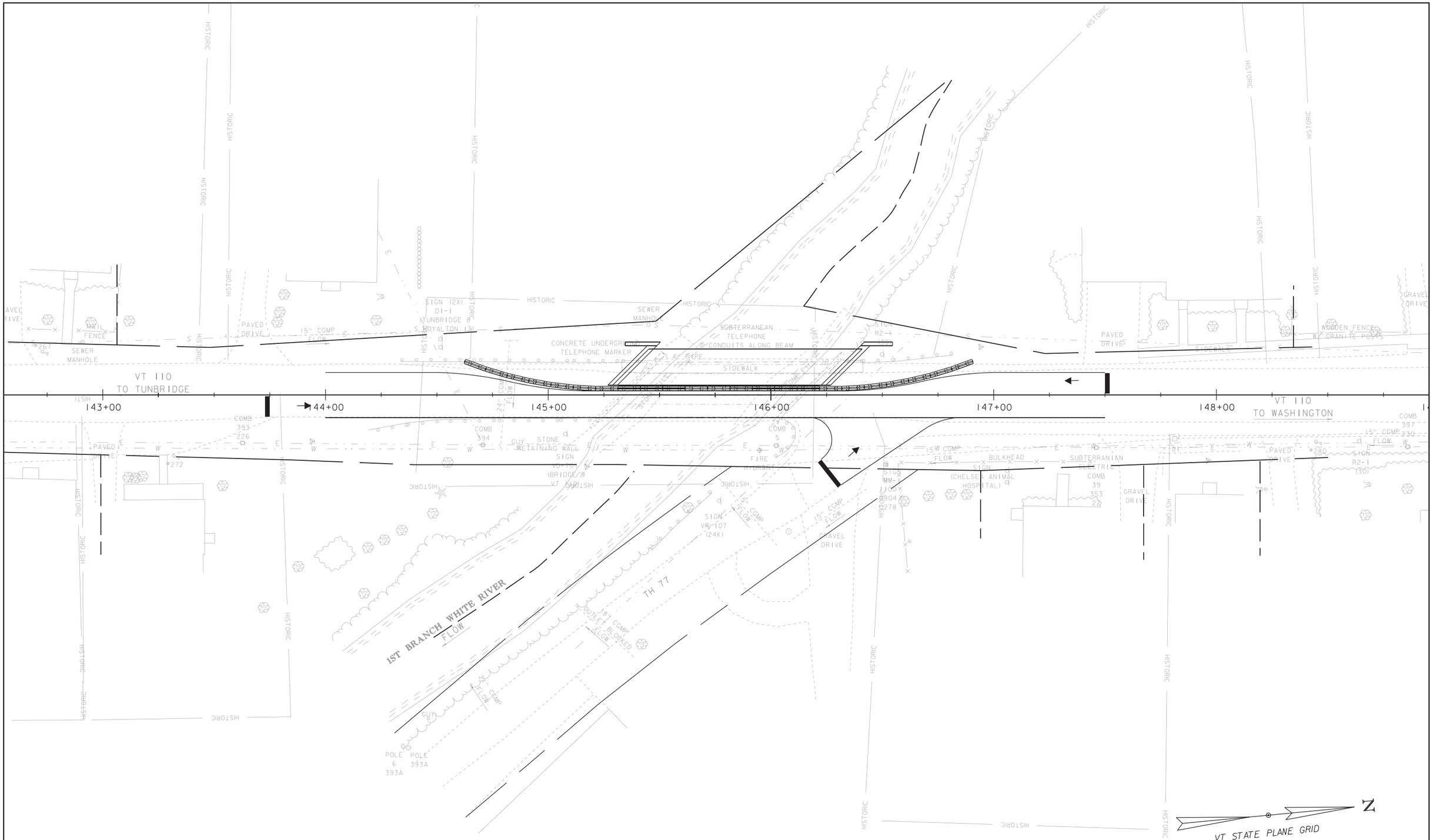

PHASE #1 LAYOUT

SCALE 1" = 20'-0"

20 0 20

PROJECT NAME: CHELSEA	
PROJECT NUMBER: BHF 0169(9)	
FILE NAME: s12c150bdr.dgn	PLOT DATE: 07-MAY-2014
PROJECT LEADER: C.P.WILLIAMS	DRAWN BY: D.D.BEARD
DESIGNED BY: ------	CHECKED BY: ------
PHASE I LAYOUT SHEET	SHEET 14 OF 16

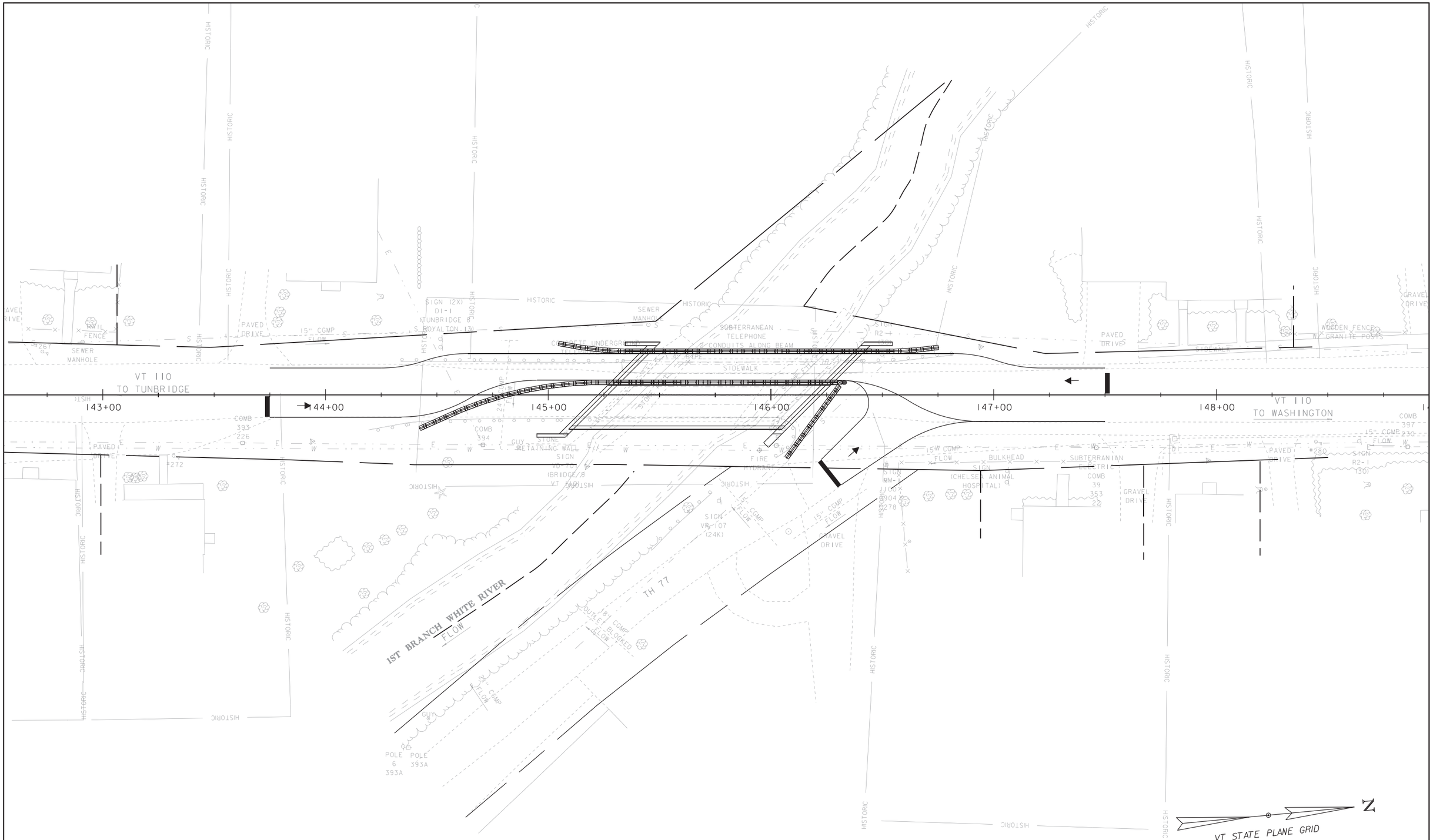

PHASE #2 LAYOUT

SCALE 1" = 20'-0"

20 0 20

PROJECT NAME: CHELSEA	
PROJECT NUMBER: BHF 0169(9)	
FILE NAME: s12c150bdr.dgn	PLOT DATE: 07-MAY-2014
PROJECT LEADER: C.P.WILLIAMS	DRAWN BY: D.D.BEARD
DESIGNED BY: ------	CHECKED BY: ------
PHASE 2 LAYOUT SHEET	SHEET 15 OF 16

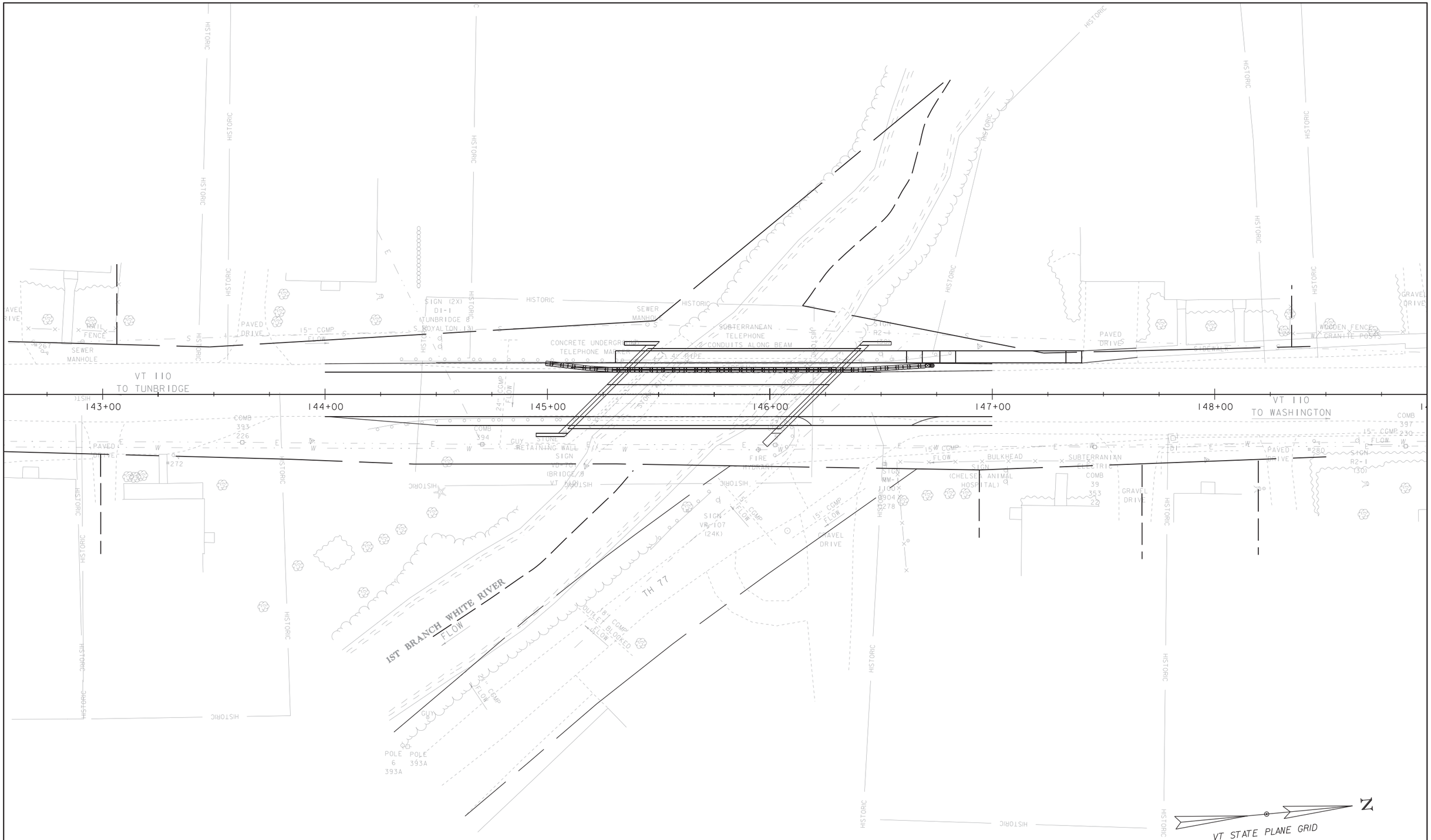

PHASE #3 LAYOUT

SCALE 1" = 20'-0"

20 0 20

PROJECT NAME: CHELSEA	
PROJECT NUMBER: BHF 0169(9)	
FILE NAME: s12c150bdr.dgn	PLOT DATE: 07-MAY-2014
PROJECT LEADER: C.P.WILLIAMS	DRAWN BY: D.D.BEARD
DESIGNED BY: ------	CHECKED BY: ------
PHASE 3 LAYOUT SHEET	SHEET 16 OF 16