STATE OF VERMONT
AGENCY OF TRANSPORTATION

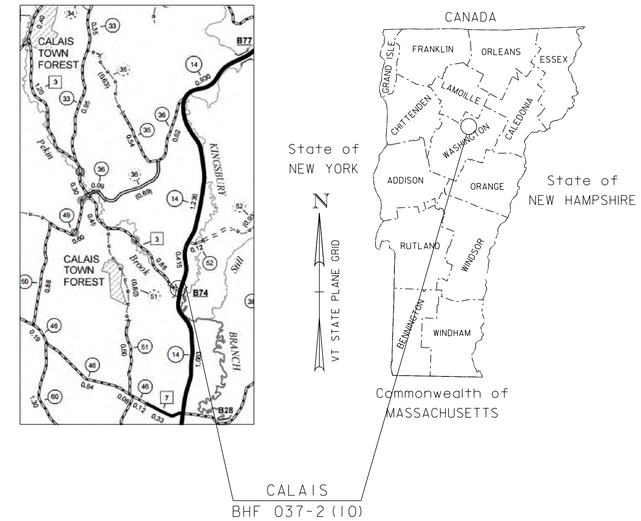

PROPOSED IMPROVEMENT
BRIDGE PROJECT
TOWN OF CALAIS
COUNTY OF WASHINGTON
BRIDGE #74
VT ROUTE 14 (RURAL MINOR ARTERIAL)

PROJECT LOCATION: 5.2 MILES NORTH OF JUNCTION WITH US ROUTE 2

PROJECT DESCRIPTION: WORK TO BE PERFORMED UNDER THIS CONTRACT INCLUDES PHASED REMOVAL OF EXISTING STRUCTURE, AND PHASED REPLACEMENT WITH NEW STRUCTURE, WITH ASSOCIATED ROADWAY AND CHANNEL WORK.

LENGTH OF STRUCTURE: 63.84 FEET
LENGTH OF ROADWAY: 236.16 FEET
LENGTH OF PROJECT: 300.00 FEET

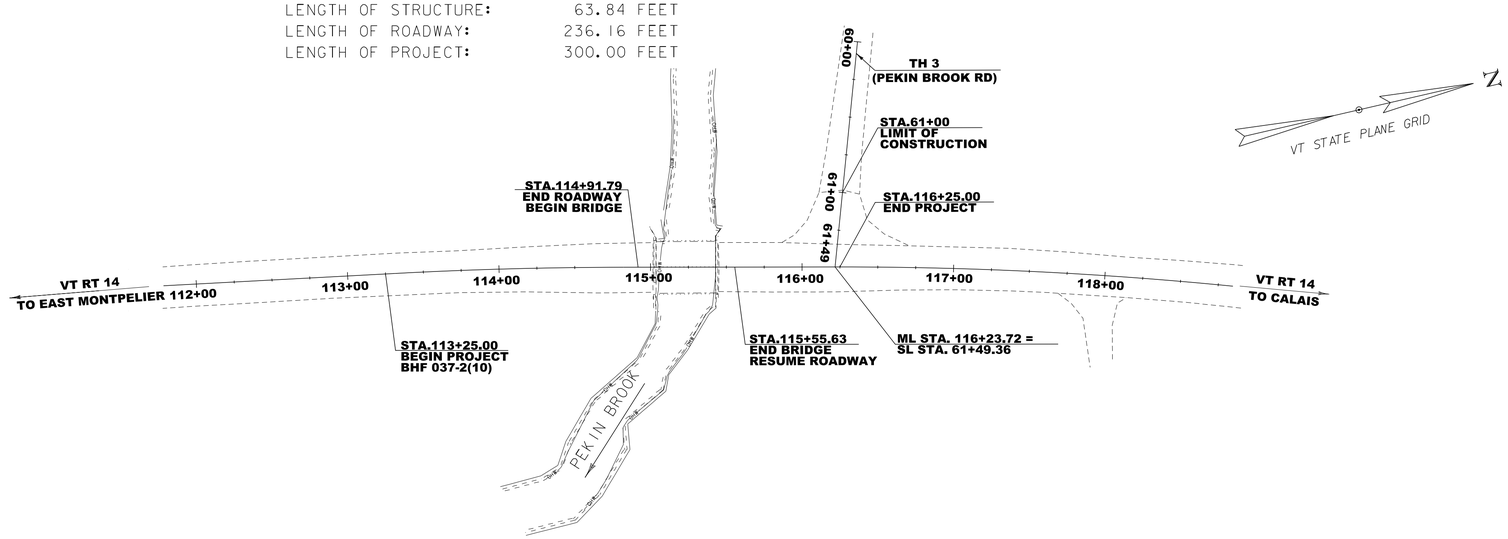

SCALE 1" = 50'-0"
50 0 50

CONSTRUCTION IS TO BE CARRIED ON IN ACCORDANCE WITH THESE PLANS AND THE STANDARD SPECIFICATIONS FOR CONSTRUCTION DATED 2011, AS APPROVED BY THE FEDERAL HIGHWAY ADMINISTRATION ON JULY 20, 2011 FOR USE ON THIS PROJECT, INCLUDING ALL SUBSEQUENT REVISIONS AND SUCH REVISED SPECIFICATIONS AND SPECIAL PROVISIONS AS ARE INCORPORATED IN THESE PLANS.

QUALITY ASSURANCE PROGRAM : LEVEL 2

SURVEYED BY : R. GILMAN
SURVEYED DATE : 05-30-2012

DATUM
VERTICAL NAVD88
HORIZONTAL NAD83 (2007)

PARSONS BRINCKERHOFF
650 ELM STREET
MANCHESTER, NH 03101

DIRECTOR OF PROJECT DELIVERY
APPROVED _____ DATE _____

PROJECT MANAGER : M. SARGENT

PROJECT NAME : CALAIS
PROJECT NUMBER : BHF 037-2(10)

SHEET 1 OF 53 SHEETS

STATE OF VERMONT
AGENCY OF TRANSPORTATION

PRELIMINARY INFORMATION SHEET (BRIDGE)

Version
LRFD

INDEX OF SHEETS

PLAN SHEETS

1	TITLE SHEET
2	PRELIMINARY INFORMATION SHEET
3 - 5	TYPICAL SECTIONS
6 - 7	PROJECT NOTES
8	LEGEND SHEET
9 - 11	QUANTITY SHEETS
12 - 13	SURVEY TIE SHEETS
14	LAYOUT SHEET
15 - 16	PROFILE SHEETS
17 - 18	TRAFFIC CONTROL SHEETS
19	TRAFFIC SIGN LAYOUT
20	TRAFFIC SIGN SUMMARY SHEET
21	BORING LOCATION PLAN
22 - 23	BORING LOG SHEETS
24	PLAN AND ELEVATION SHEET
25	FRAMING PLAN
26 - 27	NEXT BEAM DETAILS SHEET
28	ELASTOMERIC BEARING DETAILS
29	APPROACH SLAB DETAILS
30	ABUTMENT 1 PLAN
31	ABUTMENT 1 REINFORCEMENT PLAN
32	ABUTMENT 2 PLAN
33	ABUTMENT 2 REINFORCEMENT PLAN
34 - 35	BEAM END CLOSURE POUR DETAILS SHEETS
36	WINGWALL DETAILS SHEET
37	REINFORCING STEEL SCHEDULE
38 - 41	MAINLINE CROSS SECTIONS
42 - 43	PEKIN ROAD CROSS SECTIONS
44	BANKING DIAGRAM AND MATERIAL TRANSITION
45 - 47	CHANNEL CROSS SECTIONS
48	EPSC PLAN NARRATIVE
49	EPSC EXISTING CONDITIONS SITE PLAN
50	EPSC CONSTRUCTION CONDITIONS SITE PLAN
51	EPSC FINAL CONDITIONS SITE PLAN
52 - 53	EPSC DETAILS

STANDARDS LIST

B-5	SLOPE GRADING, EMBANKMENTS, MUCK	06-01-1994
D-4	VARIOUS DRAINAGE DETAILS	08-13-2007
D-30	UNDERDRAIN CONSTRUCTION DETAILS	08-13-2007
E-121	STANDARD SIGN PLACEMENT - CONVENTIONAL ROAD	08-08-1995
E-127	ROUTE MARKINGS AT RURAL INTERSECTION	08-08-1995
E-136B	STATE ROUTE MARKER SIGN DETAILS	08-08-1995
E-136C	STATE NUMBERED TOWN HIGHWAY SIGN DETAILS	08-08-1995
E-141	REGULATORY SIGN DETAILS	09-20-1995
G-1B	BOX BEAM GUARD RAIL	06-01-1994
G-19	GENERIC GRADING PLANS FOR GUARDRAIL END TERMINALS	11-15-2002
S-364A	BRIDGE RAILING, GALVANIZED 3 RAIL BOX BEAM	02-10-2014
S-364B	GUARDRAIL APPROACH SECTION, GALVANIZED 3 RAIL BOX BEAM	02-10-2014
T-1	TRAFFIC CONTROL GENERAL NOTES	08-06-2012
T-10	CONVENTIONAL ROADS CONSTRUCTION APPROACH SIGNING	08-06-2012
T-28	CONSTRUCTION SIGN DETAILS	08-06-2012
T-29	CONSTRUCTION SIGN DETAILS	08-06-2012
T-30	CONSTRUCTION SIGN DETAILS	08-06-2012
T-31	CONSTRUCTION SIGN DETAILS	08-06-2012
T-42	BRIDGE NUMBER PLAQUE	04-09-2014
T-45	SQUARE TUBE SIGN POST AND ANCHOR	01-02-2013

STRUCTURES DETAILS

SD-501.00	CONCRETE DETAILS AND NOTES	04-22-2010
SD-502.00	CONCRETE DETAILS AND NOTES	04-22-2010
SD-516.10	BRIDGE JOINT ASPHALTIC PLUG DETAIL SHEET	04-22-2010

AS BUILT "REBAR" DETAIL

LEVEL I	LEVEL II	LEVEL III
TYPE:	TYPE:	TYPE:
GRADE:	GRADE:	GRADE:

TRAFFIC DATA

YEAR	ADT	DHV	% D	% T	ADTT
2015	3300	390	76	2.4	190
2035	3500	410	76	3.2	270

20 year ESAL for flexible pavement from 2015 to 2035 : 2411000
40 year ESAL for flexible pavement from 2015 to 2055 : 5686000
Design Speed : 50 mph

FINAL HYDRAULIC REPORT

HYDROLOGIC DATA

Date: 10/21/2013

DRAINAGE AREA : 22.6 sq. mi.
CHARACTER OF TERRAIN : Mostly hilly and forested
STREAM CHARACTERISTICS : Incised and alluvial
NATURE OF STREAMBED : Silt and very fine sand

PEAK FLOW DATA

Q 2.33 =	525 cfs	Q 50 =	2010 cfs
Q 10 =	1200 cfs	Q 100 =	2400 cfs
Q 25 =	1620 cfs	Q 500 =	3360 cfs

DATE OF FLOOD OF RECORD: Unknown
ESTIMATED DISCHARGE: Unknown
WATER SURFACE ELEV.: Unknown
NATURAL STREAM VELOCITY: @ Q50 = 10.8 fps
ICE CONDITIONS : Moderate
DEBRIS: Slight to moderate
DOES THE STREAM REACH MAXIMUM HIGHWATER ELEV. RAPIDLY? No
IS ORDINARY RISE RAPID? No
IS STAGE AFFECTED BY UPSTREAM OR DOWNSTREAM CONDITIONS? No
IF YES, DESCRIBE:

WATERSHED STORAGE: 3%
HEADWATERS:
UNIFORM: X
IMMEDIATELY ABOVE SITE:

EXISTING STRUCTURE INFORMATION

STRUCTURE TYPE: Single span concrete t-beam
YEAR BUILT: 1928
CLEAR SPAN(NORMAL TO STREAM): 40.0 ft
VERTICAL CLEARANCE ABOVE STREAMBED: ~7.0'
WATERWAY OF FULL OPENING: 208.0 sf
DISPOSITION OF STRUCTURE: Remove and replace
TYPE OF MATERIAL UNDER SUBSTRUCTURE: See boring logs

WATER SURFACE ELEVATIONS AT:

Q2.33 =	711.6'	VELOCITY =	5.9 fps
Q10 =	714.0'	"	8.8 fps
Q25 =	716.1'	"	10.2 fps
Q50 =	717.4'	"	11.0 fps
Q100 =	718.1'	"	11.6 fps

LONG TERM STREAMBED CHANGES: None noted

IS THE ROADWAY OVERTOPPED BELOW Q100: yes
FREQUENCY: Just above Q50
RELIEF ELEVATION: 717.5'
DISCHARGE OVER ROAD @Q100: 115 cfs

UPSTREAM STRUCTURE

TOWN: Calais
DISTANCE: 3730'
HIGHWAY # : TH 3
STRUCTURE #: 13
CLEAR SPAN: 18'
CLEAR HEIGHT: 10'
YEAR BUILT: 1954
FULL WATERWAY:
STRUCTURE TYPE: CGMPPA

DOWNSTREAM STRUCTURE

TOWN: Calais
DISTANCE: 250'
HIGHWAY # :
STRUCTURE #:
CLEAR SPAN:
CLEAR HEIGHT:
YEAR BUILT:
FULL WATERWAY:
STRUCTURE TYPE: Confluence with Kingsbury Branch

LRFR LOAD RATING FACTORS

LOADING LEVELS	TRUCK						
	H-20	HL-93	3S2	6 AXLE	3A. STR.	4A. STR.	5A. SEMI
TONNAGE							
INVENTORY							
POSTING							
OPERATING							
COMMENTS:							

PILE DRIVING AND TESTING REQUIREMENTS

1. NOMINAL PILE DRIVING CAPACITY — Rndr: 473.00 KIP
2. PILE TEST RESISTANCE FACTOR — ϕ: 0.65
3. MAXIMUM PILE TIP ELEVATION — SEE BORINGS

PROPOSED STRUCTURE

STRUCTURE TYPE: NEXT Beam Bridge

CLEAR SPAN(NORMAL TO STREAM): 58'
VERTICAL CLEARANCE ABOVE STREAMBED: ~7'
WATERWAY OF FULL OPENING: 240 sq. ft.

WATER SURFACE ELEVATIONS AT:

Q2.33 =	711.6'	VELOCITY=	5.9 fps
Q10 =	714.0'	"	8.8 fps
Q25 =	715.7'	"	10.2 fps
Q50 =	716.7'	"	10.8 fps
Q100 =	717.8	"	10.7 fps

IS THE ROADWAY OVERTOPPED BELOW Q100: Yes
FREQUENCY: Just below Q100
RELIEF ELEVATION: 717.7'
DISCHARGE OVER ROAD @Q100: 15 cfs

AVERAGE LOW ELEVATION OF SUPERSTRUCTURE: 714.8'
VERTICAL CLEARANCE: @ Q50 = -1.9'

SCOUR: Contraction scour at Q200 = 11'

REQUIRED CHANNEL PROTECTION: Stone Fill Type III

PERMIT INFORMATION

AVERAGE DAILY FLOW:	45 cfs	AVERAGE DAILY FLOW:	DEPTH OR ELEVATION:
ORDINARY LOW WATER	20 cfs	ORDINARY LOW WATER:	~1.5'
ORDINARY HIGH WATER	225 cfs	ORDINARY HIGH WATER:	~3.0'

TEMPORARY BRIDGE REQUIREMENTS

STRUCTURE TYPE: None Required - Phased Construction Will Be Used
CLEAR SPAN (NORMAL TO STREAM): n/a
VERTICAL CLEARANCE ABOVE STREAMBED: n/a
WATERWAY AREA OF FULL OPENING: n/a

ADDITIONAL INFORMATION

TRAFFIC MAINTENANCE NOTES

1. MAINTAIN ONE-WAY TRAFFIC ON THE EXISTING STRUCTURE.
2. INSTALL AND MAINTAIN TRAFFIC SIGNALS.
3. SIDEWALKS ARE NOT NECESSARY

DESIGN VALUES

1. DESIGN LIVE LOAD		HL-93
2. FUTURE PAVEMENT	d_p:	0.0 INCH
3. DESIGN SPAN	L:	62.50 FT
4. MIN. MID-SPAN POS. CAMBER @ RELEASE (PRESTRESSED UNITS)	Δ:	---
5. PRESTRESSING STRAND (0.60 INCH DIAMETER - LOW RELAX)	f_y:	270 KSI
6. PRESTRESSED CONCRETE STRENGTH	f'_c:	8.0 KSI
7. PRESTRESSED CONCRETE RELEASE STRENGTH	f'_{ci}:	6.0 KSI
8. CONCRETE, HIGH PERFORMANCE CLASS AA	f'_c:	---
9. CONCRETE, HIGH PERFORMANCE CLASS A	f'_c:	---
10. CONCRETE, HIGH PERFORMANCE CLASS B	f'_c:	---
11. CONCRETE, CLASS C	f'_c:	---
12. REINFORCING STEEL	f_y:	60 KSI
13. STRUCTURAL STEEL AASHTO M270	f_y:	---
14. SOIL UNIT WEIGHT	γ:	0.135 KCF
15. NOMINAL BEARING RESISTANCE OF SOIL	q_n:	---
16. SOIL BEARING RESISTANCE FACTOR (REFER TO AASHTO LRFD)	ϕ:	---
17. NOMINAL BEARING RESISTANCE OF ROCK	q_n:	---
18. ROCK BEARING RESISTANCE FACTOR (REFER TO AASHTO LRFD)	ϕ:	---
19. NOMINAL AXIAL PILE RESISTANCE	q_p:	480 KIPS
20. PILE YIELD STRENGTH ASTM A572	f_y:	50 KSI
21. PILE SIZE		HP 12X84
22. PILE RESISTANCE FACTOR	ϕ:	---
23. LATERAL PILE DEFLECTION	Δ:	---
24. BASIC WIND SPEED	V_{3s}:	---
25. MINIMUM GROUND SNOW LOAD	p_g:	---
26. SEISMIC DATA — PGA: 0.097	S_s:	0.19
	S_1:	0.055
27.		---

PROJECT NAME: **CALAIS**
PROJECT NUMBER: **BHF 037-2(10)**

FILE NAME:	z12b144pi.dgn	PLOT DATE:	7/31/2015
PROJECT LEADER:	G.K.DONINGTON	DRAWN BY:	S.BROWN
DESIGNED BY:	S.BROWN	CHECKED BY:	A.STOCKIN
PRELIMINARY INFORMATION SHEET		SHEET	2 OF 53

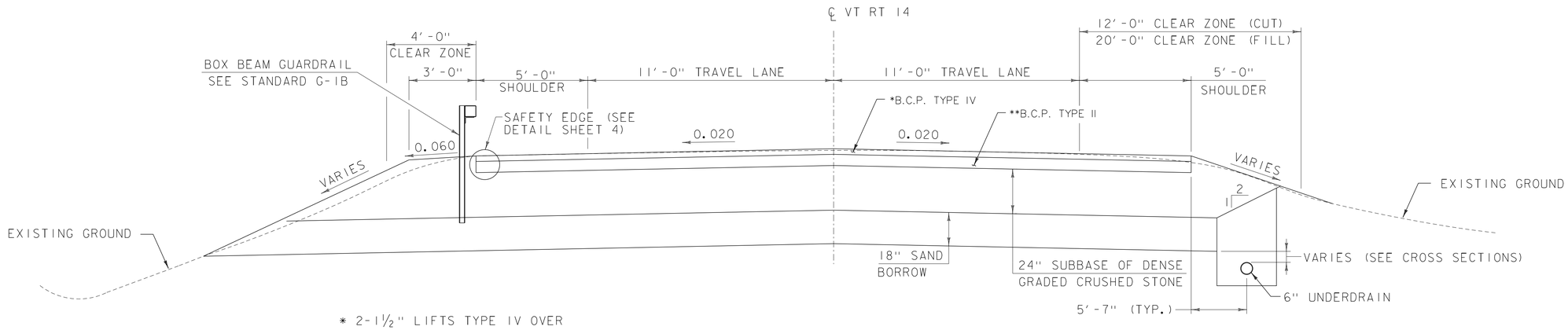

* 2-1½" LIFTS TYPE IV OVER

** 2-3" LIFTS TYPE II

VT 14 TYPICAL SECTION

SCALE ⅜" = 1'-0"

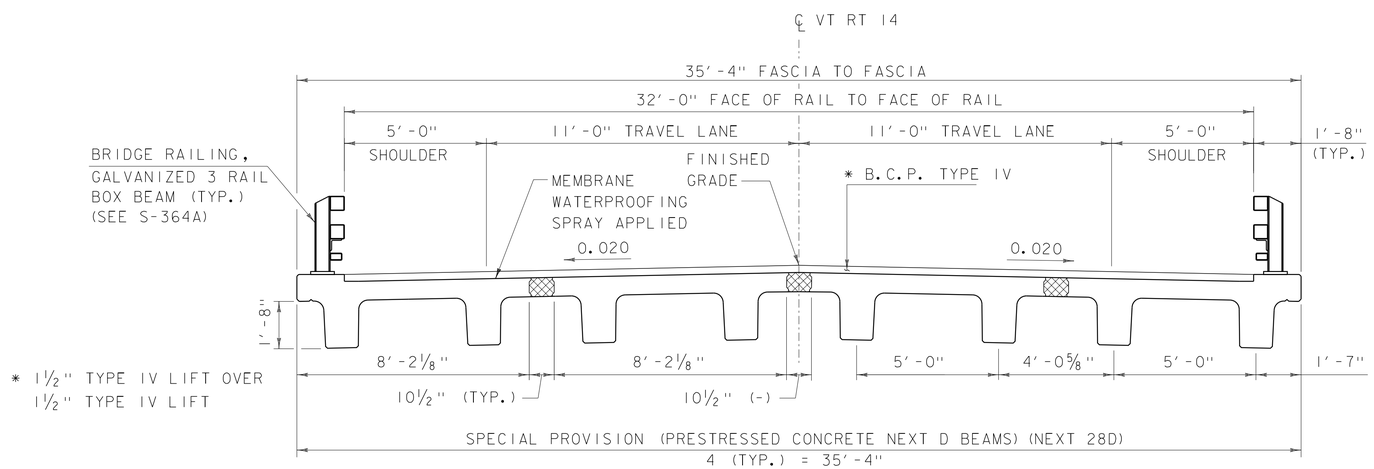

* 1½" TYPE IV LIFT OVER
1½" TYPE IV LIFT

BRIDGE TYPICAL SECTION

SCALE ⅜" = 1'-0"

LEGEND

ITEM 900.608 SPECIAL PROVISION
(HIGH PERFORMANCE CONCRETE, RAPID SET) (FPQ)

GENERAL NOTES

MARKER POSTS: TO BE PLACED AS INDICATED BY THE ENGINEER.

SLOPE ROUNDING: ALL CUT SLOPES TO BE ROUNDED IN ACCORDANCE WITH STANDARD SHEET B-5.

TACK COAT: EMULSIFIED ASPHALT IS TO BE APPLIED AT THE RATE OF 0.040 GAL/SY BETWEEN SUCCESSIVE COURSES OF PAVEMENT AS DIRECTED BY THE ENGINEER.

MATERIAL TOLERANCES

(IF USED ON PROJECT)

PAVEMENT (TOTAL DEPTH)	+/- ¼"
SUBBASE	+/- 1"
SAND BORROW	+/- 1"

PARSONS BRINCKERHOFF
650 ELM STREET
MANCHESTER, NH 03101

PROJECT NAME: CALAIS
PROJECT NUMBER: BHF 037-2(10)

FILE NAME: z12b144typical.dgn
PROJECT LEADER: G.K.DONINGTON
DESIGNED BY: S.BROWN
TYPICAL SECTIONS (1) OF (3)

PLOT DATE: 31-JULY-2015
DRAWN BY: S.BROWN
CHECKED BY: A.STOCKIN
SHEET 3 OF 53

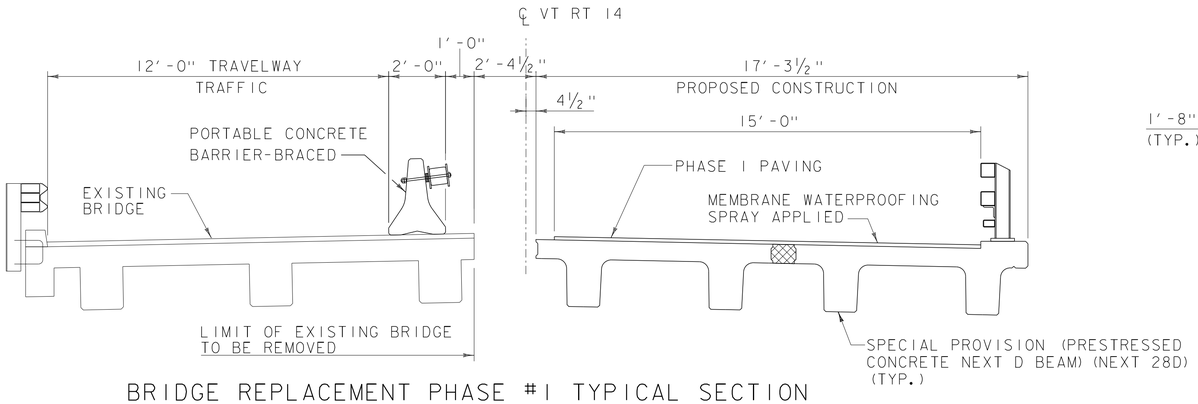

BRIDGE REPLACEMENT PHASE #1 TYPICAL SECTION

SCALE ⅜" = 1'-0"

NOTE: TRAVEL SURFACE WILL BE 1½" TYPE IV LIFT OVER WATERPROOFING MEMBRANE UNTIL FINAL PAVING OPERATIONS ARE COMPLETED

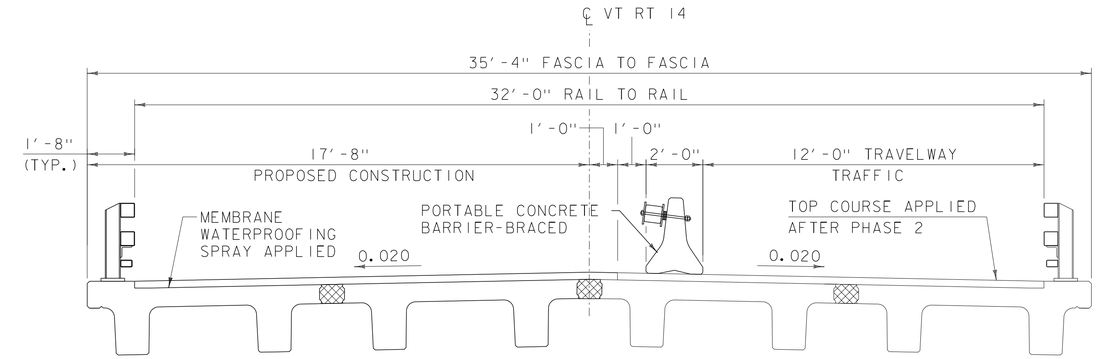

BRIDGE REPLACEMENT PHASE #2 TYPICAL SECTION

SCALE ⅜" = 1'-0"

NOTE: TRAVEL SURFACE WILL BE 1½" TYPE IV LIFT OVER WATERPROOFING MEMBRANE UNTIL FINAL PAVING OPERATIONS ARE COMPLETED

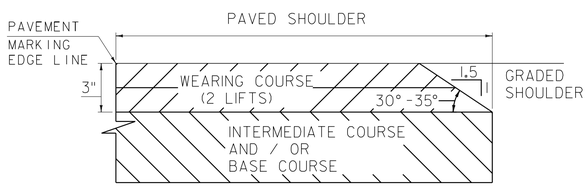

SAFETY EDGE DETAIL

(NOT TO SCALE)

NOTE

LEVELING COURSE MAY INCLUDE THE "SAFETY EDGE" AT THE CONTRACTOR'S CHOICE.

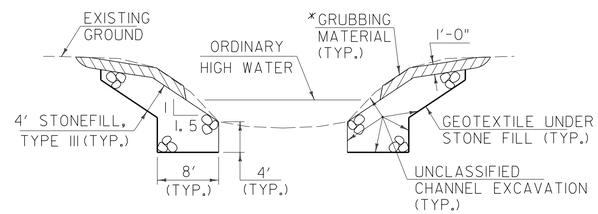

TYPICAL CHANNEL SECTION

NOT TO SCALE

*WHENEVER CHANNEL SLOPE INTERSECTS ROADWAY SUBBASE, GRUBBING MATERIAL SHALL BEGIN AT THE BOTTOM OF SUBBASE.

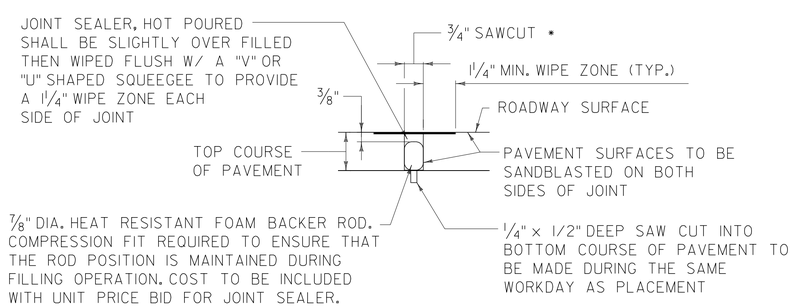

SAWED PAVEMENT JOINT DETAIL

SCALE: 3" = 1'-0"

* JOINT IS TO BE LOCATED ACCURATELY BY STRING LINING, OR OTHER MEANS, PRIOR TO PAVING, SO THAT THE SAW CUTS WILL BE MADE DIRECTLY OVER THE END OF THE CONCRETE APPROACH SLAB. JOINT SHALL BE CUT DRY IN A SINGLE PASS AND BE SEALED WITHIN 24 HOURS OR PRIOR TO EXPOSURE TO TRAFFIC. JOINT SHALL BE CLEANED PRIOR TO APPLYING THE JOINT SEALER. (REFER TO SPECIFICATION 524)

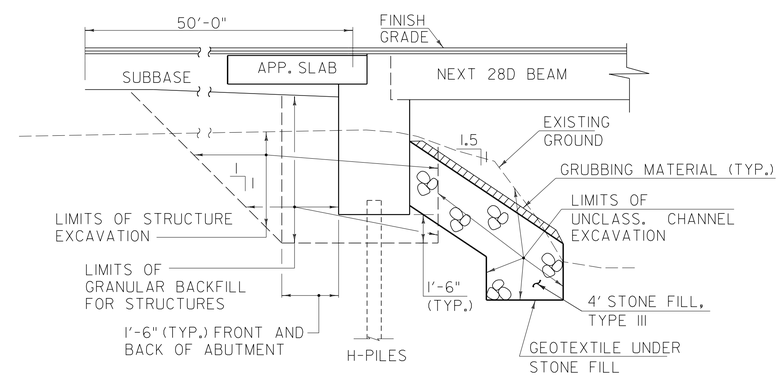

TYPICAL ABUTMENT SECTION

NOT TO SCALE

PARSONS BRINCKERHOFF
650 ELM STREET
MANCHESTER, NH 03101

PROJECT NAME: CALAIS	
PROJECT NUMBER: BHF 037-2(10)	
FILE NAME: z12b144typical.dgn	PLOT DATE: 31-JULY-2015
PROJECT LEADER: G.K.DONINGTON	DRAWN BY: S.BROWN
DESIGNED BY: S.BROWN	CHECKED BY: A.STOCKIN
TYPICAL SECTIONS (2) OF (3)	SHEET 4 OF 53

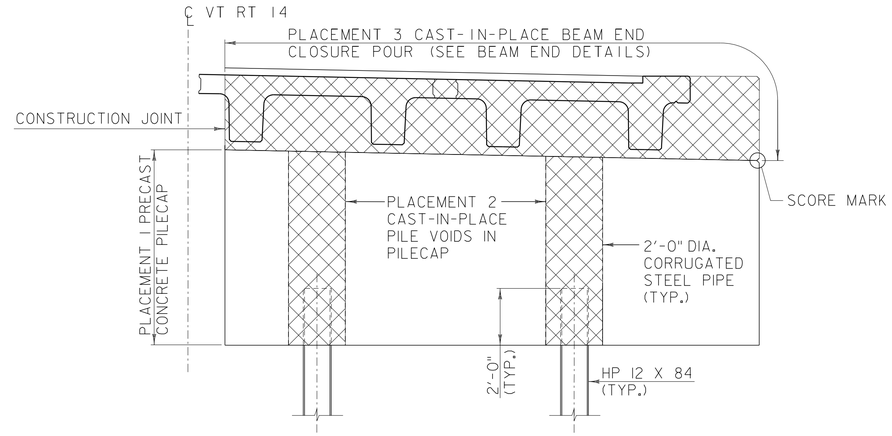

ABUTMENT 1 ELEVATION
PHASE #1 CONSTRUCTION

(ABUTMENT 1 SHOWN, ABUTMENT 2 MIRRORED)
SCALE: 3/8" = 1'-0"

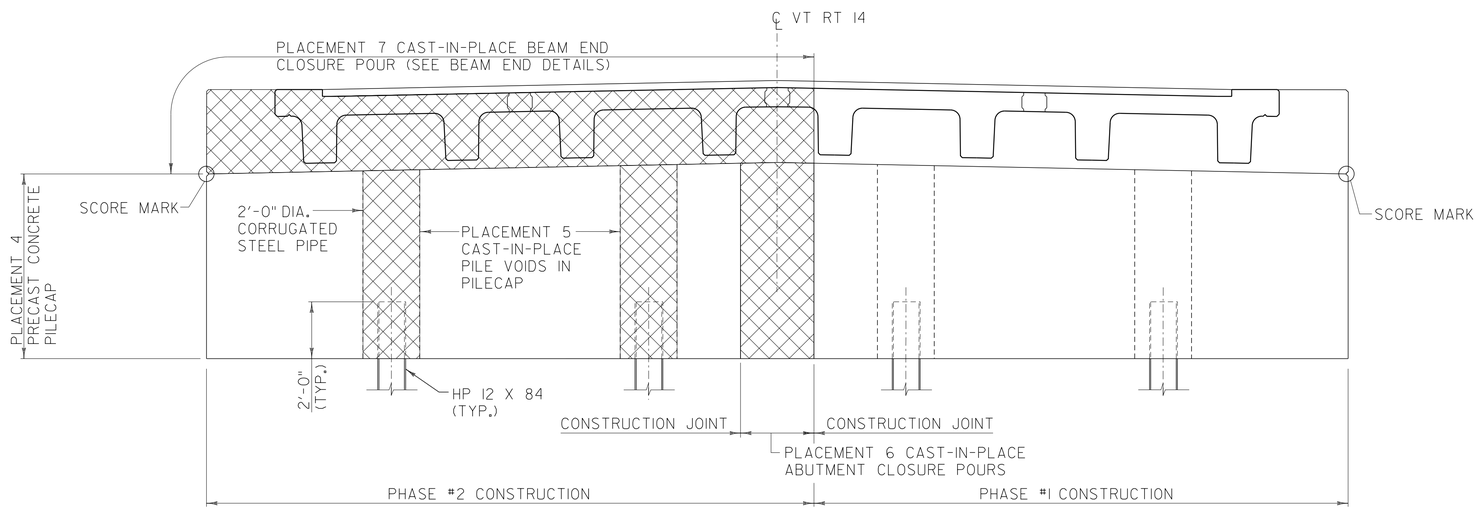

ABUTMENT 1 ELEVATION
PHASE #2 CONSTRUCTION

(ABUTMENT 1 SHOWN, ABUTMENT 2 MIRRORED)
SCALE: 3/8" = 1'-0"

ITEM 900.608 SPECIAL PROVISION
(HIGH PERFORMANCE CONCRETE, RAPID SET) (FPQ)

PARSONS BRINCKERHOFF
650 ELM STREET
MANCHESTER, NH 03101

PROJECT NAME: CALAIS	
PROJECT NUMBER: BHF 037-2(10)	
FILE NAME: z12b144typical.dgn	PLOT DATE: 31-JULY-2015
PROJECT LEADER: G.K.DONINGTON	DRAWN BY: S.BROWN
DESIGNED BY: S.BROWN	CHECKED BY: B.HOLSAPPLE
TYPICAL SECTIONS (3) OF (3)	SHEET 5 OF 53

GENERAL

1. ALL MATERIALS AND CONSTRUCTION WILL CONFORM TO THE STATE OF VERMONT AGENCY OF TRANSPORTATION 2011 STANDARD SPECIFICATIONS FOR CONSTRUCTION, AND ITS LATEST REVISION, AASHTO LRFD BRIDGE DESIGN SPECIFICATIONS, 7th EDITION, AND THEIR LATEST REVISIONS, AND PCI NORTHEAST'S NEXT D STANDARDS DATED JANUARY 2010, AND THEIR LATEST REVISIONS.
2. ALL PRECAST CONCRETE ELEMENTS ARE TO BE FABRICATED TO THE SPECIFIED DIMENSIONS WITH THE TOLERANCES DICTATED IN THE PRECAST/PRESTRESSED CONCRETE INSTITUTION TOLERANCE MANUAL FOR PRECAST AND PRESTRESSED CONCRETE CONSTRUCTION, MNL 135-00, AND ITS LATEST REVISIONS.
3. ITEM 529.15 "REMOVAL OF STRUCTURE" WILL BE USED FOR THE COMPLETE REMOVAL AND DISPOSAL OF THE EXISTING SUPERSTRUCTURE AND SUBSTRUCTURE, INCLUDING ANY PORTION OF THE ABUTMENTS AND WINGWALLS OUTSIDE THE LIMITS OF STRUCTURE EXCAVATION OR UNCLASSIFIED CHANNEL EXCAVATION.
4. DUE TO STABILITY CONCERNS AT THE ABUTMENTS DURING THE ERECTION OF THE SUPERSTRUCTURE, THE CONTRACTOR WILL SUBMIT THE ERECTION PLAN A MINIMUM OF 30 WORKING DAYS PRIOR TO THE COMMENCEMENT OF CONSTRUCTION ACTIVITIES. UNDER NO CIRCUMSTANCES WILL THE CONTRACTOR BEGIN CONSTRUCTION PRIOR TO HAVING AN ACCEPTED ERECTION PLAN.
5. ALL DIMENSIONS SHOWN IN THE PLANS ARE HORIZONTAL OR VERTICAL AND ARE GIVEN AT 68 DEGREES FAHRENHEIT, UNLESS NOTED OTHERWISE.
6. MODIFICATIONS TO EXISTING UTILITIES, INCLUDING UTILITY POLES AND AERIAL ELECTRIC, WILL BE THE RESONSIBILITY OF THE UTILITY COMPANY. SEE CONTRACT SPECIAL PROVISIONS FOR ADDITIONAL INFORMATION AND REQUIREMENTS. THE CONTRACTOR IS SOLELY RESONSIBLE FOR LOCATING AND PROTECTING FROM DAMAGE, ALL UTILITIES ON SITE DURING ALL STAGES OF CONSTRUCTION.
7. THE METHOD OF FORMING FOR SUBSEQUENT POURS AFTER PLACING PRECAST/PRESTRESSED SUPERSTRUCTURE UNITS WILL BE DETERMINED BY THE CONTRACTOR. THE CONTRACTOR IS ENCOURAGED TO WORK WITH THE FABRICATOR IF ADDITIONAL SUPPORTS MAY BE REQUIRED. IN NO CASE WILL THE CONTRACTOR ATTACH ADDITIONAL FORM OR SCREED SUPPORTS BY DRILLING OR SIMILAR MEANS INTO ANY PRECAST/PRESTRESSED SUPERSTRUCTURE OR SUBSTRUCTURE UNITS.

EARTHWORK:

8. "STONE FILL, TYPE III", "GEOTEXTILE UNDER STONE FILL", AND "GRUBBING MATERIAL" UNDER THE BRIDGE AS SHOWN IN THE PLANS WILL BE PLACED BEFORE THE NEXT BEAMS ARE SET. ANY ADJUSTMENTS TO THE PROPOSED GRADE WILL BE AT THE DIRECTION OF THE ENGINEER.
9. SUPPORT OF EXCAVATION WILL BE MAINTAINED AT ALL TIMES DURING LIVE TRAFFIC OPERATIONS. SUPPORT OF EXCAVATION WILL BE DETAILED BY THE CONTRACTOR AND SUBMITTED TO THE ENGINEER FOR APPROVAL. ALL COSTS WILL BE INCLUDED IN THE UNIT PRICE BID FOR CONTRACT ITEM 204.25 STRUCTURE EXCAVATION.
10. ABUTMENTS WILL BE BACKFILLED TO 1'-8" BELOW TOP OF ABUTMENT BEAM SEATS PRIOR TO ERECTING BEAMS.

TRAFFIC CONTROL:

11. THE CONTRACTOR WILL BE RESPONSIBLE FOR SUPPLYING THE SITE SPECIFIC TRAFFIC CONTROL PACKAGE IDENTIFYING CONSTRUCTION ACTIVITIES AT EACH CONSTRUCTION PHASE. THE CONTRACTOR WILL SUBMIT A DETAILED TRAFFIC CONTROL PLAN TO THE RESIDENT ENGINEER FOR ALL STAGES OF CONSTRUCTION FOR APPROVAL. ALL COSTS WILL BE INCLUDED IN ITEM 900.645 "SPECIAL PROVISION (TRAFFIC CONTROL, ALL - INCLUSIVE)".
12. ALL SIGNING WILL BE IN ACCORDANCE WITH MANUAL ON UNIFORM TRAFFIC CONTROL DEVICES (MUTCD), AND ITS LATEST REVISIONS, AND VTRANS TRAFFIC CONTROL STANDARDS, REQUIREMENTS AND SPECIFICATIONS. WHERE CONFLICTS EXIST BETWEEN AOT STANDARDS AND MUTCD, THE MUTCD WILL GOVERN.
13. ALL ITEMS REQUIRED TO IMPLEMENT THE CONTRACTOR'S TRAFFIC CONTROL PLAN WILL NOT BE PAID FOR DIRECTLY. THEY WILL BE INCLUDED IN THE BID PRICE FOR ITEM 900.645, "SPECIAL PROVISION (TRAFFIC CONTROL, ALL - INCLUSIVE)".

SUBSTRUCTURES AND APPROACH SLABS:

14. THE UNIT PRICE FOR EACH PRECAST ABUTMENT WILL INCLUDE ALL SEGMENTS INCLUDING THE ASSOCIATED PRECAST WINGWALLS AND ALL LABOR AND MATERIALS TO CONNECT WINGWALLS TO THE PILE CAPS. THIS WORK WILL BE PAID FOR UNDER ITEM 540.10, "PRECAST CONCRETE STRUCTURE (ABUTMENT #1)" OR "PRECAST CONCRETE STRUCTURE (ABUTMENT #2)" AS APPROPRIATE.
15. VERTICAL CONSTRUCTION JOINTS ARE REQUIRED FOR SHIPMENT OF THE ABUTMENTS. A JOINT DETAIL WILL BE SHOWN ON THE FABRICATION DRAWINGS.
16. CONTRACTOR/FABRICATOR WILL SHOP VERIFY PROPER FIT OF ALL PRECAST BRIDGE SUBSTRUCTURE ELEMENTS TO BE CONNECTED.
17. REINFORCEMENT IN TOP OF ABUTMENTS WILL BE CENTERED ABOUT THE ANCHOR RODS SO THAT NO REINFORCEMENT IS DAMAGED DURING ANCHOR ROD INSTALLATION.
18. JOINT BETWEEN PRECAST WINGWALLS AND PRECAST PILE CAPS WILL BE FILLED WITH EPOXY BONDING COMPOUND AFTER MECHANICAL CONNECTORS HAVE BEEN CONNECTED AND GROUTED. PAYMENT FOR JOINT EPOXY TREATMENT WILL BE PAID FOR UNDER ITEM 540.10, "PRECAST CONCRETE STRUCTURE (ABUTMENT #1)" AND "PRECAST CONCRETE STRUCTURE (ABUTMENT #2)" AS APPROPRIATE.
19. PRIOR TO BACKFILLING, GROUT IN GROUTED SPLICE COUPLERS WILL ATTAIN A MINIMUM COMPRESSIVE STRENGTH OF 85% OF 5000 PSI BASED ON MANUFACTURER'S RECOMMENDATIONS. PROVIDE APPROPRIATE CUBE MOLDS AS DESCRIBED IN AASHTO T106 FOR 3 SETS OF 3 DAY CUBES, 3 SETS OF 28 DAY CUBES, AND A MINIMUM OF 3 MORE CUBES TO TEST FOR THE 85% OF 5000 PSI MINIMUM (PRIOR TO BACKFILLING) IN ACCORDANCE WITH SUBSECTION 540.11.
20. THE CONTRACTOR WILL POWER WASH WITH WATER THE TOPS OF THE ABUTMENT STEMS PRIOR TO PLACING THE NEXT BEAMS AND FORMING THE CLOSURE POUR.
21. THE CORRUGATED STEEL PIPE WILL MEET THE REQUIREMENTS OF SUBSECTION 711.01. ALL COSTS ASSOCIATED WITH PLACING THE CORRUGATED STEEL PIPE WILL BE INCLUDED IN THE BID PRICE FOR ITEM 540.10, "PRECAST CONCRETE STRUCTURE (ABUTMENT #1)" AND ITEM 540.10, "PRECAST CONCRETE STRUCTURE (ABUTMENT #2)".
22. WATERSTOPS WILL BE PLACED AT THE JOINT BETWEEN THE PRECAST ABUTMENTS AND THE CAST-IN-PLACE CLOSURE POURS.
23. PROPOSED SEQUENCE OF CONSTRUCTION:
    A. PREPARE AND GRADE FOUNDATION TO REQUIRED ELEVATION.
    B. DRIVE PILES.
    C. PLACE PRECAST ABUTMENTS.
    D. CHECK ALIGNMENT OF ABUTMENT ELEMENTS.
    E. FILL PILE CAVITIES WITH ITEM 900.608, "SPECIAL PROVISION (HIGH PERFORMANCE CONCRETE, RAPID SET)".
    F. PLACE PRECAST WINGWALLS AND GROUT SPLICE CONNECTORS.
    G. BACKFILL ABUTMENTS AFTER SPLICE CONNECTOR GROUT HAS REACHED 85% OF 5000 PSI.
24. ALTERNATE SEQUENCE OF CONSTRUCTION MAY BE SUBMITTED FOR APPROVAL BY THE PROJECT MANAGER.

CONCRETE:

25. WATER REPELLENT, SILANE, WILL BE APPLIED TO ALL EXPOSED CONCRETE (CAST-IN-PLACE AND PRECAST) SURFACES, EXCEPT THE BOTTOM FACES OF THE PRECAST NEXT BEAMS BETWEEN DRIP NOTCHES. SILANE WILL BE APPLIED ON ALL EXPOSED SURFACES TO 1'-0" (MIN.) BELOW FINISH GRADE. SILANE FOR PRECAST ITEMS WILL BE FIELD APPLIED AND ALL WORK WILL BE COMPLETED WITHIN 40 DAYS OF THE ORIGINAL CONCRETE PLACEMENT. PAYMENT FOR SILANE WILL BE MADE UNDER ITEM 514.10 "WATER REPELLENT, SILANE".
26. ALL PRECAST SUBSTRUCTURE COMPONENTS, NEXT BEAMS, AND APPROACH SLABS WILL MEET THE CONCRETE REQUIREMENTS OF SECTION 540 - PRECAST CONCRETE.
27. THE CONNECTION BETWEEN ADJACENT APPROACH SLABS WILL MEET THE REQUIREMENTS OF ITEM 900.608, "SPECIAL PROVISION (HIGH PERFORMANCE CONCRETE, RAPID SET) (FPQ)".
28. THE CLOSURE POUR WILL BE CAST ONTO THE ENDS OF THE NEXT BEAMS BY THE CONTRACTOR. ENDS OF THE NEXT BEAMS IN CONTACT WITH THE CLOSURE POUR WILL BE TREATED WITH CONCRETE SURFACE RETARDER, OR SIMILAR, TO PROVIDE A ROUGHENED SURFACE; AND WILL BE POWER WASHED WITH WATER PRIOR TO THE PLACEMENT OF THE CLOSURE POUR. PAYMENT FOR THE CLOSURE POUR WILL BE INCLUDED IN ITEM 900.608 "SPECIAL PROVISION (HIGH PERFORMANCE CONCRETE, RAPID SET) (FPQ)".

REINFORCEMENT:

29. ALL REINFORCING STEEL WILL BE DETAILED AND FABRICATED USING PROCEDURES AND TOLERANCES IN ACCORDANCE WITH APPLICABLE PUBLICATIONS OF THE "CONCRETE REINFORCING STEEL INSTITUTE".
30. REINFORCING STEEL PLACEMENT TOLERANCES WILL BE:
    SPACING: +/- 1 INCH
    CLEARANCE/COVER: +/- ¼ INCH
31. ALL REINFORCEMENT IN THE PRECAST APPROACH SLAB UNITS WILL ADHERE TO THE REQUIREMENTS OF LEVEL I REINFORCING STEEL IN ACCORDANCE WITH SECTION 507. ALL OTHER REINFORCING STEEL WILL ADHERE TO THE REQUIREMENTS OF LEVEL II REINFORCING STEEL IN ACCORDANCE WITH SECTION 507.
32. ALL MECHANICAL CONNECTORS IN ABUTMENTS AND WINGWALLS WILL BE GROUTED SPLICE COUPLERS. ALL MECHANICAL CONNECTORS WILL BE CAPABLE OF ATTAINING 125% OF THE SPECIFIED YIELD STRENGTH OF THE REINFORCING BAR BEING SPLICED. ADDITIONAL MECHANICAL CONNECTORS WILL BE PROVIDED TO VTRANS FOR THE PURPOSE OF MATERIAL TESTING.
33. GROUTED SPLICE COUPLERS WILL HAVE A CLEAR COVER OF 3" UNLESS SPECIFIED OTHERWISE ON THE PLANS. CLEAR COVER WILL BE DETAILED ON THE FABRICATION DRAWINGS. DIAMETER OF GROUTED SPLICE COUPLERS WILL BE PER MANUFACTURER STANDARD.
34. GROUT FOR GROUTED SPLICE COUPLERS WILL MEET THE REQUIREMENTS OF SUBSECTION 540.11. GROUT AND PLASTIC SHIMS, INCLUDING INSTALLATION, WILL BE INCIDENTAL TO THE APPROPRIATE PRECAST UNIT PAID UNDER ITEM 540.10.
35. PRECAST FABRICATOR WILL PROVIDE TEMPLATES OF ACTUAL GROUTED SPLICE COUPLER LOCATIONS IN THE ABUTMENTS AND WINGWALLS TO THE CONTRACTOR FOR THE PURPOSE OF PLACING REINFORCEMENT TO MATCH.
36. ALL REINFORCMENT WILL HAVE A CLEAR COVER OF 3" UNLESS SPECIFIED OTHERWISE ON THE PLANS.

NEXT D BEAMS:

37. NEXT D BEAMS ARE A NON-PROPRIETARY SHAPE DEVELOPED BY PCI NORTHEAST ("PCINE"). STANDARDIZED SECTION PROPERTIES AND DETAILS MAY BE FOUND AT http://www.pcine.org.
38. DESIGN VALUES:
    A. CONCRETE COMPRESSIVE STRENGTH: F'C = 8000 PSI
    B. CONCRETE COMPRESSIVE STRENGTH AT RELEASE: F'CI = 6000 PSI
    C. PRESTRESSING STRANDS: 0.6 INCH DIAMETER, 270 KSI, LOW-RELAXATION 7-STRAND WIRES
    D. ASSUMED JACKING FORCE PER STRAND = 44 KIPS
    E. ASSUMED MODULUS OF ELASTICITY = 5586 KSI
    F. SERVICE LOADS: EXTERIOR BEAM

MEMBER MOMENT	714 K-FT
SUPERIMPOSED DEAD LOAD MOMENT	236 K-FT
LIVE LOAD AND IMPACT MOMENT	1213 K-FT
DEAD LOAD REACTION	62 KIP
LIVE LOAD AND IMPACT REACTION	87 KIP
TOTAL REACTION	149 KIP

CONCRETE		REINFORCING STEEL	
ELEMENT:	CONTRACT ITEM:	CORROSION RESISTANCE:	PAYMENT TO BE INCLUDED IN:
NEXT BEAMS (F'C = 8000PSI)	ITEM 900.640, "SPECIAL PROVISION (PRESTRESSED CONCRETE NEXT D BEAMS) (NEXT28D)"	REINFORCING STEEL, LEVEL II	ITEM 900.640, "SPECIAL PROVISION (PRESTRESSED CONCRETE NEXT D BEAMS) (NEXT28D)"
PRECAST PILECAPS (F'C = 5000PSI)	ITEM 540.10, "PRECAST CONCRETE STRUCTURE (ABUTMENT #1/#2)"	REINFORCING STEEL, LEVEL II	ITEM 540.10, "PRECAST CONCRETE STRUCTURE (ABUTMENT #1/#2)"
CAST IN PLACE CONCRETE *	ITEM 900.608, "SPECIAL PROVISION (HIGH PERFORMANCE CONCRETE, RAPID SET) (FPQ)"	REINFORCING STEEL, LEVEL II	ITEM 507.12, "REINFORCING STEEL, LEVEL II"
APPROACH SLABS (F'C = 5000PSI)	ITEM 540.10, "PRECAST CONCRETE STRUCTURE (APPROACH SLAB #1/#2)"	REINFORCING STEEL, LEVEL I	ITEM 540.10, "PRECAST CONCRETE STRUCTURE (APPROACH SLAB #1/#2)

* CAST-IN-PLACE CONCRETE SHALL INCLUDE ALL CONCRETE PLACED INTEGRALLY WITH THE SUPERSTRUCTURE AND APPROACH SLABS INCLUDING BEAM-END CLOSURE POURS, DECK CLOSURE POURS, APPROACH SLAB CLOSURE POURS, AND SUBSTRUCTURE CONCRETE FOR PILE CAVITIES AS DETAILED IN PLANS.

PARSONS BRINCKERHOFF
650 ELM STREET
MANCHESTER, NH 03101

PROJECT NAME: CALAIS
PROJECT NUMBER: BHF 037-2(10)

FILE NAME: z12b148gennotes.dgn
PROJECT LEADER: G.K.DONINGTON
DESIGNED BY: S.BROWN
PROJECT NOTES (1) OF (2)

PLOT DATE: 31-JULY-2015
DRAWN BY: S.BROWN
CHECKED BY: A.STOCKIN
SHEET 6 OF 53

G. SERVICE LOADS: INTERIOR BEAM

MEMBER MOMENT	714 K-FT
SUPERIMPOSED DEAD LOAD MOMENT	209 K-FT
LIVE LOAD AND IMPACT MOMENT	947 K-FT
DEAD LOAD REACTION	60 KIP
LIVE LOAD AND IMPACT REACTION	89.0 KIP
TOTAL REACTION	149 KIP

39. PRESTRESS WILL NOT BE TRANSFERRED TO THE CONCRETE UNTIL THE CONCRETE HAS ATTAINED A COMPRESSIVE STRENGTH, AS SHOWN BY CYLINDER TEST, OF AT LEAST F'CI = 6 KSI (MINIMUM RELEASE STRENGTH).
40. BEAMS SHALL ATTAIN A MINIMUM AGE OF 60 DAYS PRIOR TO ERECTION.
41. ENDS OF FLANGES IN CONTACT WITH LONGITUDINAL JOINT WILL BE TREATED WITH CONCRETE SURFACE RETARDER, OR SIMILAR, TO PROVIDE A ROUGHENED SURFACE; AND WILL BE POWER WASHED WITH WATER PRIOR TO BEING ERECTED.
42. THE FLANGE TO FLANGE LONTIDUINAL BEAM JOINT WILL BE FORMED USING ITEM 900.608 "SPECIAL PROVISION (HIGH PERFORMANCE CONCRETE, RAPID SET) (FPQ)".
43. CONTRACTOR SHALL DETERMINE THE METHOD OF FORMING THE FLANGE CONNECTION. FORMS FOR LONGITUDINAL BEAM JOINTS WILL BE REMOVABLE AND ABLE TO ACCOMMODATE DIFFERENTIAL CAMBER. FORM SUPPORTS SHALL NOT BE ATTACHED TO ANY PREFABRICATED SUPERSTRUCTURE ELEMENT BY DRILLING OR SIMILAR MEANS.
44. THE FABRICATOR MAY ALTER THE DESIGN AS DETAILED IN THESE PLANS TO ACCOMMODATE THEIR SPECIFIC OPERATION. THIS ALTERATION WILL BE DESIGNED BY A PROFESSIONAL ENGINEER REGISTERED IN THE STATE OF VERMONT TO MEET THE ABOVE CRITERIA AND WILL BE APPROVED BY THE PROJECT MANAGER.
45. NEXT BEAMS WILL BE PAID FOR AS ITEM 900.640, "SPECIAL PROVISION (PRESTRESSED CONCRETE NEXT D BEAMS) (NEXT 28 D)".
46. THE FABRICATOR IS FULLY RESPONSIBLE FOR THE DESIGN OF THE LIFTING DEVICES, WHICH WILL BE ADEQUATE FOR THE SAFETY FACTORS REQUIRED BY THE ERECTION PLAN.
47. THE WEARING SURFACE WILL BE SHIMMED TRANSVERSELY AS NECESSARY TO ACCOUNT FOR POTENTIAL DIFFERENTIAL CAMBER OF THE ADJACENT BEAMS. THE WEARING SURFACE SHALL NOT BE SHIMMED LONGITUDINALLY ALONG THE BRIDGE TO ACCOUNT FOR THE DIFFERENCE BETWEEN BEAM CAMBER AND THE THEORETICAL ROADWAY PROFILE.
48. VALUES FOR MIDSPAN CAMBER AT TRANSFER WILL BE DETAILED ON THE FABRICATION DRAWINGS.
49. TOPS OF PRECAST PILE CAPS AND 3 5/8" ELASTOMERIC BEARING PADS WILL BE INSTALLED AT SPECIFIED BEAM SEAT ELEVATIONS.
50. CONTRACTOR SHALL TAKE MEASURES TO ENSURE THAT DIFFERENTIAL CAMBER BETWEEN ADJACENT BEAMS IS MINIMIZED DURING CONSTRUCTION.

H-PILES:

51. THE PILES WILL BE HP 12 X 84 AT EACH ABUTMENT, IN CONFORMANCE WITH AASHTO M 572 GRADE 50.
52. TO PREVENT DAMAGE TO THE PILES, PILE SHOES ARE REQUIRED AND WILL CONFORM TO SUBSECTION 505.04(F).
53. STRESSES IN THE PILE DURING DRIVING WILL NOT EXCEED THE MAXIMUM DRIVING STRESS.THE MAXIMUM DRIVING STRESS WILL BE DETERMINED AS 90 PERCENT OF THE PILE STEEL STRENGTH MULTIPLIED BY A RESISTANCE FACTOR OF 1.00.
54. THE PILES WILL BE DRIVEN TO REFUSAL ON BEDROCK. A NOMINAL PILE DRIVING RESISTANCE (RNDR) OF 480 KIPS IS REQUIRED BY DESIGN, AS DETERMINED BY THE RESULTS OF DYNAMIC TESTING, AND AS INTERPRETED BY THE ENGINEER, AND TO A MINIMUM DEPTH OF 45 FEET BELOW THE BOTTOM OF THE PRECAST ABUTMENT. NO PILE SPLICES WILL BE ALLOWED ABOVE THIS MINIMUM DEPTH.
55. TO ENSURE THAT THE NOMINAL CAPACITY HAS BEEN ATTAINED AND TO PREVENT THE OVERSTRESSING OF THE PILES DURING DRIVING OPERATIONS, DYNAMIC TESTING WILL BE PERFORMED IN ACCORDANCE WITH SUBSECTION 505.04. ONE DYNAMIC PILE TEST WILL BE CONDUCTED ON THE FIRST PILE DRIVEN AT EACH ABUTMENT. MORE TESTS MAY BE ORDERED BY THE ENGINEER. ADDITIONAL TEST(S) ORDERED BY THE ENGINEER WILL BE PAID FOR AT THE UNIT PRICE BID FOR CONTRACT ITEM 505.45.
56. THE TOPS OF THE PILES AFTER DRIVING WILL NOT VARY FROM THE POSITION SHOWN ON THE PLANS BY MORE THAN 3 INCHES. THE PILE ORIENTATION WILL NOT VARY BY MORE THAN 5 DEGREES. THE CONTRACTOR WILL DEMONSTRATE TO THE SATISFACTION OF THE ENGINEER HOW THE TOLERANCES WILL BE MET. THESE MEASURES WILL BE DEMONSTRATED IN A SUBMITTAL TO BE ACCEPTED BEFORE PILE DRIVING COMMENCES.
57. FOR ESTIMATING PURPOSES, THE PILE TIP ELEVATIONS WERE ASSUMED TO BE AS SHOWN ON THE BORING LOGS. THE ACTUAL IN PLACE LENGTH MAY VARY.
58. PAYMENT FOR PRE-EXCAVATION WILL BE MADE UNDER ITEM 900.640, "SPECIAL PROVISION (PRE-EXCAVATION OF INTEGRAL ABUTMENT PILES, EARTH)". THE ENTIRE PRE-EXCAVATED HOLE WILL BE BACKFILLED WITH SAND AFTER THE PILE IS SET. SAND WILL CONFORM TO THE REQUIREMENTS OF SUBSECTION 703.03. REFER TO THE SPEICAL PROVISIONS FOR ADDITIONAL INFORMATION.

GENERAL INFORMATION

SYMBOLOGY LEGEND NOTE

THE SYMBOLOGY ON THIS SHEET IS INTENDED TO COVER STANDARD CONVENTIONAL SYMBOLOGY. THE SYMBOLOGY IS USED FOR EXISTING & PROPOSED FEATURES WITH HEAVIER LINEWEIGHT, IN COMBINATION WITH PROJECT ANNOTATION, AS NOTED ON PROJECT PLAN SHEETS. THIS LEGEND SHEET COVERS THE BASICS. SYMBOLOGY ON PLANS MAY VARY, PLAN ANNOTATIONS AND NOTES SHOULD BE USED TO CLARIFY AS NEEDED.

R.O.W. ABBREVIATIONS (CODES) & SYMBOLS

POINT	CODE	DESCRIPTION
	CH	CHANNEL EASEMENT
	CONST	CONSTRUCTION EASEMENT
	CUL	CULVERT EASEMENT
	D&C	DISCONNECT & CONNECT
	DIT	DITCH EASEMENT
	DR	DRAINAGE EASEMENT
	DRIVE	DRIVEWAY EASEMENT
	EC	EROSION CONTROL
	HWY	HIGHWAY EASEMENT
	I&M	INSTALL & MAINTAIN EASEMENT
	LAND	LANDSCAPE EASEMENT
	R&RES	REMOVE & RESET
	R&REP	REMOVE & REPLACE
	SR	SLOPE RIGHT
	UE	UTILITY EASEMENT
	(P)	PERMANENT EASEMENT
	(T)	TEMPORARY EASEMENT
■	BNDNS	BOUND SET
⊡	BNDNS	BOUND TO BE SET
●	IPNS	IRON PIN SET
◎	IPNS	IRON PIN TO BE SET
⊠	CALC	EXISTING ROW POINT
○	PROW	PROPOSED ROW POINT
[LENGTH]		LENGTH CARRIED ON NEXT SHEET

COMMON TOPOGRAPHIC POINT SYMBOLS

POINT	CODE	DESCRIPTION
	APL	BOUND APPARENT LOCATION
	BM	BENCH MARK
	BND	BOUND
	CB	CATCH BASIN
	COMB	COMBINATION POLE
	DITHR	DROP INLET THROATED DNC
	EL	ELECTRIC POWER POLE
	FPOLE	FLAGPOLE
	GASFIL	GAS FILLER
	GP	GUIDE POST
	GSO	GAS SHUT OFF
	GUY	GUY POLE
	GUYW	GUY WIRE
	GV	GATE VALUE
	H	TREE HARDWOOD
	HCTRL	CONTROL HORIZONTAL
	HVCTRL	CONTROL HORIZ. & VERTICAL
	HYD	HYDRANT
	IP	IRON PIN
	IPIPE	IRON PIPE
	LI	LIGHT - STREET OR YARD
	MB	MAILBOX
	MH	MANHOLE (MH)
	MM	MILE MARKER
	PM	PARKING METER
	PMK	PROJECT MARKER
	POST	POST STONE/WOOD
	RRSIG	RAILROAD SIGNAL
	RRSL	RAILROAD SWITCH LEVER
	S	TREE SOFTWOOD
	SAT	SATELLITE DISH
	SHRUB	SHRUB
	SIGN	SIGN
	STUMP	STUMP
	TEL	TELEPHONE POLE
	TIE	TIE
	TSIGN	SIGN W/DOUBLE POST
	VCTRL	CONTROL VERTICAL
	WELL	WELL
	WSO	WATER SHUT OFF

THESE ARE COMMON VAOT SURVEY POINT SYMBOLS FOR EXISTING FEATURES, ALSO USED FOR PROPOSED FEATURES WITH HEAVIER LINEWEIGHT, IN COMBINATION WITH PROPOSED ANNOTATION.

PROPOSED GEOMETRY CODES

CODE	DESCRIPTION
PC	POINT OF CURVATURE
PI	POINT OF INTERSECTION
CC	CENTER OF CURVE
PT	POINT OF TANGENCY
PCC	POINT OF COMPOUND CURVE
PRC	POINT OF REVERSE CURVE
POB	POINT OF BEGINNING
POE	POINT OF ENDING
STA	STATION PREFIX
AH	AHEAD STATION SUFFIX
BK	BACK STATION SUFFIX
D	CURVE DEGREE OF (100FT)
R	CURVE RADUIS OF
T	CURVE TANGENT LENGTH
L	CURVE LENGTH OF
E	CURVE EXTERNAL DISTANCE

UTILITY SYMBOLOGY

UNDERGROUND UTILITIES

UT	TELEPHONE
UE	ELECTRIC
UTV	CABLE (TV)
	ELECTRIC+CABLE
	ELECTRIC+TELEPHONE
	CABLE+TELEPHONE
	ELECTRIC+CABLE+TELEP.
G	GAS LINE
W	WATER LINE
S	SANITARY SEWER (SEPTIC)

ABOVE GROUND UTILITIES (AERIAL)

T	TELEPHONE
E	ELECTRIC
	CABLE (TV)
	ELECTRIC+CABLE
	ELECTRIC+TELEPHONE
AER E&T	ELECTRIC+TELEPHONE
	CABLE+TELEPHONE
	ELECTRIC+CABLE+TELEP.
	UTILITY POLE GUY WIRE

PROJECT CONSTRUCTION SYMBOLOGY

PROJECT DESIGN & LAYOUT SYMBOLOGY

CZ	CLEAR ZONE
	PLAN LAYOUT MATCHLINE

PROJECT CONSTRUCTION FEATURES

	TOP OF CUT SLOPE
	TOE OF FILL SLOPE
	STONE FILL
	BOTTOM OF DITCH ℄
	CULVERT PROPOSED
	STRUCTURE SUBSURFACE
PDF PDF	PROJECT DEMARCATION FENCE
	BARRIER FENCE
	TREE PROTECTION ZONE (TPZ)
	STRIPING LINE REMOVAL
	SHEET PILES

CONVENTIONAL BOUNDARY SYMBOLOGY

BOUNDARY LINES

TOWN LINE	TOWN BOUNDARY LINE
COUNTY LINE	COUNTY BOUNDARY LINE
STATE LINE	STATE BOUNDARY LINE
	PROPOSED STATE R.O.W. (LIMITED ACCESS)
	PROPOSED STATE R.O.W.
	STATE ROW (LIMITED ACCESS)
	STATE ROW
	TOWN ROW
	PERMANENT EASEMENT LINE (P)
	TEMPORARY EASEMENT LINE (T)
	SURVEY LINE
P L P L	PROPERTY LINE (P/L)
SR SR SR	SLOPE RIGHTS
6f 6f	6F PROPERTY BOUNDARY
4f 4f	4F PROPERTY BOUNDARY
HAZ HAZ	HAZARDOUS WASTE

EPSC LAYOUT PLAN SYMBOLOGY

EPSC MEASURES

	FILTER CURTAIN
	SILT FENCE
	SILT FENCE WOVEN WIRE
	CHECK DAM
	DISTURBED AREAS REQUIRING RE-VEGETATION
	EROSION MATTING

ENVIRONMENTAL RESOURCES

	WETLAND BOUNDARY
	RIPARIAN BUFFER ZONE
	WETLAND BUFFER ZONE
	SOIL TYPE BOUNDARY
T&E	THREATENED & ENDANGERED SPECIES
HAZ HAZ	HAZARDOUS WASTE AREA
AG	AGRICULTURAL LAND
HABITAT	FISH & WILDLIFE HABITAT
FLOOD PLAIN	FLOOD PLAIN
OHW	ORDINARY HIGH WATER (OHW)
	STORM WATER
	USDA FOREST SERVICE LANDS
	WILDLIFE HABITAT SUIT/CONN

ARCHEOLOGICAL & HISTORIC

ARCH	ARCHEOLOGICAL BOUNDARY
HISTORIC DIST	HISTORIC DISTRICT BOUNDARY
HISTORIC	HISTORIC AREA
H	HISTORIC STRUCTURE

CONVENTIONAL TOPOGRAPHIC SYMBOLOGY

EXISTING FEATURES

	ROAD EDGE PAVEMENT
	ROAD EDGE GRAVEL
	DRIVEWAY EDGE
	DITCH
	FOUNDATION
	FENCE (EXISTING)
	FENCE WOOD POST
	FENCE STEEL POST
	GARDEN
	ROAD GUARDRAIL
	RAILROAD TRACKS
	CULVERT (EXISTING)
	STONE WALL
	WALL
	WOOD LINE
	BRUSH LINE
	HEDGE
	BODY OF WATER EDGE
	LEDGE EXPOSED

PROJECT NAME: CALAIS
PROJECT NUMBER: BHF 037-2(10)

PARSONS BRINCKERHOFF
650 ELM STREET
MANCHESTER, NH 03101

FILE NAME: z12b144lgnd.dgn
PROJECT LEADER: G.K.DONINGTON
DESIGNED BY: S.BROWN
LEGEND SHEET

PLOT DATE: 31-JULY-2015
DRAWN BY: S.BROWN
CHECKED BY: A.STOCKIN
SHEET 8 OF 53

STATE OF VERMONT
AGENCY OF TRANSPORTATION

QUANTITY SHEET 1

SUMMARY OF ESTIMATED QUANTITIES									TOTALS		DESCRIPTIONS				DETAILED SUMMARY OF QUANTITIES		
	ROADWAY	TRAINING	LANDSCAPING	EROSION CONTROL	BRIDGE	FULL C.E. ITEMS	GRAND TOTAL	FINAL	UNIT	ITEMS	ITEM NUMBER	ROUND	QUANTITIES	UNIT	ITEMS
	1						1		LS	CLEARING AND GRUBBING, INCLUDING INDIVIDUAL TREES AND STUMPS	201.10				
	2018						2018		CY	COMMON EXCAVATION	203.15				
					525		525		CY	UNCLASSIFIED CHANNEL EXCAVATION	203.27				
	548						548		CY	SAND BORROW	203.31				
	1						1		CY	TRENCH EXCAVATION OF EARTH, EXPLORATORY (N.A.B.I.)	204.22				
					455		455		CY	STRUCTURE EXCAVATION	204.25				
					250		250		CY	GRANULAR BACKFILL FOR STRUCTURES	204.30				
	335						335		SY	COLD PLANING, BITUMINOUS PAVEMENT	210.10				
	1032						1032		CY	SUBBASE OF DENSE GRADED CRUSHED STONE	301.35				
	11						11		CWT	EMULSIFIED ASPHALT	404.65				
	550						550		TON	BITUMINOUS CONCRETE PAVEMENT	406.25				
	1						1		LU	PRICE ADJUSTMENT, ASPHALT CEMENT (N.A.B.I.)	406.50				
					1		1		LS	FURNISHING EQUIPMENT FOR DRIVING PILING	504.10				
					929		929		LF	STEEL PILING, HP 12 X 84	505.165				
					2		2		EACH	DYNAMIC PILE LOADING TEST	505.45				
					5050		5050		LB	REINFORCING STEEL, LEVEL II	507.12				
					316		316		EACH	MECHANICAL BAR CONNECTOR	507.19				
					6		6		GAL	WATER REPELLENT, SILANE	514.10				
					64		64		LF	BRIDGE EXPANSION JOINT, ASPHALTIC PLUG	516.10				
					227		227		SY	MEMBRANE WATERPROOFING, SPRAY APPLIED	520.10				
					64		64		LF	JOINT SEALER, HOT POURED	524.11				
					135		135		LF	BRIDGE RAILING, GALVANIZED 3 RAIL BOX BEAM	525.335				
					1		1		EACH	REMOVAL OF STRUCTURE (1500 SF - EST.)	529.15				
					16		16		EACH	BEARING DEVICE ASSEMBLY, STEEL REINFORCED ELASTOMERIC PAD	531.17				
					1		1		LS	PRECAST CONCRETE STRUCTURE (ABUTMENT #1)	540.10				
					1		1		LS	PRECAST CONCRETE STRUCTURE (ABUTMENT #2)	540.10				
					1		1		LS	PRECAST CONCRETE STRUCTURE (APPROACH SLAB #1)	540.10				
					1		1		LS	PRECAST CONCRETE STRUCTURE (APPROACH SLAB #2)	540.10				
	250						250		LF	6 INCH UNDERDRAIN PIPE	605.10				
	2						2		EACH	UNDERDRAIN FLUSHING BASIN	605.95				
	1						1		MGAL	DUST CONTROL WITH WATER	609.10				
					300		300		CY	STONE FILL, TYPE III	613.12				
	2						2		EACH	STEEL MARKER POSTS	619.16				
	150						150		LF	BOX BEAM GUARDRAIL	621.30				
	1						1		EACH	MANUFACTURED TERMINAL SECTION, FLARED	621.50				
	3						3		EACH	MANUFACTURED TERMINAL SECTION, TANGENT	621.51				
	1						1		EACH	ENERGY ABSORPTION ATTENUATOR, SAND-FILLED PLASTIC BARREL	621.57				
	4						4		EACH	GUARDRAIL APPROACH SECTION, GALVANIZED 3 RAIL BOX BEAM	621.725				
	250						250		LF	REMOVAL AND DISPOSAL OF GUARDRAIL	621.80				
	230						230		LF	TEMPORARY TRAFFIC BARRIER	621.90				

PARSONS BRINCKERHOFF
650 ELM STREET
MANCHESTER, NH 03101

PROJECT NAME: CALAIS
PROJECT NUMBER: BHF 037-2(10)

FILE NAME: z12b1440S.dgn
PROJECT LEADER: G.K.DONINGTON
DESIGNED BY: S.BROWN
QUANTITIY SHEET (1) OF (3)

PLOT DATE: 31-JULY-2015
DRAWN BY: S.BROWN
CHECKED BY: A.STOCKIN
SHEET 9 OF 53

STATE OF VERMONT
AGENCY OF TRANSPORTATION

QUANTITY SHEET 2

SUMMARY OF ESTIMATED QUANTITIES									TOTALS		DESCRIPTIONS				DETAILED SUMMARY OF QUANTITIES		
	ROADWAY	TRAINING	LANDSCAPING	EROSION CONTROL	BRIDGE	FULL C.E. ITEMS	GRAND TOTAL	FINAL	UNIT	ITEMS	ITEM NUMBER	ROUND	QUANTITIES	UNIT	ITEMS
	230						230		LF	REMOVE AND RESET TEMPORARY TRAFFIC BARRIER	621.95				
	120						120		HR	UNIFORMED TRAFFIC OFFICERS	630.10				
	480						480		HR	FLAGGERS	630.15				
						1	1		LS	FIELD OFFICE, ENGINEERS	631.10				
						1	1		LS	TESTING EQUIPMENT, CONCRETE	631.16				
						1	1		LS	TESTING EQUIPMENT, BITUMINOUS	631.17				
						3000	3000		DL	FIELD OFFICE TELEPHONE (N.A.B.I.)	631.26				
		1040					1040		HR	EMPLOYEE TRAINEESHIP	634.10				
	1						1		LS	MOBILIZATION/DEMOBILIZATION	635.11				
	1						1		LS	TRAFFIC CONTROL	641.10				
	2						2		EACH	PORTABLE CHANGEABLE MESSAGE SIGN	641.15				
	702						702		LF	4 INCH WHITE LINE	646.20				
	800						800		LF	4 INCH YELLOW LINE	646.21				
	240						240		LF	TEMPORARY 4 INCH WHITE LINE	646.600				
	33						33		LF	TEMPORARY 24 INCH STOP BAR	646.680				
					345		345		SY	GEOTEXTILE UNDER STONE FILL	649.31				
				207			207		SY	GEOTEXTILE FOR SILT FENCE, WOVEN WIRE REINFORCED	649.515				
				65			65		SY	GEOTEXTILE FOR FILTER CURTAIN	649.61				
			20				20		LB	SEED	651.15				
			75				75		LB	FERTILIZER	651.18				
			0.3				0.3		TON	AGRICULTURAL LIMESTONE	651.20				
			0.3				0.3		TON	HAY MULCH	651.25				
			40				40		CY	TOPSOIL	651.35				
			220				220		SY	GRUBBING MATERIAL	651.40				
				1			1		LS	EPSC PLAN	652.10				
				40			40		HR	MONITORING EPSC PLAN	652.20				
				1			1		LU	MAINTENANCE OF EPSC PLAN (N.A.B.I.)	652.30				
				120			120		SY	TEMPORARY EROSION MATTING	653.20				
				110			110		CY	VEHICLE TRACKING PAD	653.35				
				2			2		EACH	FILTER BAG	653.45				
				775			775		LF	PROJECT DEMARCATION FENCE	653.55				
	68						68		SF	TRAFFIC SIGNS, TYPE A	675.20				
	70						70		LF	SQUARE TUBE SIGN POST AND ANCHOR	675.341				
	6						6		EACH	REMOVING SIGNS	675.50				
	3						3		EACH	TEMPORARY TRAFFIC SIGNAL SYSTEM	678.40				
	1						1		LU	PRICE ADJUSTMENT, FUEL (N.A.B.I.)	690.50				
					42		42		CY	SPECIAL PROVISION (HIGH PERFORMANCE CONCRETE, RAPID SET)(FPQ)	900.608				
					8		8		EACH	SPECIAL PROVISION (CPM SCHEDULE)	900.620				
					254		254		LF	SPECIAL PROVISION (PRESTRESSED CONCRETE NEXT D BEAMS)(NEXT 28D)	900.640				
					1		1		LU	SPECIAL PROVISION (INCENTIVE/DISINCENTIVE) (N.A.B.I)	900.650				

PROJECT NAME: CALAIS
PROJECT NUMBER: BHF 037-2(10)

PARSONS BRINCKERHOFF
650 ELM STREET
MANCHESTER, NH 03101

FILE NAME: z12b1440S.dgn
PROJECT LEADER: G.K.DONINGTON
DESIGNED BY: S.BROWN
QUANTITIY SHEET (2) OF (3)

PLOT DATE: 31-JULY-2015
DRAWN BY: S.BROWN
CHECKED BY: A.STOCKIN
SHEET 10 OF 53

STATE OF VERMONT
AGENCY OF TRANSPORTATION

QUANTITY SHEET 3

SUMMARY OF ESTIMATED QUANTITIES											TOTALS		DESCRIPTIONS				DETAILED SUMMARY OF QUANTITIES		
				ROADWAY	TRAINING	LANDSCAPING	EROSION CONTROL	BRIDGE	FULL C.E. ITEMS	GRAND TOTAL	FINAL	UNIT	ITEMS	ITEM NUMBER	ROUND	QUANTITIES	UNIT	ITEMS
				1						1		LU	SPECIAL PROVISION (MIXTURE PAY ADJUSTMENT)(N.A.B.I)	900.650				

PROJECT NAME: CALAIS
PROJECT NUMBER: BHF 037-2(10)

PARSONS BRINCKERHOFF
650 ELM STREET
MANCHESTER, NH 03101

FILE NAME: z12b1440S.dgn
PROJECT LEADER: G.K.DONINGTON
DESIGNED BY: S.BROWN
QUANTITIY SHEET (3) OF (3)

PLOT DATE: 31-JULY-2015
DRAWN BY: S.BROWN
CHECKED BY: A.STOCKIN
SHEET 11 OF 53

GPS CONTROL POINTS

HVCTRL #1

C772

NORTH = 678423.820
EAST = 1656887.650
ELEV. = 758.090

GENERAL LOCATION: CALAIS
FROM THE JUNCTION OF VT 14 AND VT 214 IN N. MONTPELIER PROCEED NORTHERLY ALONG VT 14 FOR APPROXIMATELY 4.3 MI. TO THE MARK ON THE LEFT, OPPOSITE POLE #196/148. THE MARK IS A 3/4" REBAR SET FLUSH WITH ALUMINUM CAP MARKED "CONTROL POINT".

HVCTRL #2

C771

NORTH = 677337.090
EAST = 1655841.470
ELEV. = 753.390

GENERAL LOCATION: CALAIS
FROM THE JUNCTION OF VT 14 AND VT 214 IN N. MONTPELIER PROCEED NORTHERLY ALONG VT 14 FOR APPROXIMATELY 4.1 MI. TO THE MARK ON THE RIGHT, 37' SOUTHERLY OF MILE MARKER 0140/1205/0380. THE MARK IS A 3/4" REBAR SET FLUSH WITH ALUMINUM CAP MARKED "CONTROL POINT".

GPS CONTROL POINTS

HVCTRL #10

CA74

NORTH = 668262.570
EAST = 1654558.010
ELEV. = 717.570

GENERAL LOCATION: CALAIS
FROM THE JUNCTION OF VT 14 AND VT 214 IN N. MONTPELIER PROCEED NORTHERLY ALONG VT 14 FOR APPROXIMATELY 2.1 MI. TO THE MARK ON THE LEFT, OPPOSITE POLE #118/68. THE MARK IS A 3/4" REBAR SET FLUSH WITH ALUMINUM CAP MARKED "CONTROL POINT".

TRAVERSE TIES

HVCTRL #8

NORTH = 669609.832
EAST = 1654869.281
ELEV. = 751.698

NOT TIED

HVCTRL #9

NORTH = 669218.004
EAST = 1654874.978
ELEV. = 742.696

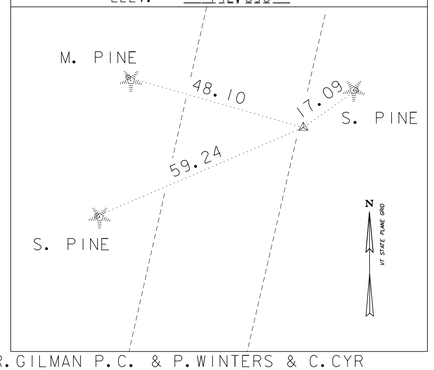

HVCTRL #10

NORTH = 668262.570
EAST = 1654558.010
ELEV. = 717.570

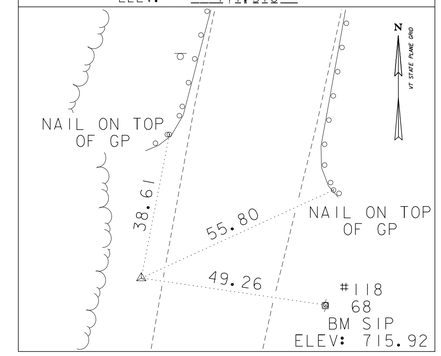

* MAIN TRAVERSE COMPLETED 5/30/2012 BY R.GILMAN P.C. & P.WINTERS & C.CYR

ALIGNMENT TIES
VT ROUTE 14

POB 111+78.30

NORTH = 668023.961
EAST = 1654535.068
ELEV. = _____

NOT TIED

PC 113+31.36

NORTH = 668174.727
EAST = 1654561.483
ELEV. = ----------

NOT TIED

PT 114+82.12

NORTH = 668322.475
EAST = 1654591.347
ELEV. = _____

NOT TIED

PC 116+24.66

NORTH = 668461.412
EAST = 1654623.209
ELEV. = _____

NOT TIED

PT 118+84.75

NORTH = 668711.597
EAST = 1654693.919
ELEV. = _____

NOT TIED

DATUM

VERTICAL NAVD 88
HORIZONTAL NAD 83 (07)
ADJUSTMENT COMPASS

PARSONS BRINCKERHOFF
650 ELM STREET
MANCHESTER, NH 03101

PROJECT NAME: CALAIS
PROJECT NUMBER: BHE 037-2 (10)

FILE NAME: z12b144ti.dgn
PROJECT LEADER: G.K.DONINGTON
DESIGNED BY: S.BROWN
SURVEY TIE SHEET (1) OF (2)

PLOT DATE: 31-JULY-2015
DRAWN BY: S.BROWN
CHECKED BY: R.BENJAMIN
SHEET 12 OF 53

ALIGNMENT TIES
VT ROUTE 14

POE 120+53.18
NORTH = 668871.183
EAST = 1654747.775
ELEV. = ----------
NOT TIED

ALIGNMENT TIES
PEKIN BROOK ROAD

POB 60+00.00
NORTH = 668506.434
EAST = 1654481.062
ELEV. = ----------
NOT TIED

POE 61+49.36
NORTH = 668458.642
EAST = 1654622.574
ELEV. = ----------
NOT TIED

PARSONS BRINCKERHOFF
650 ELM STREET
MANCHESTER, NH 03101

PROJECT NAME: CALAIS
PROJECT NUMBER: BHF 037-2(10)

FILE NAME: s12b144ti.dgn
PROJECT LEADER: G.K.DONINGTON
DESIGNED BY: S.BROWN
SURVEY TIE SHEET (2)

PLOT DATE: 31-JULY-2015
DRAWN BY: S.BROWN
CHECKED BY: R.BENJAMIN
SHEET 13 OF 53

VT ROUTE 14
CURVE #1
DELTA= 2°58′42″
D= 1°58′33″
R= 2900.00′
T= 75.39
L= 150.75′
E= 0.98′

VT ROUTE 14
CURVE #2
DELTA= 5°43′54″
D= 2°12′13″
R= 2600.00′
T= 130.16
L= 260.09′
E= 3.26′
PT STA 118+84.74

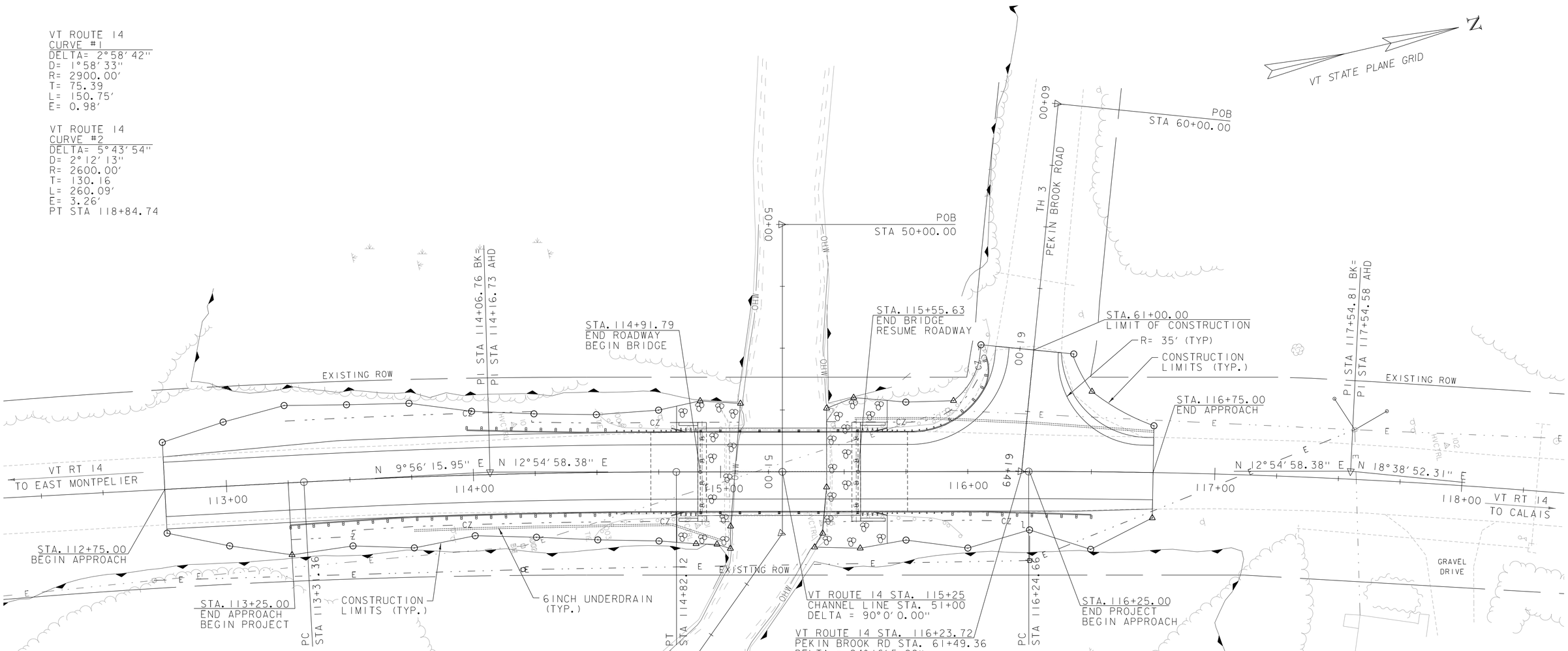

COLD PLANING, BITUMINOUS PAVEMENT
STA. 112+75 - 113+25

4 INCH YELLOW LINE (DOUBLE)
STA. 112+75 - 115+99
STA. 116+49 - 116+75

4 INCH WHITE LINE
STA. 112+75 - 116+75 RT
STA. 112+75 - 116+17 LT

REMOVAL AND DISPOSAL OF GUARDRAIL
STA. 114+50 - 115+01 LT
STA. 114+48 - 115+01 RT

MANUFACTURED TERMINAL SECTION, TANGENT
STA. 113+25 - 113+75 RT
STA. 113+98 - 114+48 LT
STA. 116+00 - 116+50 RT

GUARDRAIL TERMINAL
SECTION, FLARED
STA. 61+05 - 61+34 RT

BOX BEAM GUARDRAIL
STA. 113+75 - 114+58 RT
STA. 114+48 - 114+58 LT

GUARDRAIL APPROACH SECTION,
GALVANIZED 2 RAIL BOX BEAM
STA. 114+58 - 114+90 LT
STA. 114+58 - 114+90 RT

BRIDGE RAILING,
GALVANIZED 3 RAIL BOX BEAM
STA. 114+90 - 115+58 LT
STA. 114+90 - 115+58 RT

GUARDRAIL APPROACH SECTION,
GALVANIZED 2 RAIL BOX BEAM
STA. 115+58 - 115+89 LT
STA. 115+58 - 115+89 RT

REMOVAL AND DISPOSAL OF GUARDRAIL
STA. 115+45 - 116+08 LT
STA. 115+45 - 115+98 RT

COLD PLANING, BITUMINOUS PAVEMENT
STA. 116+25 - 116+75

4 INCH WHITE LINE
STA. 116+37 - 116+75 LT

BOX BEAM GUARDRAIL
STA. 115+89 - 116+00 RT

6 INCH UNDERDRAIN PIPE
STA. 113+75 TO 115+00 RT
STA. 115+54 TO 116+75 LT

UNDERDRAIN FLUSHING BASIN
STA. 113+75 RT 21.6′
STA. 116+75 LT 16.6′

PARSONS BRINCKERHOFF
650 ELM STREET
MANCHESTER, NH 03101

PROJECT NAME: CALAIS
PROJECT NUMBER: BHF 037-2(10)

FILE NAME: z12b144bdr.dgn
PROJECT LEADER: G.K.DONINGTON
DESIGNED BY: J.KHERA
LAYOUT SHEET

PLOT DATE: 31-JULY-2015
DRAWN BY: S.BROWN
CHECKED BY: R.BENJAMIN
SHEET 14 OF 53

PROFILE ALONG CENTERLINE VT ROUTE 14

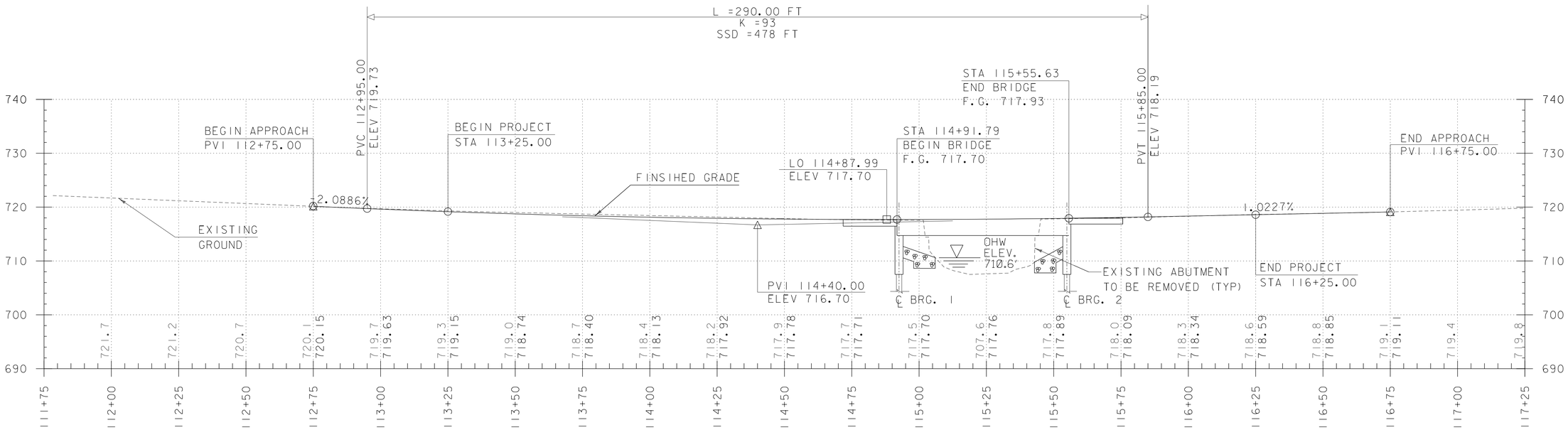

STATIONING AND ELEVATIONS ARE IN FEET

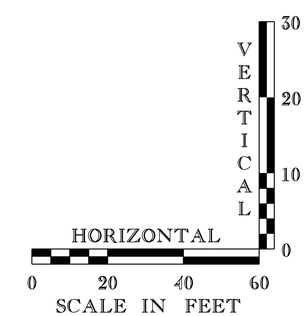

NOTE:

GRADES SHOWN TO THE NEAREST TENTH ARE EXISTING GROUND ALONG ℄

GRADES SHOWN TO THE NEAREST HUNDREDTH ARE FINISH GRADE ALONG ℄

PARSONS BRINCKERHOFF
650 ELM STREET
MANCHESTER, NH 03101

PROJECT NAME: CALAIS	
PROJECT NUMBER: BHF 037-2(10)	
FILE NAME: z12b144Pro.dgn	PLOT DATE: 31-JULY-2015
PROJECT LEADER: G.K.DONINGTON	DRAWN BY: J.KHERA
DESIGNED BY: J.KHERA	CHECKED BY: R.BENJAMIN
PROFILE SHEET (1) OF (2)	SHEET 15 OF 53

PROFILE ALONG CENTERLINE PEKIN BROOK ROAD

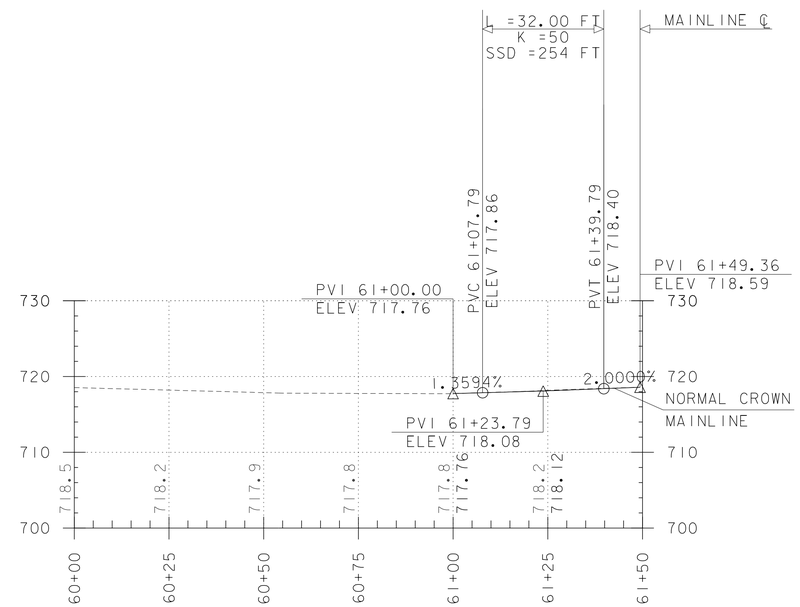

STATIONING AND ELEVATIONS ARE IN FEET

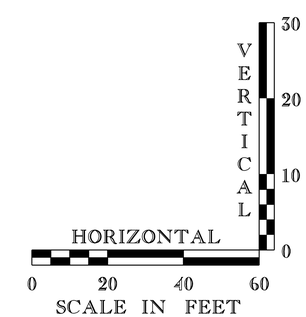

NOTE:

GRADES SHOWN TO THE NEAREST TENTH ARE EXISTING GROUND ALONG ℄

GRADES SHOWN TO THE NEAREST HUNDREDTH ARE FINISH GRADE ALONG ℄

PARSONS BRINCKERHOFF
650 ELM STREET
MANCHESTER, NH 03101

PROJECT NAME: CALAIS	
PROJECT NUMBER: BHF 037-2(10)	
FILE NAME: z12b144Pro.dgn	PLOT DATE: 31-JULY-2015
PROJECT LEADER: G.K.DONINGTON	DRAWN BY: J.KHERA
DESIGNED BY: J.KHERA	CHECKED BY: R.BENJAMIN
PROFILE SHEET (2) OF (2)	SHEET 16 OF 53

TRAFFIC CONTROL PHASE 1

1. INSTALL TEMPORARY TRAFFIC SIGNALS, SIGNS, STRIPING, AND BARRIER AS SHOWN.
2. MAINTAIN ACCESS TO/FROM PEKIN BROOK ROAD THROUGHOUT DURATION OF CONSTRUCTION.
3. ONE LANE OF ALTERNATING TRAFFIC WILL BE MAINTAINED THROUGHOUT DURATION OF PHASE 1.
4. SEE TYPICAL SECTIONS (2) FOR A STANDARD SECTION DURING TRAFFIC CONTROL PHASE 1.
5. THE CONTRACTOR SHALL BE RESPONSIBLE FOR PROVIDING SIGNAGE AS SHOWN ON THIS SHEET AND IN ACCORDANCE WITH THE LATEST EDITION OF THE MUTCD AND VTRANS STANDARDS. PAYMENT FOR SIGNAGE WILL BE MADE UNDER ITEM 641.10 TRAFFIC CONTROL. PAYMENT FOR TEMPORARY BARRIER - BRACED AND PORTABLE CHANGEABLE MESSAGE SIGNS WILL BE PAID UNDER ITEMS XXX.XX SPECIAL PROVISION (XX) AND ITEM 641.15 PORTABLE CHANGEABLE MESSAGE SIGN RESPECTIVELY.

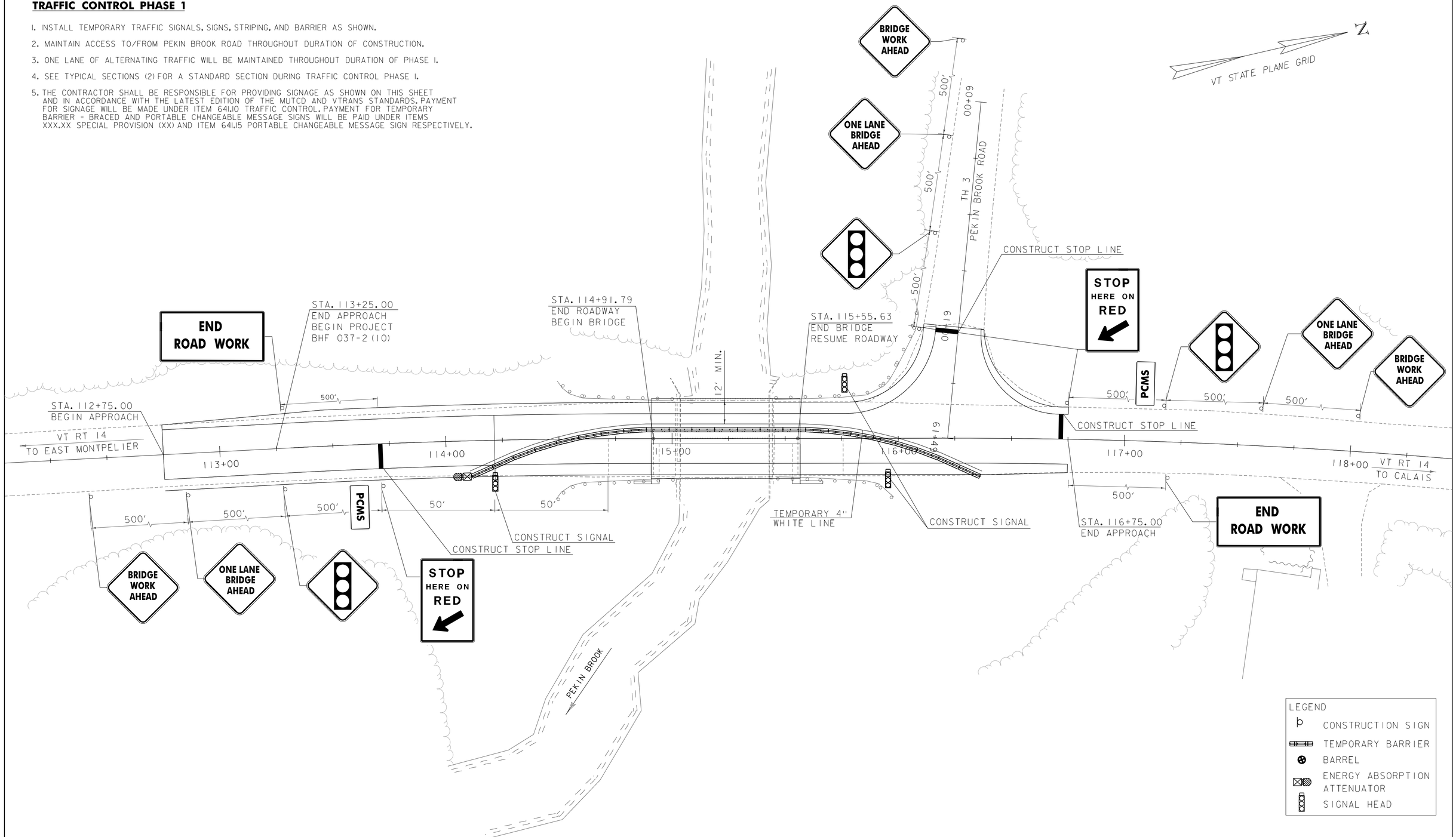

SCALE 1" = 20'-0"
20 0 20

PARSONS BRINCKERHOFF
650 ELM STREET
MANCHESTER, NH 03101

PROJECT NAME: CALAIS	
PROJECT NUMBER: BHF 037-2(10)	
FILE NAME: z12b144tcs.dgn	PLOT DATE: 31-JULY-2015
PROJECT LEADER: G.K.DONINGTON	DRAWN BY: J.KHERA
DESIGNED BY: J.KHERA	CHECKED BY: R. BENJAMIN
TRAFFIC CONTROL SHEET (1) OF (2)	SHEET 17 OF 53

TRAFFIC CONTROL PHASE 2

1. INSTALL TEMPORARY TRAFFIC SIGNALS AND ASSOCIATED SIGNS, STRIPING AND BARRIERS AS SHOWN.
2. MAINTAIN ACCESS TO/FROM PEKIN BROOK ROAD THROUGHOUT DURATION OF CONSTRUCTION.
3. ONE LANE OF ALTERNATING TRAFFIC WILL BE MAINTAINED THROUGHOUT DURATION OF PHASE 2.
4. SEE TYPICAL SECTIONS (2) FOR A STANDARD SECTION DURING TRAFFIC CONTROL PHASE 2.
5. THE CONTRACTOR SHALL BE RESPONSIBLE FOR PROVIDING SIGNAGE AS SHOWN ON THIS SHEET AND IN ACCORDANCE WITH THE LATEST EDITION OF THE MUTCD AND VTRANS STANDARDS. PAYMENT FOR SIGNAGE WILL BE MADE UNDER ITEM 641.10 TRAFFIC CONTROL. PAYMENT FOR TEMPORARY BARRIER - BRACED AND PORTABLE CHANGEABLE MESSAGE SIGNS WILL BE PAID UNDER ITEMS XXX.XX SPECIAL PROVISION (XX) AND ITEM 641.15 PORTABLE CHANGEABLE MESSAGE SIGN RESPECTIVELY.

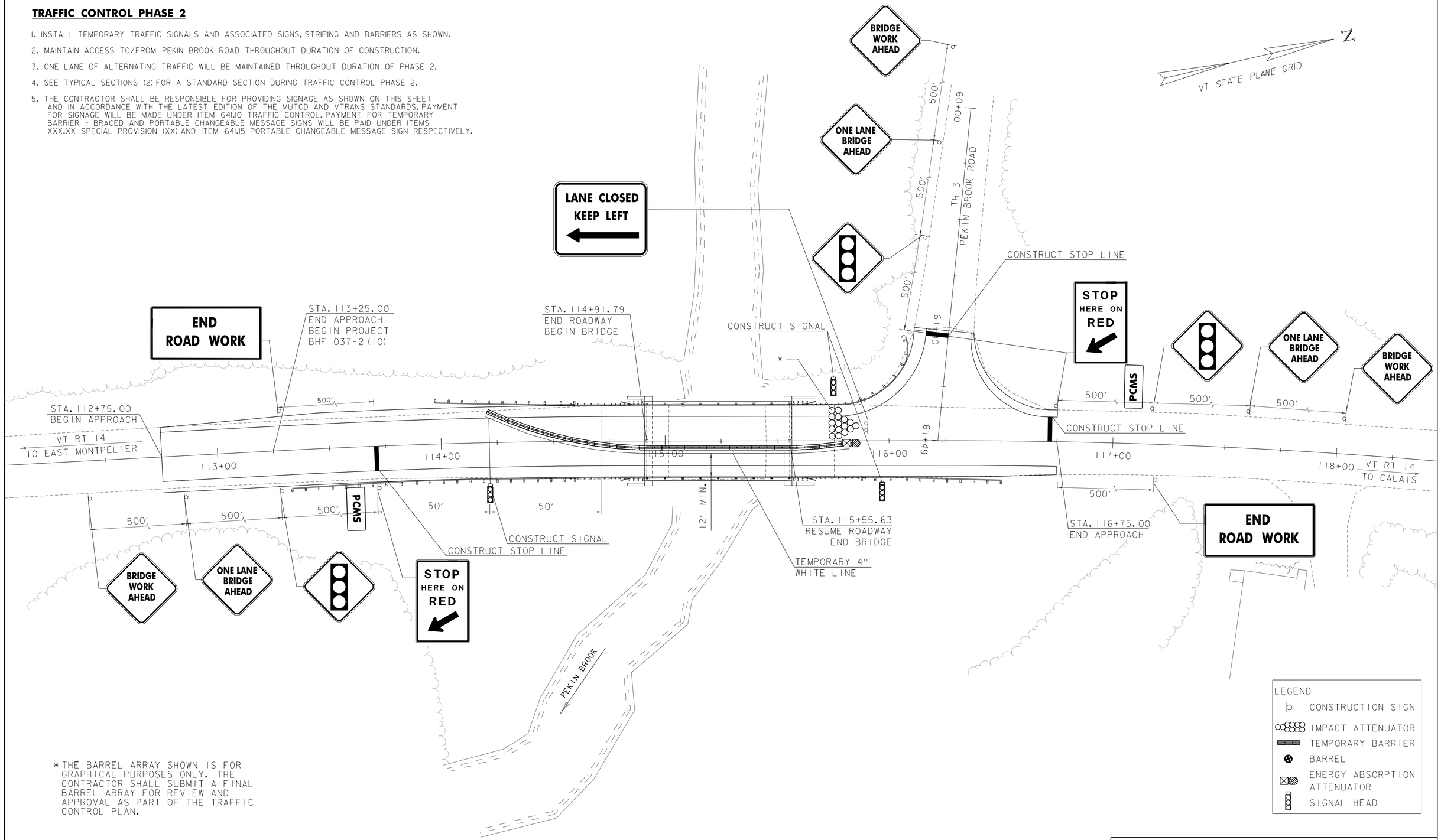

* THE BARREL ARRAY SHOWN IS FOR GRAPHICAL PURPOSES ONLY. THE CONTRACTOR SHALL SUBMIT A FINAL BARREL ARRAY FOR REVIEW AND APPROVAL AS PART OF THE TRAFFIC CONTROL PLAN.

LEGEND
- CONSTRUCTION SIGN
- IMPACT ATTENUATOR
- TEMPORARY BARRIER
- BARREL
- ENERGY ABSORPTION ATTENUATOR
- SIGNAL HEAD

SCALE 1" = 20'-0"
20 0 20

PARSONS BRINCKERHOFF
650 ELM STREET
MANCHESTER, NH 03101

PROJECT NAME: CALAIS	
PROJECT NUMBER: BHF 037-2(10)	
FILE NAME: zi2bl44tcs2.dgn	PLOT DATE: 31-JULY-2015
PROJECT LEADER: G.K.DONINGTON	DRAWN BY: J.KHERA
DESIGNED BY: J.KHERA	CHECKED BY: R. BENJAMIN
TRAFFIC CONTROL SHEET (2) OF (2)	SHEET 18 OF 53

NORTH CALAIS/MAPLE CORNERS SIGN

NOT TO SCALE

D1-2a; 3.0" RADIUS, 1.0" BORDER, WHITE ON GREEN;
STANDARD ARROW CUSTOM 13.4" X 8.1" 180°; "NORTH CALAIS" D 80% SPACING; "5" D; STANDARD ARROW CUSTOM 13.4" X 8.1" 180°; "MAPLE CORNERS" D 80% SPACING; "5" D;

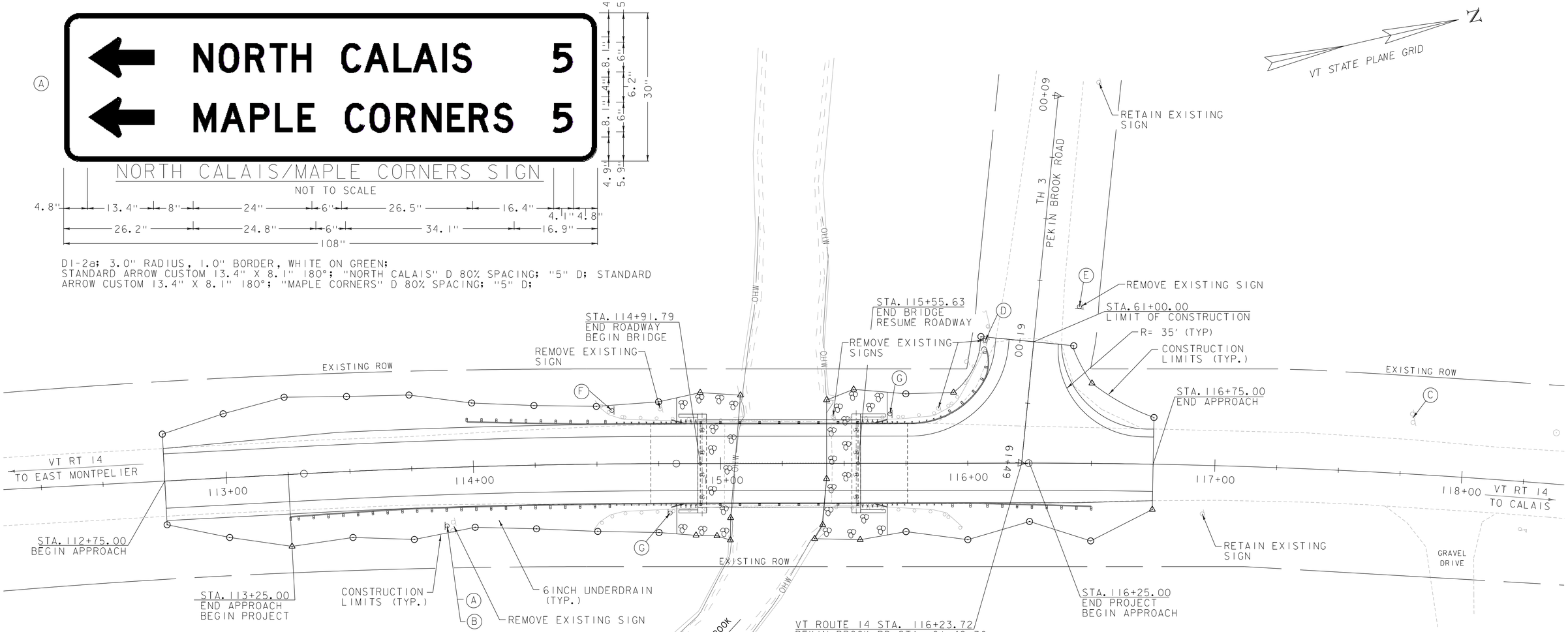

TOWN CLERK'S OFFICE SIGN

NOT TO SCALE

D1-1a(L); 3.0" RADIUS, 1.0" BORDER, WHITE ON GREEN;
STANDARD ARROW CUSTOM 13.4" X 8.1" 180°; "TOWN CLERK'S OFFICE" D 70% SPACING;

TOWN CLERK'S OFFICE SIGN

NOT TO SCALE

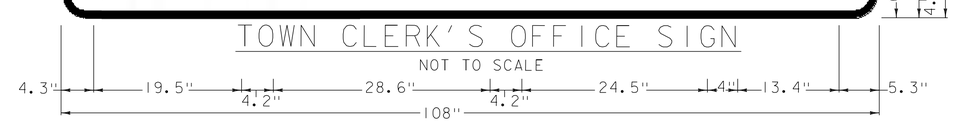

D1-1a(R); 3.0" RADIUS, 1.0" BORDER, WHITE ON GREEN;
"TOWN CLERK'S OFFICE" D 70% SPACING; STANDARD ARROW CUSTOM 13.4" X 8.1" 0°;

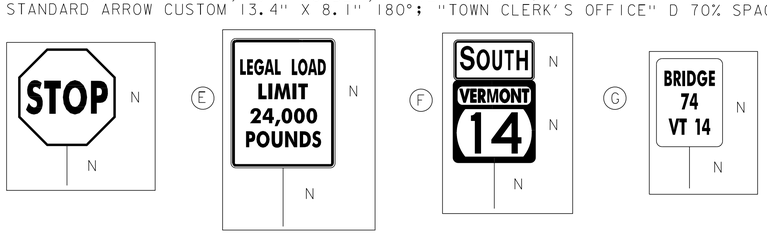

SIGNING LEGEND

N = NEW

SCALE 1" = 20'-0"

20 0 20

PARSONS BRINCKERHOFF
650 ELM STREET
MANCHESTER, NH 03101

PROJECT NAME: CALAIS	
PROJECT NUMBER: BHF 037-2(10)	
FILE NAME: z12b144TSL.dgn	PLOT DATE: 31-JULY-2015
PROJECT LEADER: G.K.DONINGTON	DRAWN BY: S.BROWN
DESIGNED BY: S.BROWN	CHECKED BY: R.BENJAMIN
TRAFFIC SIGN LAYOUT	SHEET 19 OF 53

STATE OF VERMONT
AGENCY OF TRANSPORTATION

TRAFFIC SIGN SUMMARY SHEET

MILEMARKER, STATION, OR SIGN NUMBER	SIGN LEGEND	SIGN DIMENSIONS EA	WIDTH (in)	HEIGHT (in)	NEW & SALVAGED SIGNS "A"	"B"	SALV SIGN	SALV TIS	EXIST POST RETAIN	SALVAGE	NEW SIGN POSTS NO. OF POSTS	SQUARE STEEL (in) 1.75 lb/ft 1.88	2.0 lb/ft 2.42	2.5 lb/ft 3.35	ANCHOR	SLEEVE	TUBULAR ALUMINUM Ø (in) 3.0 lb/ft 1.3	4.0 lb/ft 1.7	4.0 MOD lb/ft 1.7	TUBULAR STEEL Ø (in) FOUNDATION	3.0 lb/ft 7.6	3.5 lb/ft 9.0	4.0 lb/ft 10.8	5.0 lb/ft 14.6	W-SHAPE STEEL FTG. SIZE 24"	30"	WEIGHT	POST SIZE	SIGNS REQUIRED	REMARKS	SIGN DETAIL STD. SHEET NUMBER	DETAIL ON SHEET NUMBER	MUTCD/ SHSM
STA 113+89 RT	NORTH CALAIS 5 MAPLE CORNERS 5	1	108	30	22.50						2		X																	DI-2a DOUBLE MOUNTED ABOVE DI-1a(L)		17	DI-2a
STA 113+89 RT	TOWN CLERK'S OFFICE	1	108	18	13.50																											17	DI-1a(L)
STA 114+56 LT	SOUTH	1	24	12	2.00						1		X																	MI-5 DOUBLE MOUNTED ABOVE M3-1	E-136B		
	VERMONT 14	1	24	24	4.00																										E-136B		
STA 114+80 RT	BRIDGE 74 VT 14	1	6	10	0.42						1		X																	VD-701	T-42		
STA 115+69 LT	BRIDGE 74 VT 14	1	6	10	0.42						1		X																	VD-701	T-42		
STA 116+07 LT	STOP	1	30	30	6.25						1		X																				R1-1
STA 116+45 LT	LEGAL LOAD LIMIT 24,000 POUNDS	1	24	30	5.00						1		X																	VR-017	E-141		
STA 117+79 LT	TOWN CLERK'S OFFICE	1	108	18	13.50																									DOUBLE MOUNT BENEATH EXISTING SIGNS ON EXISTING SIGN POSTS		17	DI-1a(R)
												FT	FT	FT		EA	LB	LB	LB		LB	LB	LB	LB								
TOTALS					SF 67.59	SF	EA.	SF				FT					LB			EA.	LB				EA.	EA.	LB					

FINAL POST LENGTHS ARE TO BE DETERMINED IN THE FIELD. POST SIZES ARE COMPUTED BASED ON INFORMATION FURNISHED ON THE STANDARD SHEETS AND THE VTRANS "SIGN POST DESIGN GUIDELINE."

PARSONS BRINCKERHOFF
650 ELM STREET
MANCHESTER, NH 03101

PROJECT NAME: CALAIS
PROJECT NUMBER: BHF 037-2(10)

FILE NAME: z12b144TraffSign.dgn
PROJECT LEADER: G.K.DONINGTON
DESIGNED BY: S.BROWN
TRAFFIC SIGN SUMMARY SHEET

PLOT DATE: 31-JULY-2015
DRAWN BY: S.BROWN
CHECKED BY: R.BENJAMIN
SHEET 20 OF 53

SOIL CLASSIFICATION

AASHTO

A1	Gravel and Sand
A3	Fine Sand
A2	Silty or Clayey Gravel and Sand
A4	Silty Soil - Low Compressibility
A5	Silty Soil - Highly Compressible
A6	Clayey Soil - Low Compressibility
A7	Clayey Soil - Highly Compressible

ROCK QUALITY DESIGNATION

R.Q.D. (%)	ROCK DESCRIPTION
<25	Very Poor
25 to 50	Poor
51 to 75	Fair
76 to 90	Good
>90	Excellent

SHEAR STRENGTH

UNDRAINED SHEAR STRENGTH IN P.S.F.	CONSISTENCY
<250	Very Soft
250-500	Soft
500-1000	Med. Stiff
1000-2000	Stiff
2000-4000	Very Stiff
>4000	Hard

CORRELATION GUIDE OF "N" TO DENSITY/CONSISTENCY

DENSITY (GRANULAR SOILS)

N	DESCRIPTIVE TERM
<5	Very Loose
5-10	Loose
11-24	Med. Dense
25-50	Dense
>50	Very Dense

CONSISTENCY (COHESIVE SOILS)

N	DESCRIPTIVE TERM
<2	Very Soft
2-4	Soft
5-8	Med. Stiff
9-15	Stiff
16-30	Very Stiff
31-60	Hard
>60	Very Hard

COMMONLY USED SYMBOLS

▼	Water Elevation
⚽	Standard Penetration Boring
⊕	Auger Boring
⊙	Rod Sounding
S	Sample
N	Standard Penetration Test Blow Count Per Foot For: 2" O.D. Sampler 1 3/8" I.D. Sampler Hammer Weight Of 140 Lbs. Hammer Fall Of 30"
VS	Field Vane Shear Test
US	Undisturbed Soil Sample
B	Blast
DC	Diamond Core
MD	Mud Drill
WA	Wash Ahead
HSA	Hollow Stem Auger
AX	Core Size 1 1/8"
BX	Core Size 1 5/8"
NX	Core Size 2 1/8"
M	Double Tube Core Barrel Used
LL	Liquid Limit
PL	Plastic Limit
PI	Plasticity Index
NP	Non Plastic
w	Moisture Content (Dry Wgt. Basis)
D	Dry
M	Moist
MTW	Moist To Wet
W	Wet
Sat	Saturated
Bo	Boulder
Gr	Gravel
Sa	Sand
Si	Silt
Cl	Clay
HP	Hardpan
Le	Ledge
NLTD	No Ledge To Depth
CNPF	Can Not Penetrate Further
TLOB	Top of Ledge Or Boulder
NR	No Recovery
Rec.	Recovery
%Rec.	Percent Recovery
RQD	Rock Quality Designation
CBR	California Bearing Ratio
<	Less Than
>	Greater Than
R	Refusal (N > 100)
VTSPG	NAD83 - See Note 7

COLOR

blk	Black	pnk	Pink
bl	Blue	pu	Purple
brn	Brown	rd	Red
dk	Dark	tn	Tan
gry	Gray	wh	White
gn	Green	yel	Yellow
lt	Light	mltc	Multicolored
or	Orange		

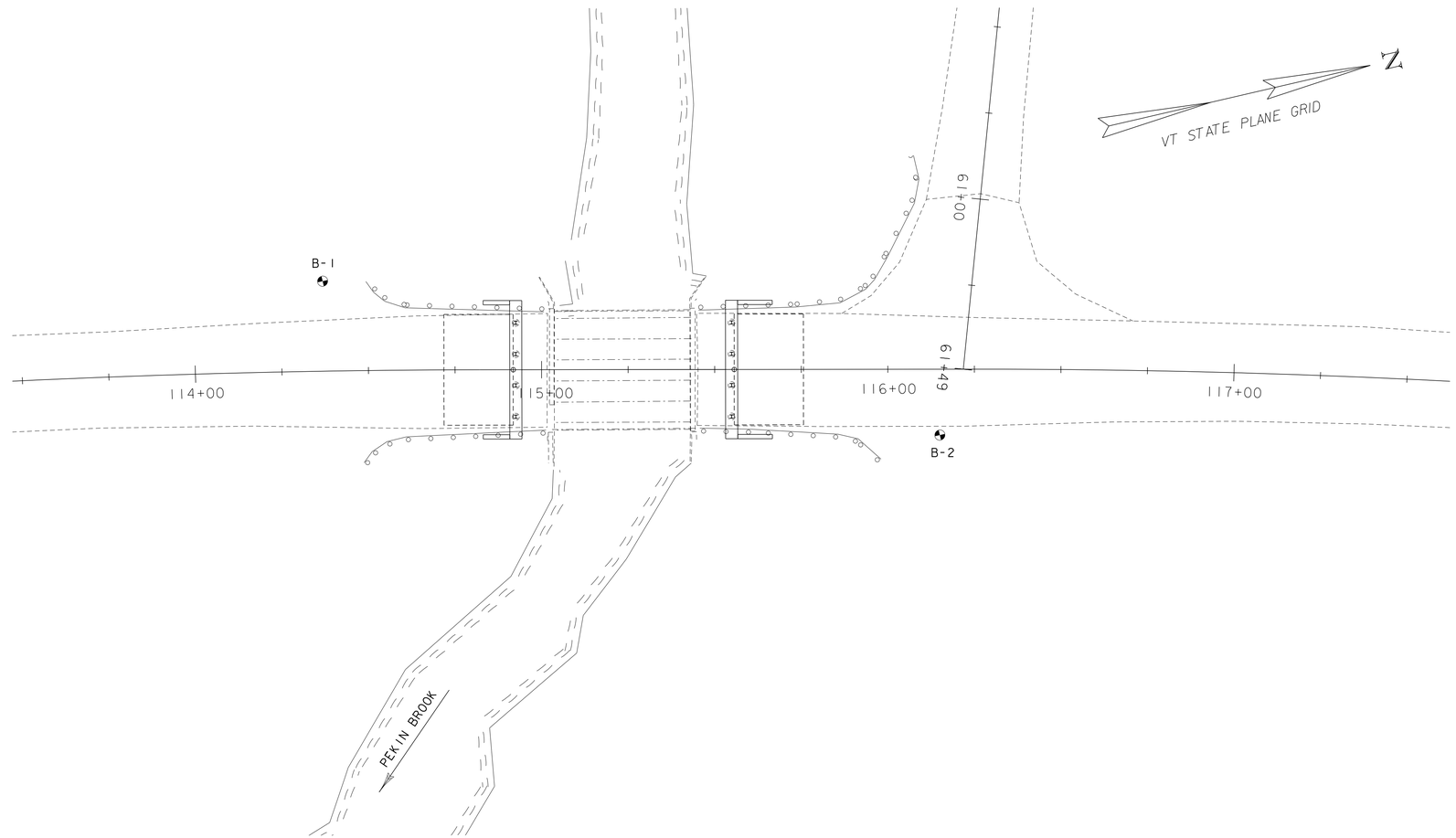

HOLE NO.	STATION	OFFSET (FT)	NORTHING	EASTING	DEPTH TO BEDROCK	GROUND ELEVATION
B-1	114+37.5	26.00 LT	1654568.039	668328.040	109.0	721.0
B-2	116+15.0	19.00 RT	1654651.256	668489.677	126.0	720.0

SCALE 1" = 20'-0

20 0 20

DEFINITIONS (AASHTO)

BEDROCK (LEDGE) - Rock in its native location of indefinite thickness.

BOULDER - A rock fragment with an average dimension > 12 inches.

COBBLE - Rock fragments with an average dimension between 3 and 12 inches.

GRAVEL - Rounded particles of rock < 3" and > 0.0787" (#10 sieve).

SAND - Particles of rock < 0.0787" (#10 sieve) and > 0.0029" (#200 sieve).

SILT - Soil < 0.0029" (#200 sieve), non or slightly plastic and exhibits no strength when air-dried.

CLAY - Fine grained soil, exhibits plasticity when moist and considerable strength when air-dried.

VARVED - Alternate layers of silt and clay.

HARDPAN - Extremely dense soil, cemented layer, not softened when wet.

MUCK - Soft organic soil (containing > 10% organic material.

MOISTURE CONTENT - Weight of water divided by dry weight of soil.

FLOWING SAND - Granular soil so saturated (loose) that it flows into drill casing during extraction of wash rod.

STRIKE - Angle from magnetic north to line of intersection of bed with a horizontal plane.

DIP - Inclination of bed with a horizontal plane.

GENERAL NOTES

1. The subsurface explorations shown herein were made between March 10 and April 10, 2014 by Terracon Consultants Inc.

2. Soil and rock classifications, properties and descriptions are based on engineering interpretation from available subsurface information by the Agency and may not necessarily reflect actual variations in subsurface conditions that may be encountered between individual boring or sample locations.

3. Observed water levels and/or conditions indicated are as recorded at the time of exploration and may vary according to the prevailing rainfall, methods of exploration and other factors.

4. Engineering judgment was exercised in preparing the subsurface information presented herein. Analysis and interpretation of subsurface data was performed and interpreted for Agency design and estimating purposes. Presentation of the information in the Contract is intended to provide the Contractor access to the same data available to the Agency. The subsurface information is presented in good faith and is not intended as a substitute for personal investigation, independent interpretation, independent analysis or judgment by the Contractor.

5. Pictorial structure details shown on the boring plan layout or soils profile are for illustrative purposes only and may not accurately portray final contract details.

6. Terminology used on boring logs to describe the hardness, degree of weathering, and spacing of fractures, joints and other discontinuities in the bedrock is defined in the AASHTO Manual on Subsurface Investigations, 1988.

7. Northing and Easting coordinates are shown in Vermont State Plane Grid North American Datum 1983 in meters and survey feet.

PARSONS BRINCKERHOFF
650 ELM STREET
MANCHESTER, NH 03101

PROJECT NAME: CALAIS
PROJECT NUMBER: BHF 037-2(10)

FILE NAME: z12b144bor.dgn
PROJECT LEADER: G.K. DONINGTON
DESIGNED BY: S.BROWN
BORING LOCATION PLAN

PLOT DATE: 31-JULY-2015
DRAWN BY: S.BROWN
CHECKED BY: A.STOCKIN
SHEET 21 OF 53

STATE OF VERMONT
AGENCY OF TRANSPORTATION
MATERIALS & RESEARCH SECTION
SUBSURFACE INFORMATION

BORING LOG

VT Route 14, Bridge 74 Over Pekin Brook
Calais, Vermont
BHF 037-2(10)

Boring No.: B-1
Page No.: 1 of 3
Pin No.: s12b144
Checked By: ASP

Boring Crew: Drilex, JDF
Date Started: 3/10/14 Date Finished: 3/11/14
VTSPG NAD83: N 1654568.04 ft E 668328.04 ft
Station: 114.375 Offset: 26.00LT
Ground Elevation: 721.0 ft

	Casing	Sampler
Type:	Steel	SS
I.D.:	4 in	1.38 in
Hammer Wt:	300 lb.	140 lb.
Hammer Fall:	30 in.	30 in.
Hammer/Rod Type:	Auto/N	
Rig:	CME 85 Truck	C_E = 1.33

Groundwater Observations		
Date	Depth (ft)	Notes
03/10/14	16.0	While sampling

Depth (ft)	Strata (1)	CLASSIFICATION OF MATERIALS (Description)	Blows/6" (N Value)	Moisture Content %	Gravel %	Sand %	Fines %
		A-1-b, GrSa, dark brown, Rec. = 1.58 ft, (FILL)	11-28-33-22 (61)	14.1	28.0	53.3	18.7
		A-1-b, GrSa, brown, Rec. = 0.92 ft, (FILL)	15-18-9-3 (27)	8.8	30.5	52.6	16.9
5		A-2-4, SiSa, gray-brown, Rec. = 0.25 ft, (FILL)	2-1-1-2 (2)	23.3	14.4	60.2	25.4
		A-4, SiSa, dark brown, Rec. = 0.17 ft	1-1-1-1 (2)	29.5	5.0	56.6	38.4
		A-4, GrSiSa, brown/dark brown, Rec. = 0.5 ft	1-1-1-1 (2)	26.7	22.1	40.2	37.7
10		A-4, SiSa, brown/dark brown, Rec. = 1.33 ft	3-5-4-4 (9)	25.0	15.5	43.5	41.0
		A-4, SaSi, gray-brown, Rec. = 1.0 ft	3-4-2-2 (6)	35.3	3.8	47.9	48.3
15		A-4, SiSa, gray-brown, Rec. = 0.0 ft	8-8-9-9 (17)				
		A-4, Si, gray, Rec. = 1.17 ft	3-3-3-3 (6)	30.8	4.7	11.9	83.4
		A-4, Si, gray, Rec. = 1.58 ft	1-1-1-2 (2)	36.1	0.3	1.6	98.1
20		A-4, Si, gray, Rec. = 0.83 ft	12-6-2-2 (8)	28.5	1.2	5.4	93.4
		A-4, Si, gray, Rec. = 0.83 ft	3-2-2-3 (4)	31.8	1.1	5.6	93.3
25		A-4, Si, gray, Rec. = 1.17 ft	8-7-5-4 (12)	29.8		1.7	98.3
30		A-4, Si, gray, Rec. = 1.58 ft	4-2-2-2 (4)	34.1		1.0	99.0
35		A-4, Si, gray, Rec. = 1.58 ft	5-4-3-3 (7)	34.6		0.7	99.3
40		A-4, Si, gray, Rec. = 1.67 ft	5-4-2-2 (6)	31.7		0.8	99.2
45		A-4, Si, gray, Rec. = 1.83 ft	3-2-2-4 (4)	39.1		0.6	99.4
		Shelby tube sample, Rec. = 0.0 ft					

Notes:
1. Stratification lines represent approximate boundary between material types. Transition may be gradual.
2. N Values have not been corrected for hammer energy. C_E is the hammer energy correction factor. C_E is an estimated value.
3. Water level readings have been made at times and under conditions stated.
Fluctuations of groundwater may occur due to other factors than those present at the time measurements were made.
4. Ground surface elevations indicated on the boring logs were estimated based on the grading plan provided by VAOT.

Terracon

2010 CORP J114511.GPJ VERMONT AOT.GDT 4/28/14

STATE OF VERMONT
AGENCY OF TRANSPORTATION
MATERIALS & RESEARCH SECTION
SUBSURFACE INFORMATION

BORING LOG

VT Route 14, Bridge 74 Over Pekin Brook
Calais, Vermont
BHF 037-2(10)

Boring No.: B-1
Page No.: 2 of 3
Pin No.: s12b144
Checked By: ASP

Boring Crew: Drilex, JDF
Date Started: 3/10/14 Date Finished: 3/11/14
VTSPG NAD83: N 1654568.04 ft E 668328.04 ft
Station: 114.375 Offset: 26.00LT
Ground Elevation: 721.0 ft

	Casing	Sampler
Type:	Steel	SS
I.D.:	4 in	1.38 in
Hammer Wt:	300 lb.	140 lb.
Hammer Fall:	30 in.	30 in.
Hammer/Rod Type:	Auto/N	
Rig:	CME 85 Truck	C_E = 1.33

Groundwater Observations		
Date	Depth (ft)	Notes
03/10/14	16.0	While sampling

Depth (ft)	Strata (1)	CLASSIFICATION OF MATERIALS (Description)	Blows/6" (N Value)	Moisture Content %	Gravel %	Sand %	Fines %
		A-4, Si, gray, Rec. = 1.17 ft	4-2-2-2 (4)	34.3		1.0	99.0
55		A-4, Si, gray, Rec. = 1.5 ft	4-4-2-3 (6)	30.8		6.1	93.9
60		A-4, Si, gray, Rec. = 1.83 ft	1-1-2-2 (3)	29.9		1.6	98.4
65		A-4, Si, gray, Rec. = 2.0 ft	4-5-5-4 (10)	34.4		1.0	99.0
70		A-4, Si, gray, Rec. = 0.75 ft	3-3-3-4 (6)	34.9		0.2	99.8
75							
80							
85		A-4, Si, gray, Rec. = 1.5 ft	5-6-6-5 (12)	30.9		1.2	98.8
90							
95		A-4, Si, gray, Rec. = 1.58 ft	3-3-3-5 (6)	33.5		3.1	96.9
		A-4, Si, gray, Rec. = 1.75 ft	5-6-6-7	28.1		7.8	92.2

Notes:
1. Stratification lines represent approximate boundary between material types. Transition may be gradual.
2. N Values have not been corrected for hammer energy. C_E is the hammer energy correction factor. C_E is an estimated value.
3. Water level readings have been made at times and under conditions stated.
Fluctuations of groundwater may occur due to other factors than those present at the time measurements were made.
4. Ground surface elevations indicated on the boring logs were estimated based on the grading plan provided by VAOT.

Terracon

2010 CORP J114511.GPJ VERMONT AOT.GDT 4/28/14

STATE OF VERMONT
AGENCY OF TRANSPORTATION
MATERIALS & RESEARCH SECTION
SUBSURFACE INFORMATION

BORING LOG

VT Route 14, Bridge 74 Over Pekin Brook
Calais, Vermont
BHF 037-2(10)

Boring No.: B-1
Page No.: 3 of 3
Pin No.: s12b144
Checked By: ASP

Boring Crew: Drilex, JDF
Date Started: 3/10/14 Date Finished: 3/11/14
VTSPG NAD83: N 1654568.04 ft E 668328.04 ft
Station: 114.375 Offset: 26.00LT
Ground Elevation: 721.0 ft

	Casing	Sampler
Type:	Steel	SS
I.D.:	4 in	1.38 in
Hammer Wt:	300 lb.	140 lb.
Hammer Fall:	30 in.	30 in.
Hammer/Rod Type:	Auto/N	
Rig:	CME 85 Truck	C_E = 1.33

Groundwater Observations		
Date	Depth (ft)	Notes
03/10/14	16.0	While sampling

Depth (ft)	Strata (1)	CLASSIFICATION OF MATERIALS (Description)	Blows/6" (N Value)	Moisture Content %	Gravel %	Sand %	Fines %
			(12)				
105		A-4, SaSi, gray, Rec. = 0.83 ft 105.0 ft - 109.0 ft, Weathered bedrock encountered. Difficult drilling from 105' to 109'. Attempted SPT at 109'. SPT refusal encountered at 109'.	14-16-60/2" (76+)	25.0	0.7	31.0	68.3
110		Hole stopped @ 109.0 ft					
115							
120							
125							
130							
135							
140							
145							

Notes:
1. Stratification lines represent approximate boundary between material types. Transition may be gradual.
2. N Values have not been corrected for hammer energy. C_E is the hammer energy correction factor. C_E is an estimated value.
3. Water level readings have been made at times and under conditions stated.
Fluctuations of groundwater may occur due to other factors than those present at the time measurements were made.
4. Ground surface elevations indicated on the boring logs were estimated based on the grading plan provided by VAOT.

Terracon

2010 CORP J114511.GPJ VERMONT AOT.GDT 4/28/14

Bottom of Pile Cap
Abutment 1
Elev. = 709.10

PARSONS BRINCKERHOFF
650 ELM STREET
MANCHESTER, NH 03101

PROJECT NAME: CALAIS
PROJECT NUMBER: BHF 037-2(10)

FILE NAME: z12b144borings.dgn
PROJECT LEADER: G.K.DONINGTON
DESIGNED BY: S.BROWN
BORING LOGS SHEET (1) OF (2)

PLOT DATE: 31-JULY-2015
DRAWN BY: S.BROWN
CHECKED BY: A.STOCKIN
SHEET 22 OF 53

STATE OF VERMONT
AGENCY OF TRANSPORTATION
MATERIALS & RESEARCH SECTION
SUBSURFACE INFORMATION

BORING LOG

VT Route 14, Bridge 74 Over Pekin Brook
Calais, Vermont
BHF 037-2(10)

Boring No.: B-2
Page No.: 1 of 3
Pin No.: s12b144
Checked By: ASP

Boring Crew: Drilex, JDF
Date Started: 3/17/14 Date Finished: 4/10/14
VTSPG NAD83: N 1654651.26 ft E 668489.68 ft
Station: 116.15 Offset: 19.00RT
Ground Elevation: 720.0 ft

	Casing	Sampler
Type:	Steel	SS
I.D.:	4 in	1.38 in
Hammer Wt:	300 lb.	140 lb.
Hammer Fall:	30 in.	30 in.
Hammer/Rod Type:	Auto/N	
Rig:	CME 85 Truck	C_E = 1.33

Groundwater Observations

Date	Depth (ft)	Notes
03/17/14	9.0	While sampling

Depth (ft)	Strata (1)	CLASSIFICATION OF MATERIALS (Description)	Run (Dip deg.)	Core Rec. % (RQD %)	Drill Rate minutes/ft	Blows/6" (N Value)	Moisture Content %	Gravel %	Sand %	Fines %
5		A-2-4, SiSa, Dark brown, Rec. = 0.17 ft, (FILL)				4-2-3-4 (5)	17.3	14.7	52.8	32.5
10		A-4, SaSi Sample stuck in casing. (Casing pulled up and collected sample from casing), brown, Rec. = 0.0 ft				0-0-0-0	25.4	0.7	22.0	77.3
15		Rec. = 0.0 ft				6-5-4-2 (9)				
20		A-4, Si, brown/gray, Rec. = 0.58 ft				2-1-1-1 (2)	36.7	3.1	1.1	95.8
25		Rec. = 0.0 ft				2-2-2-2 (4)				
30		A-4, Si, brown/gray, Rec. = 0.25 ft				3-2-2-3 (4)	35.8	3.6	3.4	93.0
35		A-4, Si, gray, Rec. = 1.42 ft				2-1-2-2 (3)	35.5		3.2	96.8
40		A-4, Si, gray, Rec. = 1.42 ft				2-1-1-2 (2)	26.5	0.2	4.4	95.4
45		A-4, Si, gray, Rec. = 1.5 ft				3-2-2-2 (4)	38.6		1.1	98.9
		A-4, Si, gray, Rec. = 1.0 ft				3-2-2-3	35.7		1.9	98.1

Notes:
1. Stratification lines represent approximate boundary between material types. Transition may be gradual.
2. N Values have not been corrected for hammer energy. C_E is the hammer energy correction factor. C_E is an estimated value.
3. Water level readings have been made at times and under conditions stated.
Fluctuations of groundwater may occur due to other factors than those present at the time measurements were made.
4. Ground surface elevations indicated on the boring logs were estimated based on the grading plan provided by VAOT.

Terracon

2010 CORP J114511.GPJ VERMONT AOT.GDT 4/28/14

STATE OF VERMONT
AGENCY OF TRANSPORTATION
MATERIALS & RESEARCH SECTION
SUBSURFACE INFORMATION

BORING LOG

VT Route 14, Bridge 74 Over Pekin Brook
Calais, Vermont
BHF 037-2(10)

Boring No.: B-2
Page No.: 2 of 3
Pin No.: s12b144
Checked By: ASP

Boring Crew: Drilex, JDF
Date Started: 3/17/14 Date Finished: 4/10/14
VTSPG NAD83: N 1654651.26 ft E 668489.68 ft
Station: 116.15 Offset: 19.00RT
Ground Elevation: 720.0 ft

	Casing	Sampler
Type:	Steel	SS
I.D.:	4 in	1.38 in
Hammer Wt:	300 lb.	140 lb.
Hammer Fall:	30 in.	30 in.
Hammer/Rod Type:	Auto/N	
Rig:	CME 85 Truck	C_E = 1.33

Groundwater Observations

Date	Depth (ft)	Notes
03/17/14	9.0	While sampling

Depth (ft)	Strata (1)	CLASSIFICATION OF MATERIALS (Description)	Run (Dip deg.)	Core Rec. % (RQD %)	Drill Rate minutes/ft	Blows/6" (N Value)	Moisture Content %	Gravel %	Sand %	Fines %
						(4)				
55										
60		A-4, Si, gray, Rec. = 0.83 ft				3-2-2-2 (4)	33.0		3.4	96.6
65										
70		A-4, Si, gray, Rec. = 0.83 ft				3-3-2-2 (5)	29.9		3.0	97.0
75										
80		A-4, Si, gray, Rec. = 1.08 ft				8-5-5-8 (10)	32.3		2.8	97.2
85										
90		A-4, Si, gray, Rec. = 1.08 ft				8-5-6-10 (11)	31.9	5.0	3.2	91.8
95										

Notes:
1. Stratification lines represent approximate boundary between material types. Transition may be gradual.
2. N Values have not been corrected for hammer energy. C_E is the hammer energy correction factor. C_E is an estimated value.
3. Water level readings have been made at times and under conditions stated.
Fluctuations of groundwater may occur due to other factors than those present at the time measurements were made.
4. Ground surface elevations indicated on the boring logs were estimated based on the grading plan provided by VAOT.

Terracon

2010 CORP J114511.GPJ VERMONT AOT.GDT 4/28/14

STATE OF VERMONT
AGENCY OF TRANSPORTATION
MATERIALS & RESEARCH SECTION
SUBSURFACE INFORMATION

BORING LOG

VT Route 14, Bridge 74 Over Pekin Brook
Calais, Vermont
BHF 037-2(10)

Boring No.: B-2
Page No.: 3 of 3
Pin No.: s12b144
Checked By: ASP

Boring Crew: Drilex, JDF
Date Started: 3/17/14 Date Finished: 4/10/14
VTSPG NAD83: N 1654651.26 ft E 668489.68 ft
Station: 116.15 Offset: 19.00RT
Ground Elevation: 720.0 ft

	Casing	Sampler
Type:	Steel	SS
I.D.:	4 in	1.38 in
Hammer Wt:	300 lb.	140 lb.
Hammer Fall:	30 in.	30 in.
Hammer/Rod Type:	Auto/N	
Rig:	CME 85 Truck	C_E = 1.33

Groundwater Observations

Date	Depth (ft)	Notes
03/17/14	9.0	While sampling

Depth (ft)	Strata (1)	CLASSIFICATION OF MATERIALS (Description)	Run (Dip deg.)	Core Rec. % (RQD %)	Drill Rate minutes/ft	Blows/6" (N Value)	Moisture Content %	Gravel %	Sand %	Fines %
105		A-4, Si, gray, Rec. = 0.83 ft				6-6-11-13 (17)	29.7	0.7	2.9	96.4
110										
115		SiSa, gray, 115.0 ft - 119.0 ft				14-18-21-30 (39)	22.8	0.1	52.3	47.6
120		Possible gravel from 119 to 121.5 feet indicated by grinding drilling noise								
125		121.5 ft - 126.0 ft, Gray, whitish MUSCOVITE-BIOTITE-QUARTZ PHYLLITE, moderately hard to hard, tight joints (typically fresh to slightly weathered with rust color) dipping from 0° to 55° (typically from 25° to 55° with one horizontal joint).	1	93.5 (79.6)	2.33 1.42 1.42 1.5 0.83					
130		On 4/9/2014, relocated boring 5 feet towards the bridge and redrilled from 115 ft. to 126 ft. using Crawford Drilling Services. Hole stopped @ 126.0 ft								
135										
140										
145										

Notes:
1. Stratification lines represent approximate boundary between material types. Transition may be gradual.
2. N Values have not been corrected for hammer energy. C_E is the hammer energy correction factor. C_E is an estimated value.
3. Water level readings have been made at times and under conditions stated.
Fluctuations of groundwater may occur due to other factors than those present at the time measurements were made.
4. Ground surface elevations indicated on the boring logs were estimated based on the grading plan provided by VAOT.

Terracon

2010 CORP J114511.GPJ VERMONT AOT.GDT 4/28/14

Bottom of Pile Cap
Abutment
Elev. = 709.31

Approx. Pile Tip
Elev. = 594.00
ABUTMENT 1 & 2

PARSONS BRINCKERHOFF
650 ELM STREET
MANCHESTER, NH 03101

PROJECT NAME: CALAIS
PROJECT NUMBER: BHF 037-2(10)

FILE NAME: z12b144borings.dgn
PROJECT LEADER: G.K.DONINGTON
DESIGNED BY: S.BROWN
BORING LOGS SHEET (2) OF (2)

PLOT DATE: 31-JULY-2015
DRAWN BY: S.BROWN
CHECKED BY: A.STOCKIN
SHEET 23 OF 53

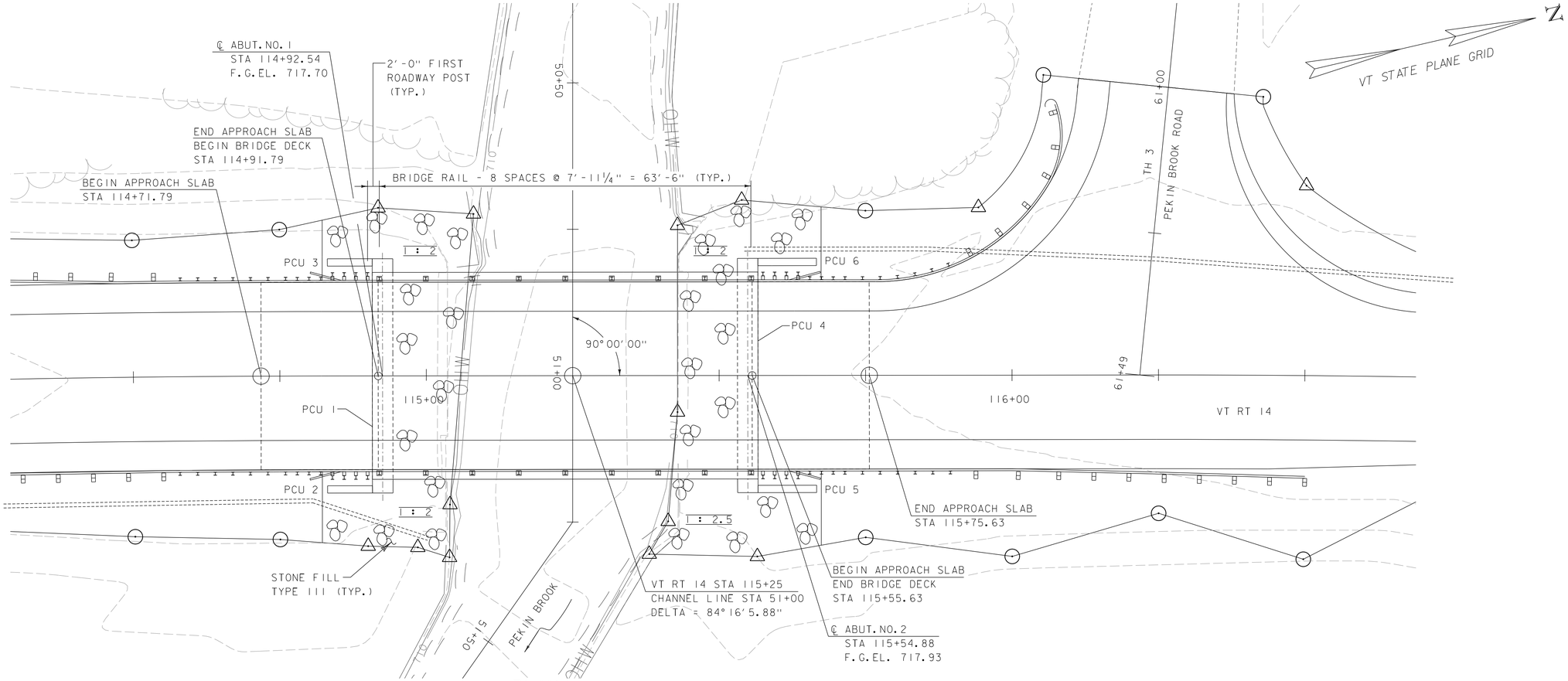

PLAN

SCALE: 1" = 10'-0"

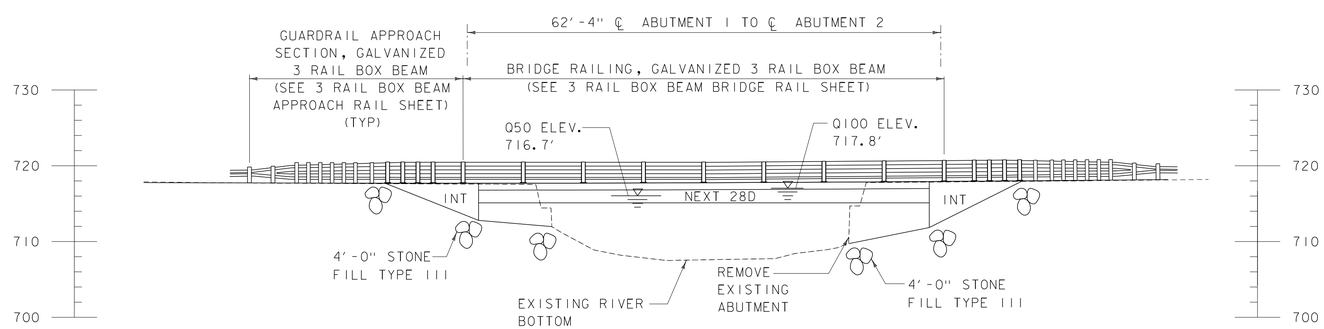

ELEVATION

SCALE: 1" = 10'-0"

PROJECT NAME: CALAIS
PROJECT NUMBER: BHF 037-2(10)

PARSONS BRINCKERHOFF
650 ELM STREET
MANCHESTER, NH 03101

FILE NAME: z12b144pe.dgn
PROJECT LEADER: G.K.DONINGTON
DESIGNED BY: S.BROWN
PLAN AND ELEVATION SHEET

PLOT DATE: 31-JULY-2015
DRAWN BY: W.GERHOLD
CHECKED BY: A.STOCKIN
SHEET 24 OF 53

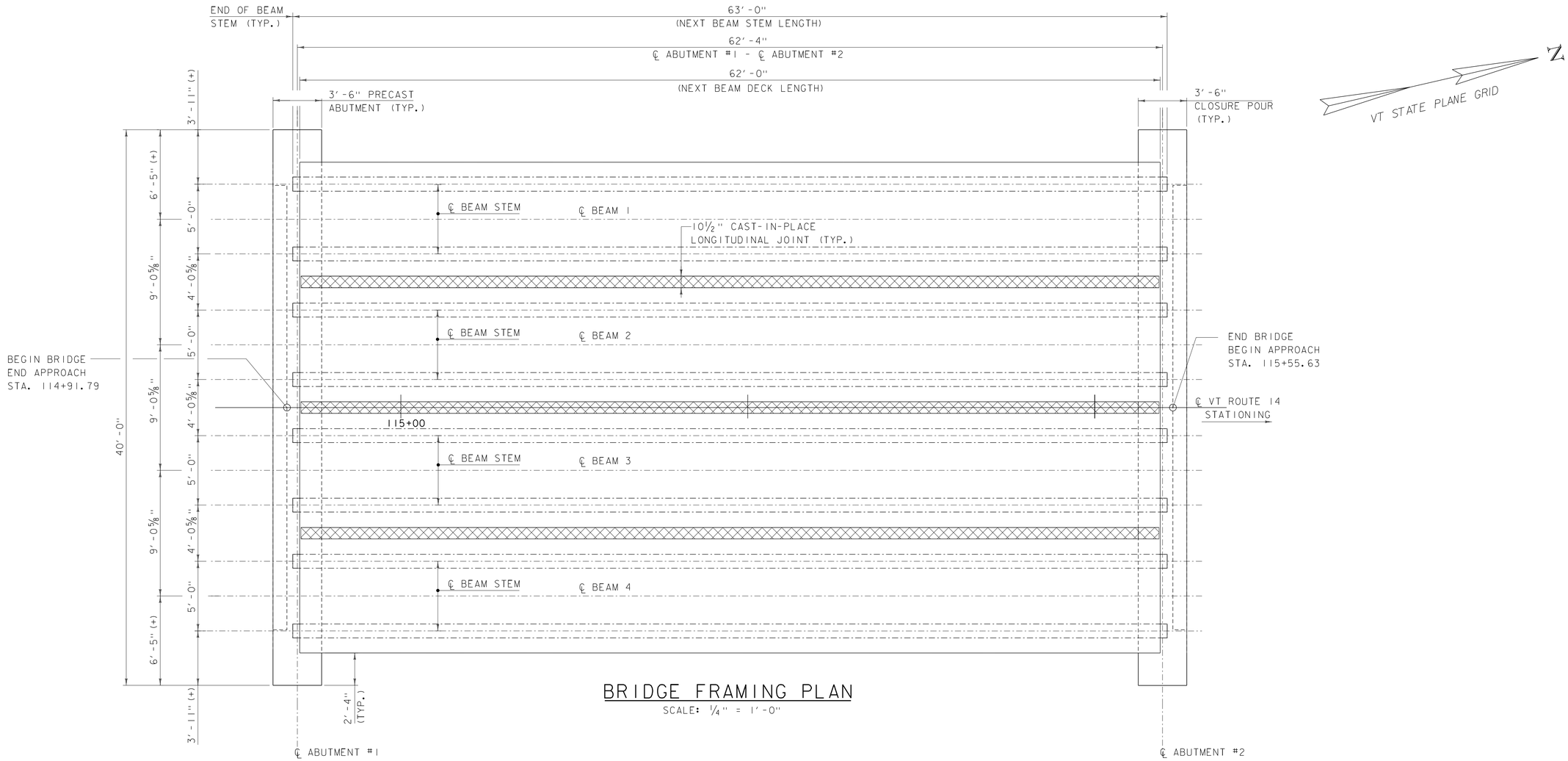

BRIDGE FRAMING PLAN

SCALE: ¼" = 1'-0"

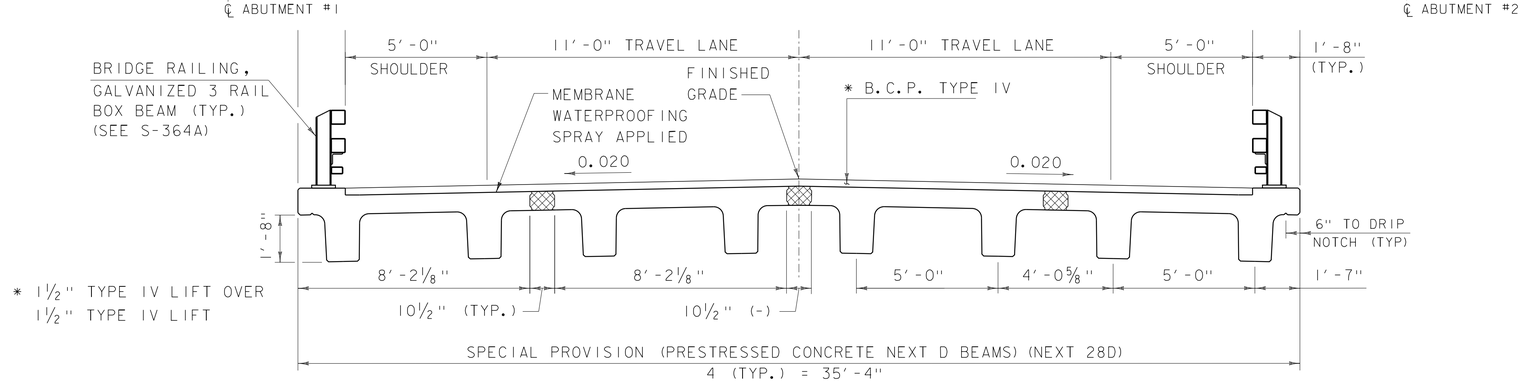

BRIDGE TYPICAL SECTION

SCALE ⅜" = 1'-0"

PARSONS BRINCKERHOFF
650 ELM STREET
MANCHESTER, NH 03101

PROJECT NAME: CALAIS	
PROJECT NUMBER: BHF 037-2(10)	
FILE NAME: z12b144supl.dgn	PLOT DATE: 31-JULY-2015
PROJECT LEADER: G.K.DONINGTON	DRAWN BY: S.BROWN
DESIGNED BY: S.BROWN	CHECKED BY: M.POWELL
FRAMING PLAN	SHEET 25 OF 53

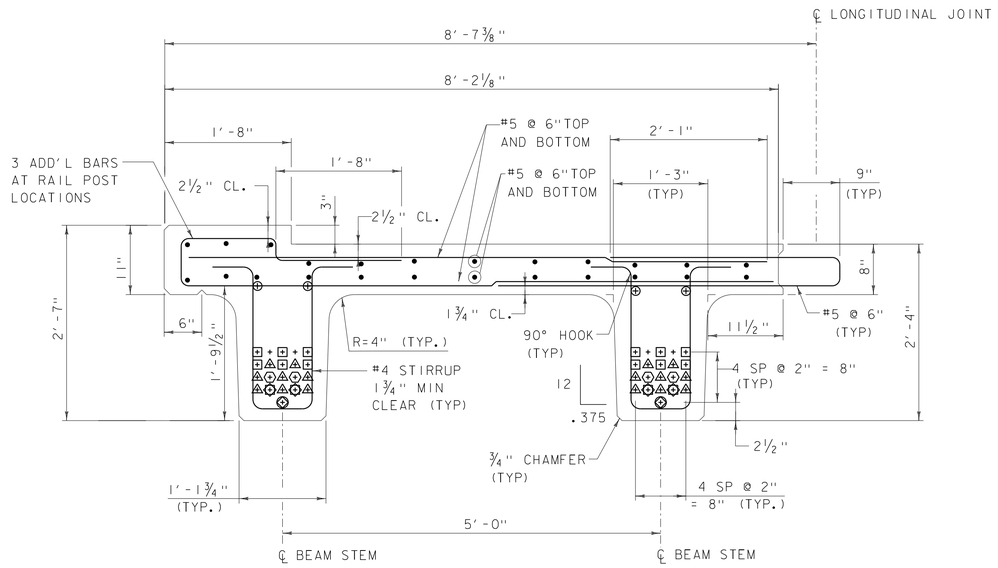

BEAMS 1 AND 4

SCALE: 1" = 1'-0"

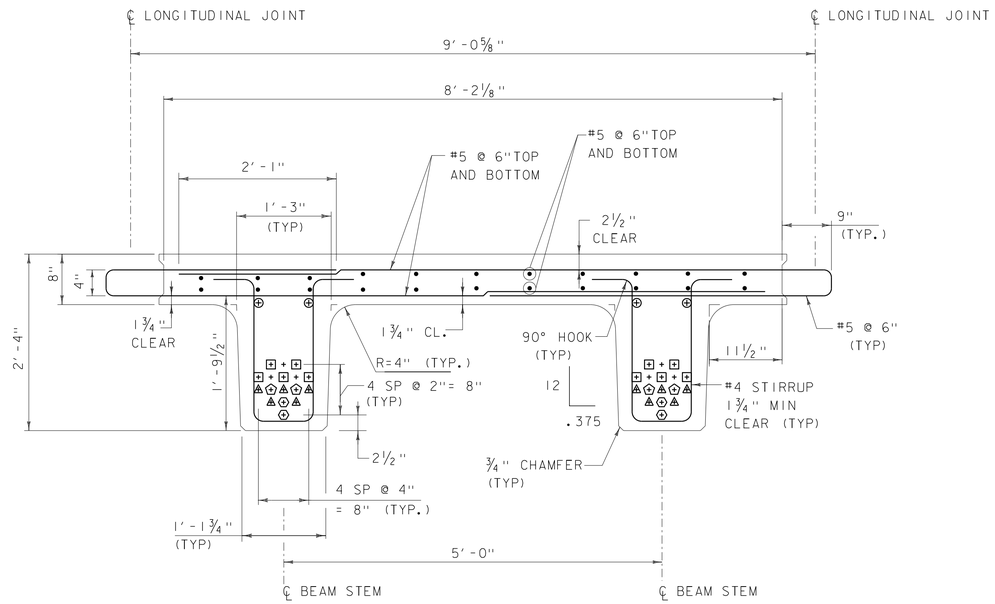

BEAMS 2 AND 3

SCALE: 1" = 1'-0"

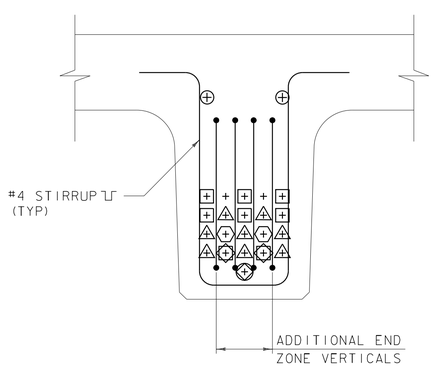

END SECTION BEAMS 1 AND 4

SCALE: 1½" = 1'-0"

NOTE: DECK REINFORCING NOT SHOWN

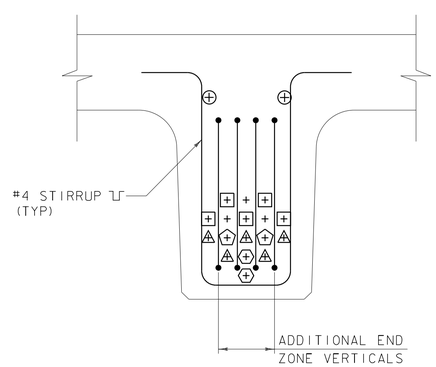

END SECTION BEAMS 2 AND 3

SCALE: 1½" = 1'-0"

NOTE: DECK REINFORCING NOT SHOWN

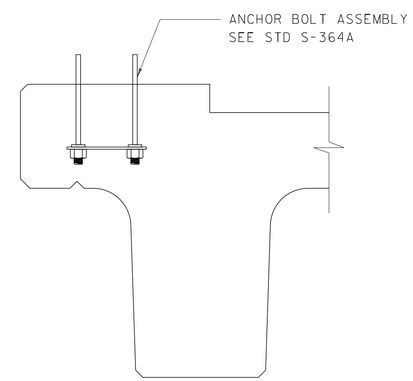

CURB SECTION DETAIL

SCALE: 1½" = 1'-0"

PRESTRESSING NOTES:

1. + DENOTES STRAIGHT 0.60" DIAMETER PRESTRESSING STRANDS
2. ⊕ DENOTES STRAIGHT STRANDS IN TOP FLANGE TO BE DEBONDED FOR 15'-0" AT MIDDLE OF BEAM
3. ⊞ DENOTES STRANDS DEBONDED FOR 0'-6" AT EACH END OF BEAM
4. ⊞ DENOTES FULLY BONDED STRAND EXTENDED 1'-6" FROM BEAM END
5. ⊕ DENOTES STRANDS DEBONDED FOR 8'-0" AT EACH END OF BEAM
6. ⊕ DENOTES STRANDS DEBONDED FOR 12'-0" AT EACH END OF BEAM
7. ⊕ DENOTES STRANDS DEBONDED FOR 14'-0" AT EACH END OF BEAM
8. ⊕ DENOTES STRANDS DEBONDED FOR 16'-0" AT EACH END OF BEAM

PROJECT NAME: CALAIS
PROJECT NUMBER: BHF 037-2(10)

PARSONS BRINCKERHOFF
650 ELM STREET
MANCHESTER, NH 03101

FILE NAME: z12b144Sup2.dgn
PROJECT LEADER: G.K.DONINGTON
DESIGNED BY: S.BROWN
NEXT BEAM DETAILS SHEET (1) OF (2)

PLOT DATE: 31-JULY-2015
DRAWN BY: S.BROWN
CHECKED BY: M.POWELL
SHEET 26 OF 53

SPECIAL PROVISION
HIGH PERFORMANCE CONCRETE
(RAPID SET) (FPQ

TABLE OF DEFLECTIONS
(POSITIVE CAMBER IS UPWARD DEFLECTION)

	INITIAL (IN.)	ERECTION MULT.	ERECTION (IN.)	FINAL MULT.	FINAL (IN.)
PRESTRESSING	2.79	1.80	5.02	2.20	6.14
SELF WEIGHT	-1.25	1.85	-2.31	2.40	-3.00
SUPERIMPOSED DEAD LOADS	———	———	-0.32	3.00	-0.96
TOTAL	1.54		2.39		2.18

BEAMS 1 AND 4 CAMBER ADJUSTMENT

TABLE OF DEFLECTIONS (IN.)
(POSITIVE CAMBER IS UPWARD DEFLECTION)

	INITIAL (IN.)	ERECTION MULT.	ERECTION (IN.)	FINAL MULT.	FINAL (IN.)
PRESTRESSING	2.39	1.80	4.30	2.20	5.26
SELF WEIGHT	-1.25	1.85	-2.31	2.40	-3.00
SUPERIMPOSED DEAD LOADS	———	———	-0.29	3.00	-0.87
TOTAL	1.14		1.70		1.39

BEAMS 2 AND 3 CAMBER ADJUSTMENT

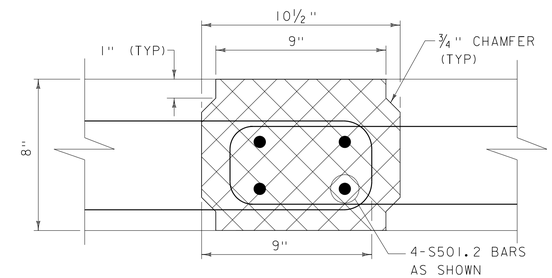

LONGITUDINAL JOINT CONNECTION DETAIL

SCALE: 3" = 1'-0"

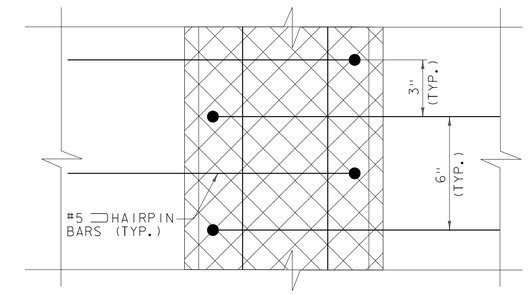

LONGITUDINAL JOINT CONNECTION PLAN

SCALE: 3" = 1'-0"

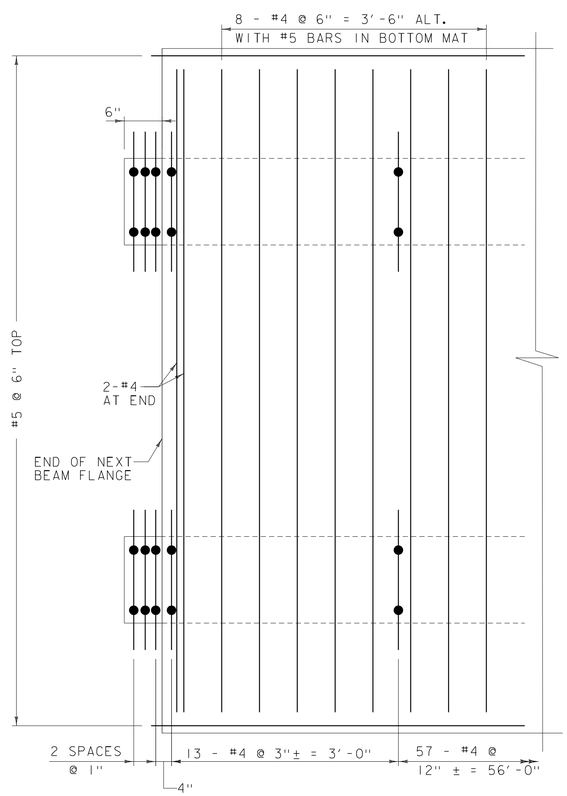

PARTIAL BEAM END REINFORCING PLAN

SCALE: 1" = 1'-0"

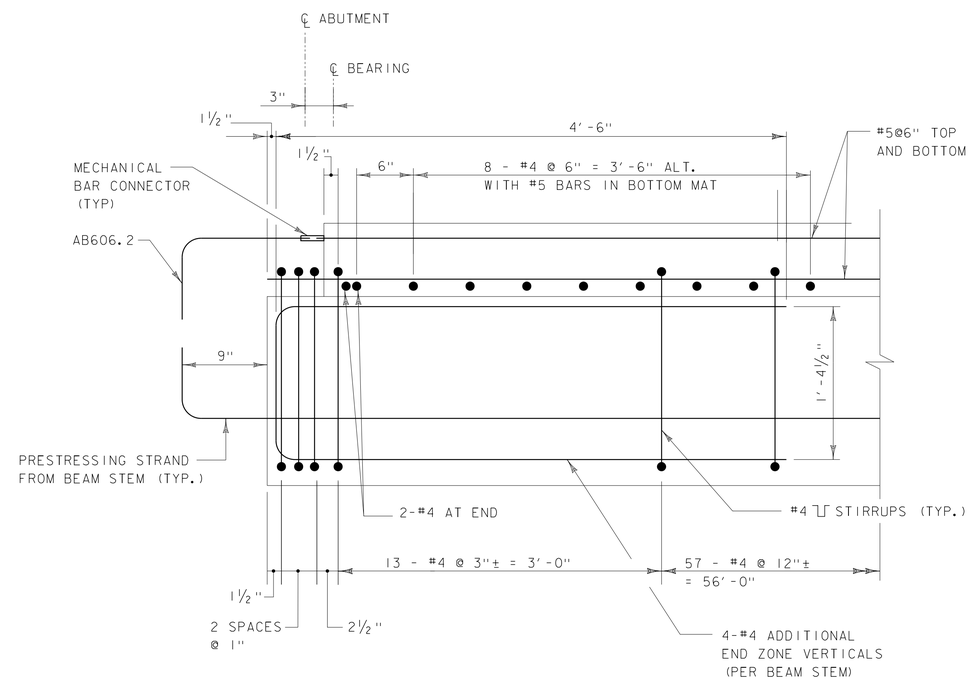

BEAM END REINFORCEMENT

SCALE: 1½" = 1'-0"

*TYPICAL DECK REINFORCEMENT NOT SHOWN FOR CLARITY

PARSONS BRINCKERHOFF
650 ELM STREET
MANCHESTER, NH 03101

PROJECT NAME: CALAIS
PROJECT NUMBER: BHF 037-2(10)

FILE NAME: zl2bl44Sup2.dgn
PROJECT LEADER: G.K.DONINGTON
DESIGNED BY: S.BROWN
NEXT BEAM DETAILS SHEET (2) OF (2)

PLOT DATE: 31-JULY-2015
DRAWN BY: S.BROWN
CHECKED BY: M.POWELL
SHEET 27 OF 53

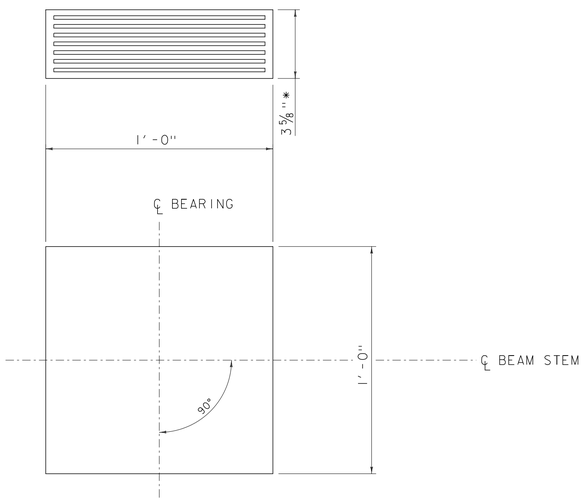

ELASTOMERIC BEARING DETAIL

SCALE: 3"=1'-0"

*2 - ¼" EXTERIOR LAYERS OF ELASTOMER
6 - ⅜" INTERIOR LAYERS OF ELASTOMER
7 - ⅛" STEEL REINFORCING PLATES

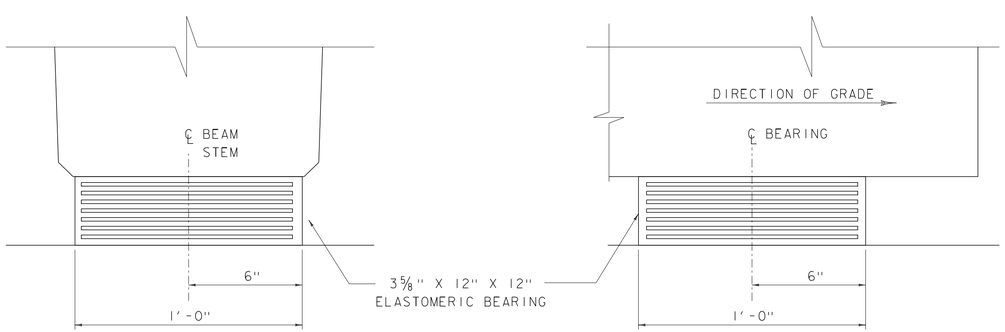

FRONT ELEVATION

SCALE: 3"=1'-0"

SIDE ELEVATION

SCALE: 3"=1'-0"

BEARING NOTES:

1. BEARINGS SHALL CONFORM TO THE APPLICABLE SUBSECTIONS OF STANDARD SPECIFICATIONS SECTIONS 531 AND 731.

2. ALL REINFORCEMENT BETWEEN LAYERS OF ELASTOMER SHALL BE STEEL MEETING THE REQUIREMENTS OF SUBSECTION 714.02. ALL INTERNAL STEEL PLATES SHALL BE SAND BLASTED AND FREE OF COATINGS, RUST AND MILL SCALE. THE PLATES SHALL BE FREE OF SHARP EDGES AND BURRS.

3. STEEL REINFORCED ELASTOMERIC BEARINGS SHALL HAVE A MINIMUM ¼" EDGE SEAL OF ELASTOMER INTEGRAL WITH BEARING OVER ALL INTERNAL PLATES.

4. THE ELASTOMER SHALL BE 60 DUROMETER SHORE A.

5. THE CONTRACTOR IS ADVISED TO HAVE A MINIMUM OF 32 -¼" X 10" X 9" GALVANIZED STEEL SHIMS AVAILABLE FOR USE FOR ELEVATION ADJUSTMENTS UPON THE SETTING OF THE SUPERSTRUCTURE UNITS. THE SHIMS SHALL BE FABRICATED ACCORDING TO SECTION 531 AND WILL BE INCLUDED IN THE UNIT PRICE BID FOR CONTRACT ITEM 531.11, "BEARING DEVICE ASSEMBLY, STEEL REINFORCED ELASTOMERIC PAD".

6. ALL BEARINGS WERE DESIGNED PER METHOD A OF AASHTO LRFD BRIDGE DESIGN SPECIFICATIONS 6TH EDITION AND ITS LATEST REVISIONS.

7. BEARINGS SHALL BE CLEARLY MARKED TO INDICATE ORIENTATION WITH RESPECT TO THE CENTERLINE OF BEARING.

8. DESIGN SERVICE LOADS PER BEARING : (DESIGN METHOD A)
   MAX DEAD LOAD: 30.06 KIP
   MAX LIVE LOAD: 44.86 KIP

PROJECT NAME: CALAIS
PROJECT NUMBER: BHF 037-2(10)

PARSONS BRINCKERHOFF
650 ELM STREET
MANCHESTER, NH 03101

FILE NAME: z12b144brg.dgn
PROJECT LEADER: G.K.DONINGTON
DESIGNED BY: S.BROWN
ELASTOMERIC BEARING DETAILS

PLOT DATE: 31-JULY-2015
DRAWN BY: S.BROWN
CHECKED BY: A.STOCKIN
SHEET 28 OF 53

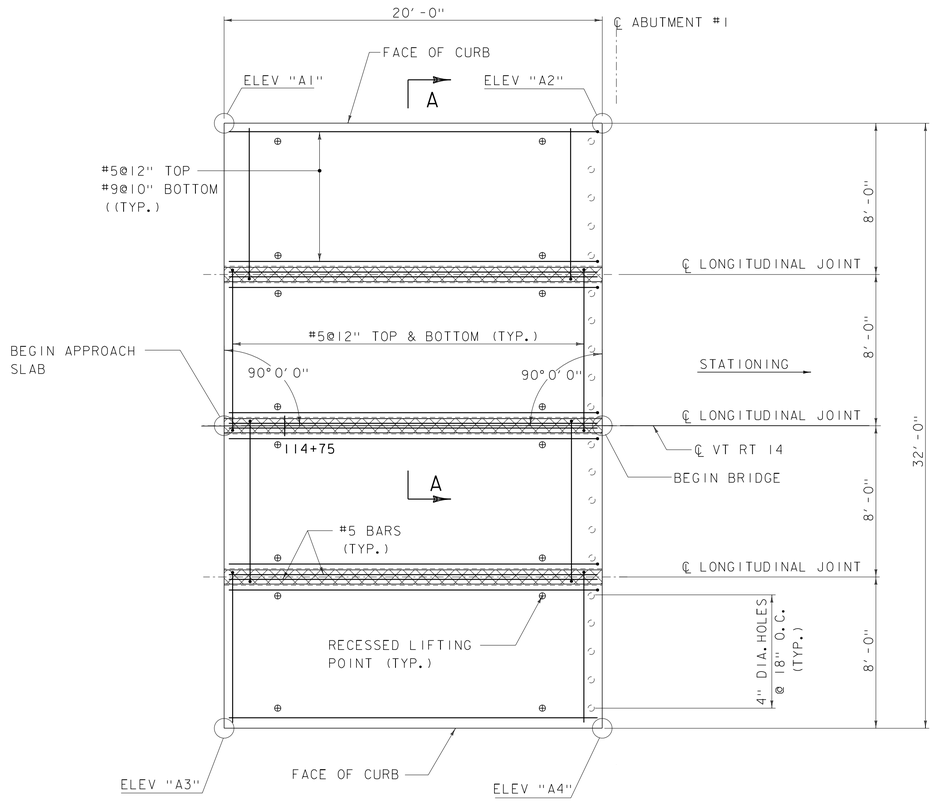

APPROACH SLAB #1 - PLAN

SCALE: 1/4" = 1'-0"

NOTE:
FABRICATOR TO DESIGN LIFTING POINTS AND INCLUDE CALCULATIONS WITH SUBMITTAL.

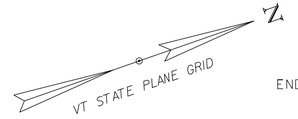

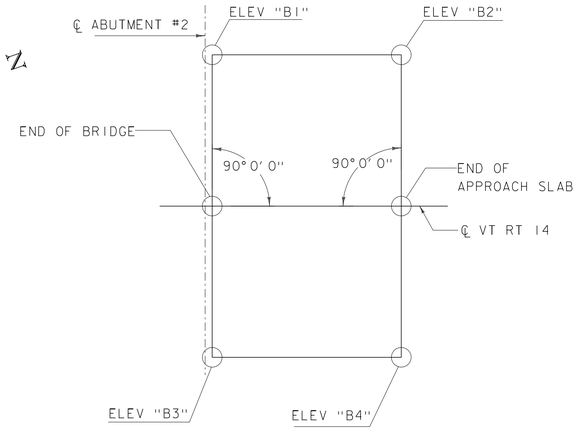

APPROACH SLAB #2 - PLAN

SCALE: 1/8" = 1'-0"

	STATION	OFFSET	ELEVATION
A1	114+71.79	16.00' LT	717.15
A2	114+91.79	16.00' LT	717.13
BEGIN AS 1	114+71.79	0.00'	717.47
BEGIN BRIDGE	114+91.79	0.00'	717.45
A3	114+71.79	16.00' RT	717.15
A4	114+91.79	16.00' RT	717.13
B1	115+55.63	16.00' LT	717.36
B2	115+75.63	16.00' LT	717.53
END BRIDGE	115+55.63	0.00'	717.68
END AS 2	115+75.63	0.00'	717.85
B3	115+55.63	16.00' RT	717.36
B4	115+75.63	16.00' RT	717.53

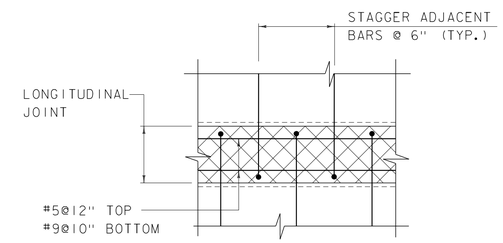

JOINT DETAIL PLAN

SCALE: 1" = 1'-0"

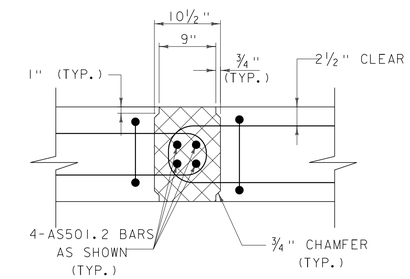

JOINT DETAIL SECTION

SCALE: 1" = 1'-0"

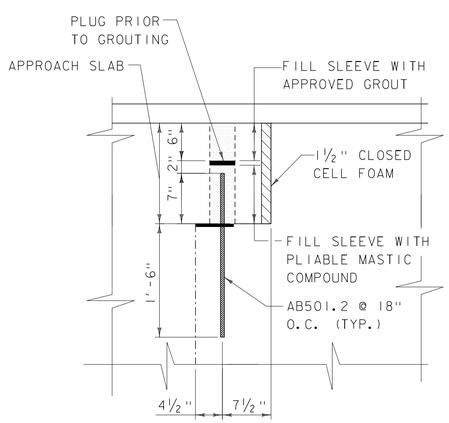

APPROACH SLAB DOWEL DETAIL

SCALE: 1" = 1'-0"

NOTE:
THE APPROACH SLAB DOWELS SHALL BE CAST INTO THE CLOUSURE POUR APPROACH SLAB SEAT. THE BOTTOM LENGTH OF THE SLEEVE WITHIN THE APPROACH SLAB SHALL BE FILLED WITH A PLIABLE MASTIC COMPOUND. THE UPPER PORTION SHALL BE PLUGGED AND THEN FILLED WITH AN APPROVED GROUT. ALL COSTS ASSOCIATED WITH THIS WORK SHALL BE PAID UNDER ITEM 540.10 PRECAST CONCRETE STRUCTURE (APPROACH SLAB #1) OR (APPROACH SLAB #2) AS APPROPRIATE.

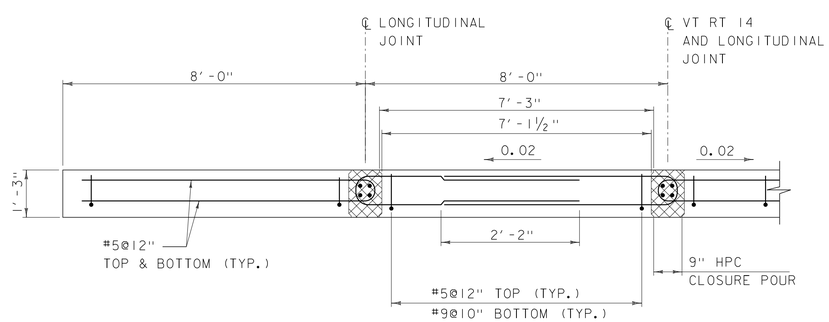

SECTION A-A

SCALE: 1/2" = 1'-0"

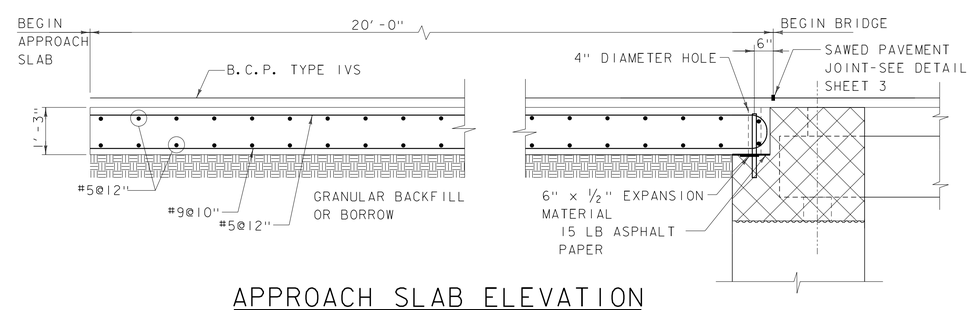

APPROACH SLAB ELEVATION

SCALE: 1/2" = 1'-0"

SPECIAL PROVISION
HIGH PERFORMANCE CONCRETE
(RAPID SET) (FPQ)

PARSONS BRINCKERHOFF
650 ELM STREET
MANCHESTER, NH 03101

PROJECT NAME: CALAIS
PROJECT NUMBER: BHF 037-2(10)

FILE NAME: z12b144appslab.dgn
PROJECT LEADER: G.K.DONINGTON
DESIGNED BY: S.BROWN
APPROACH SLAB DETAILS

PLOT DATE: 31-JULY-2015
DRAWN BY: S.BROWN
CHECKED BY: A.STOCKIN
SHEET 29 OF 53

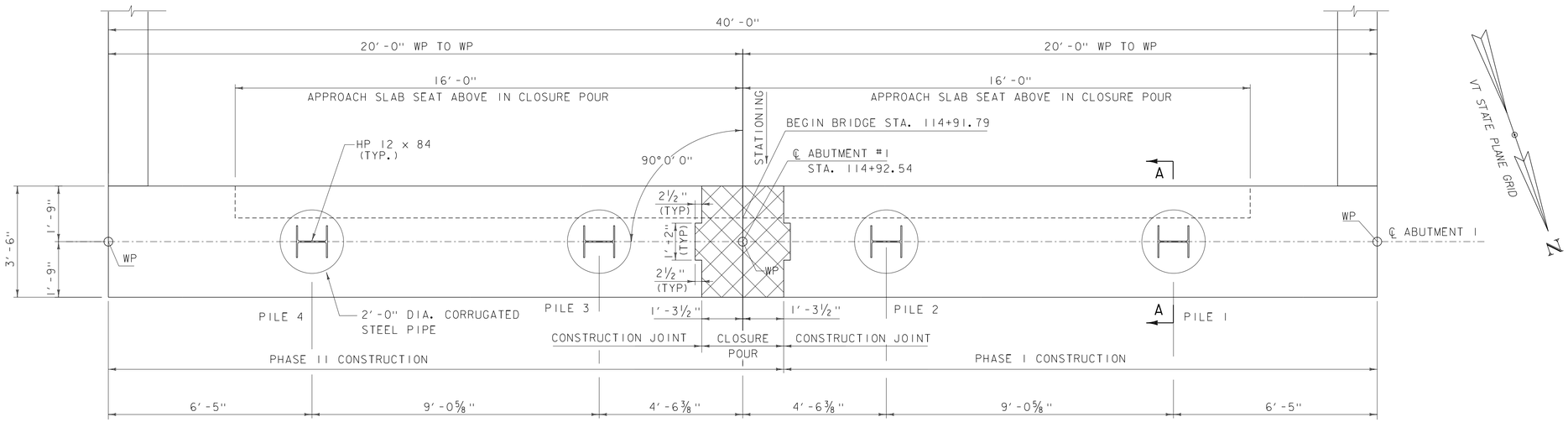

ABUTMENT #1 PLAN (PCU 1)

SCALE: ½" = 1'-0"

PCU 1 ELEVATIONS

ELEV "A"	714.41
ELEV "B"	707.91
ELEV "C"	714.81
ELEV "D"	714.79

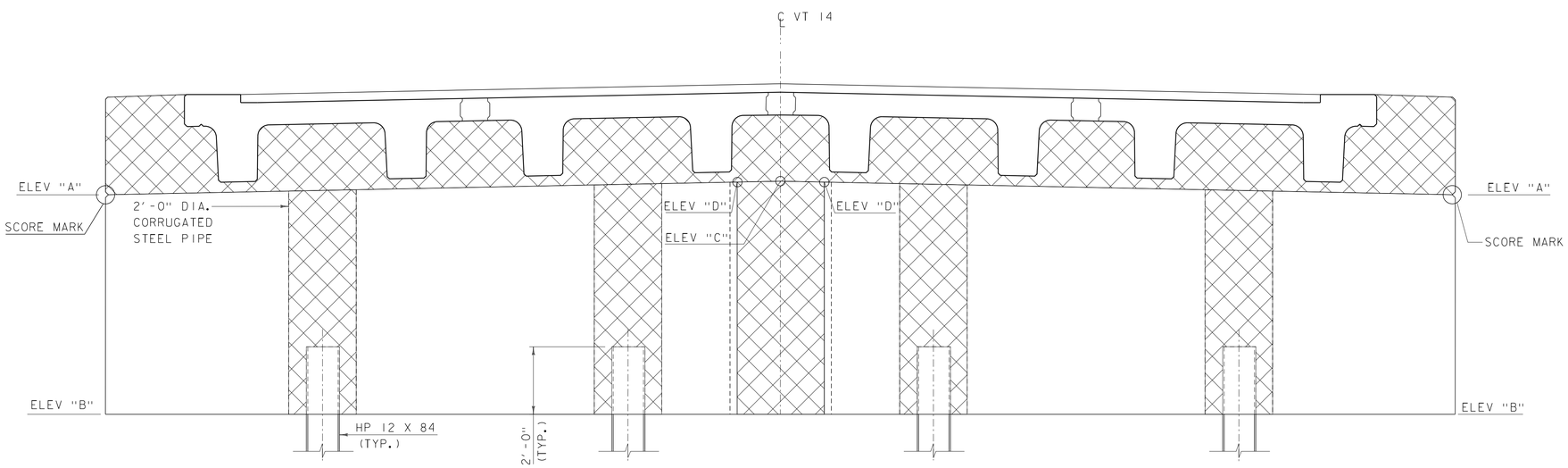

ABUTMENT #1 ELEVATION (PCU 1)

SCALE: ½" = 1'-0"

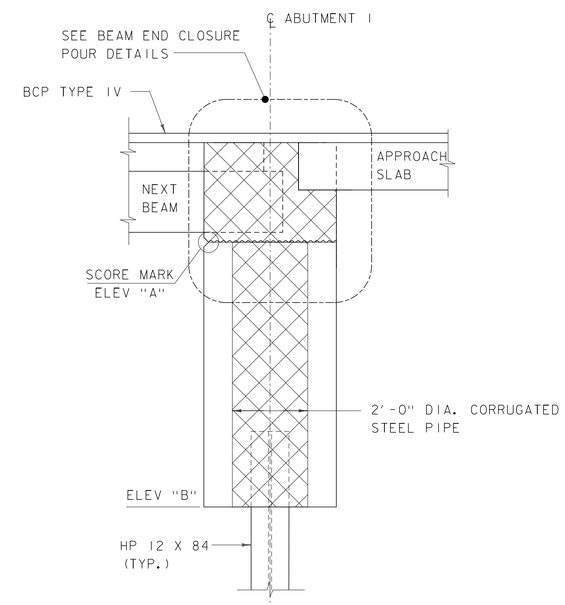

SECTION A-A (PCU 1)

SCALE: ½" = 1'-0"

ITEM 900.608 SPECIAL PROVISION
(HIGH PERFORMANCE CONCRETE, RAPID SET) (FPO)

PARSONS BRINCKERHOFF
650 ELM STREET
MANCHESTER, NH 03101

PROJECT NAME: CALAIS
PROJECT NUMBER: BHF 037-2(10)

FILE NAME: z12b144sub.dgn
PROJECT LEADER: G.K.DONINGTON
DESIGNED BY: S.BROWN
ABUTMENT 1 PLAN

PLOT DATE: 31-JULY-2015
DRAWN BY: W.GERHOLD
CHECKED BY: A.STOCKIN
SHEET 30 OF 53

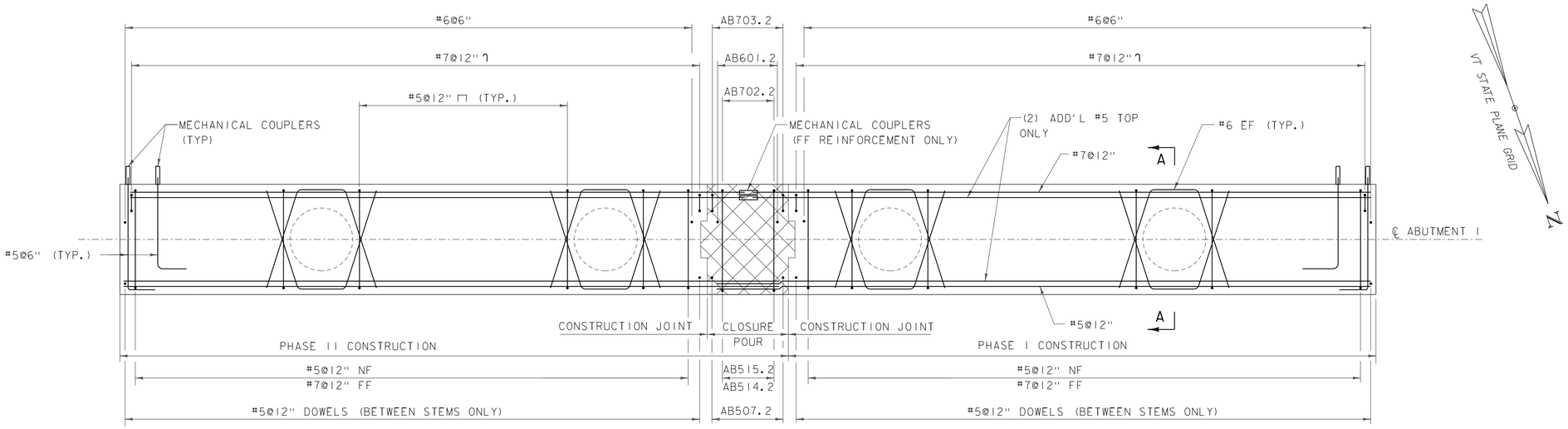

ABUTMENT #1 REINFORCING PLAN (PCU 1)

SCALE: ½" = 1'-0"

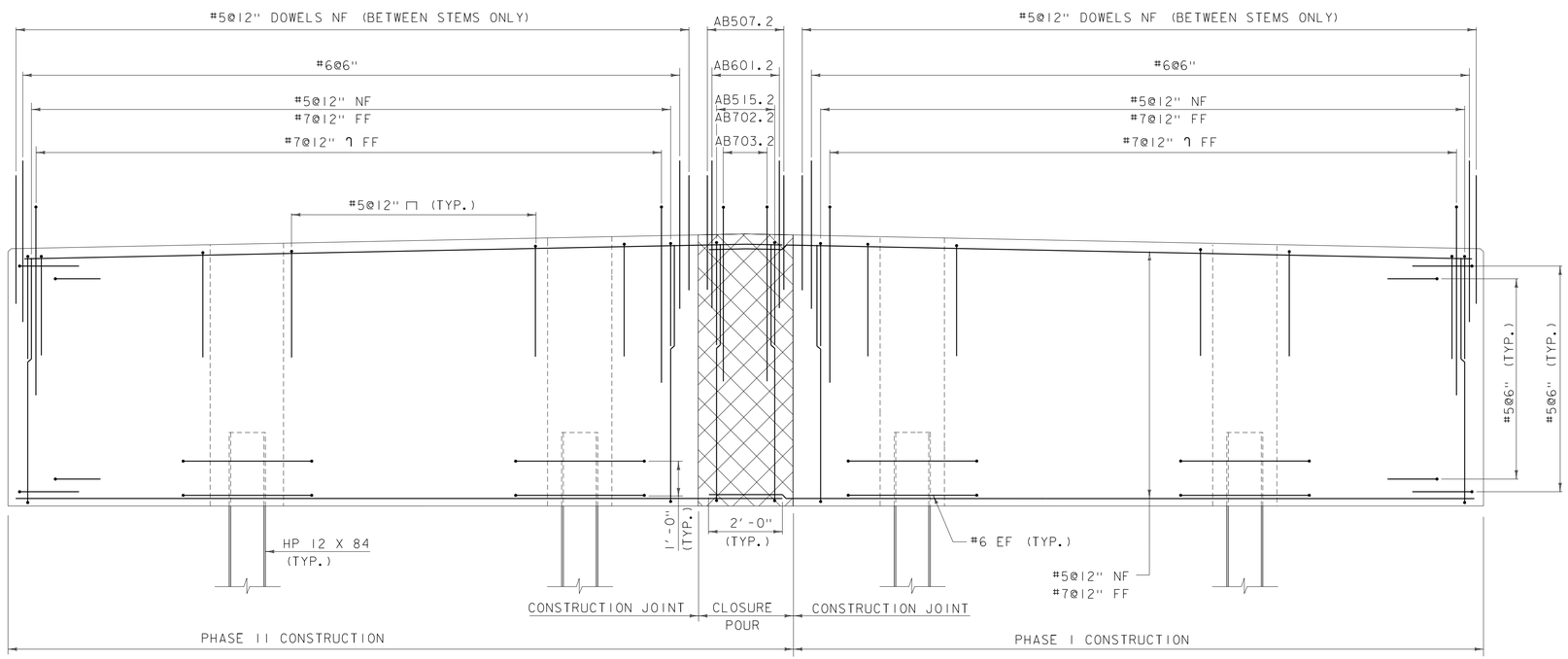

ABUTMENT #1 REINFORCING ELEVATION (PCU 1)

SCALE: ½" = 1'-0"

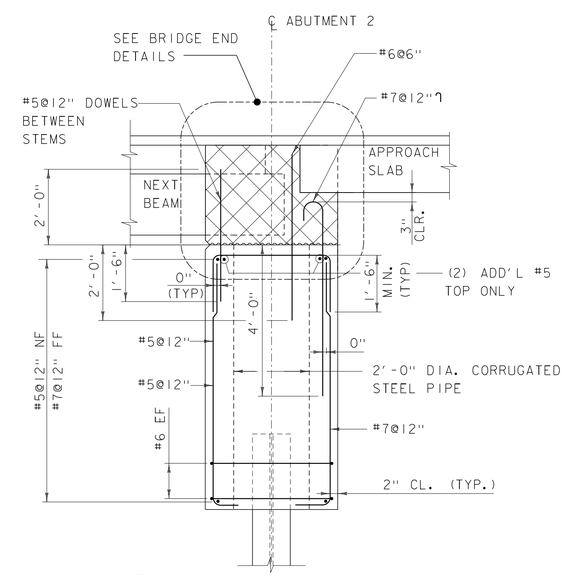

SECTION A-A (PCU 1)

SCALE: ½" = 1'-0"

ITEM 900.608 SPECIAL PROVISION
(HIGH PERFORMANCE CONCRETE, RAPID SET) (FPQ)

PARSONS BRINCKERHOFF
650 ELM STREET
MANCHESTER, NH 03101

PROJECT NAME: CALAIS	
PROJECT NUMBER: BHF 037-2(10)	
FILE NAME: z12b144sub3.dgn	PLOT DATE: 31-JULY-2015
PROJECT LEADER: G.K.DONINGTON	DRAWN BY: W.GERHOLD
DESIGNED BY: S.BROWN	CHECKED BY: A.STOCKIN
ABUTMENT 1 REINFORCEMENT PLAN	SHEET 31 OF 53

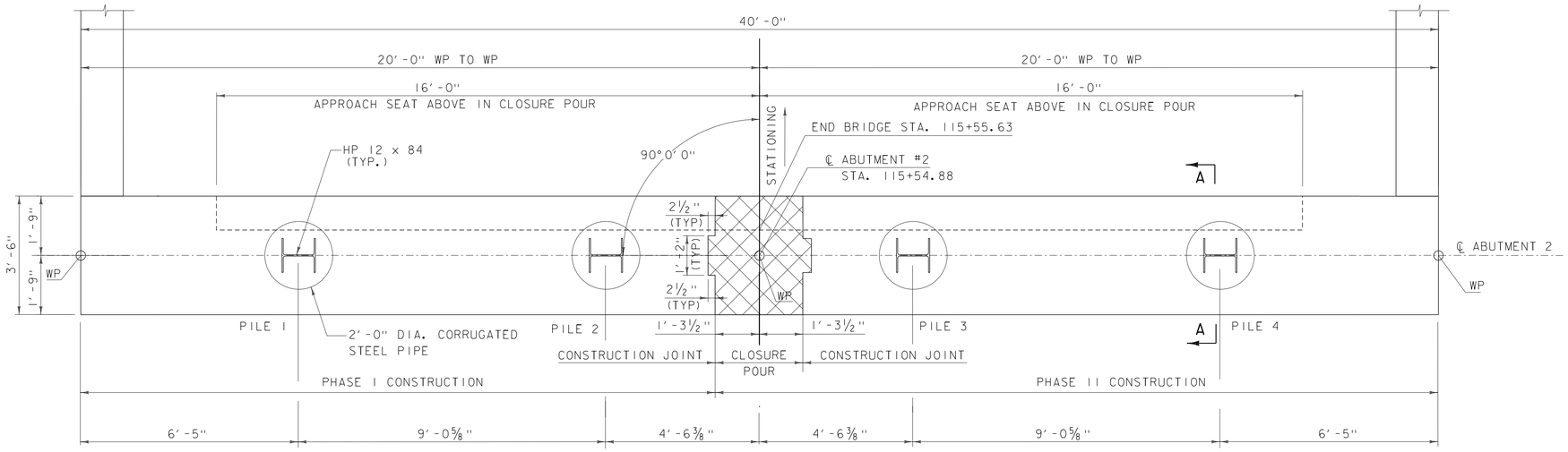

ABUTMENT #2 PLAN (PCU 4)

SCALE: ½" = 1'-0"

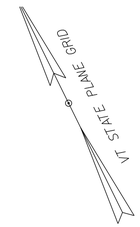

PCU 1 ELEVATIONS

ELEV "A"	714.62
ELEV "B"	708.12
ELEV "C"	715.02
ELEV "D"	715.00

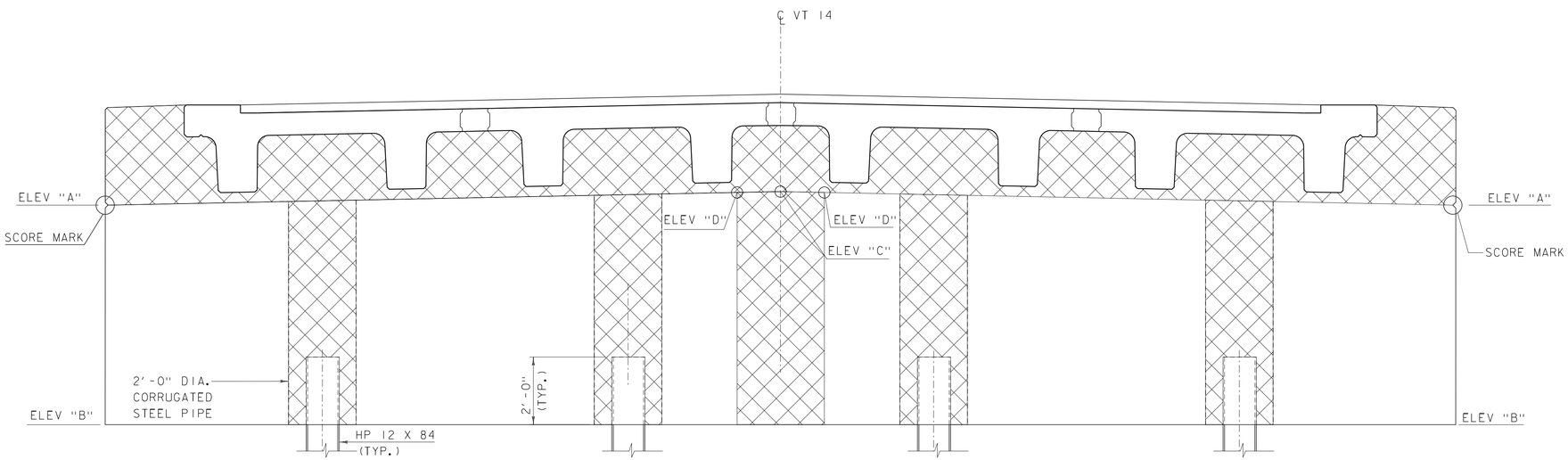

ABUTMENT #2 ELEVATION (PCU 4)

SCALE: ½" = 1'-0"

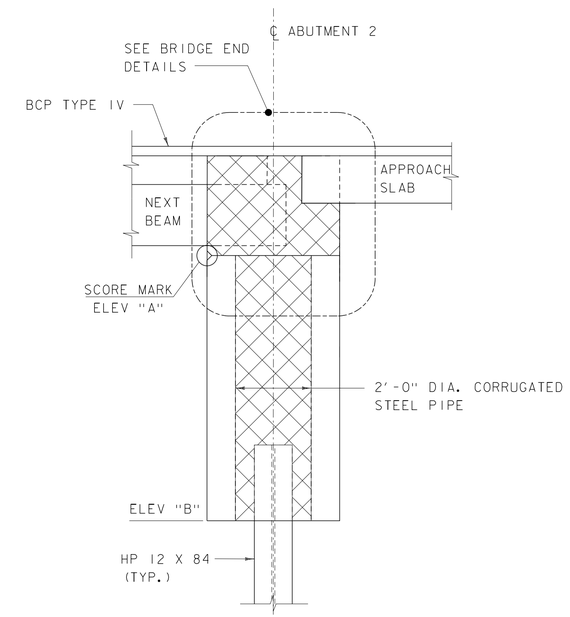

SECTION A-A (PCU 4)

SCALE: ½" = 1'-0"

ITEM 900.608 SPECIAL PROVISION
(HIGH PERFORMANCE CONCRETE, RAPID SET) (FPQ)

PARSONS BRINCKERHOFF
650 ELM STREET
MANCHESTER, NH 03101

PROJECT NAME: CALAIS
PROJECT NUMBER: BHF 037-2(10)

FILE NAME: z12b144sub2.dgn
PROJECT LEADER: G.K.DONINGTON
DESIGNED BY: S.BROWN
ABUTMENT 2 PLAN

PLOT DATE: 31-JULY-2015
DRAWN BY: W.GERHOLD
CHECKED BY: A.STOCKIN
SHEET 32 OF 53

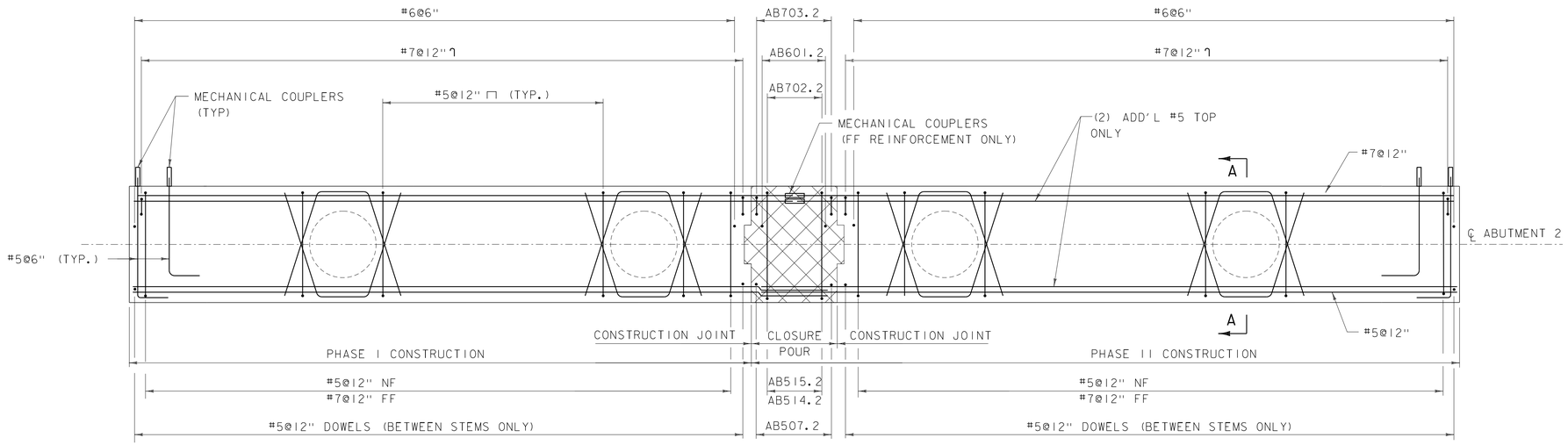

ABUTMENT #2 REINFORCING PLAN (PCU 4)

SCALE: ½" = 1'-0"

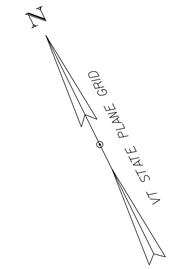

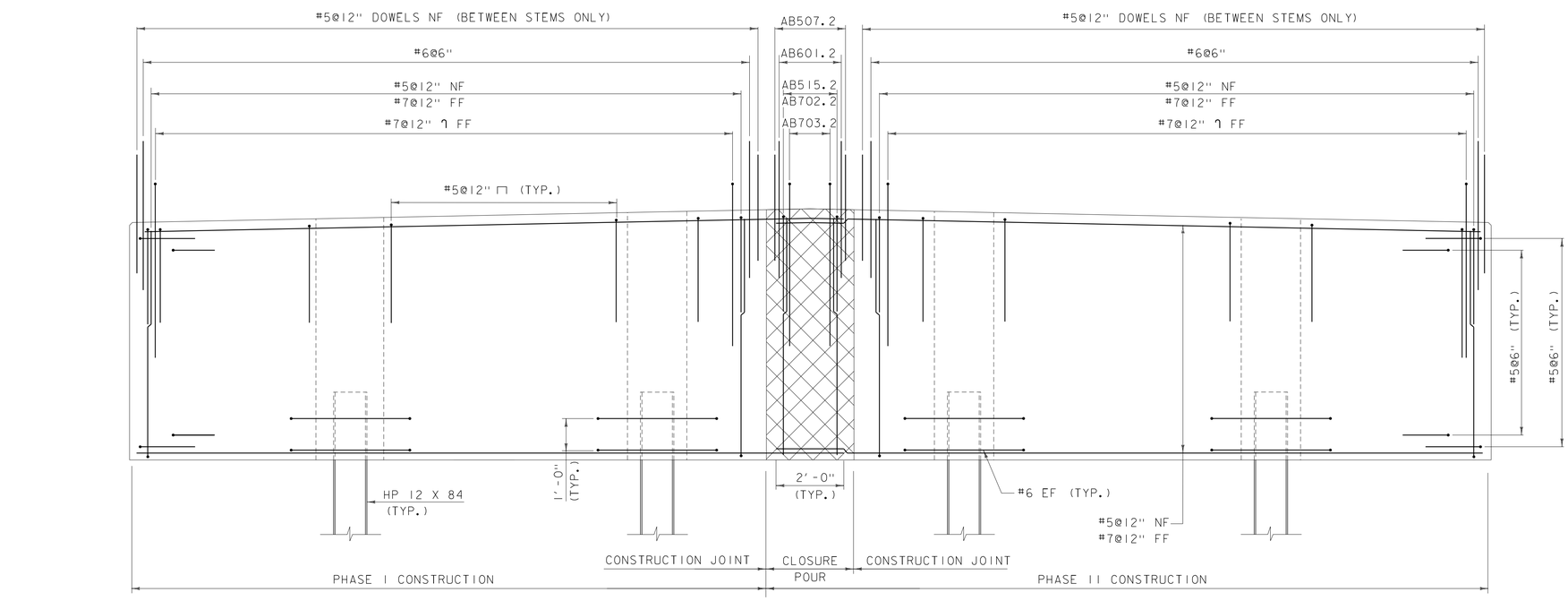

ABUTMENT #2 REINFORCING ELEVATION (PCU 4)

SCALE: ½" = 1'-0"

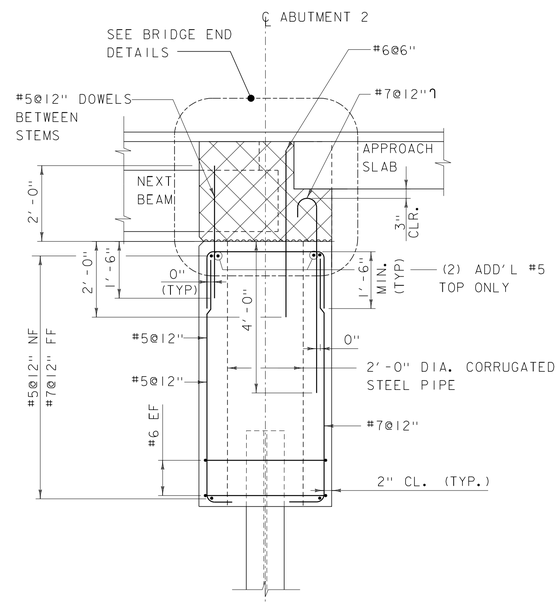

SECTION A-A (PCU 4)

SCALE: ½" = 1'-0"

ITEM 900.608 SPECIAL PROVISION
(HIGH PERFORMANCE CONCRETE, RAPID SET) (FPQ)

PARSONS BRINCKERHOFF
650 ELM STREET
MANCHESTER, NH 03101

PROJECT NAME: CALAIS	
PROJECT NUMBER: BHF 037-2(10)	
FILE NAME: z12b144sub4.dgn	PLOT DATE: 31-JULY-2015
PROJECT LEADER: G.K.DONINGTON	DRAWN BY: W.GERHOLD
DESIGNED BY: S.BROWN	CHECKED BY: A.STOCKIN
ABUTMENT 2 REINFORCEMENT PLAN	SHEET 33 OF 53

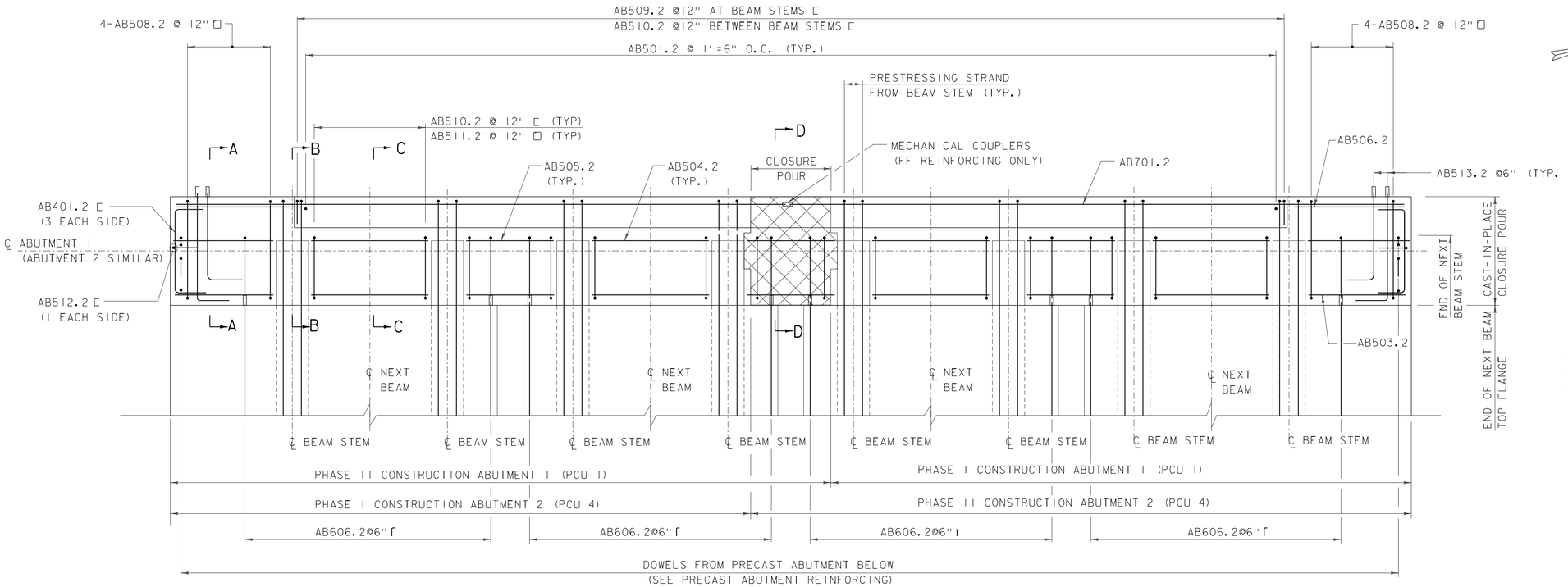

BEAM END CLOSURE POUR REINFORCING PLAN

SCALE: ½" = 1'-0"

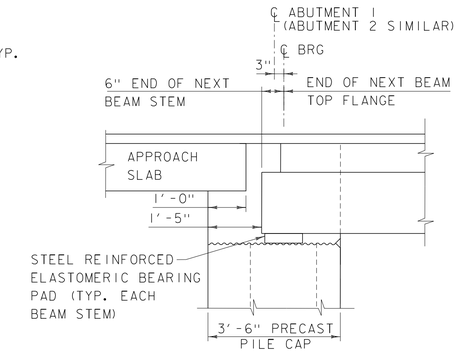

TYPICAL SECTION BEAM END CLOSURE POUR MASONRY

SCALE: ½" = 1'-0"

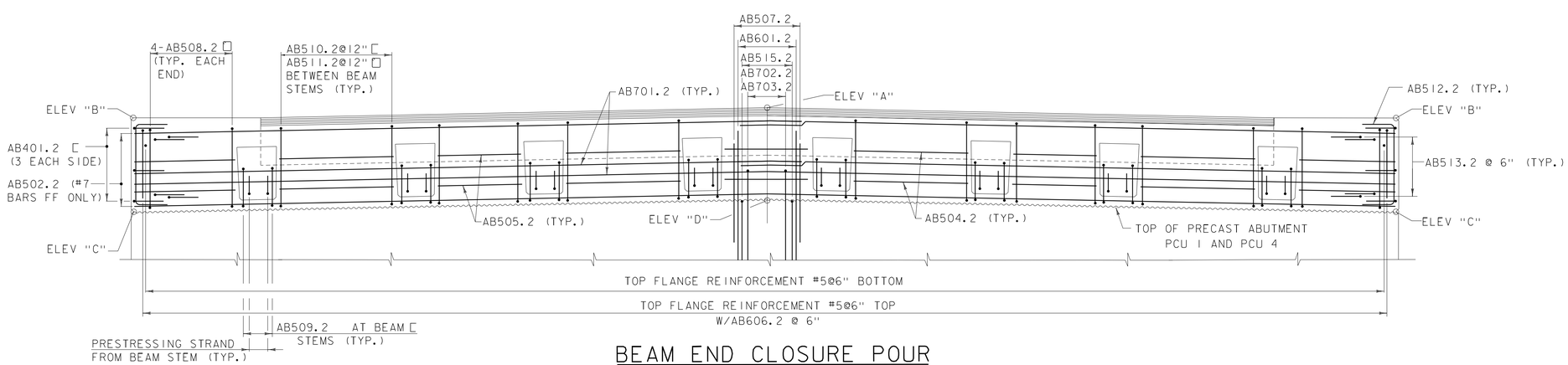

BEAM END CLOSURE POUR REINFORCING ELEVATION

SCALE: ½" = 1'-0"

	ABUT 1	ABUT 2
ELEV "A"	717.70	717.91
ELEV "B"	717.38	717.59
ELEV "C"	714.41	714.62
ELEV "D"	714.81	715.02

BEAM END CLOSURE POUR ELEVATIONS

PARSONS BRINCKERHOFF
650 ELM STREET
MANCHESTER, NH 03101

PROJECT NAME: CALAIS
PROJECT NUMBER: BHF 037-2(10)

FILE NAME: z12b144sub5.dgn
PROJECT LEADER: G.K.DONINGTON
DESIGNED BY: S.BROWN
BEAM END CLOSURE POUR DETAILS 1 OF 2

PLOT DATE: 31-JULY-2015
DRAWN BY: W.GERHOLD
CHECKED BY: B.HOLSAPPLE
SHEET 34 OF 53

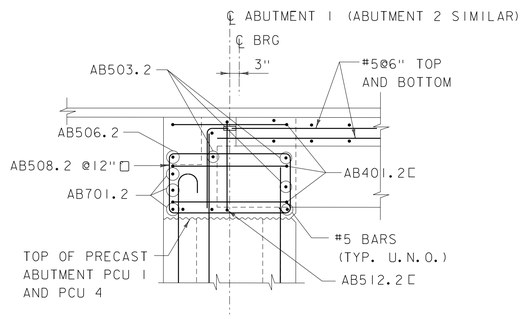

SECTION A-A

SCALE: ½" = 1'-0"

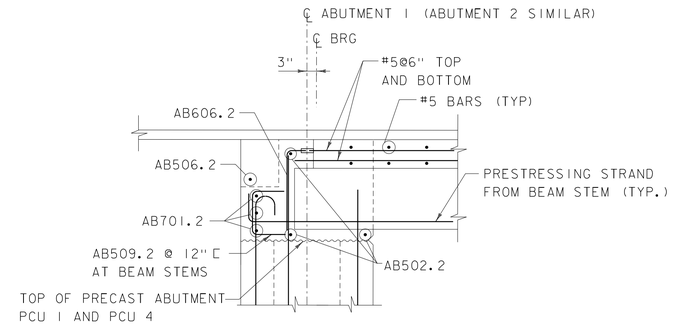

SECTION B-B

SCALE: ½" = 1'-0"

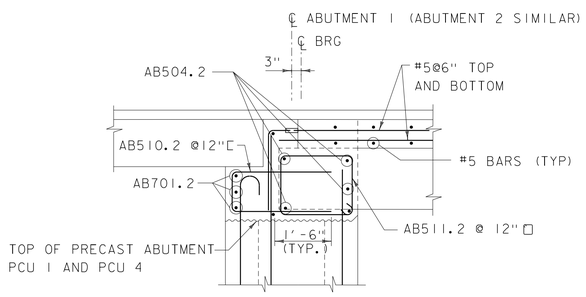

SECTION C-C

SCALE: ½" = 1'-0"

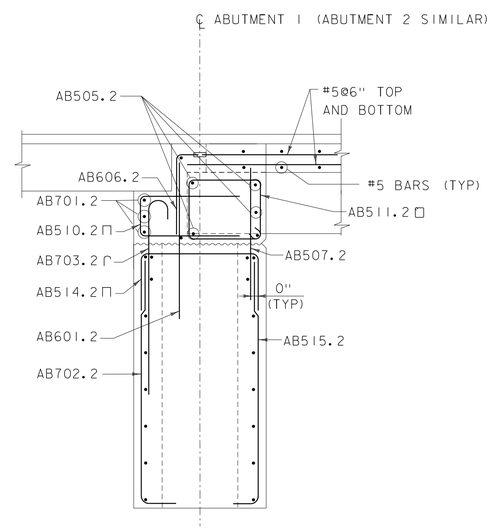

SECTION D-D

SCALE: ½" = 1'-0"

PROJECT NAME: CALAIS	
PROJECT NUMBER: BHF 037-2(10)	
PARSONS BRINCKERHOFF 650 ELM STREET MANCHESTER, NH 03101	FILE NAME: zl2bl44sub5.dgn PROJECT LEADER: G.K.DONINGTON DESIGNED BY: S.BROWN BEAM END CLOSURE POUR DETAILS 2 OF 2
	PLOT DATE: 31-JULY-2015 DRAWN BY: W.GERHOLD CHECKED BY: B.HOLSAPPLE SHEET 35 OF 53

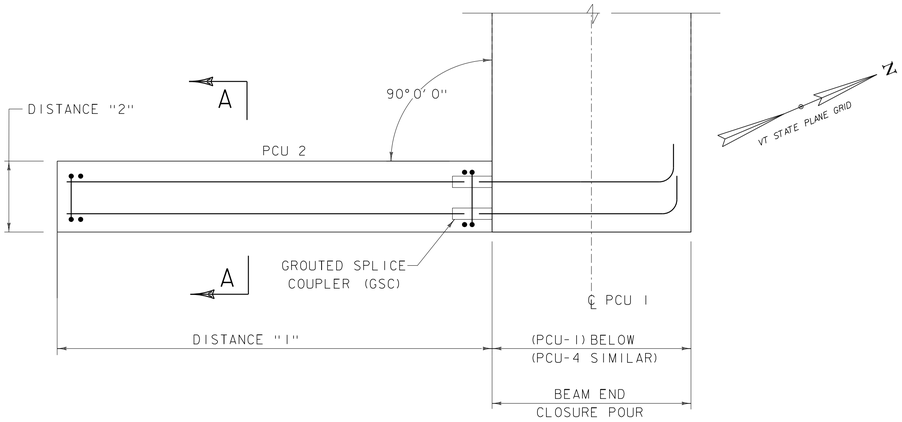

WINGWALL PLAN (PCU 2)

(PCU 2 SHOWN PCU 3, PCU 5, AND PCU 6 SIMILAR)
SCALE: 3/4" = 1'-0"

PCU 2-3, PCU 5-6 ELEVATIONS				
	(PCU 2)	(PCU 3)	(PCU 5)	(PCU 6)
ELEV "A"	717.30	717.30	717.51	717.51
ELEV "B"	707.91	707.91	708.12	708.12
ELEV "C"	717.30	717.30	717.51	717.51
DIST "1"	7'-8"	7'-8"	10'-0"	10'-0"
DIST "2"	1'-3"	1'-3"	1'-3"	1'-3"

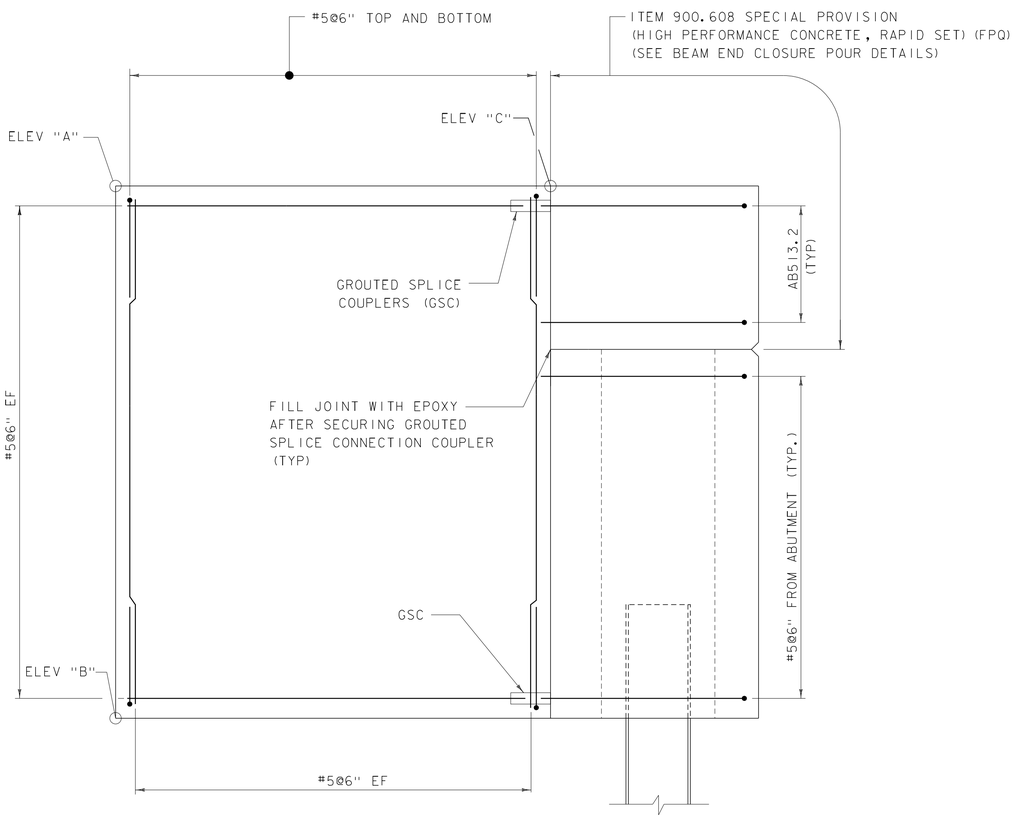

WINGWALL ELEVATION (PCU 2)

(PCU 2 SHOWN PCU 3, PCU 5, AND PCU 6 SIMILAR)
SCALE: 3/4" = 1'-0"

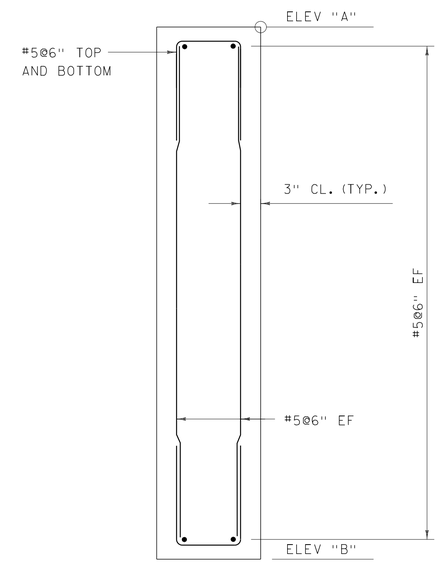

WINGWALL SECTION A-A (PCU 2)

(PCU 2 SHOWN PCU 3, PCU 5, AND PCU 6 SIMILAR)
SCALE: 3/4" = 1'-0"

NOTE:

NF = NEAR FACE
FF = FAR FACE
EF = EACH FACE
3" CLEAR, UNLESS OTHERWISE
SPECIFIED ON THE PLANS.

PROJECT NAME: CALAIS
PROJECT NUMBER: BHF 037-2(10)

PARSONS BRINCKERHOFF
650 ELM STREET
MANCHESTER, NH 03101

FILE NAME: z12b144Sub6.dgn
PROJECT LEADER: G.K.DONINGTON
DESIGNED BY: S.BROWN
WINGWALL DETAILS SHEET

PLOT DATE: 31-JULY-2015
DRAWN BY: W.GERHOLD
CHECKED BY: A.STOCKIN
SHEET 36 OF 53

STATE OF VERMONT
AGENCY OF TRANSPORTATION

REINFORCING STEEL SCHEDULE

ITEM	EACH	SIZE	LENGTH	MARK	TYPE	A	B	C	D	E	F	G	H	J	K	R	O
NEXT Beam Joints																	
	12	5	62'- 0"	S501.2	STR												
Approach Slab 1																	
	12	5	19'- 6"	1AS501.2	STR												
Approach Slab 2																	
	12	5	19'- 6"	2AS501.2	STR												
Abutment 1																	
	23	5	2'- 1"	1AB501.2	STR												
	6	5	20'- 9"	1AB502.2	STR												
	6	5	2'- 10"	1AB503.2	STR												
	16	5	3'- 3"	1AB504.2	STR												
✳	13	5	2'- 3"	1AB505.2	STR												
	2	5	3'- 6"	1AB506.2	STR												
	4	5	3'- 6"	1AB507.2	STR												
✳	8	6	4'- 4"	1AB601.2	STR												
	6	7	19'- 6"	1AB701.2	STR												
✳	7	4	5'- 0"	1AB401.2	S10		1'- 0"	3'- 0"	1'- 0"								
	8	5	9'- 6"	1AB508.2	T1	0'- 4"	3'- 0"	1'- 5"	3'- 0"	1'- 5"		0'- 4"					
	24	5	2'- 6"	1AB509.2	S10		0'- 10"	0'- 10"	0'- 10"								
	32	5	6'- 4"	1AB510.2	S10		2'- 9"	0'- 10"	2'- 9"								
	32	5	8'- 10"	1AB511.2	T1	0'- 4"	2'- 0"	1'- 5"	2'- 0"	1'- 5"		0'- 4"					
	2	5	4'- 1"	1AB512.2	S10		1'- 0"	2'- 1"	1'- 0"								
	24	5	3'- 11"	1AB513.2	21	0'- 0"	0'- 8"	3'- 3"						0'- 0"			
	4	5	6'- 0"	1AB514.2	S10		1'- 6"	3'- 0"	1'- 6"								
	4	5	6'- 8"	1AB515.2	S10		0'- 8"	6'- 0"	0'- 0"								
	72	6	2'- 8"	1AB602.2	S10		0'- 7"	2'- 1"	0'- 0"								
	4	7	6'- 11"	1AB702.2	S10		0'- 11"	6'- 0"	0'- 0"								
✳	5	7	5'- 10"	1AB703.2	1	0'- 9"	5'- 1"					0'- 0"		0'- 6"			
Abutment 2																	
	23	5	2'- 1"	2AB501.2	STR												
	6	5	20'- 9"	2AB502.2	STR												
	6	5	2'- 10"	2AB503.2	STR												
	16	5	3'- 3"	2AB504.2	STR												
	12	5	2'- 3"	2AB505.2	STR												
	2	5	3'- 6"	2AB506.2	STR												
	4	5	3'- 6"	2AB507.2	STR												
	7	6	4'- 4"	2AB601.2	STR												
	6	7	19'- 6"	2AB701.2	STR												
	6	4	5'- 0"	2AB401.2	S10		1'- 0"	3'- 0"	1'- 0"								
	8	5	9'- 6"	2AB508.2	T1	0'- 4"	3'- 0"	1'- 5"	3'- 0"	1'- 5"		0'- 4"					
	24	5	2'- 6"	2AB509.2	S10		0'- 10"	0'- 10"	0'- 10"								
	32	5	6'- 4"	2AB510.2	S10		2'- 9"	0'- 10"	2'- 9"								
	32	5	8'- 10"	2AB511.2	T1	0'- 4"	2'- 0"	1'- 5"	2'- 0"	1'- 5"		0'- 4"					
	2	5	4'- 1"	2AB512.2	S10		1'- 0"	2'- 1"	1'- 0"								
	24	5	3'- 11"	2AB513.2	21	0'- 0"	0'- 8"	3'- 3"						0'- 0"			
	4	5	6'- 0"	2AB514.2	S10		1'- 6"	3'- 0"	1'- 6"								
	4	5	6'- 8"	2AB515.2	S10		0'- 8"	6'- 0"	0'- 0"								
	72	6	2'- 8"	2AB602.2	S10		0'- 7"	2'- 1"	0'- 0"								
	4	7	6'- 11"	2AB702.2	S10		0'- 11"	6'- 0"	0'- 0"								
	4	7	5'- 10"	2AB703.2	1	0'- 9"	5'- 1"					0'- 0"		0'- 6"			

~ NOTES ~

1. UNLESS OTHERWISE DESIGNATED, ALL BAR REINFORCEMENT FOR CONCRETE IN SIZES UP TO AND INCLUDING NO. 18 SHALL CONFORM TO THE REQUIREMENTS OF THE "SPECIFICATIONS FOR DEFORMED BILLET-STEEL BARS FOR CONCRETE REINFORCEMENT", AASHTO M 31 (ASTM A 615-SI). ALL BARS SHALL BE GRADE 60, UNLESS OTHERWISE DESIGNATED.
2. FOR TYPICAL BENDING DETAILS, RECOMMENDED PIN DIAMETER "D" OF BENDS AND HOOKS, AND OTHER STANDARD PRACTICE, SEE CURRENT CONCRETE REINFORCING STEEL INSTITUTE "MANUAL OF STANDARD PRACTICE".
3. BARS WHICH REQUIRE MORE ACCURATE BENDING THAN STANDARD PRACTICES SHOULD HAVE LIMITS INDICATED.
4. ALL DIMENSIONS ARE OUT TO OUT OF BAR EXCEPT "A" AND "G" ON STANDARD 180 DEGREE AND 135 DEGREE HOOKS.
5. "J" DIMENSION ON 180 DEGREE HOOKS TO BE SHOWN ONLY WHERE NECESSARY TO RESTRICT HOOK SIZE. OTHERWISE, STANDARD HOOKS ARE TO BE USED.
6. "H" DIMENSION ON STIRRUPS TO BE SHOWN ONLY WHEN NECESSARY TO MAINTAIN CLEARANCES.
7. WHERE SLOPE DIFFERS FROM 45 DEGREES, DIMENSIONS "H" AND "K" MUST BE SHOWN.
8. ▲ DENOTES BARS TO BE CUT IN FIELD.
9. ✳ DENOTES ONE EXTRA BAR ADDED FOR TESTING PURPOSES.
10. △ DENOTES TWO EXTRA BARS ADDED FOR TESTING PURPOSES.
11. E IN BAR MARK PREFIX DENOTES EPOXY COATED REINFORCING STEEL.

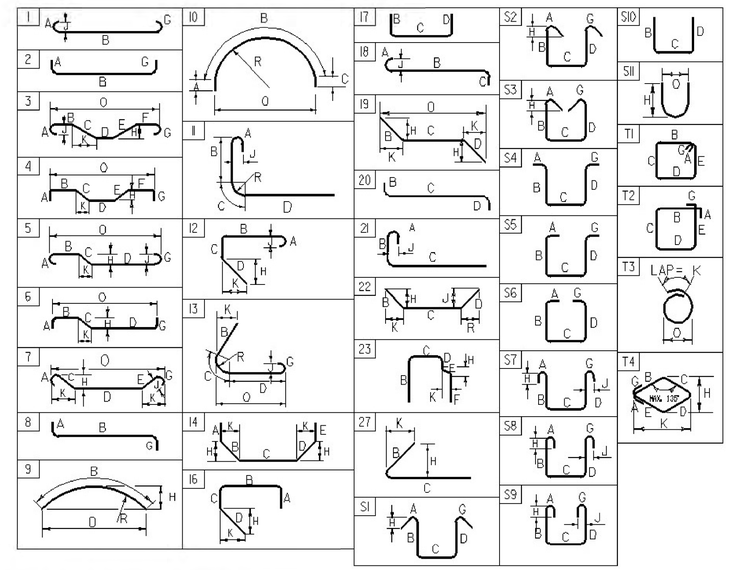

ASTM STANDARD REINFORCING BARS

BAR SIZE DESIGNATION	WEIGHT POUNDS PER FOOT	NOMINAL DIMENSIONS ROUND SECTION		
		DIAMETER INCHES	AREA INCHES 2	PERIMETER INCHES
#3	0.376	0.375	0.11	1.178
#4	0.668	0.500	0.20	1.571
#5	1.043	0.625	0.31	1.963
#6	1.502	0.750	0.44	2.356
#7	2.044	0.875	0.60	2.749
#8	2.670	1.000	0.79	3.142
#9	3.400	1.128	1.00	3.544
#10	4.303	1.270	1.27	3.990
#11	5.313	1.410	1.56	4.430
#14	7.65	1.693	2.25	5.32
#18	13.60	2.257	4.00	7.09

PROJECT NAME: **Calais**
PROJECT NUMBER: **BHF 037-2(10)**

FILE NAME: **Rebar Schedule**
PROJECT MANAGER: **G.K.DONINGTON**
DESIGNED BY: **S.BROWN**
REINFORCING STEEL SCHEDULE

PLOT DATE: **7/31/2015**
DRAWN BY: **S.BROWN**
CHECKED BY: **A. STOCKIN**
SHEET **37** OF **53**

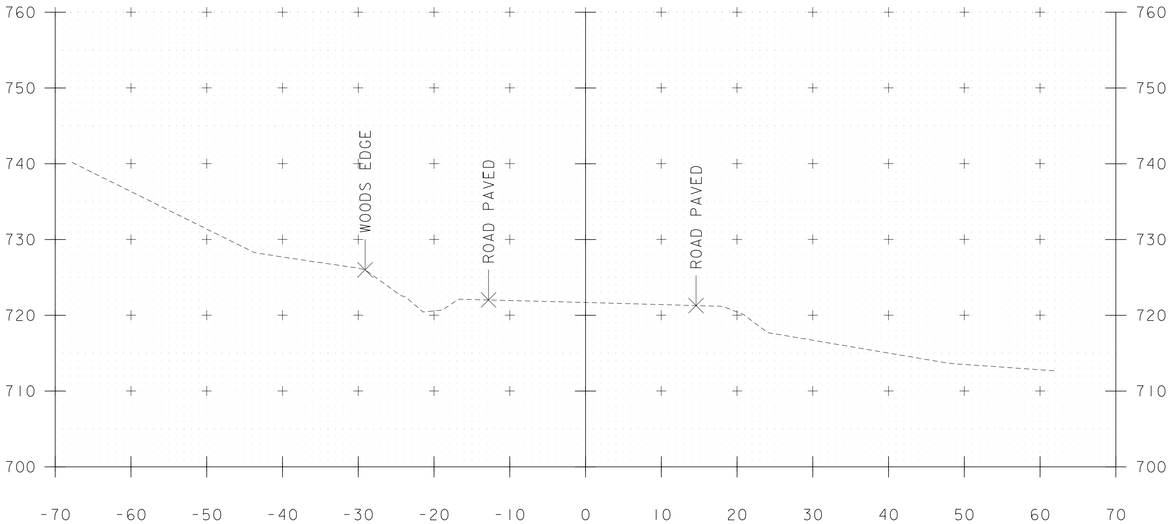

112+00

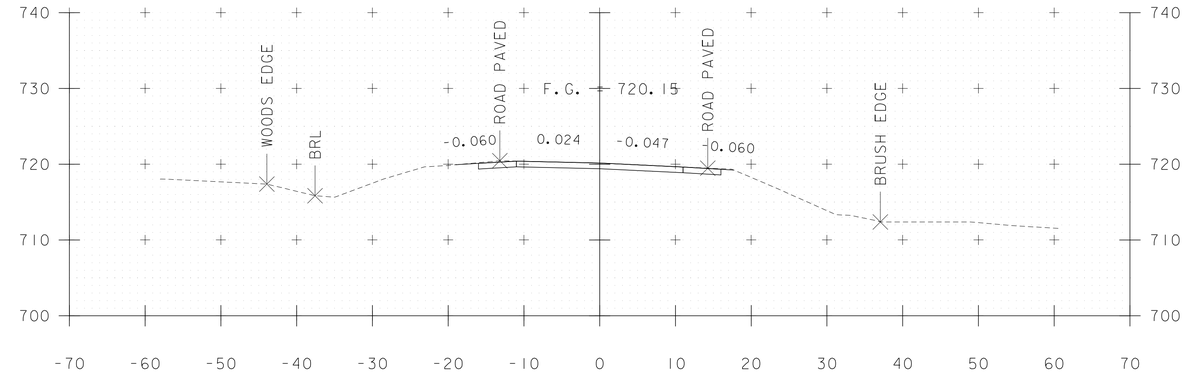

STA 112+75
BEGIN APPROACH
MATCH EXISTING CROSS-SLOPES

112+75

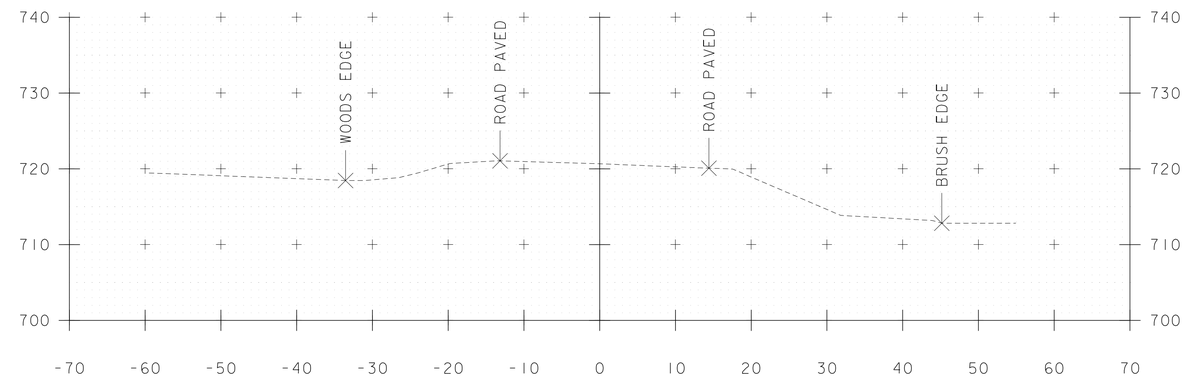

112+50

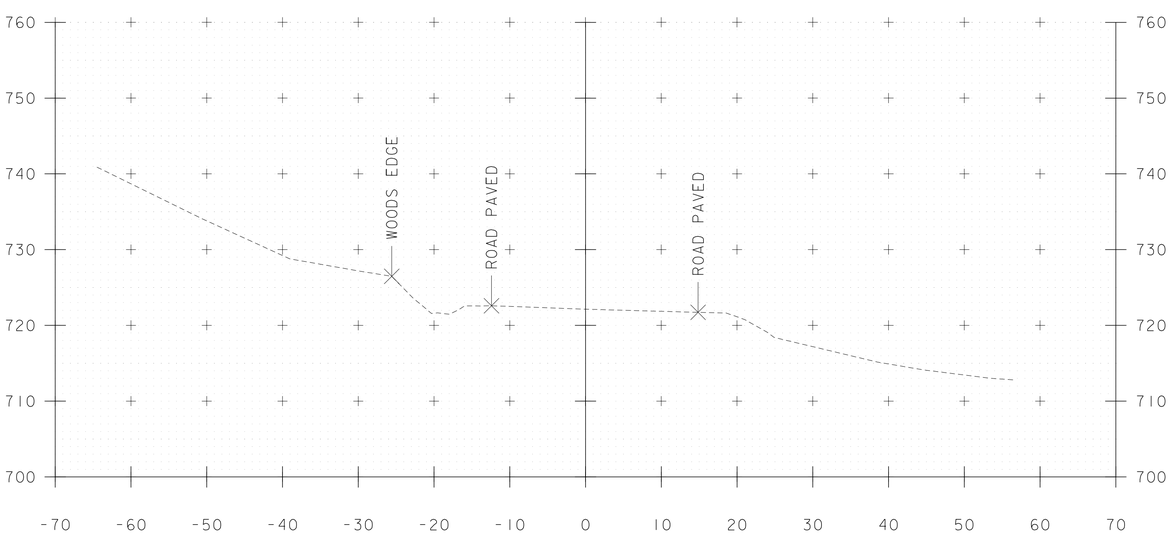

111+78

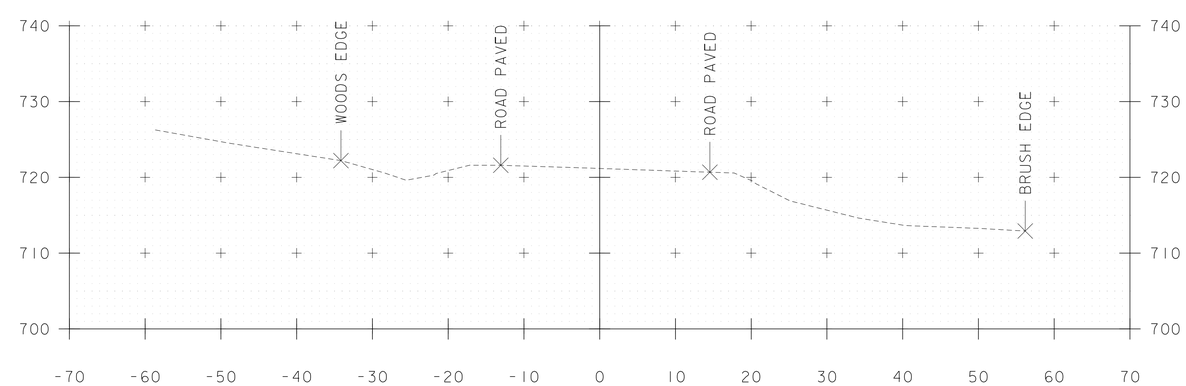

112+25

STA. 111+78 TO STA. 112+75

PARSONS BRINCKERHOFF
650 ELM STREET
MANCHESTER, NH 03101

PROJECT NAME: CALAIS
PROJECT NUMBER: BHF 037-2(10)

FILE NAME: z12b144xs.dgn
PROJECT LEADER: G.K.DONINGTON
DESIGNED BY: J.KHERA
MAINLINE CROSS SECTIONS

PLOT DATE: 31-JULY-2015
DRAWN BY: J.KHERA
CHECKED BY: R.BENJAMIN
SHEET 38 OF 53

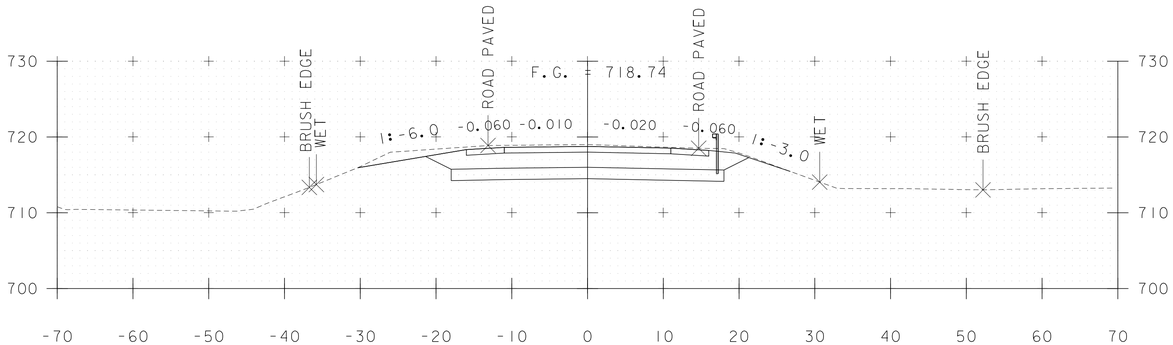

113+50

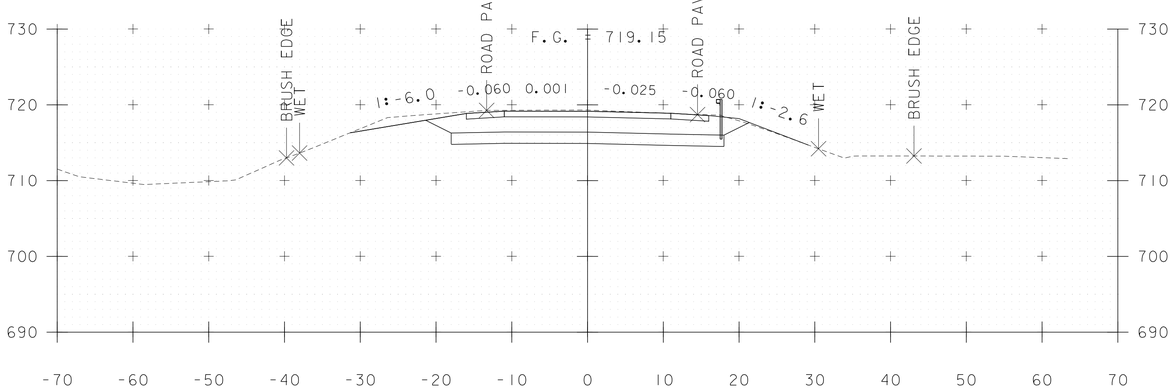

STA 113+25
END APPROACH
BEGIN PROJECT
BHF 037-2 (10)

113+25

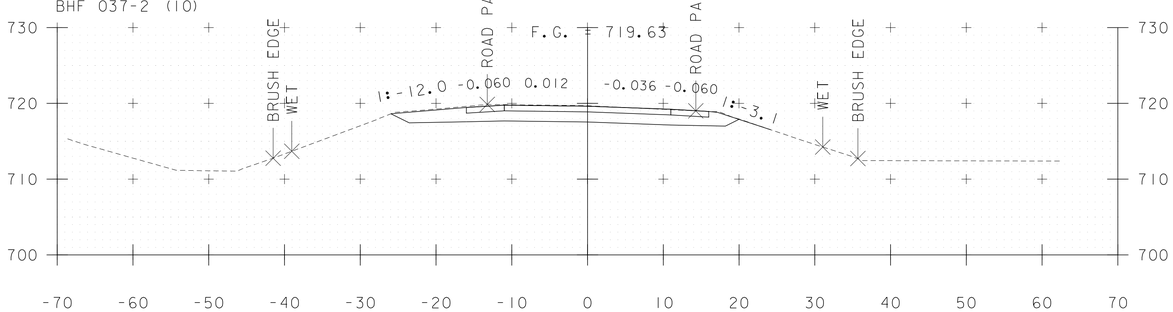

113+00

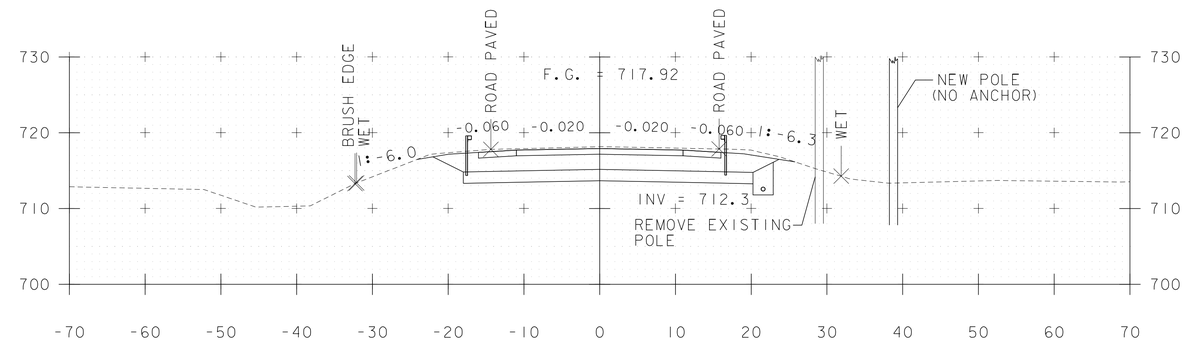

114+25

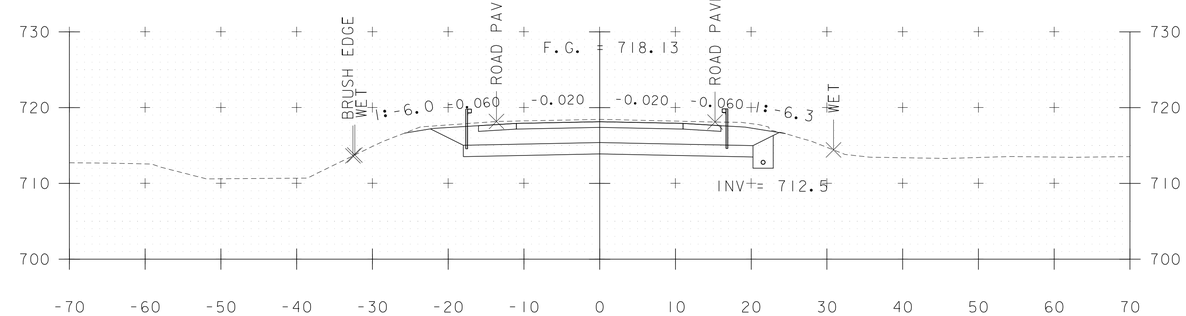

114+00

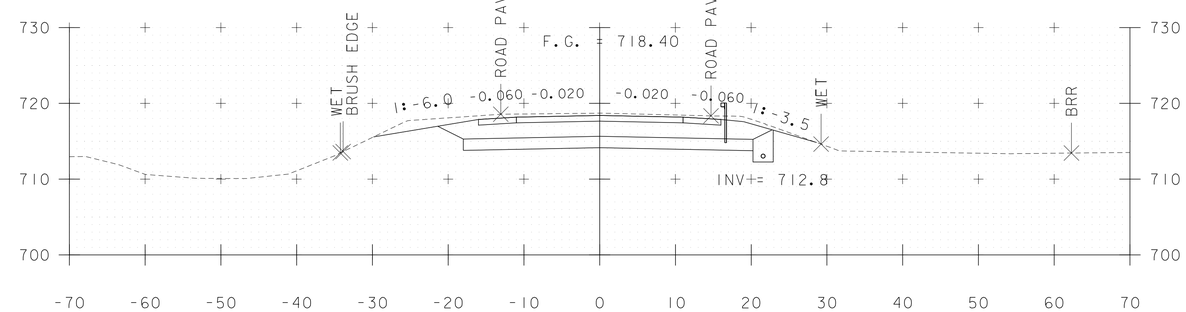

113+75

STA. 113+00 TO STA. 114+25

PARSONS BRINCKERHOFF
650 ELM STREET
MANCHESTER, NH 03101

PROJECT NAME: CALAIS	
PROJECT NUMBER: BHF 037-2(10)	
FILE NAME: z12b144xs.dgn	PLOT DATE: 31-JULY-2015
PROJECT LEADER: G.K.DONINGTON	DRAWN BY: J.KHERA
DESIGNED BY: J.KHERA	CHECKED BY: R.BENJAMIN
MAINLINE CROSS SECTIONS	SHEET 39 OF 53

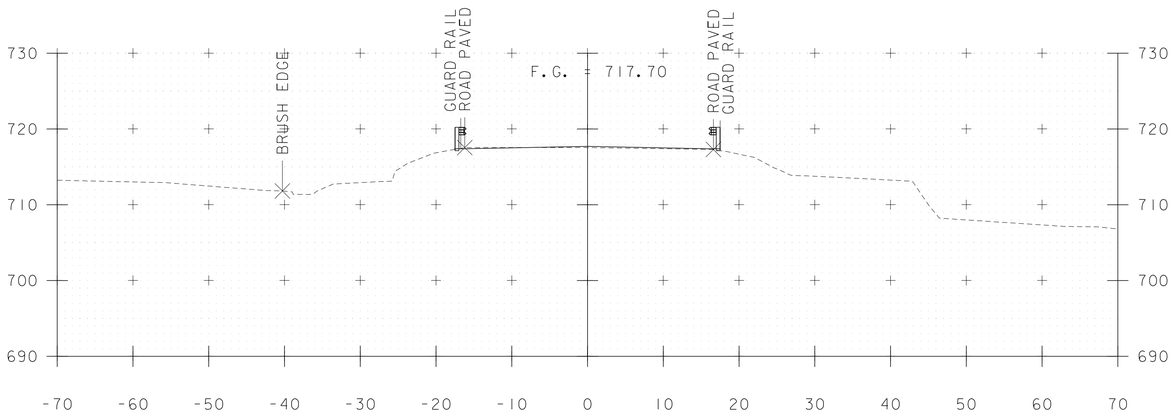

STA 114+91.79
STOP ROADWAY
BEGIN BRIDGE

115+00

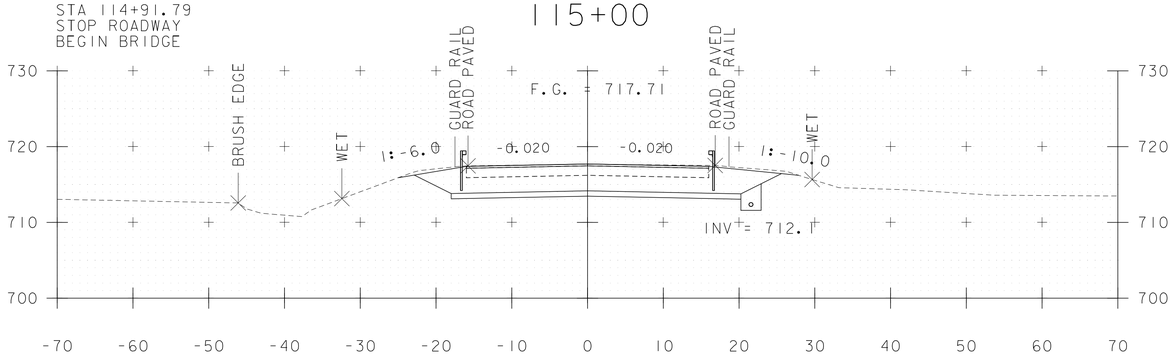

114+75

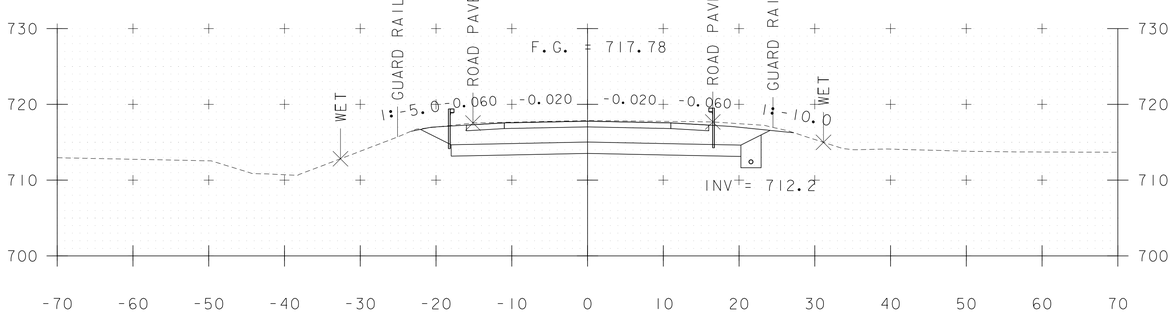

114+50

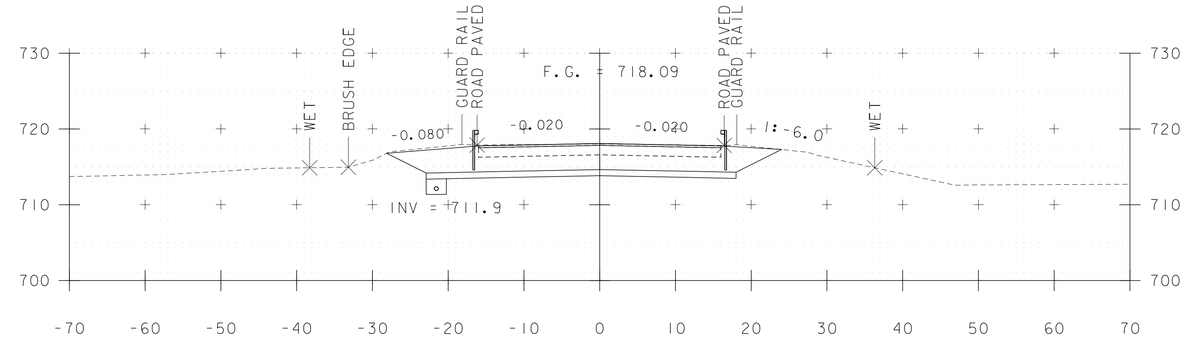

115+75

STA 115+55.63
END BRIDGE
BEGIN ROADWAY

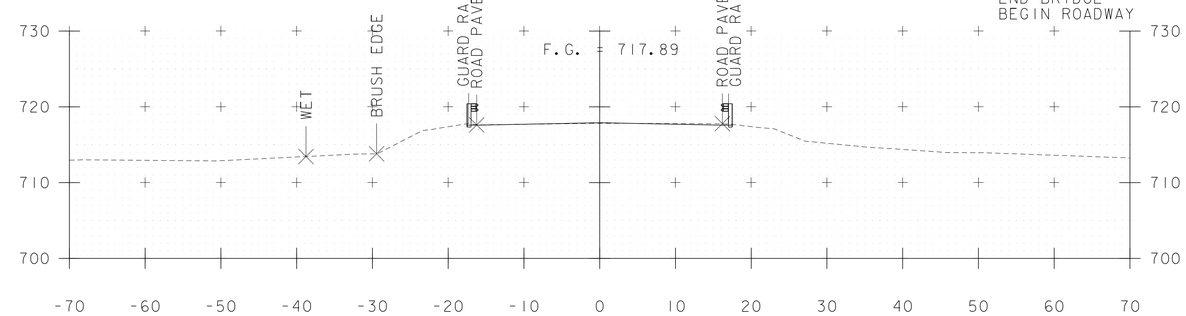

115+50

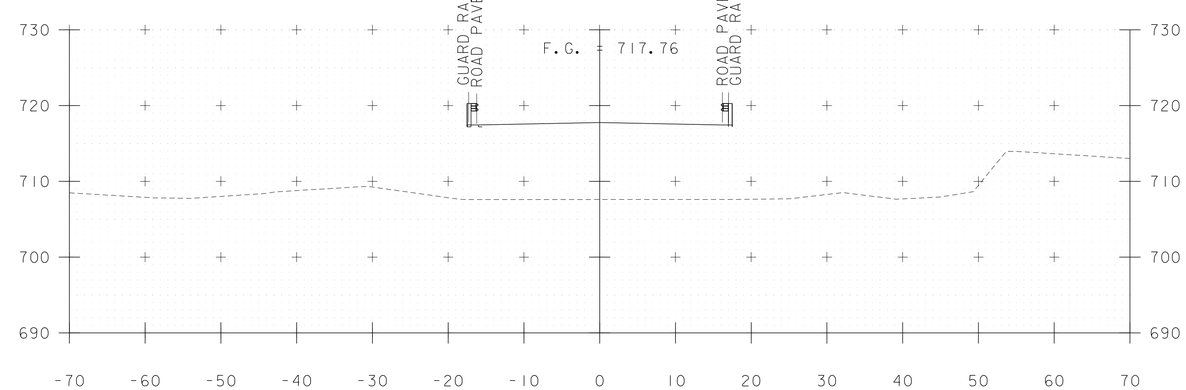

115+25

STA. 114+50 TO STA. 115+75

PARSONS BRINCKERHOFF
650 ELM STREET
MANCHESTER, NH 03101

PROJECT NAME: CALAIS
PROJECT NUMBER: BHF 037-2(10)

FILE NAME: zl2bl44xs.dgn
PROJECT LEADER: G.K.DONINGTON
DESIGNED BY: J.KHERA
MAINLINE CROSS SECTIONS

PLOT DATE: 31-JULY-2015
DRAWN BY: J.KHERA
CHECKED BY: R.BENJAMIN
SHEET 40 OF 53

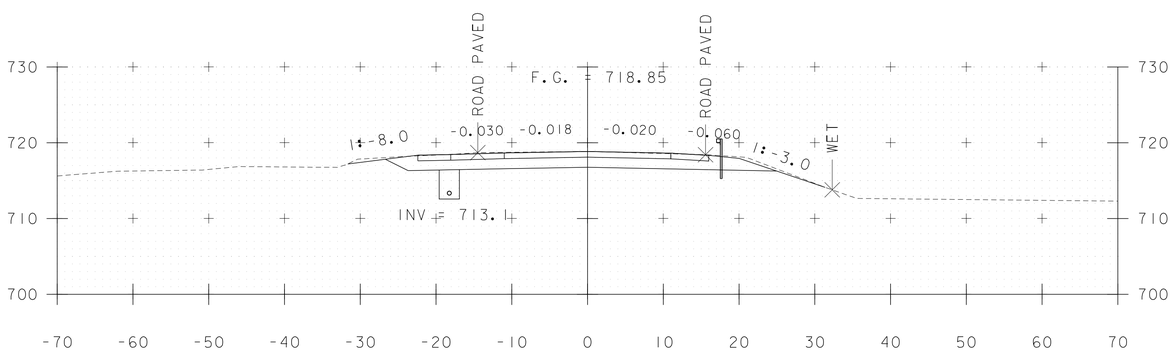

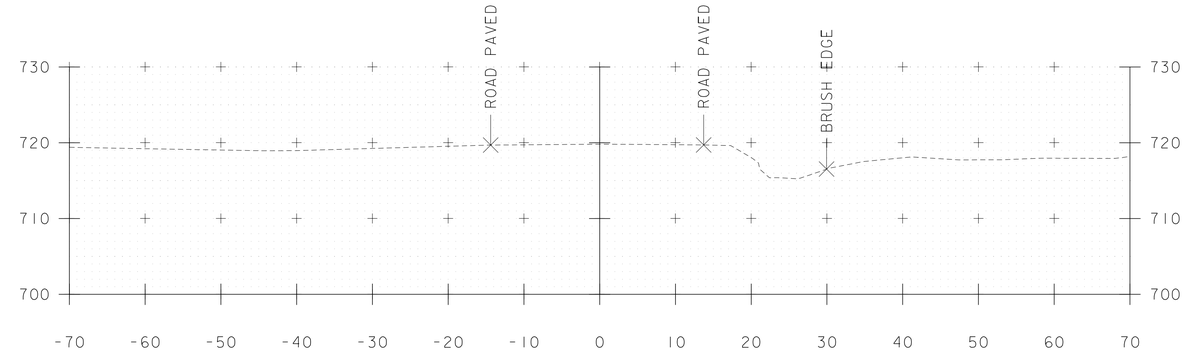

116+50

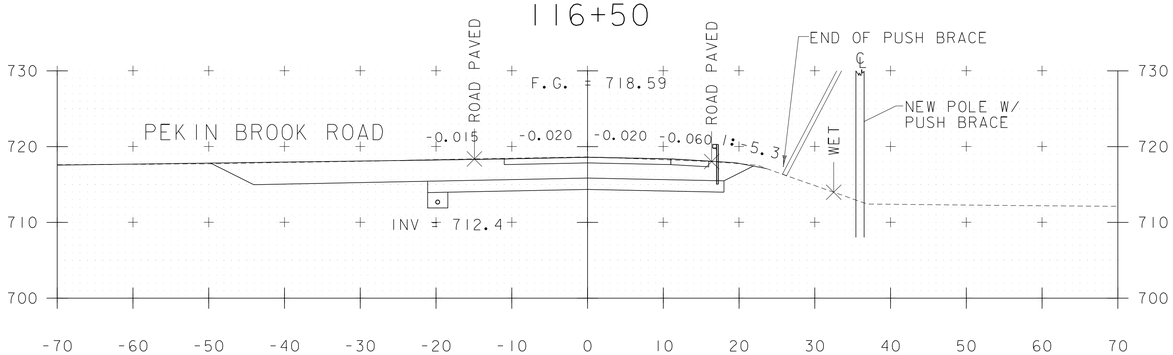

117+25

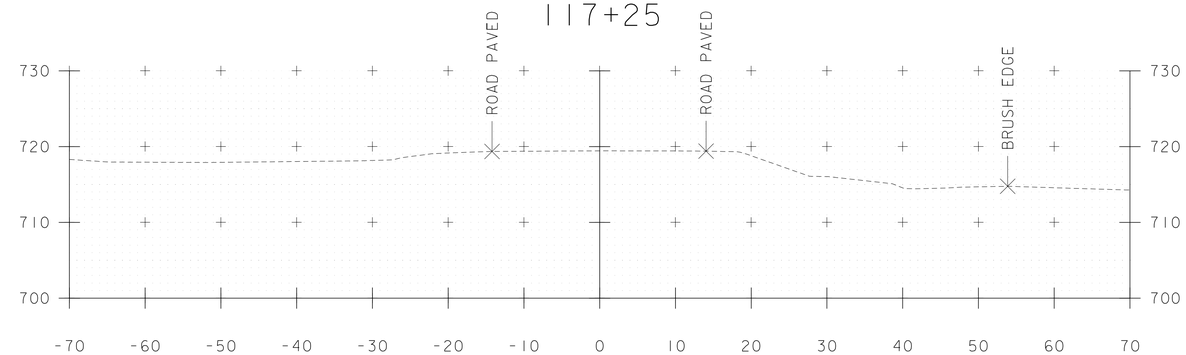

STA 116+25
END PROJECT
BEGIN APPROACH

116+25

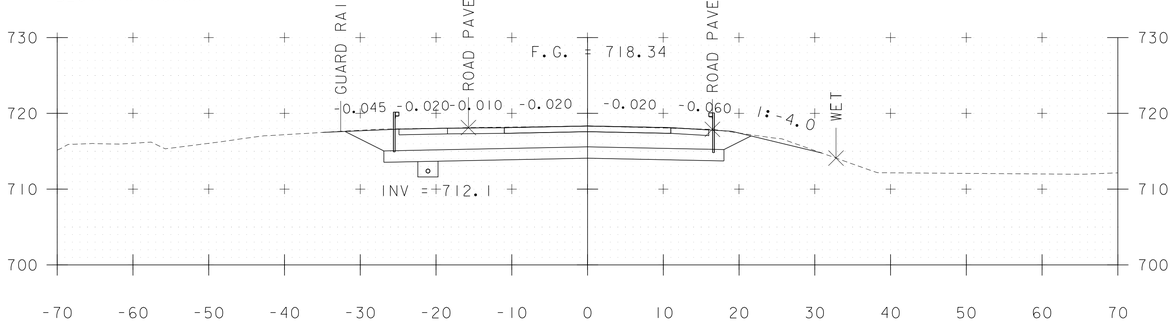

117+00

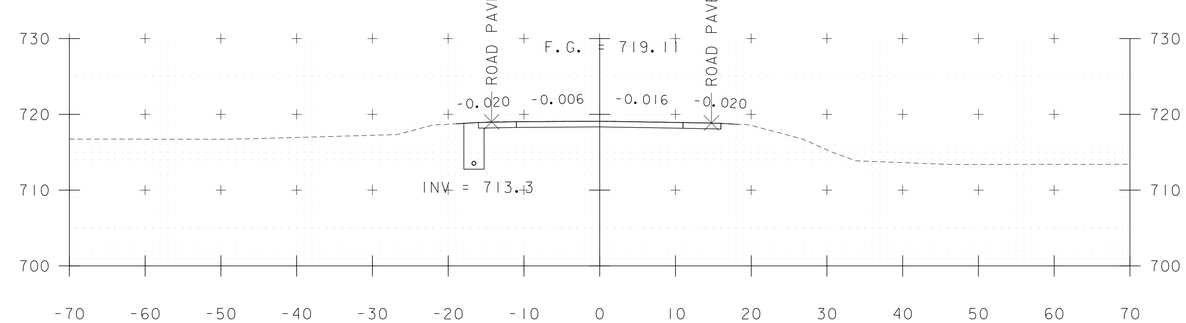

116+00

STA 116+75
END APPROACH

116+75

STA. 116+00 TO STA. 117+25

PARSONS BRINCKERHOFF
650 ELM STREET
MANCHESTER, NH 03101

PROJECT NAME: CALAIS	
PROJECT NUMBER: BHF 037-2(10)	
FILE NAME: z12b144xs.dgn	PLOT DATE: 31-JULY-2015
PROJECT LEADER: G.K.DONINGTON	DRAWN BY: J.KHERA
DESIGNED BY: J.KHERA	CHECKED BY: R.BENJAMIN
MAINLINE CROSS SECTIONS	SHEET 41 OF 53

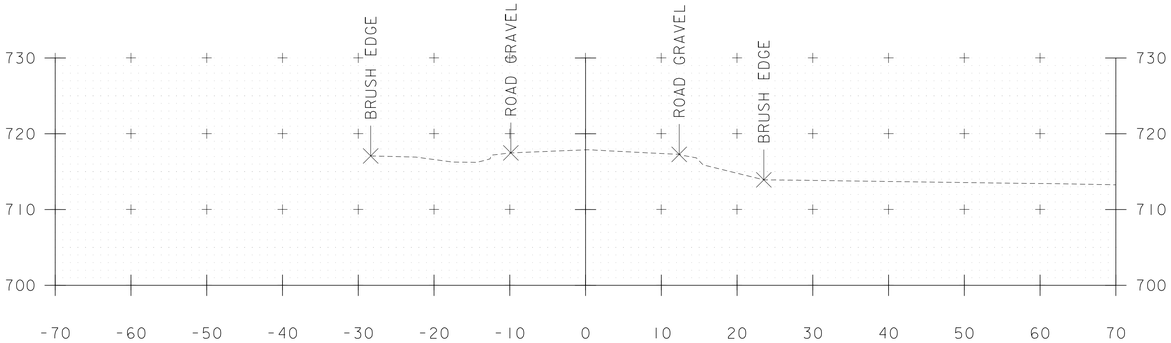

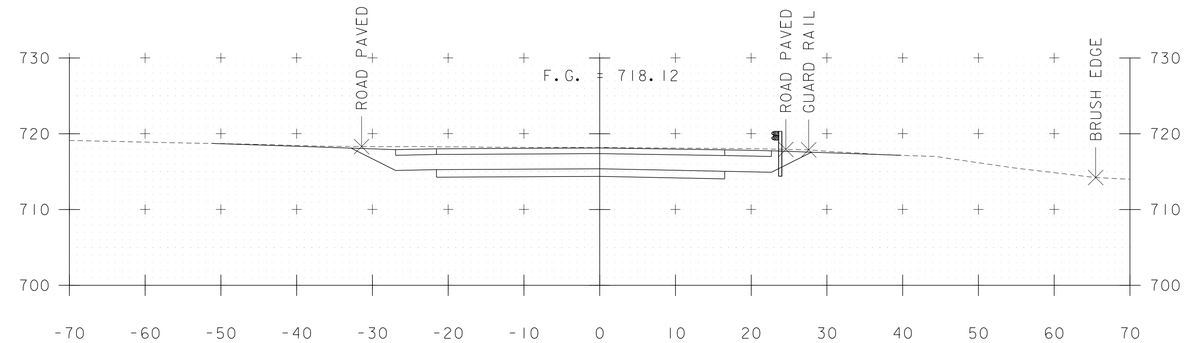

60+50

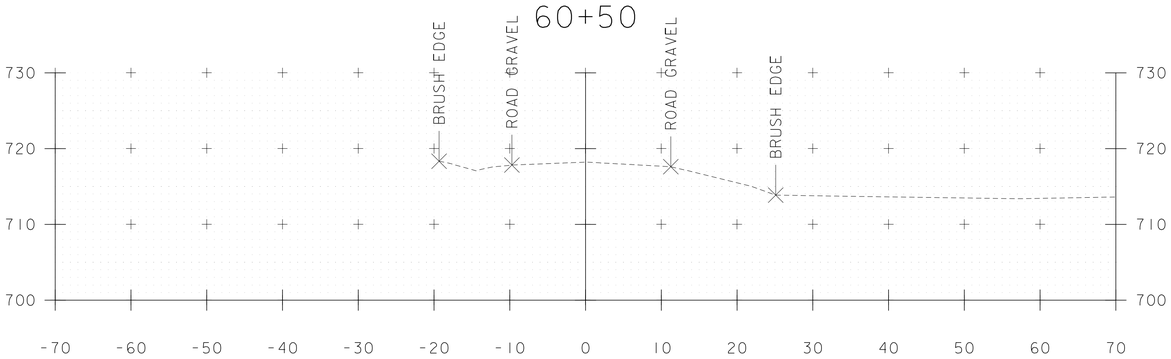

61+25

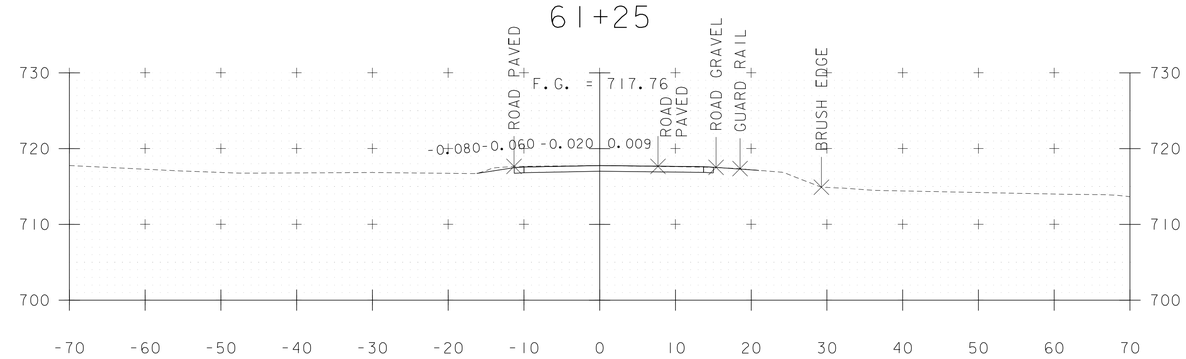

60+25

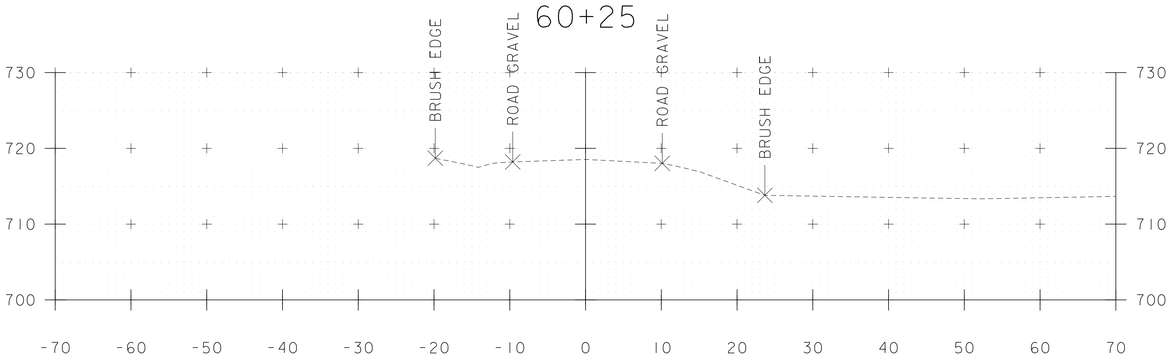

61+00

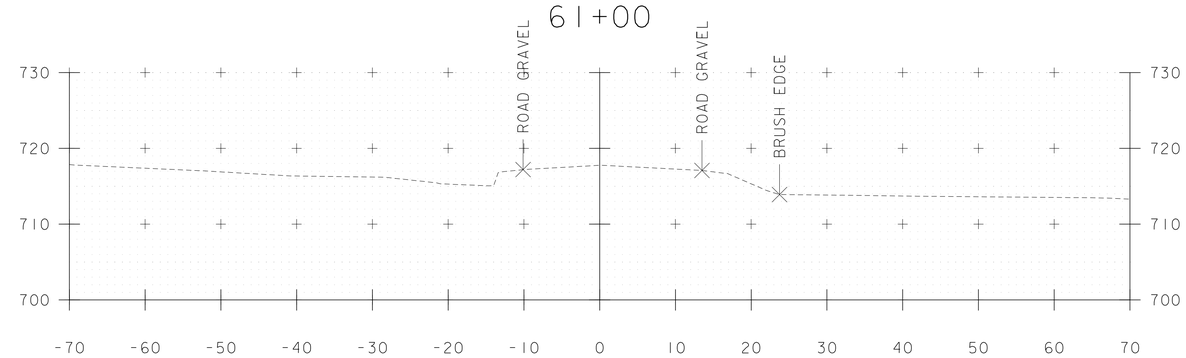

60+00

60+75

STA. 60+00 TO STA. 61+25

PARSONS BRINCKERHOFF
650 ELM STREET
MANCHESTER, NH 03101

PROJECT NAME: CALAIS	
PROJECT NUMBER: BHF 037-2(10)	
FILE NAME: z12b144xs.dgn	PLOT DATE: 31-JULY-2015
PROJECT LEADER: G.K.DONINGTON	DRAWN BY: J.KHERA
DESIGNED BY: J.KHERA	CHECKED BY: R.BENJAMIN
PEKIN ROAD CROSS SECTIONS	SHEET 42 OF 53

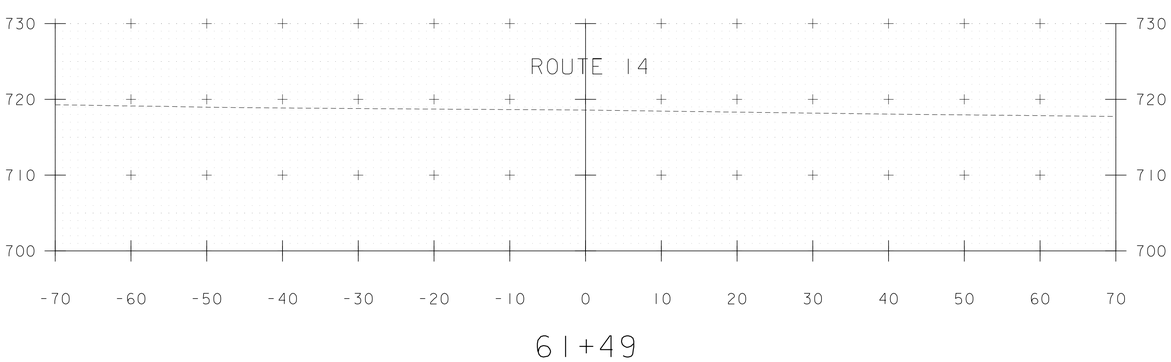

STA. 61+49 TO STA. 61+49

PARSONS BRINCKERHOFF
650 ELM STREET
MANCHESTER, NH 03101

PROJECT NAME: CALAIS
PROJECT NUMBER: BHF 037-2(10)

FILE NAME: z12b144xs.dgn
PROJECT LEADER: G.K.DONINGTON
DESIGNED BY: J.KHERA
PEKIN ROAD CROSS SECTIONS

PLOT DATE: 31-JULY-2015
DRAWN BY: J.KHERA
CHECKED BY: R.BENJAMIN
SHEET 43 OF 53

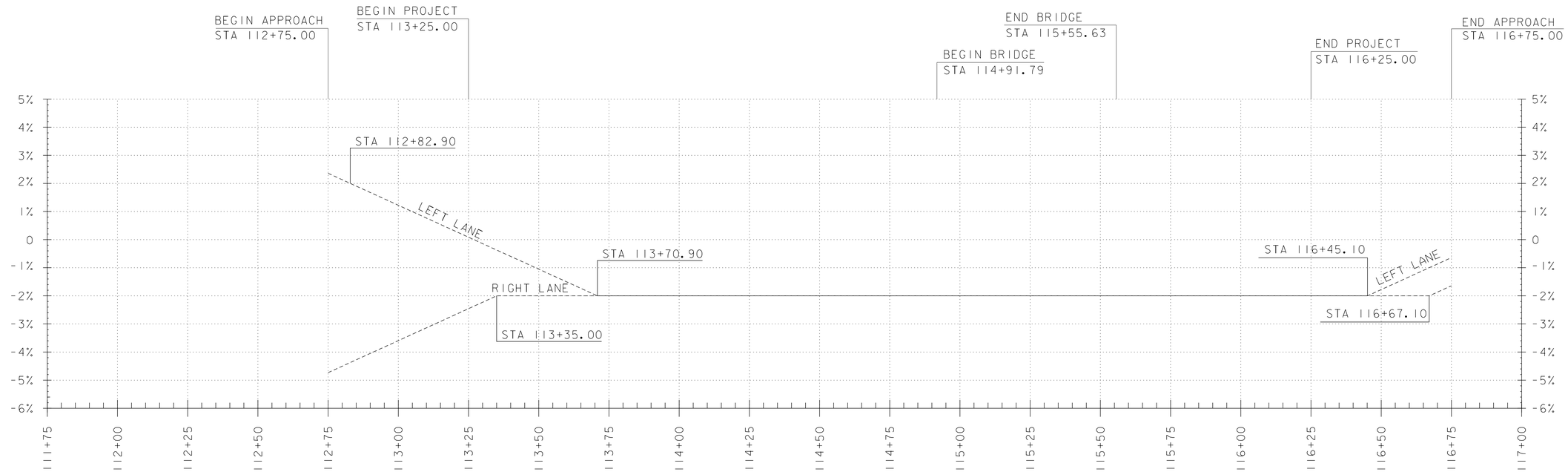

BANKING DIAGRAM

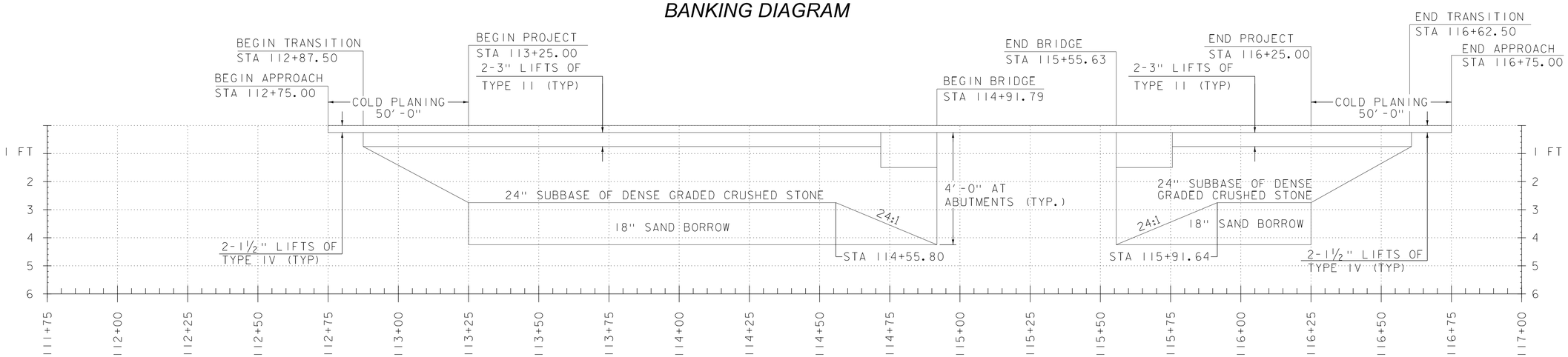

MATERIAL TRANSITIONS

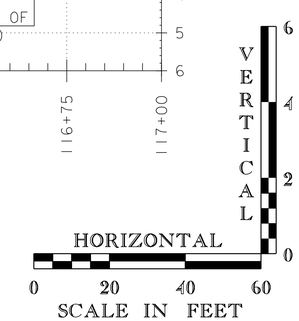

PROJECT NAME: CALAIS	
PROJECT NUMBER: BHF 037-2(10)	
PARSONS BRINCKERHOFF 650 ELM STREET MANCHESTER, NH 03101	FILE NAME: z12b144xs2.dgn PROJECT LEADER: G.K.DONINGTON DESIGNED BY: J.KHERA BANKING DIAGRAM AND MATERIAL TRANSITION
	PLOT DATE: 31-JULY-2015 DRAWN BY: J.KHERA CHECKED BY: R.BENJAMIN SHEET 44 OF 53

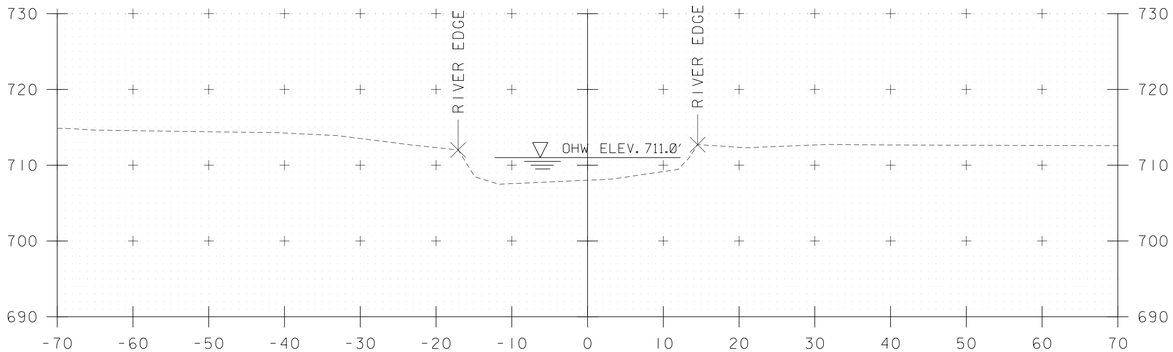

50+50

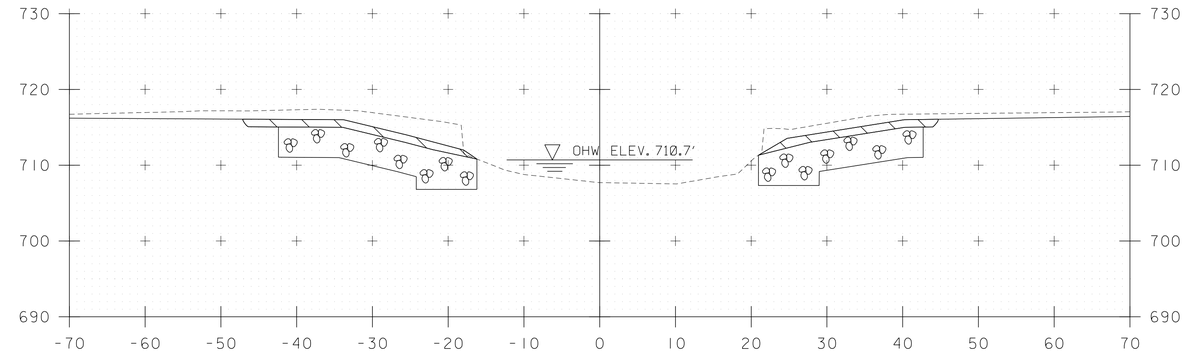

51+25

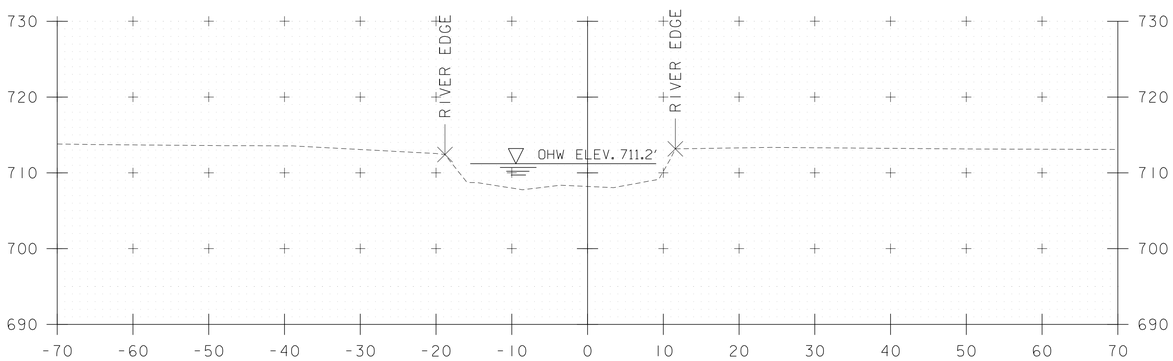

50+25

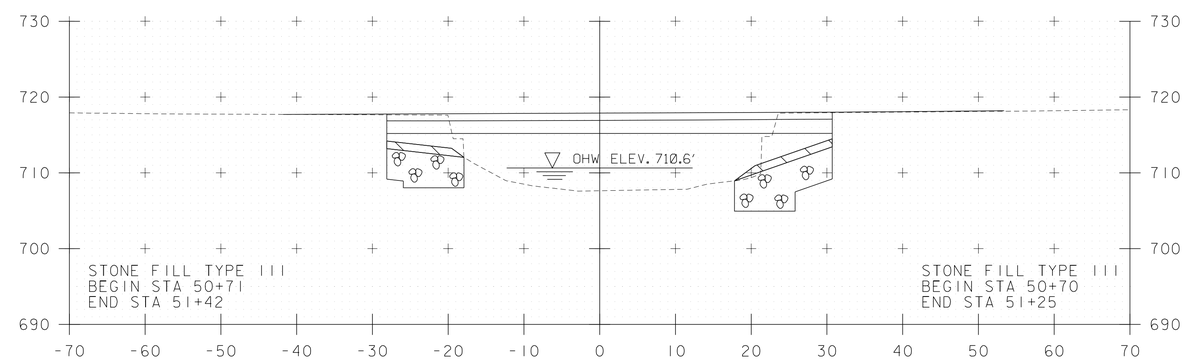

51+00

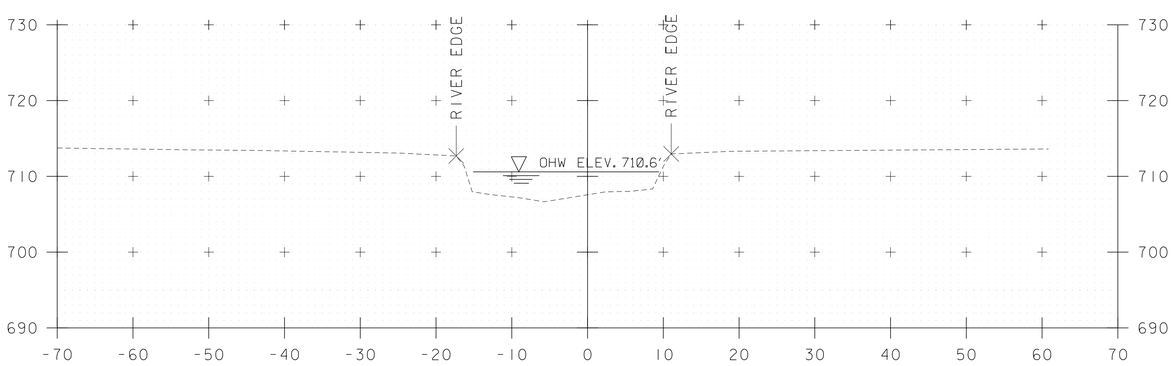

50+00

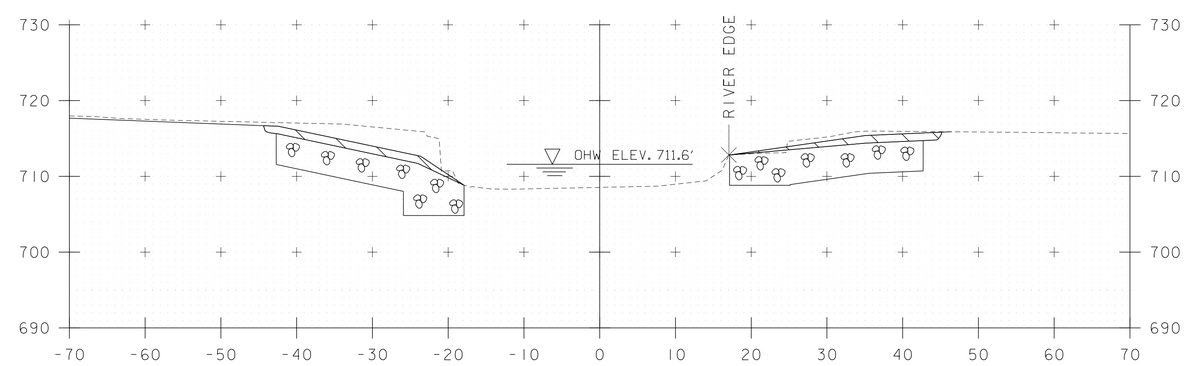

50+75

STA. 50+00 TO STA. 51+25

PARSONS BRINCKERHOFF
650 ELM STREET
MANCHESTER, NH 03101

PROJECT NAME: CALAIS	
PROJECT NUMBER: BHF 037-2(10)	
FILE NAME: z12b144xs.dgn	PLOT DATE: 31-JULY-2015
PROJECT LEADER: G.K.DONINGTON	DRAWN BY: J.KHERA
DESIGNED BY: J.KHERA	CHECKED BY: R.BENJAMIN
CHANNEL CROSS SECTIONS	SHEET 45 OF 53

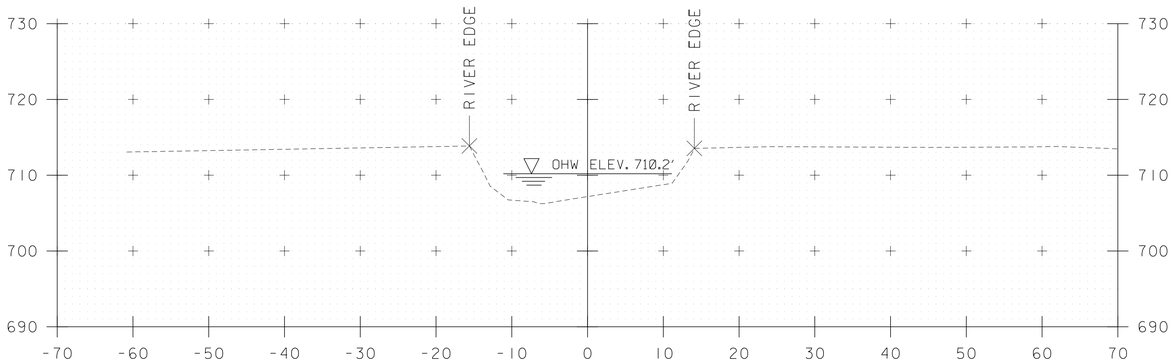

52+00

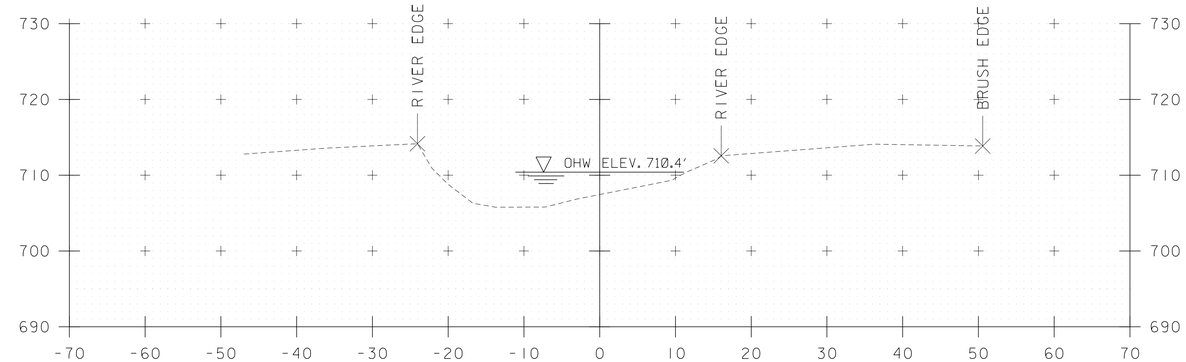

52+75

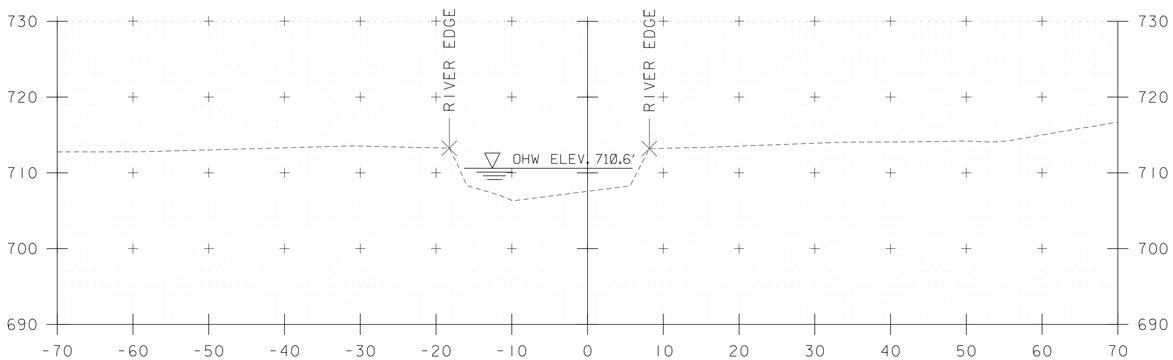

51+75

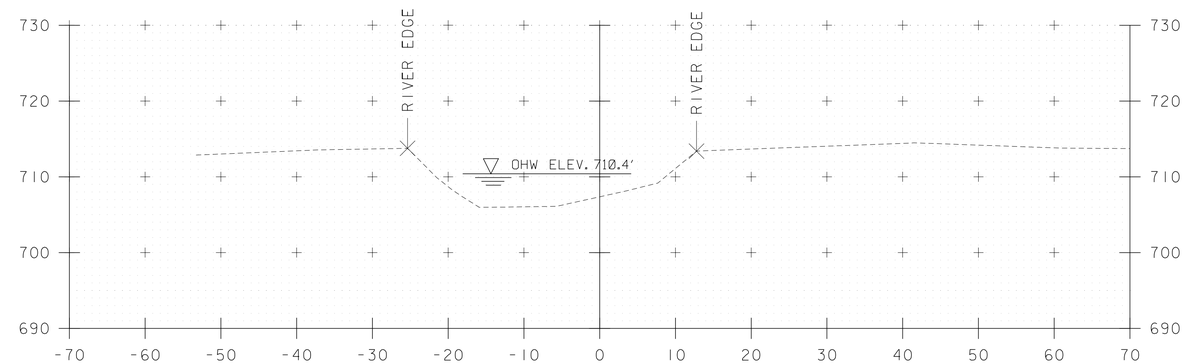

52+50

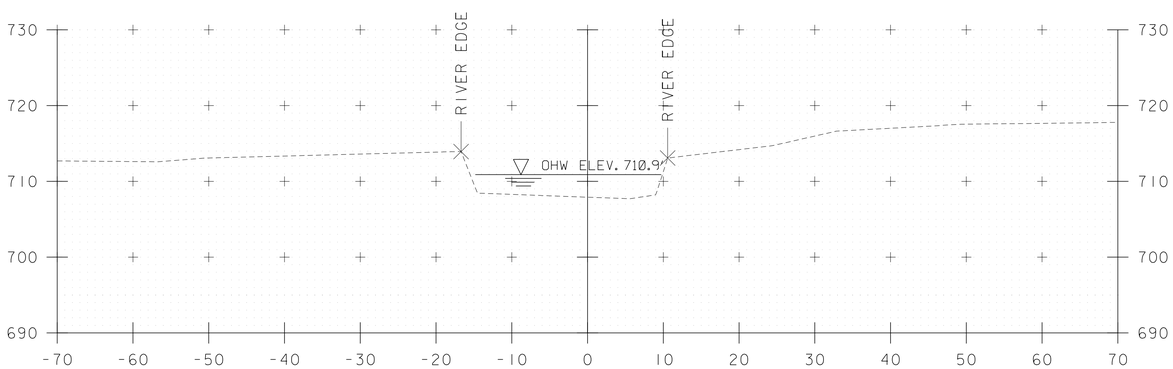

51+50

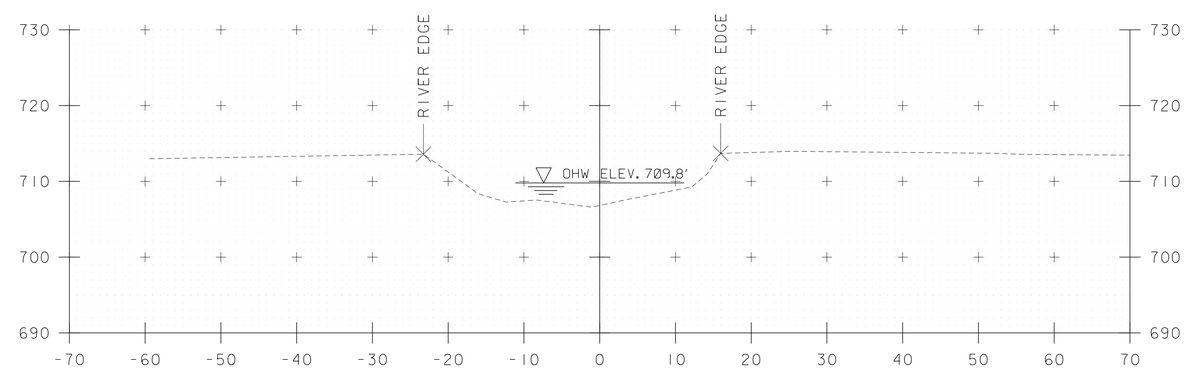

52+25

STA. 51+50 TO STA. 52+75

PARSONS BRINCKERHOFF
650 ELM STREET
MANCHESTER, NH 03101

PROJECT NAME: CALAIS
PROJECT NUMBER: BHF 037-2(10)

FILE NAME: z12b144xs.dgn
PROJECT LEADER: G.K.DONINGTON
DESIGNED BY: J.KHERA
CHANNEL CROSS SECTIONS

PLOT DATE: 31-JULY-2015
DRAWN BY: J.KHERA
CHECKED BY: R.BENJAMIN
SHEET 46 OF 53

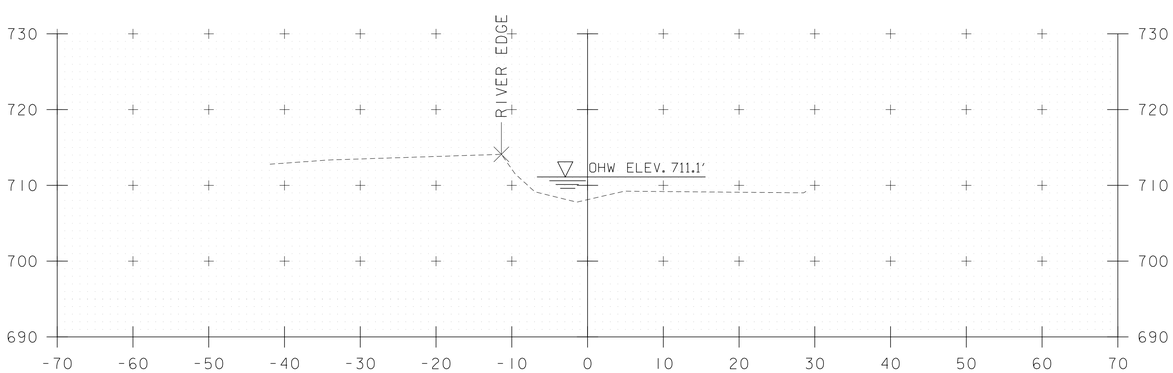

52+98

STA. 52+98 TO STA. 52+98

PARSONS BRINCKERHOFF
650 ELM STREET
MANCHESTER, NH 03101

PROJECT NAME: CALAIS
PROJECT NUMBER: BHF 037-2(10)

FILE NAME: z12b144xs.dgn
PROJECT LEADER: G.K.DONINGTON
DESIGNED BY: J.KHERA
CHANNEL CROSS SECTIONS

PLOT DATE: 31-JULY-2015
DRAWN BY: J.KHERA
CHECKED BY: R.BENJAMIN
SHEET 47 OF 53

EPSC PLAN NARRATIVE

1.1 PROJECT DESCRIPTION

THIS PROJECT INVOLVES THE REMOVAL OF A 44' - 1 SPAN BRIDGE. THE BRIDGE WILL BE REPLACED WITH A 62.5' SINGLE SPAN PRESTRESSED CONCRETE NEXT D BEAM BRIDGE OVER PEKIN BROOK, ON NEW INTEGRAL ABUTMENTS ALONG A SIMILAR ALIGNMENT. THE BRIDGE IS LOCATED IN THE TOWN OF CALAIS, ON VT ROUTE 14.

NOTE: AREA OF DISTURBANCE INCLUDES LIMITS OF EARTH DISTURBANCE WITHIN THE PROJECT AREA, AS WELL AS WASTE, BORROW AND STAGING AREAS, AND OTHER EARTH DISTURBING ACTIVITIES WITHIN OR DIRECTLY ADJACENT TO THE PROJECT LIMITS AS SHOWN ON THE ATTACHED EPSC PLAN.

TOTAL AREA OF DISTURBANCE AS SHOWN ON THE ATTACHED EPSC PLAN IS APPROXIMATELY 0.57 ACRES.

IT IS ANTICIPATED THAT THIS PROJECT WILL LAST ONE CONSTRUCTION SEASON.

1.2 SITE INVENTORY

1.2.1 TOPOGRAPHY

THE TOPOGRAPHY OF THE AREA IS MOSTLY WELL ESTABLISHED FOREST WITH OCCASIONAL OPEN AREAS. VT ROUTE 14, AND PEKIN BROOK ROAD (TH 3) ARE WITHIN THE PROJECT SITE. THERE IS A RESIDENTIAL DWELLING APPROXIMATELY 250' NORTH OF THE STRUCTURE, AS WELL AS OTHER RESIDENCES WITHIN A GENERAL PROXIMITY ALONG VT ROUTE 14.

1.2.2 DRAINAGE, WATERWAYS, BODIES OF WATER, AND PROXIMITY TO NATURAL OR MAN-MADE WATER FEATURES

PEKIN BROOK IS THE ONLY OPEN WATER SOURCE ON THIS PROJECT. THE BROOK IS CLASSIFIED AS A GRADUAL, INCISED CHANNEL WITH STEEP BANKS, AND A STREAM BED CONSISTING MOSTLY OF SILT. PEKIN BROOK ROAD AND VT ROUTE 14 HAVE CROSS PIPES WHICH ARE OUTSIDE THE PROJECT LIMITS, AND THE RESIDENTIAL DWELLING HAS A DRIVEWAY CULVERT.

1.2.3 VEGETATION

THE VEGETATION IN THE PROJECT AREA CONSISTS OF HARDWOOD TREES AND UNDERGROWTH. THE IMPACT TO VEGETATION WILL BE LIMITED TO THAT WHICH IS DIRECTLY AFFECTED BY REPLACEMENT OF THE EXISTING BRIDGE. UPON PROJECT COMPLETION, THE CHANNEL WILL BE ARMORED WITH STONE FILL TYPE IV AS SPECIFIED ON THE PLANS.DISTURBED VEGETATION WILL BE REESTABLISHED WITH STANDARD SEED AND MULCH PRACTICES.

1.2.4 SOILS

ALL SOIL DATA CAME FROM THE AGENCY OF NATURAL RESOURCES:

Sa – SALMON, VERY FINE SANDY LOAM, SLOPES 25 TO 50%, "K FACTOR"= 0.49, HIGHLY ERODIBLE.

Su – SUNNY, SILT LOAM, SLOPES 0 TO 2%, NOT WELL DRAINED, "K FACTOR"= 0.32, NOT HIGHLY ERODIBLE.

NcA – NICHOLVILLE, SILT LOAM, SLOPES 3 TO 8%, "K FACTOR"= 0.49, POTENTIALLY HIGHLY ERODIBLE.

NOTE: K-VALUES GENERALLY INDICATE THE FOLLOWING:
0.0-0.23 = LOW EROSION POTENTIAL
0.24-0.36 = MODERATE EROSION POTENTIAL
0.37 AND HIGHER = HIGH EROSION POTENTIAL

1.2.5 SENSITIVE RESOURCE AREAS

CRITICAL HABITATS: NO
HISTORICAL OR ARCHEOLOGICAL AREAS: NO
PRIME AGRICULTURAL LAND: NO
THREATENED AND ENDANGERED SPECIES: NO
WATER RESOURCE: PEKIN BROOK

1.3 RISK EVALUATION

THIS PROJECT DOES NOT FALL UNDER THE JURISDICTION OF GENERAL PERMIT 3-9020 FOR STORMWATER RUNOFF FROM CONSTRUCTION SITES. SHOULD CHANGES PRIOR TO OR DURING CONSTRUCTION RESULT IN ONE OR MORE ACRES OF EARTH DISTURBANCE OR SHOULD THE PROJECT BECOME PART OF A LARGER PLAN OF DEVELOPMENT, THE CONTRACTOR WILL BE RESPONSIBLE FOR ANY ADDITIONAL PERMITTING.

1.4 EROSION PREVENTION AND SEDIMENT CONTROL

THE EROSION CONTROL PLANS ARE MEANT AS A GUIDELINE FOR PREVENTING EROSION AND CONTROLLING SEDIMENT TRANSPORT. THE PRINCIPLES OUTLINED IN THIS NARRATIVE CONSIST OF APPLYING MEASURES THROUGHOUT CONSTRUCTION OF THE PROJECT IN ORDER TO MINIMIZE SEDIMENT TRANSPORT TO THE RECEIVING WATERS. THE MEASURES INCLUDE STABILIZATION AND STRUCTURAL PRACTICES, STORM WATER CONTROLS AND OTHER POLLUTION PREVENTION PRACTICES. THEY HAVE BEEN PROPOSED BY THE DESIGNER AS A BASIS FOR PROTECTING RESOURCES AND WILL NEED TO BE BUILT UPON BASED ON THE SPECIFC MEANS AND METHODS OF THE CONTRACTOR. REFER TO THE LOW RISK SITE HANDBOOK AND APPROPRIATE DETAIL SHEETS FOR SPECIFIC GUIDANCE AND CONSTRUCTION DETAILING.

ALL MEASURES SHALL BE REGULARLY MAINTAINED AND SHALL BE CHECKED FOR SEDIMENT BUILD-UP. SEDIMENT SHALL BE DISPOSED OF AT AN APPROVED SITE WHERE IT WILL NOT BE SUBJECT TO EROSION.

1.4.1 MARK SITE BOUNDARIES
SITE BOUNDARIES AND AREAS CONSTRUCTION EQUIPMENT CAN ACCESS SHALL BE DELINEATED.

PROJECT DEMARCATION FENCING (PDF) SHALL BE USED TO PHYSICALLY MARK SITE BOUNDARIES.

1.4.2 LIMIT DISTURBANCE AREA
PREVENTING INITIAL SOIL EROSION BY MINIMIZING THE EXPOSED AREA IS MUCH MORE EFFECTIVE THAN TREATING ERODED SEDIMENT. EARTH DISTURBANCE CAN BE MINIMIZED THROUGH CONSTRUCTION PHASING BY ONLY OPENING UP EARTH AS NECESSARY. THIS CAN LIMIT THE AREA THAT WILL BE DISTURBED AND EXPOSED TO EROSION. EMPLOY TEMPORARY CONSTRUCTION STABILIZATION PRACTICES IN INCREMENTAL STAGES AS PHASES CHANGE. FOR PROJECTS WHICH FALL UNDER THE CONSTRUCTION GENERAL PERMIT, ONLY THE ACREAGE LISTED ON THE PERMIT AUTHORIZATION MAY BE EXPOSED AT ANY GIVEN TIME.

MAINTAINING VEGETATED BUFFERS ALONG STREAM BANKS, WETLANDS OR OTHER SENSITIVE AREAS IS A CRUCIAL EROSION AND SEDIMENT CONTROL MEASURE THAT SHOULD BE ESTABLISHED WHEREVER POSSIBLE.

1.4.3 SITE ENTRANCE/EXIT STABILIZATION
TRACKING OF SEDIMENT ONTO PUBLIC HIGHWAYS SHALL BE MNIMIZED TO REDUCE THE POTENTIAL FOR RUNOFF ENTERING RECEIVING WATERS. INSTALLATION SHALL COINCIDE WITH THE CONTRACTORS PROGRESS SCHEDULE.

STABILIZED CONSTRUCTION ENTRANCES SHALL BE INSTALLED AS PROPOSED ON THE EPSC PLAN AND ANYWHERE EQUIPMENT WILL BE GOING FROM AREAS OF EXPOSED SOILS TO PAVED SURFACES.

1.4.4 INSTALL SEDIMENT BARRIERS
SEDIMENT BARRIERS SHALL BE UTILIZED TO INTERCEPT RUNOFF AND ALLOW SUSPENDED SEDIMENT TO SETTLE OUT. THEY SHALL BE INSTALLED PRIOR TO ANY UP SLOPE WORK.

SILT FENCE SHALL BE INSTALLED AS PROPOSED ON THE EPSC PLAN.

1.4.5 DIVERT UPLAND RUNOFF
DIVERSIONARY MEASURES SHALL BE USED TO INTERCEPT RUNOFF FROM ABOVE THE CONSTRUCTION AND DIRECT IT AROUND THE DISTURBED AREA SO THAT CLEAN WATER DOES NOT BECOME MUDDIED WHILE TRAVELING OVER EXPOSED SOILS ON THE CONSTRUCITON SITE.

THE PROJECT AREA IS RELATIVELY FLAT. THERFORE IT IS NOT ANTICPIATED THAT DIVERSION MEASURES WILL BE NECESSARY.

1.4.6 SLOW DOWN CHANNELIZED RUNOFF
CHECK STRUCTURES SHALL BE UTILIZED TO REDUCE THE VELOCITY, AND THUS THE EROSIVE POTENTIAL, OF CONCENTRATED FLOW IN CHANNELS.

1.4.7 CONSTRUCT PERMANENT CONTROLS
PERMANENT STORMWATER TREATMENT DEVICES SHALL BE INSTALLED AS SHOWN ON THE PLANS AND IN ACCORDANCE WITH PERMIT CONDITIONS.

1.4.8 STABILIZE EXPOSED SOILS DURING CONSTRUCTION
ALL AREAS OF DISTURBANCE MUST HAVE TEMPORARY STABILIZATION IN PLACE WITHIN 48 HOURS OF DISTURBANCE OR IN ACCORDANCE WITH THE CONSTRUCTION GENERAL PERMIT 3-9020 AUTHORIZATION.

SURFACE ROUGHENING OF ALL EXPOSED SLOPES, COMBINED WITH TEMPORARY MULCHING, SHALL BE UTILIZED ON A REGULAR BASIS. BIODEGRADABLE EROSION CONTROL MATTING OR AN EQUIVALENT SHALL BE USED TO STABILIZE ALL SLOPES STEEPER THAN 1:3.

THE FORECAST OF RAINFALL EVENTS SHALL TRIGGER IMMEDIATE PROTECTION OF EXPOSED SOILS.

1.4.9 WINTER STABILIZATION
VARIOUS MEASURES SPECIFIC TO WINTER MAY BE NECESSARY SHOULD THE PROJECT EXTEND INTO WINTER (OCTOBER 15 THROUGH APRIL 15). REFER TO THE LOW RISK SITE HANDBOOK FOR GUIDANCE.

1.4.10 STABILIZE SOIL AT FINAL GRADE
EXPOSED SOIL MUST BE STABILIZED WITHIN 48 HOURS OF REACHING FINAL GRADE.

SEED, MULCH, FERTILIZER AND LIME SHALL BE USED TO ESTABLISH PERMANENT VEGETATION. FOR SLOPES STEEPER THAN 1:3, BIODEGRADABLE EROSION CONTROL MATTING OR AN EQUIVALENT SHALL BE USED INSTEAD OF MULCH.

1.4.11 DE-WATERING ACTIVITIES
DISCHARGE FROM DEWATERING ACTIVITIES THAT FLOWS OFF OF THE CONSTRUCTION SITE MUST NOT CAUSE OR CONTRIBUTE TO A VIOLATION OF THE VERMONT WATER QUALITY STANDARDS.

DEWATERING IS NOT ANTICIPATED FOR THIS PROJECT. IF DEWATERING IS NECESSARY THE SPECIFIC MEANS FOR TREATMENT OF DISCHARGE SHALL BE PROVIDED BY THE CONTRACTOR.

1.4.12 INSPECT YOUR SITE
INSPECT THE PROJECT SITE BASED ON SPECIAL PROVISION REQUIREMENTS OR CONSTRUCTION GENERAL PERMIT AUTHORIZATION STIPULATIONS.

1.5 SEQUENCE AND STAGING

THIS SECTION WILL BE DEVELOPED BY THE CONTRACTOR USING THE GUIDANCE OUTLINED IN THE VTRANS EPSC PLAN CONTRACTOR CHECKLIST.

1.5.1 CONSTRUCTION SEQUENCE

1.5.2 OFF-SITE ACTIVITIES
IN ADDITION TO THE CONTRACTOR CHECKLIST ANY ACTIVITIES OUTSIDE THE CONSTRUCTION LIMITS SHALL FOLLOW SPECIFICATION 105.25- 105.29 OF THE STANDARD SPECIFICATIONS FOR CONSTRUCTION.

SALMON VERY FINE SANDY LOAM
25-50% SLOPE
TYPE C SOIL
K VALUE = 0.49
HIGHLY ERODIBLE

SUNNY SILT LOAM
0-2% SLOPE
TYPE C SOIL
K VALUE = 0.32
NOT HIGHLY ERODIBLE

NICHOLVILLE SILT LOAM
3-8% SLOPE
TYPE C SOIL
K = 0.49
POTENTIALLY HIGHLY ERODIBLE

VT STATE PLANE GRID

RIPARIAN BUFFER

ESTATE OF JOAN M. PELTON
JESSIE PELTON - TRUSTEE

ESTATE OF JOAN M. PELTON
JESSIE PELTON - TRUSTEE

TH 3
PEKIN BROOK ROAD

60+00

61+00

61+49

STA. 61+00.00
LIMIT OF CONSTRUCTION

EXISTING ROW

EXISTING ROW

STA. 116+75.00
END APPROACH

VT RT 14
TO EAST MONTPELIER

113+00

114+00

115+00

116+00

117+00

118+00

VT RT 14
TO CALAIS

STA. 112+75.00
BEGIN APPROACH

STA. 113+25.00
END APPROACH
BEGIN PROJECT

EXISTING ROW

STA. 116+25.00
END PROJECT
BEGIN APPROACH

GRAVEL
DRIVE

VT ROUTE 14 STA. 116+23.72
PEKIN BROOK RD STA. 61+49.36
DELTA = 84° 16' 5.88"

BRUNS, CLARA E.

PEKIN BROOK

OHW

720

RIPARIAN BUFFER

ESTATE OF JOAN M. PELTON
JESSIE PELTON - TRUSTEE

LEGEND

SOIL BOUNDARY

PARSONS BRINCKERHOFF
650 ELM STREET
MANCHESTER, NH 03101

PROJECT NAME: CALAIS
PROJECT NUMBER: BHF 037-2(10)

FILE NAME: z12Sbl44exstsitebdr.dgn
PROJECT LEADER: G.K.DONINGTON
DESIGNED BY: S.BROWN
ESPC EXISTING CONDITIONS SITE PLAN

PLOT DATE: 31-JULY-2015
DRAWN BY: S.BROWN
CHECKED BY: A.STOCKIN
SHEET 49 OF 53

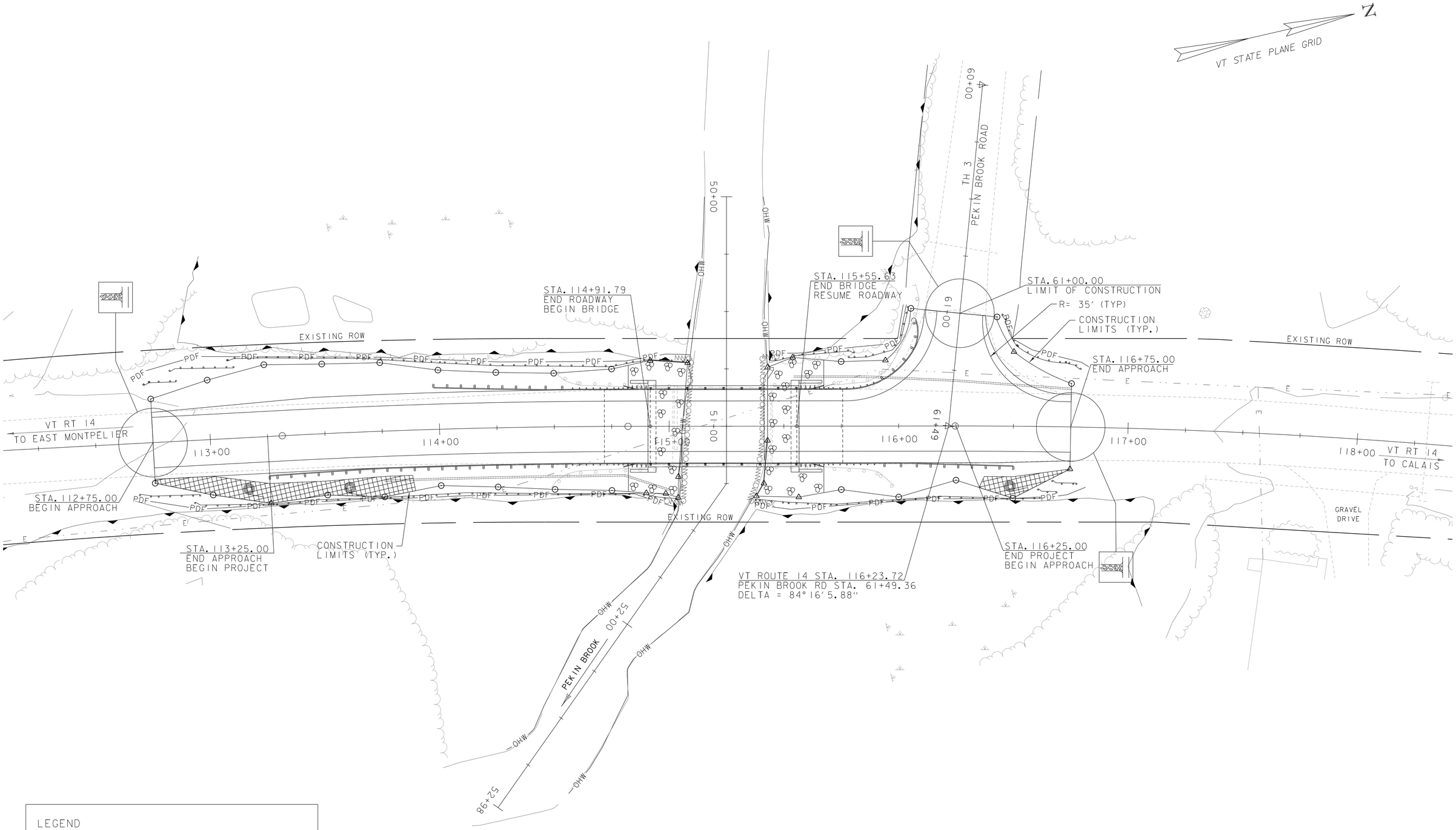

LEGEND

STABILIZED CONSTRUCTION ENTRANCE

PARSONS BRINCKERHOFF
650 ELM STREET
MANCHESTER, NH 03101

PROJECT NAME: CALAIS
PROJECT NUMBER: BHF 037-2(10)

FILE NAME: z12b144erobdr.dgn
PROJECT LEADER: G.K.DONINGTON
DESIGNED BY: S.BROWN
EPSC CONST. CONDITIONS SITE PLAN

PLOT DATE: 31-JULY-2015
DRAWN BY: S.BROWN
CHECKED BY: A.STOCKIN
SHEET 50 OF 53

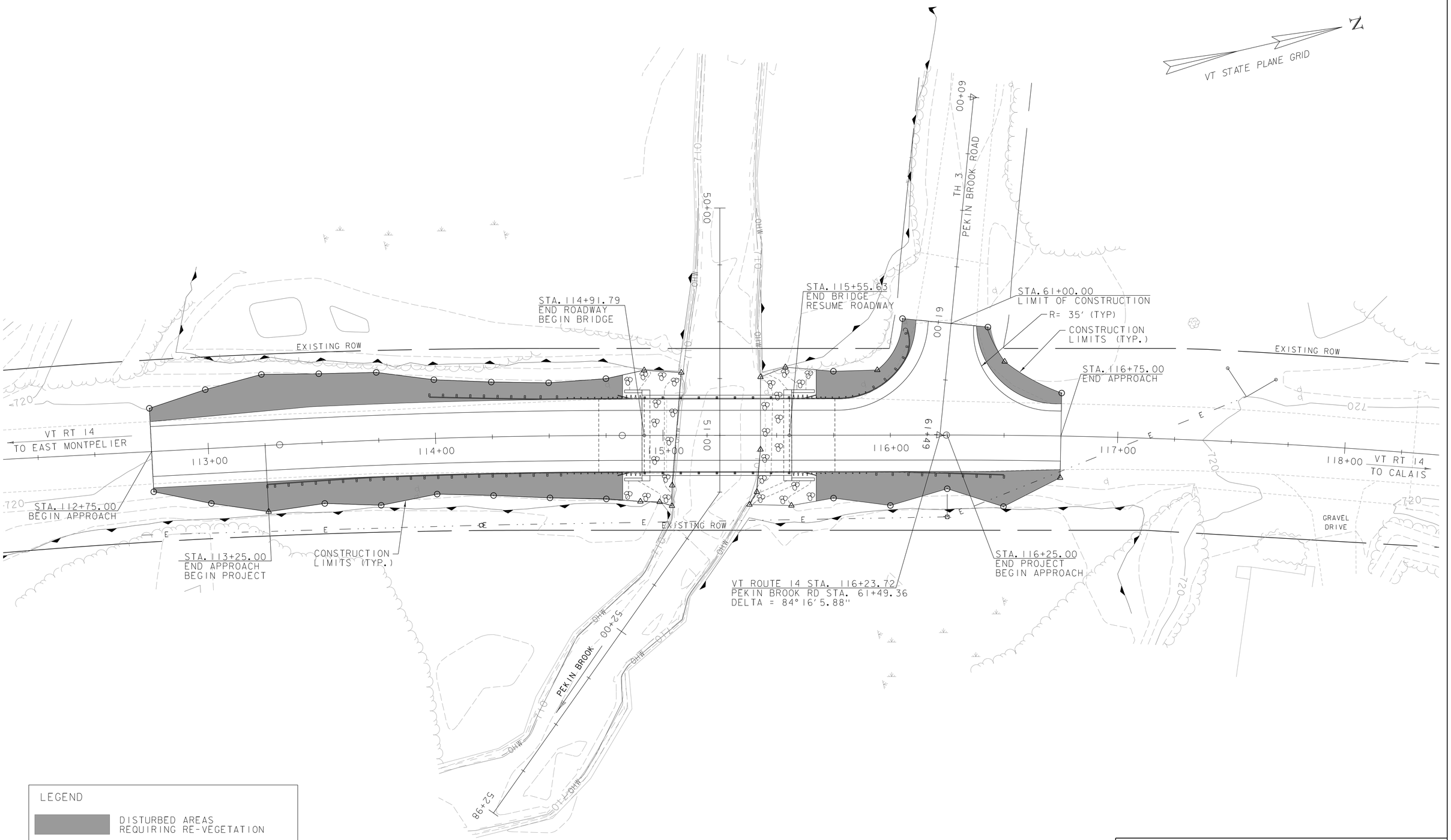

PARSONS BRINCKERHOFF
650 ELM STREET
MANCHESTER, NH 03101

PROJECT NAME: CALAIS	
PROJECT NUMBER: BHF 037-2(10)	
FILE NAME: z12Sbl44sitebdr.dgn	PLOT DATE: 31-JULY-2015
PROJECT LEADER: G.K.DONINGTON	DRAWN BY: S.BROWN
DESIGNED BY: S.BROWN	CHECKED BY: A. STOCKIN
ESPC FINAL CONDITIONS SITE PLAN	SHEET 51 OF 53

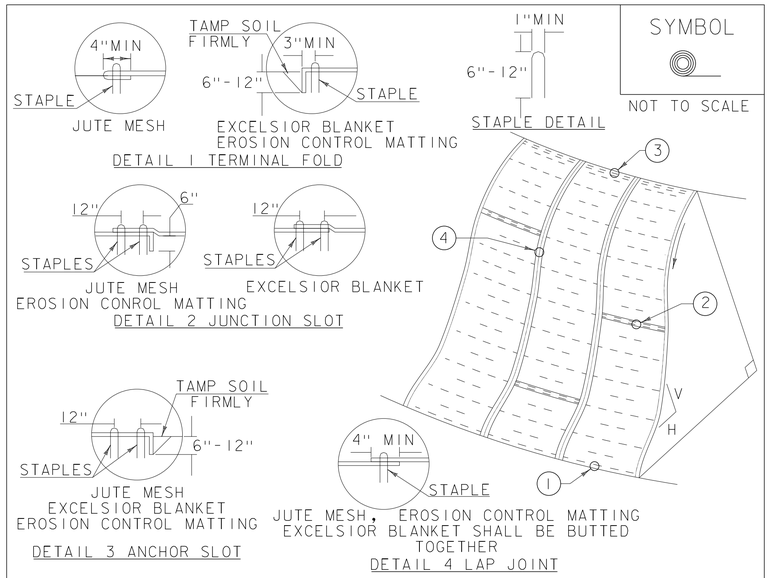

SYMBOL

NOT TO SCALE

CONSTRUCTION SPECIFICATIONS

1. APPLY TO SLOPES GREATER THAN 3H:1V OR WHERE NECESSARY TO AID IN ESTABLISHING VEGETATION.
2. APPLY FERTILIZER, LIME SEED PRIOR TO PLACING MATTING.
3. STAPLES ARE TO BE PLACED ALTERNATELY, IN COLUMNS APPROXIMATELY 2' APART AND IN ROWS APPROXIMATELY 3' APART. APPROXIMATELY 175 STAPLES ARE REQUIRED PER 4'X225' ROLL OF MATERIAL AND 125 STAPLES ARE REQUIRED PER 4'X150' ROLL OF MATERIAL.
4. DISTURBED AREAS SHALL BE SMOOTHLY GRADED. EROSION CONTROL MATERIAL SHALL BE PLACED LOOSELY OVER GROUND SURFACE. DO NOT STRETCH.
5. ALL TERMINAL ENDS AND TRANSVERSE LAPS SHALL BE STAPLED AT APPROXIMATELY 12" INTERVALS.

ADAPTED FROM DETAILS PROVIDED BY: NEW YORK STATE DEC
ORIGINALLY DEVELOPED BY USDA-NRCS
VERMONT DEPARTMENT OF ENVIRONMENTAL CONSERVATION

ROLLED EROSION CONTROL PRODUCT (RECP) SIDE SLOPE

NOTES:
REFER TO "THE VERMONT STANDARDS & SPECIFICATIONS FOR EROSION PREVENTION & SEDIMENT CONTROL -2006- "FROM THE VT AGENCY OF NATURAL RESOURCES FOR ADDITIONAL GUIDANCE.
THIS WORK SHALL BE PERFORMED IN ACCORDANCE WITH SECTION 653 AND AS SHOWN IN THE PLANS FOR TEMPORARY EROSION MATTING (PAY ITEM 653.20) OR PERMANENT EROSION MATTING (PAY ITEM 653.21).

REVISIONS	
APRIL 16, 2007	JMF
JANUARY 13, 2009	WHF

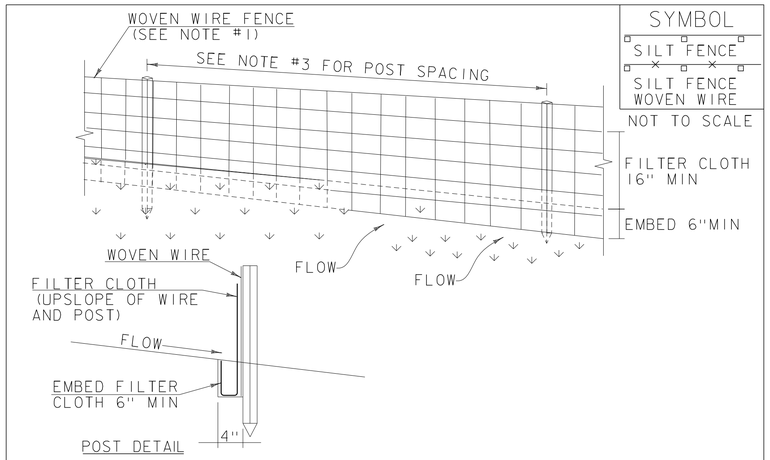

SYMBOL

SILT FENCE

SILT FENCE WOVEN WIRE

NOT TO SCALE

CONSTRUCTION SPECIFICATIONS

1. WOVEN WIRE REINFORCED FENCE IS REQUIRED WITHIN 100' UPSLOPE OF RECEIVING WATERS WHEN THE PROJECT FALLS UNDER A CONSTRUCTION STORMWATER PERMIT. WOVEN WIRE SHALL BE A MIN. 14 GAUGE WITH A 6" MAX. MESH OPENING.
2. FILTER CLOTH SHALL BE EITHER FILTER X, MIRAFI100X, STABILINKA T140N OR APPROVED EQUIVALENT.
3. POST SPACING FOR WIRE-BACKED FENCE SHALL BE 10' MAXIMUM. FOR FILTER-CLOTH FENCE, WHEN ELONGATION IS >50%, POST SPACING SHALL NOT EXCEED 4' AND WHEN ELONGATION IS <50%, POST SPACING SHALL NOT EXCEED 6'.
4. WOVEN WIRE FENCE IS TO BE FASTENED SECURELY TO FENCE POSTS WITH WIRE TIES. FILTER CLOTH IS TO BE FASTENED SECURELY TO WOVEN WIRE FENCE WITH TIES SPACED EVERY 24" AT TOP AND MID SECTION.
5. WHEN TWO SECTIONS OF FILTER CLOTH ADJOIN EACH OTHER THEY SHALL BE OVER-LAPPED BY 6" AND FOLDED.
6. MAINTENANCE SHALL BE PERFORMED AS NEEDED AND MATERIAL REMOVED WHEN SEDIMENT REACHES HALF OF FABRIC HEIGHT.

ADAPTED FROM DETAILS PROVIDED BY: NEW YORK STATE DEC
ORIGINALLY DEVELOPED BY USDA-NRCS
VERMONT DEPARTMENT OF ENVIRONMENTAL CONSERVATION

SILT FENCE

NOTES:
REFER TO "THE VERMONT STANDARDS & SPECIFICATIONS FOR EROSION PREVENTION & SEDIMENT CONTROL -2006- "FROM THE VT AGENCY OF NATURAL RESOURCES FOR ADDITIONAL GUIDANCE.

THIS WORK SHALL BE PERFORMED IN ACCORDANCE WITH SECTION 649 AND AS SHOWN IN THE PLANS FOR GEOTEXTILE FOR SILT FENCE (PAY ITEM 649.51) OR GEOTEXTILE FOR SILT FENCE, WOVEN WIRE REINFORCED (PAY ITEM 649.515).

REVISIONS	
MARCH 21, 2008	WHF
DECEMBER 11, 2008	WHF
JANUARY 13, 2009	WHF

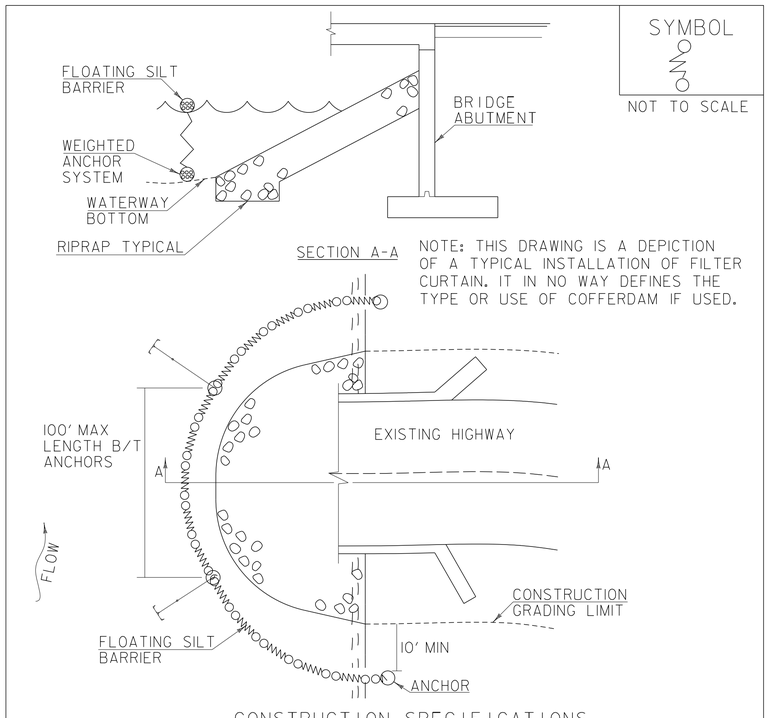

SYMBOL

NOT TO SCALE

NOTE: THIS DRAWING IS A DEPICTION OF A TYPICAL INSTALLATION OF FILTER CURTAIN. IT IN NO WAY DEFINES THE TYPE OR USE OF COFFERDAM IF USED.

CONSTRUCTION SPECIFICATIONS

1. FILTER CURTAIN SHALL NOT BE PLACED ACROSS A FLOWING WATERWAY, OR IN A WATERWAY WITH STREAM VELOCITIES GREATER THAN 1.5 FEET/SECOND.
2. MAXIMUM 100' LENGTH BETWEEN ANCHORS.
3. LAST SECTION SHALL TERMINATE A MINIMUM OF 10' BEYOND LIMIT OF DISTURBANCE.
4. THE WEIGHTED ANCHOR SYSTEM SHALL BE A TYPE WHICH ALLOWS THE CURTAIN TO CONFORM TO THE BOTTOM OF THE WATERWAY.
5. THE CURTAIN SHALL BE REMOVED BY SLOWLY PULLING TOWARD THE SHORE MINIMIZING THE ESCAPE OF SEDIMENTS INTO WATERWAY.

FILTER CURTAIN

THIS WORK SHALL BE PERFORMED IN ACCORDANCE WITH SECTION 649 FOR GEOTEXTILE FOR FILTER CURTAIN (PAY ITEM 649.61).

REVISIONS	
APRIL 1, 2008	WHF
JANUARY 13, 2009	WHF
SEPTEMBER 4, 2009	WHF

PROJECT NAME: CALAIS
PROJECT NUMBER: BHF 037-2(10)

FILE NAME: z12b146epscdet.dgn
PROJECT LEADER: G.K.DONINGTON
DESIGNED BY: S.BROWN
EPSC DETAILS (1) OF (2)

PLOT DATE: 31-JULY-2015
DRAWN BY: S.BROWN
CHECKED BY: A.STOCKIN
SHEET 52 OF 53

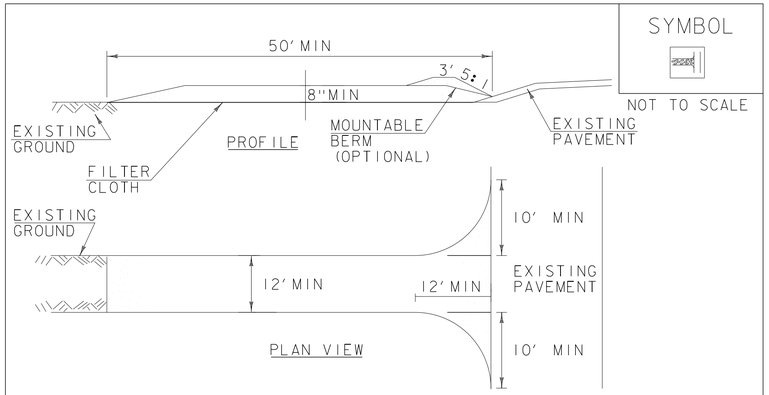

CONSTRUCTION SPECIFICATIONS

1. STONE SIZE- USE 1-4" STONE, RECLAIMED OR RECYCLED CONCRETE EQUIVALENT.
2. LENGTH- NOT LESS THAN 50' (EXCEPT ON A SINGLE RESIDENCE LOT WHERE A 30' MINIMUM LENGTH APPLIES).
3. THICKNESS- NOT LESS THAN 8".
4. WIDTH- 12' MINIMUM, BUT NOT LESS THAN THE FULL WIDTH AT POINTS WHERE INGRESS OR EGRESS OCCURS. 24' IF SINGLE ENTRANCE TO SITE.
5. GEOTEXTILE MUST BE PLACED OVER THE ENTIRE AREA PRIOR TO PLACING STONE.
6. SURFACE WATER- ALL SURFACE WATER FLOWING OR DIVERTED TOWARD CONSTRUCTION ENTRANCES SHALL BE PIPED BENEATH THE ENTRANCE. IF PIPING IS IMPRACTICAL, A MOUNTABLE BERM WITH 5:1 SLOPES WILL BE PERMITTED.
7. MAINTENANCE- THE ENTRANCE SHALL BE MAINTAINED IN A CONDITION WHICH WILL PREVENT TRACKING OR FLOWING OF SEDIMENT ONTO PUBLIC RIGHTS-OF-WAY, ALL SEDIMENT SPILLED, DROPPED, WASHED OR TRACKED ONTO PUBLIC RIGHTS-OF-WAY MUST BE REMOVED IMMEDIATELY.
8. WHEN WASHING IS REQUIRED, IT SHALL BE DONE ON AN AREA STABILIZED WITH STONE AND WHICH DRAINS INTO AN APPROVED SEDIMENT TRAPPING DEVICE.
9. PERIODIC INSPECTION AND NEEDED MAINTENANCE SHALL BE PROVIDED ACCORDING TO PERMIT REQUIREMENTS.

ADAPTED FROM DETAILS PROVIDED BY: NEW YORK STATE DEC
ORIGINALLY DEVELOPED BY USDA-NRCS
VERMONT DEPARTMENT OF ENVIRONMENTAL CONSERVATION

STABILIZED CONSTRUCTION ENTRANCE

NOTES:
REFER TO "THE VERMONT STANDARDS & SPECIFICATIONS FOR EROSION PREVENTION & SEDIMENT CONTROL -2006- "FROM THE VT AGENCY OF NATURAL RESOURCES FOR ADDITIONAL GUIDANCE.

THIS WORK SHALL BE PERFORMED IN ACCORDANCE WITH SECTION 653 FOR VEHICLE TRACKING PAD (PAY ITEM 653.35) OR AS SPECIFIED IN THE CONTRACT.

REVISIONS	
MARCH 24, 2008	WHF
JANUARY 13, 2009	WHF

VAOT LOW GROW/FINE FESCUE MIX						
	LBS/AC					
WEIGHT	BROADCAST	HYDROSEED	NAME	LATIN NAME	GERM	PURITY
38%	57	95	CREEPING RED FESCUE	FESTUCA RUBRA VAR. RUBRA	90%	98%
29%	43.5	72.5	HARD FESCUE	FESTUCA LONGIFOLIA	85%	95%
15%	22.5	37.5	CHEWINGS FESCUE	FESTUCA RUBRA VAR. COMMUTATA	87%	95%
15%	22.5	37.5	ANNUAL RYEGRASS	LOLIUM MULTIFLORUM	90%	95%
3%	4.5	7.5	INERTS			
100%	150	250				

VAOT RURAL AREA MIX						
	LBS/AC					
WEIGHT	BROADCAST	HYDROSEED	NAME	LATIN NAME	GERM	PURITY
37.5%	22.5	45	CREEPING RED FESCUE	FESTUCA RUBRA VAR. RUBRA	85%	98%
37.5%	22.5	45	TALL FESCUE	FESTUCA ARUNDINACEA	90%	95%
5.0%	3	6	RED TOP	AGROSTIS GIGANTEA	90%	95%
15.0%	9	18	WHITE FIELD CLOVER	TRIFOLIUM REPENS	85%	98%
5.0%	3	6	ANNUAL RYE GRASS	LOLIUM MULTIFLORUM	85%	95%
100%	60	120				

GENERAL AMENDMENT GUIDANCE		
FERTILIZER	LIME	
10/20/10	AG LIME	PELLITIZED
500 LBS/AC	2 TONS/AC	1 TONS/AC

CONSTRUCTION GUIDANCE

1. SEED MIX: THE CONTRACTOR SHALL COORDINATE WITH THE RESIDENT ENGINEER ON WHICH SEED MIX TO USE.
2. SEED MIX: USE AS INDICATED IN THE PLANS AND/OR FOR ALL ESTABLISHED UPLAND (NON WETLAND) AREAS DISTURBED BY THE CONTRACTOR.
3. ALL SEED MIXTURES: SHALL NOT HAVE A WEED CONTENT EXCEEDING 0.40% BY WEIGHT AND SHALL BE FREE OF ALL NOXIOUS SEED.
4. FERTILIZER AND LIMESTONE: SHALL FOLLOW RATES SHOWN ON PLAN OR AS DIRECTED BY THE ENGINEER.
5. HAY MULCH: TO BE PLACED ON EARTH SLOPES AT THE RATE OF 2 TONS/ACRE, ACHIEVE 90% GROUND COVER OR AS DIRECTED BY THE ENGINEER.
6. HYDROSEEDING: ALTHOUGH GUIDANCE IS GIVEN ABOVE THE SITE CONDITIONS AND THE TYPE OF HYDROSEED PROPOSED FOR USE WILL ULTIMATELY DICTATE THE AMOUNTS AND TYPES OF SOIL AMENDMENTS TO BE APPLIED.
7. TURF ESTABLISHMENT: PLACING SEED, FERTILIZER, LIME AND MULCH PRIOR TO SEPTEMBER 15 AND AFTER APRIL 15 CAN BETTER ENSURE A VIGOROUS GROWTH OF GRASS.

ADAPTED FROM VTRANS TECHNICAL LANDSCAPE MANUAL FOR ROADWAYS AND TRANSPORTATION FACILITIES

TURF ESTABLISHMENT

THIS WORK SHALL BE PERFORMED IN ACCORDANCE WITH SECTION 651 FOR SEED (PAY ITEM 651.15)

REVISIONS	
JANUARY 12, 2015	WHF

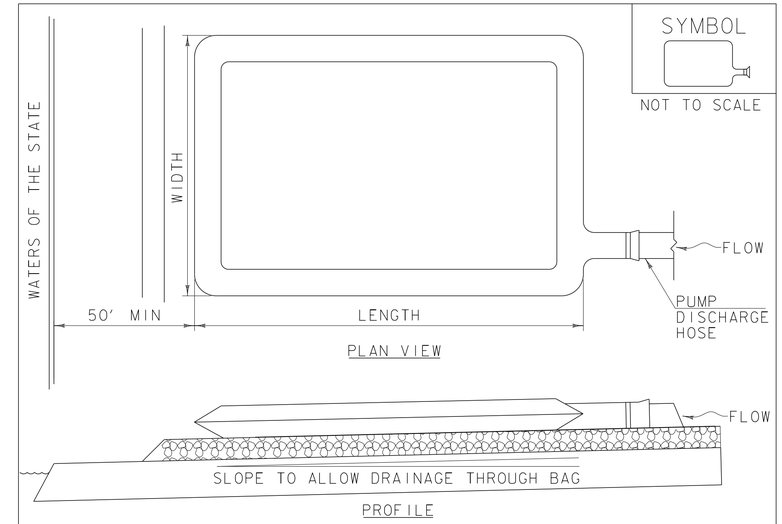

CONSTRUCTION SPECIFICATIONS

1. THE PRIMARY PURPOSE OF FILTER BAG IS TO RETAIN SILT, SAND, AND FINES DURING DEWATERING OPERATIONS.
2. FILTER BAGS SHALL BE INSTALLED ON A VEGETATED SLOPE GRADED TO ALLOW INCOMING WATER TO FLOW THROUGH THE BAG.
3. FILTER BAGS MAY ALSO BE PLACED ON COARSE AGGREGATE, STONE, OR HAYBALES TO INCREASE FILTRATION EFFICIENCY.
4. FILTER BAGS SHALL BE LOCATED A MINIMUM OF 50' FROM WATERS OF THE STATE UNLESS OTHERWISE APPROVED BY THE ENGINEER.
5. THE NECK OF THE FILTER BAG SHALL BE STRAPPED TIGHTLY TO THE DISCHARGE HOSE.
6. A FILTER BAG IS FULL WHEN IT NO LONGER CAN EFFICIENTLY FILTER SEDIMENT OR ALLOW WATER TO PASS AT A REASONABLE RATE.
7. FILTER BAG SHALL BE DISPOSED OF AS APPROVED IN THE EPSC PLAN OR AS DIRECTED BY THE ENGINEER.

FILTER BAG

NOTES:
REFER TO "THE VERMONT STANDARDS & SPECIFICATIONS FOR EROSION PREVENTION & SEDIMENT CONTROL -2006- "FROM THE VT AGENCY OF NATURAL RESOURCES FOR ADDITIONAL GUIDANCE.

THIS WORK SHALL BE PERFORMED IN ACCORDANCE WITH SECTION 653 FOR FILTER BAG (PAY ITEM 653.45) AND AS SPECIFIED IN THE CONTRACT.

REVISIONS	
MARCH 24, 2008	WHF
JANUARY 13, 2009	WHF

PROJECT NAME: CALAIS
PROJECT NUMBER: BHF 037-2(10)

FILE NAME: zl2b146epscdet.dgn
PROJECT LEADER: G.K.DONINGTON
DESIGNED BY: S.BROWN
EPSC DETAILS (2) OF (2)

PLOT DATE: 31-JULY-2015
DRAWN BY: S.BROWN
CHECKED BY: A.STOCKIN
SHEET 53 OF 53