STATE OF VERMONT
AGENCY OF TRANSPORTATION

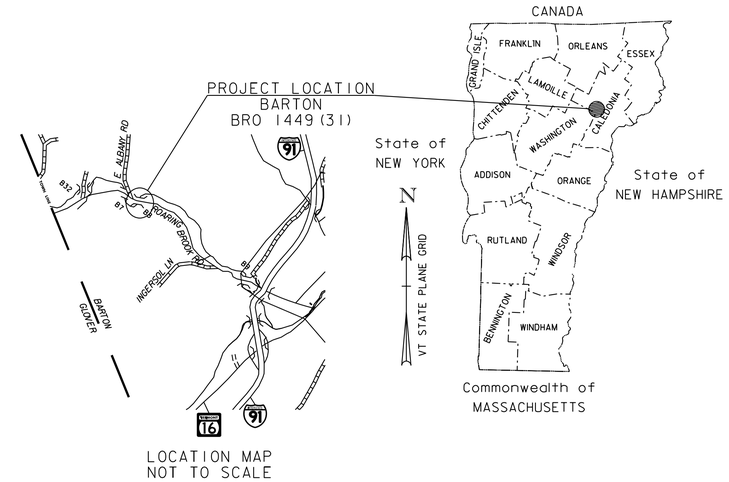

PROPOSED IMPROVEMENT

BRIDGE PROJECT
TOWN OF BARTON
COUNTY OF ORLEANS

ROARING BROOK ROAD (TH #2) (RURAL MINOR COLLECTOR) BRIDGE NO. 8

PROJECT LOCATION: LOCATED IN THE TOWN OF BARTON, ON ROARING BROOK RD (TH #2), APPROXIMATELY 0.767 MILES EASTERLY OF THE GLOVER/BARTON TOWN LINE AND EXTENDING APPROXIMATELY 500 FEET TO THE END.

PROJECT DESCRIPTION: WORK TO BE PERFORMED UNDER THIS PROJECT INCLUDES REPLACEMENT OF THE EXISTING STRUCTURE WITH A NEW STRUCTURE INCLUDING RELATED ROADWAY AND CHANNEL WORK.

LENGTH OF ROADWAY: 452.34 FEET
LENGTH OF STRUCTURE: 47.66 FEET
LENGTH OF PROJECT: 500.00 FEET

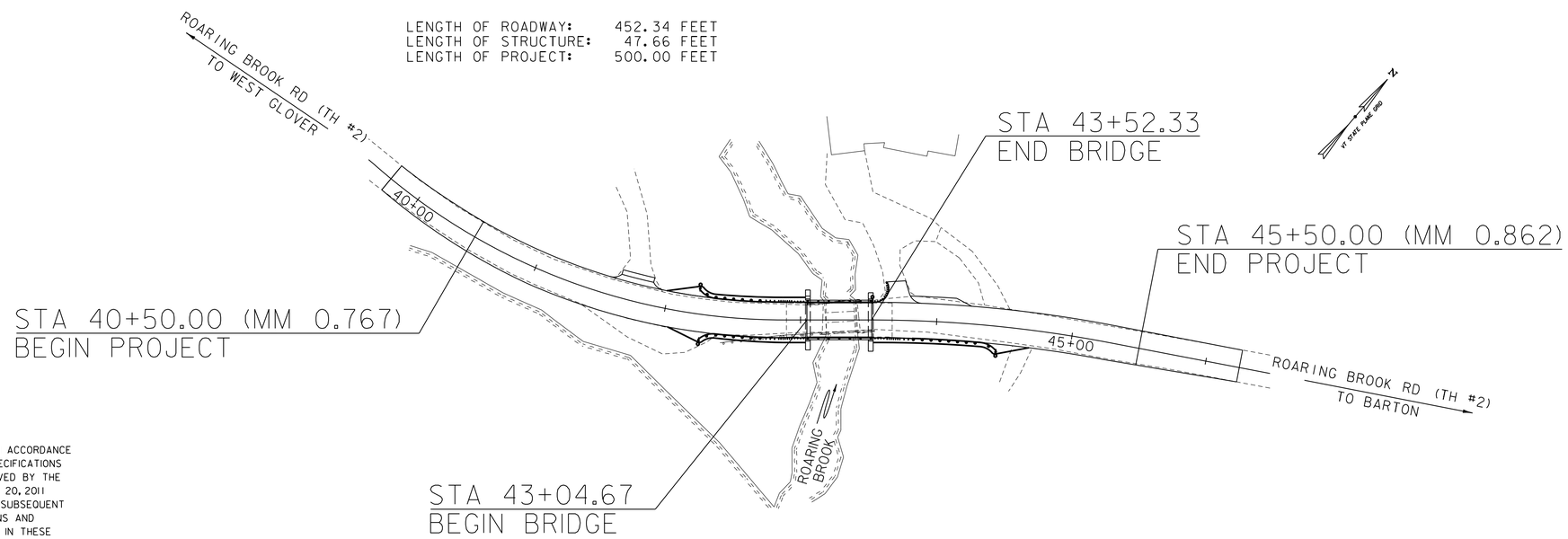

BARTON
BRO 1449(31)
FINAL PLANS
JULY 15, 2014

CONSTRUCTION IS TO BE CARRIED ON IN ACCORDANCE WITH THESE PLANS AND THE STANDARD SPECIFICATIONS FOR CONSTRUCTION DATED 2011, AS APPROVED BY THE FEDERAL HIGHWAY ADMINISTRATION ON JULY 20, 2011 FOR USE ON THIS PROJECT, INCLUDING ALL SUBSEQUENT REVISIONS AND SUCH REVISED SPECIFICATIONS AND SPECIAL PROVISIONS AS ARE INCORPORATED IN THESE PLANS.

QUALITY ASSURANCE PROGRAM : LEVEL 2

SURVEYED BY : VTRANS
SURVEYED DATE : 8/11/2011

DATUM
VERTICAL NAVD 88
HORIZONTAL NAD 83 (96)

0 50 100
SCALE IN FEET

CONSULTING ENGINEERS
540 Commercial Street
Manchester, NH 03101
(603) 668-8223
www.cldengineers.com

CHIEF ENGINEER OF THE HIGHWAY DIVISION
APPROVED _____ DATE _____

PROJECT MANAGER : TODD SUMNER, P.E.

PROJECT NAME : BARTON
PROJECT NUMBER : BRO 1449(31)

SHEET 1 OF 52 SHEETS

CLD 12-0174

STATE OF VERMONT
AGENCY OF TRANSPORTATION

PRELIMINARY INFORMATION SHEET (BRIDGE)

Version 11.06.15

LRFD

INDEX OF SHEETS

PLAN SHEETS

1	TITLE SHEET
2	PRELIMINARY INFORMATION SHEET
3	TYPICAL BRIDGE SECTIONS
4 - 5	TYPICAL ROADWAY SECTIONS
6	TYPICAL EARTHWORK SECTIONS
7 - 8	PROJECT NOTES
9 - 11	QUANTITY SHEETS
12 - 13	BRIDGE QUANTITY SHEETS
14	CONVENTIONAL SYMBOLOGY LEGEND SHEET
15 - 16	TIE SHEETS
17	LAYOUT SHEET
18 - 19	PROFILE AND BANKING DIAGRAM SHEETS
20	TRAFFIC SIGN SUMMARY SHEET
21	SIGN DETAIL SHEET
22	BORING INFORMATION SHEET
23 - 26	BORING LOGS
27	PLAN AND ELEVATION
28	BRIDGE PLAN AND TYPICAL SECTIONS
29 - 31	NEXT BEAM DETAILS
32	BEARING DETAILS
33	ABUTMENT 1 PLAN
34	ABUTMENT 1 REINFORCING
35	ABUTMENT 2 PLAN
36	ABUTMENT 2 REINFORCING
37	BEAM-END CLOSURE POUR REINFORCING
38	APPROACH SLAB DETAILS
39	RAIL AND CURB LAYOUT SHEET
40	REINFORCING STEEL SCHEDULE SHEET 1
41 - 44	ROADWAY CROSS SECTIONS
45 - 46	CHANNEL CROSS SECTIONS
47	EROSION CONTROL NARRATIVE
48 - 50	EPSC PLAN SHEETS
51 - 52	EPSC DETAILS

STANDARDS LIST

B-5	SLOPE GRADING, EMBANKMENTS, MUCK	06-01-1994
B-17	GUARDRAIL, BRIDGES, REST AREA, TURNOUTS	02-23-1995
B-71	STANDARD FOR RESIDENTIAL AND COMMERCIAL DRIVES	07-08-2005
E-193	PAVEMENT MARKING DETAILS	08-18-1995
G-1	STEEL BEAM GUARDRAIL DETAILS (POST, DELINEATOR, TYPICALS)	02-10-2014
G-1d	STEEL BEAM GUARDRAIL DETAILS (END TERMINAL, ANCHOR, MEDIAN)	02-10-2014
J-3	MAIL BOX SUPPORT DETAILS	08-07-1995
S-360A	BRIDGE RAILING, GALVANIZED NETC 2 RAIL	12-14-2009
S-360B	GUARDRAIL APPROACH SECTION, GALVANIZED NETC 2 RAIL	12-14-2009
T-40	DELINEATORS AND MILEPOSTS	01-02-2013
T-42	BRIDGE NUMBER PLAQUE	04-09-2014
T-45	SQUARE TUBE SIGN POST AND ANCHOR	01-02-2013

STRUCTURES DETAILS

SD-501.00	CONCRETE DETAILS AND NOTES	02-09-2012
SD-502.00	CONCRETE DETAILS AND NOTES	10-10-2012
SD-516.10	BRIDGE ASPHALTIC PLUG	08-29-2011

FINAL HYDRAULIC REPORT

HYDROLOGIC DATA

Date: 10/24/13

DRAINAGE AREA : 10.0 SQ. MI.
CHARACTER OF TERRAIN : HILLY TO MOUNTAINOUS
STREAM CHARACTERISTICS : SINUOUS, NON-ALLUVIAL, AND PERENNIAL CHANNEL
NATURE OF STREAMBED : GRAVEL AND COBBLES WITH BOULDERS

PEAK FLOW DATA

Q 2.33 =	500 CFS	Q 50 =	1380 CFS
Q 10 =	900 CFS	Q 100 =	1610 CFS
Q 25 =	1150 CFS	Q 500 =	2090 CFS

DATE OF FLOOD OF RECORD: UNKNOWN
ESTIMATED DISCHARGE: N/A
WATER SURFACE ELEV.: N/A
NATURAL STREAM VELOCITY : @ Q25 = 11.7 FPS
ICE CONDITIONS : MODERATE
DEBRIS: MODERATE
DOES THE STREAM REACH MAXIMUM HIGHWATER ELEV. RAPIDLY? NO
IS ORDINARY RISE RAPID? NO
IS STAGE AFFECTED BY UPSTREAM OR DOWNSTREAM CONDITIONS? NO
IF YES, DESCRIBE:

WATERSHED STORAGE: 4%
HEADWATERS:
UNIFORM: X
IMMEDIATELY ABOVE SITE:

EXISTING STRUCTURE INFORMATION

STRUCTURE TYPE: CONCRETE T-BEAM WITH REINFORCED CONCRETE ABUTMENTS
YEAR BUILT: 1928
CLEAR SPAN(NORMAL TO STREAM): 26 FT
VERTICAL CLEARANCE ABOVE STREAMBED: 7.3 FT
WATERWAY OF FULL OPENING: 166 SQ. FT.
DISPOSITION OF STRUCTURE: REMOVE AND REPLACE
TYPE OF MATERIAL UNDER SUBSTRUCTURE: SEE BORINGS

WATER SURFACE ELEVATIONS AT:

Q2.33 =	1132.5 FT	VELOCITY =	7.4 FPS
Q10 =	1133.5 FT	"	10.7 FPS
Q25 =	1135.4 FT	"	10.4 FPS
Q50 =	1136.3 FT	"	11.2 FPS
Q100 =	1137.2 FT	"	12.1 FPS

LONG TERM STREAMBED CHANGES: MINIMAL DUE TO LARGE SIZE OF STREAMBED MATERIAL

IS THE ROADWAY OVERTOPPED BELOW Q100: NO
FREQUENCY: N/A
RELIEF ELEVATION: 1139.4 FT
DISCHARGE OVER ROAD @Q100: N/A

UPSTREAM STRUCTURE

TOWN:	BARTON	DISTANCE:	0.2 MI.
HIGHWAY # :	TH #2 ROARING BROOK RD	STRUCTURE #:	7
CLEAR SPAN:	18 FT	CLEAR HEIGHT:	6 FT
YEAR BUILT:	UNKNOWN	FULL WATERWAY:	108 FT
STRUCTURE TYPE:	UNKNOWN		

DOWNSTREAM STRUCTURE

TOWN:	BARTON	DISTANCE:	0.9 MI.
HIGHWAY # :	TH NO. 2	STRUCTURE #:	9
CLEAR SPAN:	36 FT	CLEAR HEIGHT:	6 FT
YEAR BUILT:	1928	FULL WATERWAY:	178 FT
STRUCTURE TYPE:	CONCRETE T-BEAM		

PROPOSED STRUCTURE

STRUCTURE TYPE: CONCRETE NEXT BEAM STRUCTURE ON INTEGRAL ABUTMENTS

CLEAR SPAN(NORMAL TO STREAM): 42 FT
VERTICAL CLEARANCE ABOVE STREAMBED: 7.5 FT
WATERWAY OF FULL OPENING: 213 SQ. FT.

WATER SURFACE ELEVATIONS AT:

Q2.33 =	1132.2 FT	VELOCITY=	8.5 FPS
Q10 =	1133.6 FT	"	9.9 FPS
Q25 =	1134.3 FT	"	11.7 FPS
Q50 =	1134.9 FT	"	12.4 FPS
Q100 =	1135.4 FT	"	12.9 FPS

IS THE ROADWAY OVERTOPPED BELOW Q100: NO
FREQUENCY: N/A
RELIEF ELEVATION: 1139.7 FT
DISCHARGE OVER ROAD @Q100: N/A

AVERAGE LOW ELEVATION OF SUPERSTRUCTURE: 1135.4 FT
VERTICAL CLEARANCE: @ Q25 = 1.1 FT

SCOUR: CONTRACTION SCOUR 1 FT @ Q500

REQUIRED CHANNEL PROTECTION: TYPE IV STONE FILL

PERMIT INFORMATION

		DEPTH OR ELEVATION:
AVERAGE DAILY FLOW:	120 CFS	
ORDINARY LOW WATER:	55 CFS	1129.9 FT
ORDINARY HIGH WATER:	200 CFS	1130.8 FT

TEMPORARY BRIDGE REQUIREMENTS

STRUCTURE TYPE: NO TEMPORARY STRUCTURE
CLEAR SPAN (NORMAL TO STREAM): N/A
VERTICAL CLEARANCE ABOVE STREAMBED: N/A
WATERWAY AREA OF FULL OPENING: N/A

ADDITIONAL INFORMATION

TRAFFIC MAINTENANCE NOTES

1. MAINTAIN TRAFFIC ON AN OFF SITE DETOUR.
2. TRAFFIC SIGNALS ARE NOT NECESSARY.
3. SIDEWALKS ARE NOT NECESSARY

DESIGN VALUES

1. DESIGN LIVE LOAD		HL-93
2. FUTURE PAVEMENT	d_p:	0.0 INCH
3. DESIGN SPAN	L:	45.00 FT
4. MIN. MID-SPAN POS. CAMBER @ RELEASE (PRESTRESSED UNITS)	Δ:	0.71 INCH
5. PRESTRESSING STRAND (0.60 INCH DIAMETER - LOW RELAX)	f_y:	270 KSI
6. PRESTRESSED CONCRETE STRENGTH	f'_c:	6.0 KSI
7. PRESTRESSED CONCRETE RELEASE STRENGTH	f'_{ci}:	4.0 KSI
8. CONCRETE, HIGH PERFORMANCE CLASS AA	f'_c:	4.0 KSI
9. CONCRETE, HIGH PERFORMANCE CLASS A	f'_c:	4.0 KSI
10. CONCRETE, HIGH PERFORMANCE CLASS B	f'_c:	3.5 KSI
11. CONCRETE, CLASS C	f'_c:	3.0 KSI
12. REINFORCING STEEL	f_y:	60 KSI
13. STRUCTURAL STEEL AASHTO M270	f_y:	---
14. SOIL UNIT WEIGHT	γ:	0.120 KCF
15. NOMINAL BEARING RESISTANCE OF SOIL	q_n:	---
16. SOIL BEARING RESISTANCE FACTOR (REFER TO AASHTO LRFD)	ϕ:	---
17. NOMINAL BEARING RESISTANCE OF ROCK	q_n:	---
18. ROCK BEARING RESISTANCE FACTOR (REFER TO AASHTO LRFD)	ϕ:	---
19. NOMINAL AXIAL PILE RESISTANCE	q_p:	284.0 KIPS
20. PILE YIELD STRENGTH ASTM A572	f_y:	50 KSI
21. PILE SIZE		HP 12X63
22. EST. PILE LENGTH AT ABUTMENT #1	L_{p1}	72 FT
EST. PILE LENGTH AT ABUTMENT #2	L_{p2}	71 FT
23. PILE RESISTANCE FACTOR	ϕ:	0.50
24. LATERAL PILE DEFLECTION	Δ:	0.16 INCH
25. BASIC WIND SPEED	V_{3s}:	---
26. MINIMUM GROUND SNOW LOAD	p_g:	---
27. SEISMIC DATA PGA: 8 %g	S_s:	18 %g
	S_1:	6 %g

LRFR LOAD RATING FACTORS

LOADING LEVELS	TRUCK						
	H-20	HL-93	3S2	6 AXLE	3A. STR.	4A. STR.	5A. SEMI
TONNAGE	20	36	36	66	30	34.5	38
INVENTORY	1.57	1.38					
POSTING							
OPERATING	1.96	1.79	2.06	1.08	1.43	1.31	1.69
COMMENTS:							

AS BUILT "REBAR" DETAIL

LEVEL I	LEVEL II	LEVEL III
TYPE:	TYPE:	TYPE:
GRADE:	GRADE:	GRADE:

TRAFFIC DATA

YEAR	ADT	DHV	% D	% T	ADTT	
2014	920	100	64	2.6	25	20 year ESAL for flexible pavement from 2014 to 2034 : 188000
2034	980	110	64	3.4	35	40 year ESAL for flexible pavement from 2014 to 2054 : 440000
						Design Speed : 50 mph

PILE DRIVING AND TESTING REQUIREMENTS

1. NOMINAL PILE DRIVING CAPACITY	Rndr:	218.00 KIP
2. PILE TEST RESISTANCE FACTOR	ϕ:	0.65
3. MAXIMUM PILE TIP ELEVATION		SEE BORINGS
4.		

PROJECT NAME: BARTON
PROJECT NUMBER: BRO 1449(31)

FILE NAME: z11j068pi.dgn
PROJECT LEADER: J. BYATT
DESIGNED BY: S. BEAUMONT
PRELIMINARY INFORMATION SHEET

PLOT DATE: 7/15/2014
DRAWN BY: M. HALEY
CHECKED BY: J. BYATT
SHEET 2 OF 52

MODEL: PI
CLD 12-0121

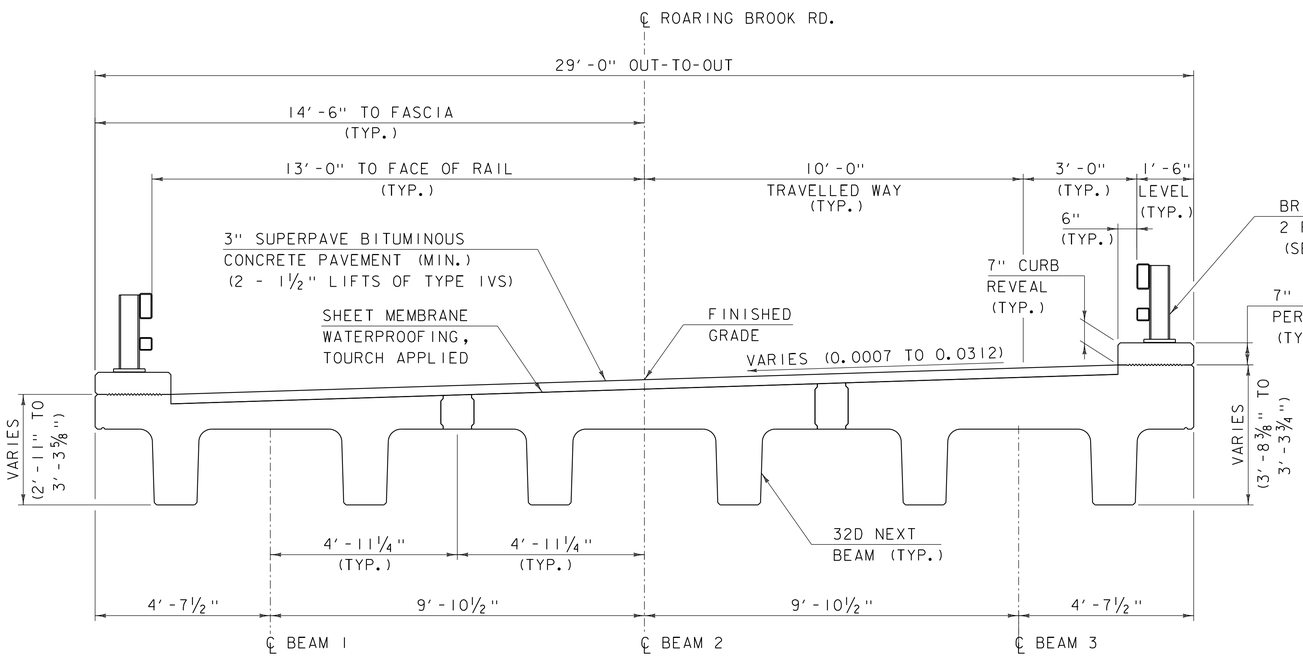

TYPICAL BRIDGE SECTION

SCALE: ½" = 1'-0"

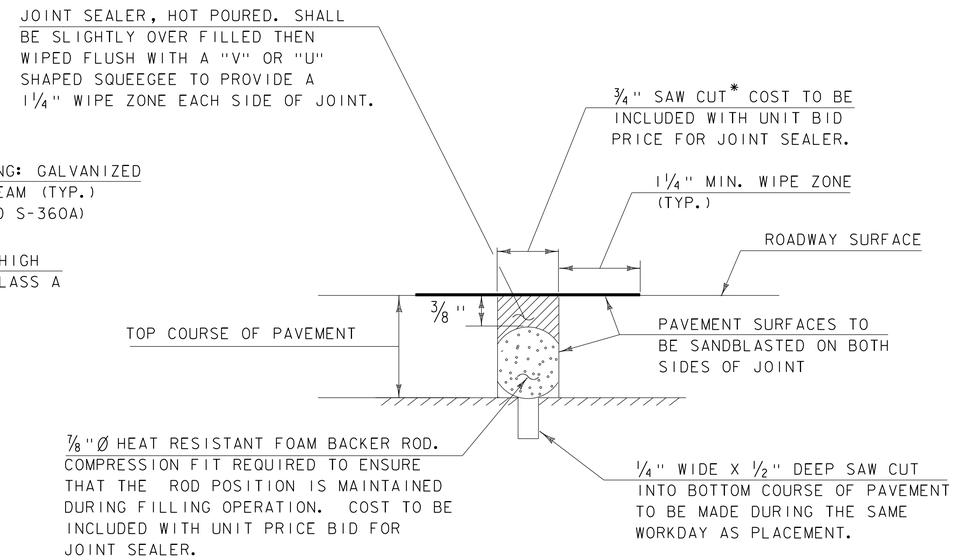

SAWED PAVEMENT JOINT DETAIL

(NOT TO SCALE)

* JOINT IS TO BE LOCATED ACCURATELY BY STRING LINING, OR OTHER MEANS, PRIOR TO PAVING, SO THAT THE SAW CUTS WILL BE MADE DIRECTLY OVER THE END OF CONCRETE DECK. JOINT SHALL BE CUT DRY IN A SINGLE PASS AND BE SEALED WITHIN 24 HOURS OR PRIOR TO EXPOSURE TO TRAFFIC. JOINT SHALL BE CLEANED PRIOR TO APPLYING THE JOINT SEALER. ALL WORK SHALL BE PAID UNDER ITEM 524.11, "JOINT SEALER, HOT POURED".

PROJECT NAME: BARTON	
PROJECT NUMBER: BRO 1449(31)	
FILE NAME: 11j068/cos/z11j068sup.dgn	PLOT DATE: 7/15/2014
PROJECT LEADER: J. BYATT	DRAWN BY: M. SMITH
DESIGNED BY: S. BEAUMONT	CHECKED BY: J. BYATT
TYPICAL BRIDGE SECTION	SHEET 3 OF 52

CONSULTING ENGINEERS

CLD 12-0174 MODEL: SUP01

MATERIAL TOLERANCES (IF USED ON PROJECT)	
SURFACE	
- PAVEMENT (TOTAL THICKNESS)	+/- 1/4"
- AGGREGATE SURFACE COURSE	+/- 1/2"
SUBBASE	+/- 1"
SAND BORROW	+/- 1"

3" BITUMINOUS CONCRETE PAVEMENT (2-1 1/2" LIFTS) (TYPE 1VS)
2" BITUMINOUS CONCRETE PAVEMENT TYPE 111S
18" SUBBASE OF DENSE GRADED CRUSHED STONE/OR SUBBASE OF CRUSHED GRAVEL, COARSE GRADED
12" SAND BORROW

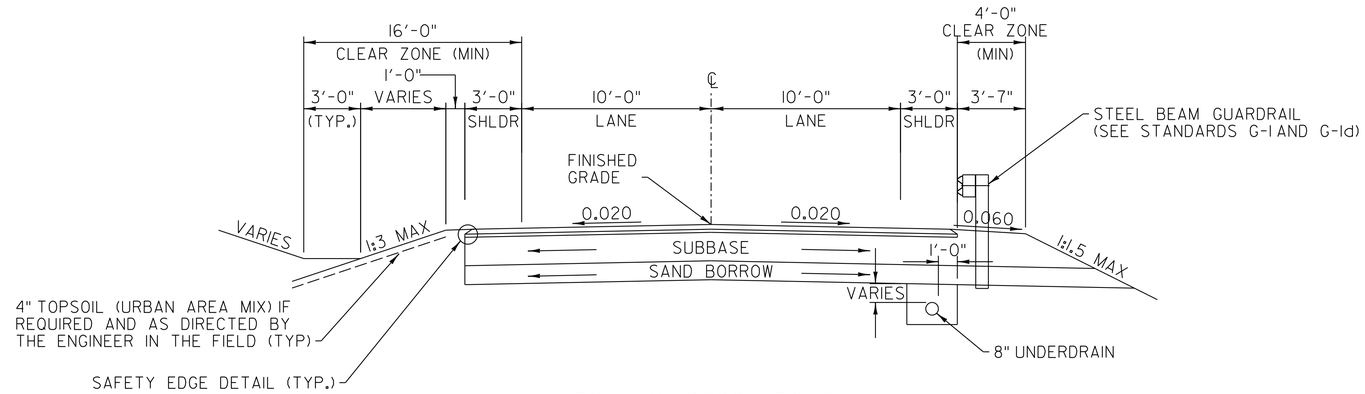

ROARING BROOK ROAD
NORMAL SECTION

SCALE: 1/4" = 1'-0"

3" BITUMINOUS CONCRETE PAVEMENT (2-1 1/2" LIFTS) (TYPE 1VS)
2" BITUMINOUS CONCRETE PAVEMENT TYPE 111S
18" SUBBASE OF DENSE GRADED CRUSHED STONE/OR SUBBASE OF CRUSHED GRAVEL, COARSE GRADED
12" SAND BORROW

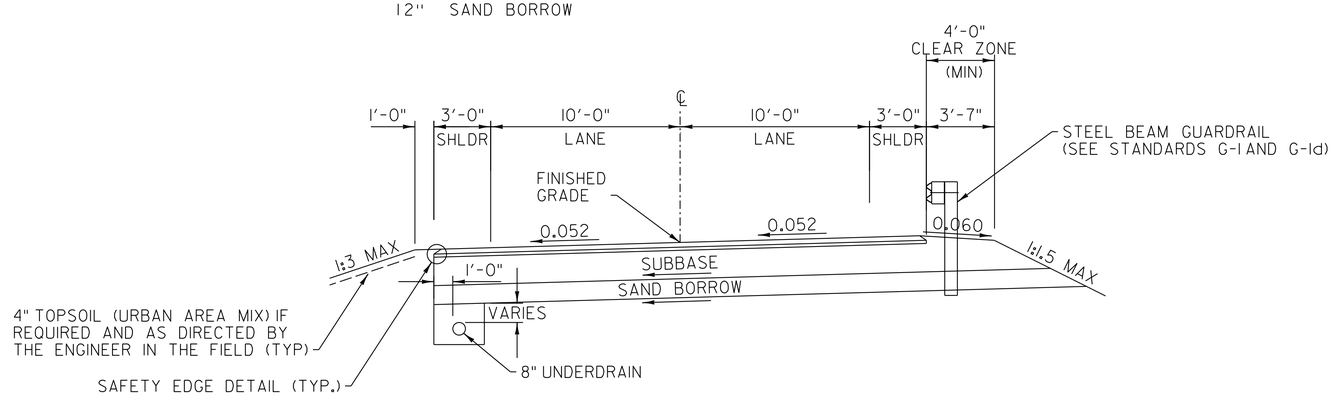

ROARING BROOK ROAD
MAXIMUM BANKED SECTION

SCALE: 1/4" = 1'-0"

CLD 12-0174 MODEL: TYP01

PROJECT NAME: BARTON	
PROJECT NUMBER: BRO 1449(31)	
FILE NAME: 11j068/cos/z11j068frm.dgn	PLOT DATE: 7/15/2014
PROJECT LEADER: J. BYATT	DRAWN BY: W. GORDON
DESIGNED BY: M. HALEY	CHECKED BY: P. SHEDD
TYPICAL ROADWAY SECTIONS SHEET 1	SHEET 4 OF 52

CONSULTING ENGINEERS

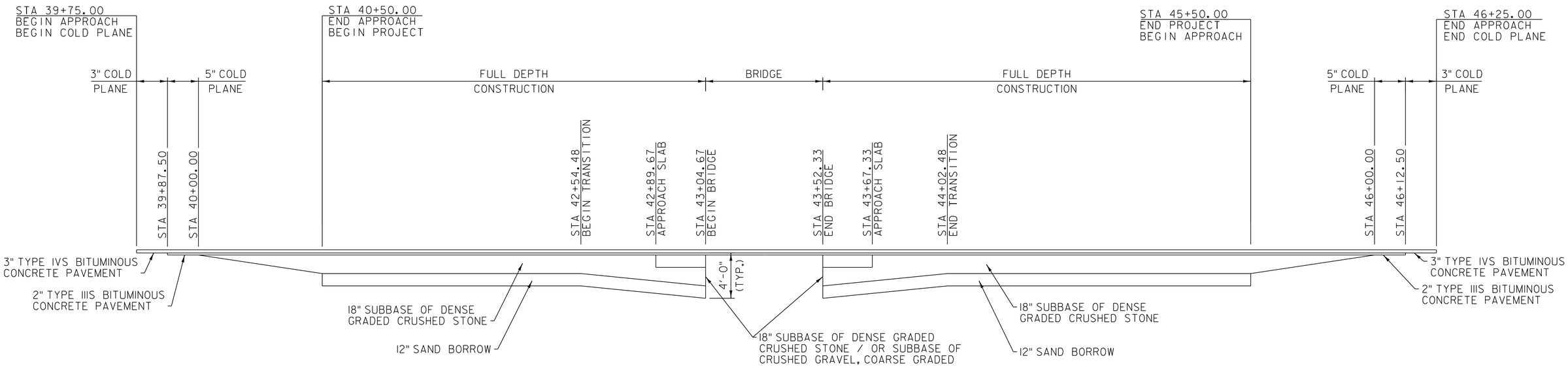

MATERIAL TRANSITION DIAGRAM

NOT TO SCALE

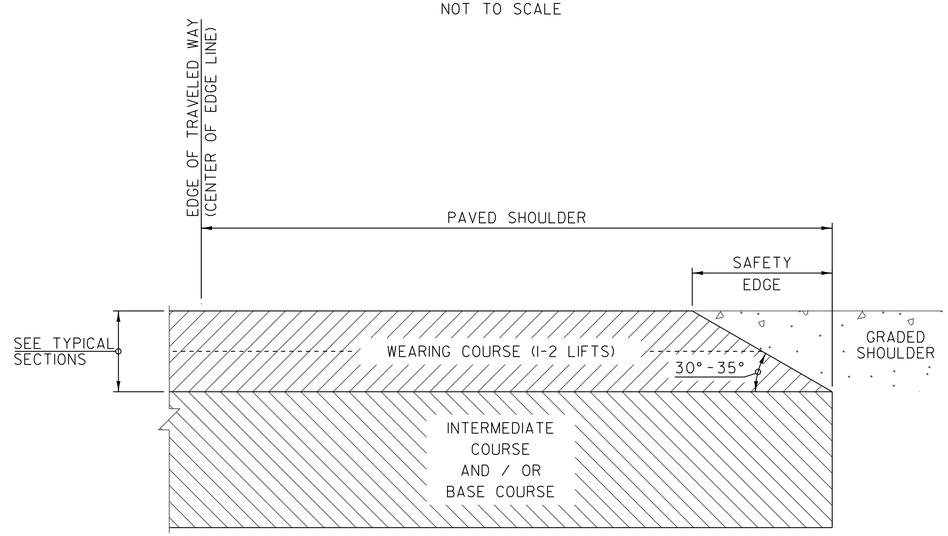

SAFETY EDGE DETAIL

SAFETY EDGE NOTES

1. LEVELING COURSE MAY INCLUDE THE "SAFETY EDGE" AT THE CONTRACTOR'S CHOICE.
2. THE EDGE OF PAVEMENT SHALL BE FORMED IN SUCH A WAY THAT THE BITUMINOUS CONCRETE PAVEMENT IS EXTRUDED OR COMPRESSED TO FORM THE 30 TO 35 DEGREE ANGLE. DEVICES THAT SIMPLY STRIKE-OFF THE MIX WITHOUT PROVIDING ANY COMPACTIVE EFFORT WILL NOT BE ALLOWED.
3. TO PAVED SHOULDER EXTENDS FROM THE EDGE OF TRAVELED WAY TO THE EDGE OF THE WEARING COURSE, INCLUDED THE "SAFETY EDGE".

PROJECT NAME: BARTON	
PROJECT NUMBER: BRO 1449(31)	
FILE NAME: 11j068/cos/z11j068frm.dgn	PLOT DATE: 7/15/2014
PROJECT LEADER: J. BYATT	DRAWN BY: S. GOODWIN
DESIGNED BY: M. HALEY	CHECKED BY: P. SHEDD
TYPICAL ROADWAY SECTIONS SHEET 2	SHEET 5 OF 52

CLD 12-0174 MODEL: TYP02

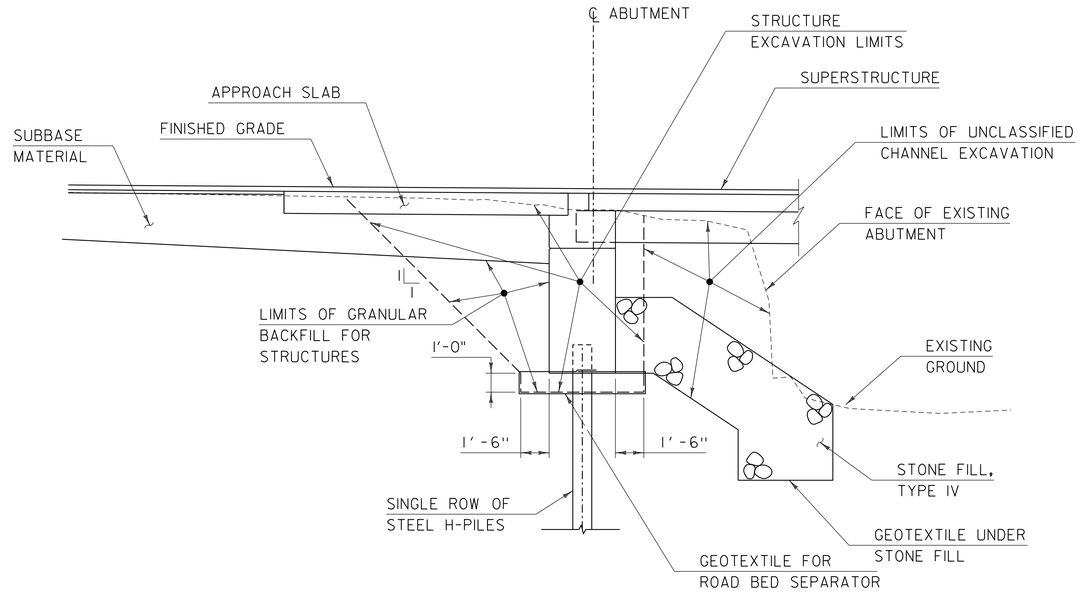

TYPICAL ABUTMENT EARTHWORKS SECTION

SCALE: 1/4" = 1'-0"

1. ACTUAL EXCAVATION LIMITS SHALL BE DETERMINED BY THE CONTRACTOR. HOWEVER, ONLY THE EXCAVATION BETWEEN THE LIMITS SHOWN WILL BE PAID FOR UNDER ITEM 204.25 "STRUCTURE EXCAVATION". ALL NECESSARY EXCAVATION OUTSIDE OF THESE LIMITS SHALL BE PAID FOR UNDER ITEM 203.27, "UNCLASSIFIED CHANNEL EXCAVATION".

2. USE A 12 INCH UNDERCUT TO PLACE A ONE FOOT LAYER OF GRANULAR BACKFILL FOR STRUCTURES WRAPPED IN GEOTEXTILE FOR ROAD BED SEPARATOR BELOW THE ABUTMENT.

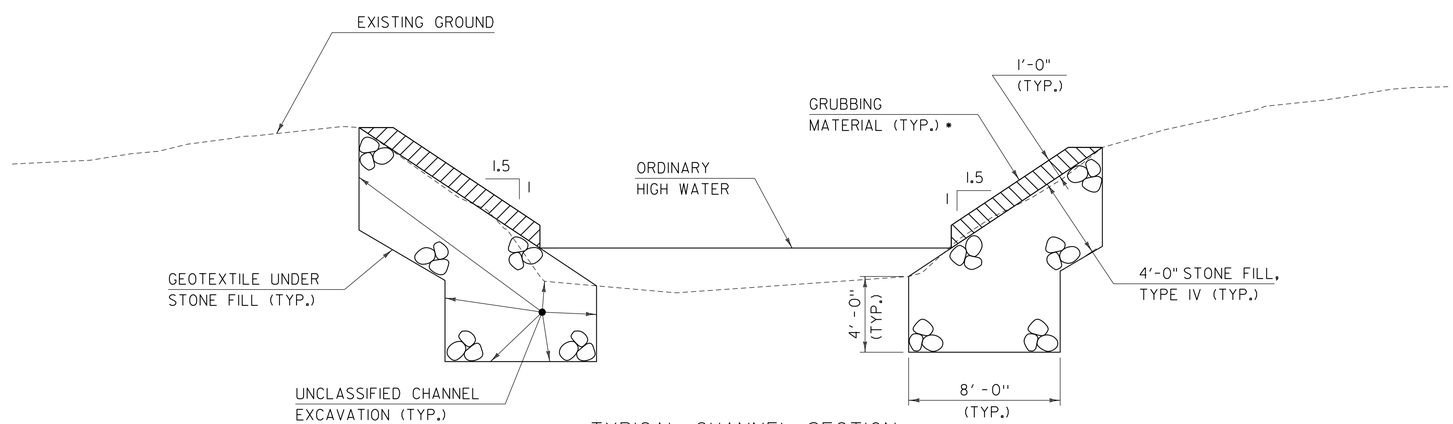

TYPICAL CHANNEL SECTION

SCALE: 1/4" = 1'-0"

* GRUBBING MATERIAL SHALL NOT BE PLACED ON THE STONE FILL IN THE AREA UNDER THE BRIDGE. WHENEVER CHANNEL SLOPE INTERSECTS ROADWAY SUBBASE, GRUBBING MATERIAL SHALL BEGIN AT THE BOTTOM OF SUBBASE.

PROJECT NAME: BARTON	
PROJECT NUMBER: BRO 1449(31)	
FILE NAME: 11j068/cos/z11j068sub.dgn	PLOT DATE: 7/15/2014
PROJECT LEADER: J. BYATT	DRAWN BY: M. SMITH
DESIGNED BY: S. BEAUMONT	CHECKED BY: J. BYATT
TYPICAL EARTHWORK SECTIONS	SHEET 6 OF 52

CLD 12-0174 MODEL: SUB01

GENERAL

1. ALL MATERIALS AND CONSTRUCTION SHALL CONFORM TO THE STATE OF VERMONT AGENCY OF TRANSPORTATION STANDARD SPECIFICATIONS FOR CONSTRUCTION DATED 2011, AND ITS LATEST REVISIONS, AND THE AASHTO LRFD BRIDGE DESIGN SPECIFICATIONS, DATED 2012, AND ITS LATEST REVISIONS.

2. ALL PRECAST CONCRETE ELEMENTS TO BE FABRICATED TO THE SPECIFIED DIMENSIONS WITHIN THE TOLERANCES DICTATED IN THE PRECAST/PRESTRESSED CONCRETE INSTITUTE TOLERANCE MANUAL FOR PRECAST AND PRESTRESSED CONCRETE CONSTRUCTION, MNL 135-00, AND ITS LATEST REVISIONS.

3. ALL DIMENSIONS SHOWN IN THE PLANS ARE HORIZONTAL AND VERTICAL AND ARE GIVEN AT 68 DEGREES FAHRENHEIT, UNLESS NOTED OTHERWISE.

4. THE CONTRACTOR SHALL BE MADE AWARE THAT EXISTING UTILITIES ARE WITHIN THE CONSTRUCTION LIMITS OF BRIDGE 8. THE UTILITIES WILL BE RELOCATED BY OTHERS PRIOR TO THE START OF CONSTRUCTION. THE LOCATION OF ANY UTILITY INFORMATION SHOWN ON THE PLANS IS APPROXIMATE. NO CLAIMS ARE MADE AS TO THE ACCURACY OR COMPLETENESS OF THE UTILITIES SHOWN. THE CONTRACTOR IS SOLELY RESPONSIBLE FOR LOCATING AND PROTECTING FROM DAMAGE ALL UTILITIES ON SITE DURING ALL STAGES OF CONSTRUCTION. SEE SPECIAL PROVISIONS FOR ADDITIONAL INFORMATION AND REQUIREMENTS.

5. NO SUBSTITUTION FOR PRECAST CONCRETE WILL BE PERMITTED. SEE SPECIAL PROVISIONS FOR ADDITIONAL INFORMATION AND REQUIREMENTS.

6. THE CONTRACTOR SHALL REVIEW AND UNDERSTAND ALL APPLICABLE ENVIRONMENTAL PERMITS AND ENSURE THAT ALL CONSTRUCTION CONDITIONS ARE MET.

7. ALL PG BINDER USED IN BITUMINOUS CONCRETE PAVEMENT SHALL BE IN ACCORDANCE WITH SUBSECTION 409.03b.

8. EMULSIFIED ASPHALT SHALL BE APPLIED ON ALL COLD PLANED SURFACES AT THE RATE OF 0.080 GAL/SY AND BETWEEN ALL COURSES OF PAVEMENT AT THE RATE OF 0.040 GAL/SY OR AS DIRECTED BY THE ENGINEER.

9. ANY REQUIRED SAWCUT OF EXISTING PAVEMENT SHALL BE INCIDENTAL TO THE WEARING COURSE PAY ITEM.

10. THE CONTRACTOR SHALL BE RESPONSIBLE FOR REPAIRING ANY DAMAGE TO PRIVATE OR PUBLIC PROPERTY CAUSED BY THE CONTRACTOR AT THE CONTRACTOR'S EXPENSE AND TO THE SATISFACTION OF THE ENGINEER.

11. SLOPE ROUNDING: ALL CUT SLOPES TO BE ROUNDED IN ACCORDANCE WITH STANDARD SHEET B-5.

EARTHWORK

12. REMOVAL OF THE EXISTING STRUCTURE SHALL BE UNDER ITEM 529.15, "REMOVAL OF STRUCTURE". THIS WORK SHALL INCLUDE REMOVAL OF ANY PORTIONS OF THE EXISTING STRUCTURE, INCLUDING THE SUPERSTRUCTURE, ABUTMENTS, RETAINING WALLS, WINGWALLS, AND BRIDGE RAIL THAT FALL OUTSIDE THE LIMITS OF STRUCTURE EXCAVATION OR UNCLASSIFIED CHANNEL EXCAVATION.

13. THE "STONE FILL, TYPE IV" UNDER THE BRIDGE AS SHOWN IN THE PLANS SHALL BE PLACED BEFORE THE NEW BEAMS ARE SET.

CONCRETE AND REINFORCING STEEL

14. ITEM 514.10, "WATER REPELLENT, SILANE", SHALL BE APPLIED TO ALL EXPOSED CONCRETE ON THE BRIDGE SUPERSTRUCTURE AND SUBSTRUCTURE WITH THE EXCEPTION OF THE BOTTOM OF THE PRECAST NEXT BEAMS BETWEEN DRIP NOTCHES.

15. ALL CONCRETE PLACED INTEGRALLY WITH THE SUPERSTRUCTURE SHALL BE ITEM 900.608, "SPECIAL PROVISION (HIGH PERFORMANCE CONCRETE, RAPID SET)".

16. ALL PRECAST SUBSTRUCTURE CONCRETE SHALL MEET THE REQUIREMENTS OF 540 - PRECAST CONCRETE OR SPECIAL PROVISION (CONTRACTOR-FABRICATED PRECAST CONCRETE STRUCTURES).

17. CAST-IN-PLACE CONCRETE FOR THE CURBS SHALL BE ITEM 181.33, "CONCRETE, HIGH PERFORMANCE CLASS A".

18. ALL REINFORCING STEEL SHALL BE DETAILED AND FABRICATED USING PROCEDURES AND TOLERANCES IN ACCORDANCE WITH APPLICABLE PUBLICATIONS OF THE "CONCRETE REINFORCING STEEL INSTITUTE".

19. PAYMENT FOR REINFORCING STEEL IN PRECAST OR PRESTRESSED COMPONENTS WILL BE INCLUDED IN THE UNIT BID PRICE FOR THE APPROPRIATE PRECAST OR PRESTRESSED CONCRETE CONTRACT ITEM. ALL REINFORCING STEEL NOT PLACED WITH PRECAST OR PRESTRESSED COMPONENTS SHALL BE PAID FOR UNDER ITEM 507.11, "REINFORCING STEEL, LEVEL 1" OR ITEM 507.12, "REINFORCING STEEL, LEVEL 11", AS APPROPRIATE.

20. ALL REINFORCING STEEL IN THE ABUTMENTS SHALL MEET THE REQUIREMENTS FOR REINFORCING STEEL, LEVEL 1.

21. ALL REINFORCING STEEL IN THE APPROACH SLABS SHALL MEET THE REQUIREMENTS FOR REINFORCING STEEL, LEVEL 1, EPOXY COATED.

22. ALL REINFORCING STEEL IN THE NEXT BEAMS, BEAM-END CLOSURE POUR, AND BRIDGE CURBS SHALL MEET THE REQUIREMENTS FOR REINFORCING STEEL, LEVEL 11.

23. MINIMUM CLEAR COVER FOR REINFORCING STEEL SHALL BE AS FOLLOWS:

ALONG BACK FACES OF WALLS AGAINST EARTH:	2.00 INCHES
ALONG TOP SURFACE OF DECK SLAB:	2.50 INCHES
ALONG BOTTOM SURFACE OF DECK SLAB:	1.75 INCHES
BEAM-END CLOSURE POUR:	2.00 INCHES
ELSEWHERE UNLESS OTHERWISE INDICATED:	3.00 INCHES

24. TEST BARS SHALL BE PROVIDED IN ACCORDANCE WITH THE "VERMONT AGENCY OF TRANSPORTATION MATERIALS SAMPLING MANUAL".

PRECAST ABUTMENTS AND POST-TENSIONING

25. IF VERTICAL CONSTRUCTION JOINTS ARE REQUIRED BY THE CONTRACTOR FOR SHIPPING OF THE ABUTMENTS THEN THE SECTIONS SHALL BE KEYED AND MATCH CAST. A JOINT DETAIL SHALL BE SHOWN ON THE FABRICATION DRAWINGS.

26. POST-TENSIONING AND ASSOCIATED ITEMS ARE ONLY REQUIRED IF THE PRECAST ABUTMENT IS CONSTRUCTED OF MORE THAN ONE UNIT. ANY POST-TENSIONING STRANDS AND CONDUIT SHALL ADHERE TO THE REQUIREMENTS OF SECTION 510 - PRESTRESSED CONCRETE. GALVANIZED ANCHOR ASSEMBLIES, CONDUIT, AND POST-TENSIONING STRANDS SHALL BE INCLUDED UNDER ITEM 900.645, "SPECIAL PROVISION (CONTRACTOR-FABRICATED PRECAST CONCRETE STRUCTURES (ABUTMENT #1)" OR ITEM 900.645, "SPECIAL PROVISION (CONTRACTOR-FABRICATED PRECAST CONCRETE STRUCTURES (ABUTMENT #2)" AS APPROPRIATE. POST-TENSIONING STRANDS SHALL BE COVERED WITH SEAMLESS POLYPROPYLENE SHEATH (WITH CORROSION INHIBITOR GREASE BETWEEN SHEATH AND STRAND) FOR THE LENGTH OF THE STRAND, EXCEPT AT ANCHORAGE LOCATIONS.

27. GALVANIZE ANCHOR ASSEMBLIES AFTER FABRICATION ACCORDING TO AASHTO M232M/M232.

28. DESIGN VALUES:
    A. CONCRETE COMPRESSIVE STRENGTH: f`c= 5,000 PSI.
    B. POST-TENSIONING STRANDS: 0.5 INCH DIAMETER, 270 KSI, LOW RELAXATION 7-WIRE STRANDS.
    C. ASSUMED MODULUS OF ELASTICITY IS 28,500 KSI.
    D. THERE SHALL BE TWO STRANDS PER CONDUIT.
    E. JACKING FORCE PER STRAND: 32 KIPS

29. THE CONCRETE FOR THE ABUTMENT #1 AND ABUTMENT #2 PILE CAVITIES SHALL MEET THE REQUIREMENTS OF ITEM 900.608, "SPECIAL PROVISION (HIGH PERFORMANCE CONCRETE, RAPID SET)".

30. THE CORRUGATED STEEL PIPE SHALL BE TYPE 1 AND SHALL MEET THE REQUIREMENTS OF SUBSECTION 711.01 AND AASHTO M289. ALL COSTS ASSOCIATED WITH PLACING THE CORRUGATED STEEL PIPE SHALL BE INCLUDED IN ITEM 900.645, "SPECIAL PROVISION (CONTRACTOR-FABRICATED PRECAST CONCRETE STRUCTURES (ABUTMENT #1)" OR ITEM 900.645, "SPECIAL PROVISION (CONTRACTOR-FABRICATED PRECAST CONCRETE STRUCTURES (ABUTMENT #2)", AS APPROPRIATE.

31. PROPOSED SEQUENCE OF CONSTRUCTION:
    A. PREPARE AND GRADE FOUNDATION TO REQUIRED ELEVATION.
    B. DRIVE PILES.
    C. PLACE GEOTEXTILE FOR ROADBED SEPARATOR UNDER ABUTMENTS, BACKFILL TO BOTTOM OF ABUTMENT ELEVATION, AND WRAP GEOTEXTILE FOR ROADBED SEPARATOR OVER THE BACKFILL.
    D. PLACE PRECAST ABUTMENTS AND INSTALL TRANSVERSE STRANDS (IF MORE THAN ONE UNIT IS USED)
    E. APPLY EPOXY BONDING COMPOUND TO MATCH CAST FACES OF VERTICAL CONSTRUCTION JOINT.
    F. USE A CALIBRATED JACK TO TENSION TO 3 KIPS TO REMOVE SAG IN STRANDS.
    G. CHECK ALIGNMENT OF PRECAST ABUTMENT ELEMENTS.
    H. STRESS POST-TENSIONING STRANDS USING A CALIBRATED JACK.
    I. FILL PILE CAVITIES WITH ITEM 900.608, "SPECIAL PROVISION (HIGH PERFORMANCE CONCRETE, RAPID SET)".
    J. BACKFILL MAY BE COMPLETED AFTER SPLICE CONNECTOR GROUT HAS REACHED 85% OF 5,000 PSI.

32. ALTERNATE SEQUENCE OF CONSTRUCTION MAY BE SUBMITTED TO THE VTRANS PROJECT MANAGER FOR APPROVAL.

NEXT D BEAMS

33. NEXT D BEAMS ARE A NON-PROPRIETARY SHAPE DEVELOPED BY PCI NORTHEAST (PCINE). STANDARDIZED SECTION PROPERTIES AND DETAILS MAY BE FOUND AT http://www.pcine.org.

34. DESIGN VALUES:
    A. CONCRETE DESIGN COMPRESSIVE STRENGTH: f`c = 6,000 PSI.
    B. CONCRETE COMPRESSIVE STRENGTH AT RELEASE: f`ci = 4,000 PSI.
    C. PRESTRESSING STRANDS: 0.6 INCH DIAMETER, 270 KSI, LOW-RELAXATION 7-WIRE STRANDS.
    D. ASSUMED MODULUS OF ELASTICITY: 28,500 KSI.
    E. THE JACKING FORCE PER STRAND: 44 KIPS.
    F. SERVICE LOADS:

MEMBER MOMENT	638.1 K-FT
SUPERIMPOSED DEAD LOAD MOMENT	111.8 K-FT
LIVE LOAD AND IMPACT MOMENT	802.8 K-FT
DEAD LOAD REACTION	68.1 KIPS
LIVE LOAD AND IMPACT REACTION	63.4 KIPS
TOTAL REACTION	131.5 KIPS
CAMBER AT RELEASE	11/16 INCHES
ERECTION CAMBER	1 1/8 INCHES
FINAL/RESIDUAL CAMBER	1 1/4 INCHES

DIMENSION TOLERANCES SHOULD BE INCLUDED IN FABRICATION DRAWINGS.

35. ENDS OF FLANGES IN CONTACT WITH GROUT SHALL BE SANDBLASTED PRIOR TO DELIVERY AND POWER WASHED WITH WATER PRIOR TO ERECTION OF THE BEAMS.

36. FILL THE FLANGE TO FLANGE CONNECTION WITH ITEM 900.608, "SPECIAL PROVISION (HIGH PERFORMANCE CONCRETE, RAPID SET)".

37. METHOD OF FORMING FLANGE CONNECTION SHALL BE DETERMINED BY THE CONTRACTOR. THE FORMS SHALL BE REMOVABLE AND ABLE TO ACCOMMODATE DIFFERENTIAL CAMBER. FORM SUPPORTS SHALL NOT PENETRATE THROUGH THE TOP OF POUR UNLESS APPROVED BY THE ENGINEER. THE CONTRACTOR SHALL NOT DRILL INTO NEXT BEAMS.

38. THE FABRICATOR MAY ALTER THE DESIGN AS DETAILED IN THESE PLANS TO ACCOMMODATE THE FABRICATOR'S SPECIFIC OPERATION. THIS ALTERATION MUST BE DESIGNED BY A PROFESSIONAL ENGINEER LICENSED IN THE STATE OF VERMONT, MEET THE ABOVE CRITERIA, AND SHALL BE APPROVED BY THE PROJECT MANAGER.

39. PROPOSED SEQUENCE OF CONSTRUCTION:
    A. LAY OUT WORKING LINES THE ENTIRE WIDTH OF THE BRIDGE ALONG CENTERLINE OF BEARING, MEASURED FROM A SINGLE WORKING POINT. THE WORKING LINES SHALL BE BASED ON THE NOMINAL BEAM WIDTHS.
    B. VERIFY THE BEAM SEAT ELEVATIONS AND TAKE CORRECTIVE ACTION IF NECESSARY.
    C. INSTALL BEARINGS.
    D. ERECT THE BEAMS TO FIT WITHIN THE WORKING LINES.
    E. ADJUST BEAMS TO FIT SNUG AGAINST 1/2" CORK ON INTERIOR OF CHEEK WALLS.
    F. CONSTRUCT FORMS FOR THE FLANGE CONNECTION POUR AND BEAM-END CLOSURE POUR.
    G. GROUT CONNECTIONS BETWEEN BEAM FLANGES AND CURE.
    H. COMPLETE BEAM-END CLOSURE POUR TO TOP OF DECK.

40. ALTERNATE SEQUENCE OF CONSTRUCTION MAY BE SUBMITTED TO THE VTRANS PROJECT MANAGER FOR APPROVAL.

H-PILES

41. TO PREVENT DAMAGE TO THE PILES, PILE SHOES ARE REQUIRED AND SHALL CONFORM TO SUBSECTION 505.04(f).

42. THE TOPS OF THE PILES AFTER DRIVING SHALL NOT VARY FROM THE POSITION SHOWN ON THE PLANS BY MORE THAN THREE INCHES. THE PILE ORIENTATION SHALL NOT VARY BY MORE THAN FIVE DEGREES. THE CONTRACTOR SHALL DEMONSTRATE TO THE SATISFACTION OF THE ENGINEER HOW THE TOLERANCES WILL BE MET. THESE MEASURES SHALL BE DEMONSTRATED IN A SUBMITTAL TO BE ACCEPTED BEFORE PILE DRIVING COMMENCES.

43. THE PILES SHALL BE DRIVEN TO A NOMINAL PILE DRIVING RESISTANCE (RNDR) OF 218 KIPS, AS DETERMINED BY THE RESULTS OF DYNAMIC TESTING, AND AS INTERPRETED BY THE ENGINEER. HOWEVER, THE PILES SHALL BE DRIVEN TO A MINIMUM DEPTH OF 24 FEET BELOW THE BOTTOM OF THE PRECAST ABUTMENT.

44. TO ENSURE THAT THE NOMINAL CAPACITY HAS BEEN ATTAINED AND TO PREVENT THE OVERSTRESSING OF THE PILES DURING DRIVING OPERATIONS, DYNAMIC TESTING SHALL BE PERFORMED IN ACCORDANCE WITH SUBSECTION 505.04. A MINIMUM OF ONE DYNAMIC PILE TEST SHALL BE CONDUCTED ON THE FIRST PILE DRIVEN FOR EACH SUBSTRUCTURE UNIT, FOR A TOTAL OF TWO TESTS. MORE TESTS MAY BE ORDERED BY THE ENGINEER. ADDITIONAL TEST(S) ORDERED BY THE ENGINEER WILL BE PAID FOR AT THE UNIT PRICE BID FOR CONTRACT ITEM 505.45.

45. STRESSES IN THE PILE DURING DRIVING SHALL NOT EXCEED THE MAXIMUM DRIVING STRESS. THE MAXIMUM DRIVING STRESS SHALL BE DETERMINED AS 90 PERCENT OF THE PILE STEEL STRENGTH MULTIPLIED BY A RESISTANCE FACTOR OF 1.00.

46. FOR ESTIMATING PURPOSES, THE PILE TIP ELEVATIONS WERE ASSUMED TO BE AS SHOWN ON THE BORING LOGS. THE ACTUAL IN PLACE LENGTH MAY VARY.

STATE OF VERMONT
AGENCY OF TRANSPORTATION

QUANTITY SHEET 1

SUMMARY OF ESTIMATED QUANTITIES

ROADWAY	EROSION CONTROL	BRIDGE NO. 8	FULL C.E. ITEMS	GRAND TOTAL	FINAL	UNIT	ITEMS	ITEM NUMBER	ROUND
1				1		LS	CLEARING AND GRUBBING, INCLUDING INDIVIDUAL TREES AND STUMPS	201.10	-
1540				1540		CY	COMMON EXCAVATION	203.15	14.8
		356		356		CY	UNCLASSIFIED CHANNEL EXCAVATION	203.27	0.8
530				530		CY	SAND BORROW	203.31	2.2
1				1		CY	TRENCH EXCAVATION OF EARTH, EXPLORATORY (N.A.B.I.)	204.22	-
		332		332		CY	STRUCTURE EXCAVATION	204.25	0.9
		119		119		CY	GRANULAR BACKFILL FOR STRUCTURES	204.30	0.4
200				200		SY	COLD PLANING, BITUMINOUS PAVEMENT	210.10	6.2
20				20		CY	SUBBASE OF GRAVEL	301.15	2.8
875				875		CY	SUBBASE OF DENSE GRADED CRUSHED STONE	301.35	7
1				1		CY	AGGREGATE SURFACE COURSE	401.10	0.2
7				7		CWT	EMULSIFIED ASPHALT	404.65	0.4
		5		5		CY	CONCRETE, HIGH PERFORMANCE CLASS A	501.33	0.7
		1		1		LS	FURNISHING EQUIPMENT FOR DRIVING PILING	504.10	-
		858		858		LF	STEEL PILING, HP 12 X 63	505.155	-
		2		2		EACH	DYNAMIC PILE LOADING TEST	505.45	-
		368		368		LB	REINFORCING STEEL, LEVEL I	507.11	0.9
		3268		3268		LB	REINFORCING STEEL, LEVEL II	507.12	2.6
		8		8		GAL	WATER REPELLENT, SILANE	514.10	2.1
		50		50		LF	BRIDGE EXPANSION JOINT, ASPHALTIC PLUG	516.10	-
		133		133		SY	SHEET MEMBRANE WATERPROOFING, TORCH APPLIED	519.20	0.6
		50		50		LF	JOINT SEALER, HOT POURED	524.11	-
		100		100		LF	BRIDGE RAILING, GALVANIZED 2 RAIL BOX BEAM	525.33	0.7
		1		1		EACH	REMOVAL OF STRUCTURE (625 SF - EST.)	529.15	-
		12		12		EACH	BEARING DEVICE ASSEMBLY, STEEL REINFORCED ELASTOMERIC PAD	531.17	-
							BEGIN OPTION AA		
		1		1		LS	PRECAST CONCRETE STRUCTURE (ABUTMENT #1)	540.10	
		1		1		LS	SPECIAL PROVISION (CONTRACTOR-FABRICATED PRECAST CONCRETE STRUCTURES (ABUTMENT #1)	900.645	
							END OPTION AA		
							BEGIN OPTION BB		
		1		1		LS	PRECAST CONCRETE STRUCTURE (ABUTMENT #2)	540.10	
		1		1		LS	SPECIAL PROVISION (CONTRACTOR-FABRICATED PRECAST CONCRETE STRUCTURES (ABUTMENT #2)	900.645	
							END OPTION BB		
							BEGIN OPTION CC		
		1		1		LS	PRECAST CONCRETE STRUCTURE (APPROACH SLAB #1)	540.10	
		1		1		LS	SPECIAL PROVISION (CONTRACTOR-FABRICATED PRECAST CONCRETE STRUCTURES (APPROACH SLAB #1)	900.645	
							END OPTION CC		

DETAILED SUMMARY OF QUANTITIES

QUANTITIES	UNIT	ITEMS
		EARTHWORK SUMMARY
1540	CY	COMMON EXCAVATION
356	CY	UNCLASSIFIED CHANNEL EXCAVATION
332	CY	STRUCTURE EXCAVATION
2228	CY	TOTAL FILL AVAILABLE
22	CY	TOTAL FILL REQUIRED (INCLUDING 1.15 FILL FACTOR)
2206	CY	TOTAL WASTE

PROJECT NAME: BARTON
PROJECT NUMBER: BRO 1449(31)

FILE NAME: 11J068/cos/z11J068frm.dgn
PROJECT LEADER: J. BYATT
DESIGNED BY: M. HALEY
QUANTITY SHEET 1

PLOT DATE: 7/15/2014
DRAWN BY: S. GOODWIN
CHECKED BY: P. SHEDD
SHEET 9 OF 52

STATE OF VERMONT
AGENCY OF TRANSPORTATION

QUANTITY SHEET 2

SUMMARY OF ESTIMATED QUANTITIES				TOTALS		DESCRIPTIONS			
ROADWAY	EROSION CONTROL	BRIDGE NO. 8	FULL C.E. ITEMS	GRAND TOTAL	FINAL	UNIT	ITEMS	ITEM NUMBER	ROUND
							BEGIN OPTION DD		
		1		1		LS	PRECAST CONCRETE STRUCTURE (APPROACH SLAB #2)	540.10	
		1		1		LS	SPECIAL PROVISION (CONTRACTOR-FABRICATED PRECAST CONCRETE STRUCTURES (APPROACH SLAB #2)	900.645	
							END OPTION DD		
250				250		LF	8 INCH UNDERDRAIN PIPE	605.11	1
2				2		EACH	UNDERDRAIN FLUSHING BASIN	605.95	-
35				35		HR	ALL PURPOSE EXCAVATOR RENTAL, TYPE I	608.25	EST.
90				90		CY	STONE FILL, TYPE II	613.11	5
		297		297		CY	STONE FILL, TYPE IV	613.13	0.8
		130		130		LF	CAST-IN-PLACE CONCRETE CURB, TYPE B	616.28	0.3
1				1		EACH	RELOCATE MAILBOX, SINGLE SUPPORT	617.10	-
175				175		LF	STEEL BEAM GUARDRAIL, GALVANIZED	621.20	6.5
4				4		EACH	ANCHOR FOR STEEL BEAM RAIL	621.60	-
		4		4		EACH	GUARDRAIL APPROACH SECTION, GALVANIZED 2 RAIL BOX BEAM	621.72	-
75				75		LF	REMOVAL AND DISPOSAL OF GUARDRAIL	621.80	2
40				40		LF	TEMPORARY TRAFFIC BARRIER	621.90	-
			1	1		LS	FIELD OFFICE, ENGINEERS	631.10	-
			1	1		LS	TESTING EQUIPMENT, CONCRETE	631.16	-
			1	1		LS	TESTING EQUIPMENT, BITUMINOUS	631.17	-
			3000	3000		DL	FIELD OFFICE TELEPHONE (N.A.B.I.)	631.26	-
1				1		LS	MOBILIZATION/DEMOBILIZATION	635.11	-
1				1		LS	TRAFFIC CONTROL	641.10	-
1300				1300		LF	DURABLE 4 INCH WHITE LINE, POLYUREA	646.404	-
1300				1300		LF	DURABLE 4 INCH YELLOW LINE, POLYUREA	646.414	-
1300				1300		LF	TEMPORARY 4 INCH WHITE LINE, PAINT	646.602	-
1300				1300		LF	TEMPORARY 4 INCH YELLOW LINE, PAINT	646.612	-
90				90		EACH	LINE STRIPING TARGETS	646.76	6
		198		198		SY	GEOTEXTILE FOR ROADBED SEPARATOR	649.11	-
180		355		535		SY	GEOTEXTILE UNDER STONE FILL	649.31	4.3
65				65		CY	TOPSOIL	651.35	-
30		81		111		SY	GRUBBING MATERIAL	651.40	1.6
1220				1220		LF	PROJECT DEMARCATION FENCE	653.55	3
18				18		SF	TRAFFIC SIGNS, TYPE A	675.20	0.16
50				50		LF	SQUARE TUBE SIGN POST AND ANCHOR	675.341	-
7				7		EACH	REMOVING SIGNS	675.50	-
2				2		EACH	ERECTING SALVAGED SIGNS	675.60	-
1				1		EACH	SETTING SALVAGED POSTS	675.61	-
4				4		EACH	DELINEATOR WITH STEEL POST	676.10	-
1				1		EACH	REMOVAL OF EXISTING DELINEATOR	676.12	-
		39		39		CY	SPECIAL PROVISION (HIGH PERFORMANCE CONCRETE, RAPID SET) (FPQ)	900.608	2.8

DETAILED SUMMARY OF QUANTITIES		
QUANTITIES	UNIT	ITEMS

PROJECT NAME: BARTON
PROJECT NUMBER: BRO 1449(31)

FILE NAME: 11J068/cos/z11J068frm.dgn
PROJECT LEADER: J. BYATT
DESIGNED BY: M. HALEY
QUANTITY SHEET 2

PLOT DATE: 7/15/2014
DRAWN BY: S. GOODWIN
CHECKED BY: P. SHEDD
SHEET 10 OF 52

CONSULTING ENGINEERS

STATE OF VERMONT
AGENCY OF TRANSPORTATION

QUANTITY SHEET 3

SUMMARY OF ESTIMATED QUANTITIES / TOTALS / DESCRIPTIONS

ROADWAY	EROSION CONTROL	BRIDGE NO. 8	FULL C.E. ITEMS	GRAND TOTAL	FINAL	UNIT	ITEMS	ITEM NUMBER	ROUND
	5000			5000		DL	SPECIAL PROVISION (EROSION PREVENTION AND SEDIMENT CONTROL MEASURES) (N.A.B.I.)	900.615	-
	1000			1000		DL	SPECIAL PROVISION (MAINTENANCE OF EPSC PLAN) (N.A.B.I.)	900.615	-
	40			40		HR	SPECIAL PROVISION (MONITORING EPSC PLAN)	900.630	-
		140		140		LF	SPECIAL PROVISION (PRESTRESSED CONCRETE NEXT D BEAMS) (NEXT 32 D)	900.640	-
	1			1		LS	SPECIAL PROVISION (EPSC PLAN)	900.645	-
			1	1		LU	SPECIAL PROVISION (INCENTIVE/DISINCENTIVE) (N.A.B.I.)	900.650	-
1				1		LU	SPECIAL PROVISION (MAT DENSITY PAY ADJUSTMENT, SMALL QUANTITY) (N.A.B.I.)	900.650	-
1				1		LU	SPECIAL PROVISION (MIXTURE PAY ADJUSTMENT) (N.A.B.I.)	900.650	-
65				65		SY	SPECIAL PROVISION (HAND-PLACED BITUMINOUS CONCRETE MATERIAL, DRIVES)	900.675	2
520				520		TON	SPECIAL PROVISION (BITUMINOUS CONCRETE PAVEMENT, SMALL QUANTITY)	900.680	6

DETAILED SUMMARY OF QUANTITIES

SPECIAL PROVISION (BITUMINOUS CONCRETE PAVEMENT, SMALL QUANTITY)

QUANTITIES	UNIT	ITEMS
192	TON	TYPE IIIS
322	TON	TYPE IVS
514	TON	SUBTOTAL
6	TON	ROUNDING
520	TON	TOTAL

PROJECT NAME: BARTON
PROJECT NUMBER: BRO 1449(31)

FILE NAME: 11j068/cos/z11j068frm.dgn
PROJECT LEADER: J. BYATT
DESIGNED BY: M. HALEY
QUANTITY SHEET 3

PLOT DATE: 7/15/2014
DRAWN BY: S. GOODWIN
CHECKED BY: P. SHEDD
SHEET 11 OF 52

STATE OF VERMONT
AGENCY OF TRANSPORTATION

BRIDGE QUANTITY SHEET 1

SUMMARY OF BRIDGE QUANTITIES				TOTALS	DESCRIPTIONS			DETAILED SUMMARY OF QUANTITIES		
APPROACH SLAB #1	APPROACH SLAB #2	ABUTMENT #1	ABUTMENT #2	SUPER-STRUCTURE	BRIDGE TOTAL	UNIT	ITEMS	ITEM NUMBER	QUANTITIES	UNIT	ITEMS
		184	172		356	CY	UNCLASSIFIED CHANNEL EXCAVATION	203.27			
		170	162		332	CY	STRUCTURE EXCAVATION	204.25			
		57	62		119	CY	GRANULAR BACKFILL FOR STRUCTURES	204.30			
				5	5	CY	CONCRETE, HIGH PERFORMANCE CLASS A	501.33			
		0.5	0.5		1	LS	FURNISHING EQUIPMENT FOR DRIVING PILING	504.10			
		432	426		858	LF	STEEL PILING, HP 12 X 63	505.155			
		1	1		2	EACH	DYNAMIC PILE LOADING TEST	505.45			
				368	368	LB	REINFORCING STEEL, LEVEL I	507.11			
		1244	1244	780	3268	LB	REINFORCING STEEL, LEVEL II	507.12			
		3	3	2	8	GAL	WATER REPELLENT, SILANE	514.10			
		25	25		50	LF	BRIDGE EXPANSION JOINT, ASPHALTIC PLUG	516.10			
				133	133	SY	SHEET MEMBRANE WATERPROOFING, TORCH APPLIED	519.20			
		25	25		50	LF	JOINT SEALER, HOT POURED	524.11			
				100	100	LF	BRIDGE RAILING, GALVANIZED 2 RAIL BOX BEAM	525.33			
				1	1	EACH	REMOVAL OF STRUCTURE (625 SF - EST.)	529.15			
				12	12	EACH	BEARING DEVICE ASSEMBLY, STEEL REINFORCED ELASTOMERIC PAD	531.17			
							BEGIN OPTION AA				
		1			1	LS	PRECAST CONCRETE STRUCTURE (ABUTMENT #1)	540.10			
		1			1	LS	SPECIAL PROVISION (CONTRACTOR-FABRICATED PRECAST CONCRETE STRUCTURES (ABUTMENT #1)	900.645			
							END OPTION AA				
							BEGIN OPTION BB				
			1		1	LS	PRECAST CONCRETE STRUCTURE (ABUTMENT #2)	540.10			
			1		1	LS	SPECIAL PROVISION (CONTRACTOR-FABRICATED PRECAST CONCRETE STRUCTURES (ABUTMENT #2)	900.645			
							END OPTION BB				
							BEGIN OPTION CC				
1					1	LS	PRECAST CONCRETE STRUCTURE (APPROACH SLAB #1)	540.10			
1					1	LS	SPECIAL PROVISION (CONTRACTOR-FABRICATED PRECAST CONCRETE STRUCTURES (APPROACH SLAB #1)	900.645			
							END OPTION CC				
							BEGIN OPTION DD				
	1				1	LS	PRECAST CONCRETE STRUCTURE (APPROACH SLAB #2)	540.10			
	1				1	LS	SPECIAL PROVISION (CONTRACTOR-FABRICATED PRECAST CONCRETE STRUCTURES (APPROACH SLAB #2)	900.645			
							END OPTION DD				
		148	149		297	CY	STONE FILL, TYPE IV	613.13			
				130	130	LF	CAST-IN-PLACE CONCRETE CURB, TYPE B	616.28			
				4	4	EACH	GUARDRAIL APPROACH SECTION, GALVANIZED 2 RAIL BOX BEAM	621.72			
		100	98		198	SY	GEOTEXTILE FOR ROADBED SEPARATOR	649.11			
		177	178		355	SY	GEOTEXTILE UNDER STONE FILL	649.31			
		41	40		81	SY	GRUBBING MATERIAL	651.40			

CONSULTING ENGINEERS

PROJECT NAME: BARTON
PROJECT NUMBER: BRO 1449(31)

FILE NAME: 11J068/cos/z11J068frm.dgn
PROJECT LEADER: J. BYATT
DESIGNED BY: M. HALEY
BRIDGE QUANTITY SHEET 1

PLOT DATE: 7/15/2014
DRAWN BY: S. GOODWIN
CHECKED BY: P. SHEDD
SHEET 12 OF 52

STATE OF VERMONT
AGENCY OF TRANSPORTATION

BRIDGE QUANTITY SHEET 2

SUMMARY OF BRIDGE QUANTITIES										TOTALS	DESCRIPTIONS			DETAILED SUMMARY OF QUANTITIES		
	APPROACH SLAB #1	APPROACH SLAB #2	ABUTMENT #1	ABUTMENT #2	SUPER-STRUCTURE	BRIDGE TOTAL		UNIT	ITEMS	ITEM NUMBER		QUANTITIES	UNIT	ITEMS
	2	2	16	15	4	39		CY	SPECIAL PROVISION (HIGH PERFORMANCE CONCRETE, RAPID SET) (FPQ)	900.608				
					140	140		LF	SPECIAL PROVISION (PRESTRESSED CONCRETE NEXT D BEAMS) (NEXT 32 D)	900.640				

PROJECT NAME: BARTON
PROJECT NUMBER: BRO 1449(31)

FILE NAME: 11J068/cos/z11J068frm.dgn
PROJECT LEADER: J. BYATT
DESIGNED BY: M. HALEY
BRIDGE QUANTITY SHEET 2

PLOT DATE: 7/15/2014
DRAWN BY: S. GOODWIN
CHECKED BY: P. SHEDD
SHEET 13 OF 52

GENERAL INFORMATION

SYMBOLOGY LEGEND NOTE

THE SYMBOLOGY ON THIS SHEET IS INTENDED TO COVER STANDARD CONVENTIONAL SYMBOLOGY. THE SYMBOLOGY IS USED FOR EXISTING & PROPOSED FEATURES WITH HEAVIER LINEWEIGHT, IN COMBINATION WITH PROJECT ANNOTATION, AS NOTED ON PROJECT PLAN SHEETS. THIS LEGEND SHEET COVERS THE BASICS. SYMBOLOGY ON PLANS MAY VARY, PLAN ANNOTATIONS AND NOTES SHOULD BE USED TO CLARIFY AS NEEDED.

R.O.W. ABBREVIATIONS (CODES) & SYMBOLS

POINT	CODE	DESCRIPTION
	CH	CHANNEL EASEMENT
	CONST	CONSTRUCTION EASEMENT
	CUL	CULVERT EASEMENT
	D&C	DISCONNECT & CONNECT
	DIT	DITCH EASEMENT
	DR	DRAINAGE EASEMENT
	DRIVE	DRIVEWAY EASEMENT
	EC	EROSION CONTROL
	HWY	HIGHWAY EASEMENT
	I&M	INSTALL & MAINTAIN EASEMENT
	LAND	LANDSCAPE EASEMENT
	R&RES	REMOVE & RESET
	R&REP	REMOVE & REPLACE
	SR	SLOPE RIGHT
	UE	UTILITY EASEMENT
	(P)	PERMANENT EASEMENT
	(T)	TEMPORARY EASEMENT
■	BNDNS	BOUND SET
⊡	BNDNS	BOUND TO BE SET
●	IPNS	IRON PIN SET
◎	IPNS	IRON PIN TO BE SET
⊠	CALC	EXISTING ROW POINT
○	PROW	PROPOSED ROW POINT
[LENGTH]		LENGTH CARRIED ON NEXT SHEET

COMMON TOPOGRAPHIC POINT SYMBOLS

POINT	CODE	DESCRIPTION
	APL	BOUND APPARENT LOCATION
	BM	BENCHMARK
	BND	BOUND
	CB	CATCH BASIN
	COMB	COMBINATION POLE
	DITHR	DROP INLET THROATED DNC
	EL	ELECTRIC POWER POLE
	FPOLE	FLAGPOLE
	GASFIL	GAS FILLER
	GP	GUIDE POST
	GSO	GAS SHUT OFF
	GUY	GUY POLE
	GUYW	GUY WIRE
	GV	GATE VALUE
	H	TREE HARDWOOD
	HCTRL	CONTROL HORIZONTAL
	HVCTRL	CONTROL HORIZ. & VERTICAL
	HYD	HYDRANT
	IP	IRON PIN
	IPIPE	IRON PIPE
	LI	LIGHT - STREET OR YARD
	MB	MAILBOX
	MH	MANHOLE (MH)
	MM	MILE MARKER
	PM	PARKING METER
	PMK	PROJECT MARKER
	POST	POST STONE/WOOD
	RRSIG	RAILROAD SIGNAL
	RRSL	RAILROAD SWITCH LEVER
	S	TREE SOFTWOOD
	SAT	SATELLITE DISH
	SHRUB	SHRUB
	SIGN	SIGN
	STUMP	STUMP
	TEL	TELEPHONE POLE
	TIE	TIE
	TSIGN	SIGN W/DOUBLE POST
	VCTRL	CONTROL VERTICAL
	WELL	WELL
	WSO	WATER SHUT OFF

THESE ARE COMMON VAOT SURVEY POINT SYMBOLS FOR EXISTING FEATURES, ALSO USED FOR PROPOSED FEATURES WITH HEAVIER LINEWEIGHT, IN COMBINATION WITH PROPOSED ANNOTATION.

PROPOSED GEOMETRY CODES

CODE	DESCRIPTION
PC	POINT OF CURVATURE
PI	POINT OF INTERSECTION
CC	CENTER OF CURVE
PT	POINT OF TANGENCY
PCC	POINT OF COMPOUND CURVE
PRC	POINT OF REVERSE CURVE
POB	POINT OF BEGINNING
POE	POINT OF ENDING
STA	STATION PREFIX
AH	AHEAD STATION SUFFIX
BK	BACK STATION SUFFIX
D	CURVE DEGREE OF (100FT)
R	CURVE RADIUS OF
T	CURVE TANGENT LENGTH
L	CURVE LENGTH OF
E	CURVE EXTERNAL DISTANCE

UTILITY SYMBOLOGY

UNDERGROUND UTILITIES

	UTILITY (GENERIC-UNKNOWN)
UT	TELEPHONE
UE	ELECTRIC
UC	CABLE (TV)
UEC	ELECTRIC+CABLE
UET	ELECTRIC+TELEPHONE
UCT	CABLE+TELEPHONE
UECT	ELECTRIC+CABLE+TELEP.
G	GAS LINE
W	WATER LINE
S	SANITARY SEWER (SEPTIC)

ABOVE GROUND UTILITIES (AERIAL)

	UTILITY (GENERIC-UNKNOWN)
T	TELEPHONE
E	ELECTRIC
C	CABLE (TV)
EC	ELECTRIC+CABLE
ET	ELECTRIC+TELEPHONE
AER E&T	ELECTRIC+TELEPHONE
CT	CABLE+TELEPHONE
ECT	ELECTRIC+CABLE+TELEP.
	UTILITY POLE GUY WIRE

PROJECT CONSTRUCTION SYMBOLOGY

PROJECT DESIGN & LAYOUT SYMBOLOGY

CZ	CLEAR ZONE
	PLAN LAYOUT MATCHLINE

PROJECT CONSTRUCTION FEATURES

	TOP OF CUT SLOPE
	TOE OF FILL SLOPE
	STONE FILL
	BOTTOM OF DITCH ℄
	CULVERT PROPOSED
	STRUCTURE SUBSURFACE
PDF	PROJECT DEMARCATION FENCE
BF	BARRIER FENCE
	TREE PROTECTION ZONE (TPZ)
	STRIPING LINE REMOVAL
	SHEET PILES

CONVENTIONAL BOUNDARY SYMBOLOGY

BOUNDARY LINES

TOWN LINE	TOWN BOUNDARY LINE
COUNTY LINE	COUNTY BOUNDARY LINE
STATE LINE	STATE BOUNDARY LINE
	PROPOSED STATE R.O.W. (LIMITED ACCESS)
	PROPOSED STATE R.O.W.
	STATE ROW (LIMITED ACCESS)
	STATE ROW
	TOWN ROW
	PERMANENT EASEMENT LINE (P)
	TEMPORARY EASEMENT LINE (T)
	SURVEY LINE
P/L	PROPERTY LINE (P/L)
SR	SLOPE RIGHTS
6f	6F PROPERTY BOUNDARY
4f	4F PROPERTY BOUNDARY
HAZ	HAZARDOUS WASTE

EPSC LAYOUT PLAN SYMBOLOGY

EPSC MEASURES

	FILTER CURTAIN
	SILT FENCE
	SILT FENCE WOVEN WIRE
	CHECK DAM
	DISTURBED AREAS REQUIRING RE-VEGETATION
	EROSION MATTING

ENVIRONMENTAL RESOURCES

	WETLAND BOUNDARY
	RIPARIAN BUFFER ZONE
	WETLAND BUFFER ZONE
	SOIL TYPE BOUNDARY
T&E	THREATENED & ENDANGERED SPECIES
HAZ	HAZARDOUS WASTE AREA
AG	AGRICULTURAL LAND
HABITAT	FISH & WILDLIFE HABITAT
FLOOD PLAIN	FLOOD PLAIN
OHW	ORDINARY HIGH WATER (OHW)
	STORM WATER
	USDA FOREST SERVICE LANDS
	WILDLIFE HABITAT SUIT/CONN

ARCHEOLOGICAL & HISTORIC

ARCH	ARCHEOLOGICAL BOUNDARY
HISTORIC DIST	HISTORIC DISTRICT BOUNDARY
HISTORIC	HISTORIC AREA
H	HISTORIC STRUCTURE

CONVENTIONAL TOPOGRAPHIC SYMBOLOGY

EXISTING FEATURES

	ROAD EDGE PAVEMENT
	ROAD EDGE GRAVEL
	DRIVEWAY EDGE
	DITCH
	FOUNDATION
	FENCE (EXISTING)
	FENCE WOOD POST
	FENCE STEEL POST
	GARDEN
	ROAD GUARDRAIL
	RAILROAD TRACKS
	CULVERT (EXISTING)
	STONE WALL
	WALL
	WOOD LINE
	BRUSH LINE
	HEDGE
	BODY OF WATER EDGE
	LEDGE EXPOSED

PROJECT NAME:	BARTON
PROJECT NUMBER:	BRO 1449(31)

FILE NAME: 11j068/cos/z11j068frm.dgn	PLOT DATE: 7/15/2014
PROJECT LEADER: J. BYATT	DRAWN BY: M. HALEY
DESIGNED BY: M. HALEY	CHECKED BY: P. SHEDD
CONVENTIONAL SYMBOLOGY LEGEND SHEET	SHEET 14 OF 52

CONSULTING ENGINEERS

CLD 12-0174 MODEL: Legend

GPS CONTROL POINTS

HVCTRL #1
REBAR

NORTH = 818474.143
EAST = 1712118.108
ELEV. = 1260.608

HVCTRL #2
REBAR

NORTH = 816981.669
EAST = 1713275.201
ELEV. = 1214.944

TRAVERSE TIES

HVCTRL #4
NORTH = 816068.406
EAST = 1714460.305
ELEV. = 1144.447

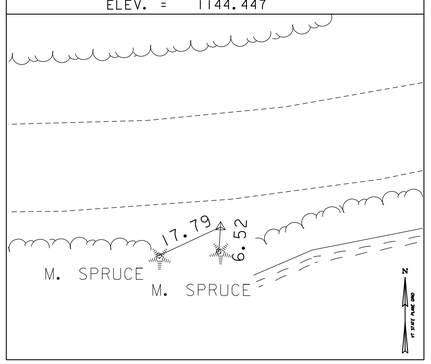

HVCTRL #5
NORTH = 816632.784
EAST = 1715407.711
ELEV. = 1125.843

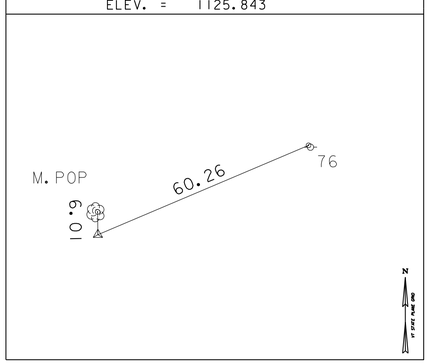

NORTH =
EAST =
ELEV. =

NORTH =
EAST =
ELEV. =

NORTH =
EAST =
ELEV. =

ALIGNMENT TIES

NORTH =
EAST =
ELEV. =

NORTH =
EAST =
ELEV. =

NORTH =
EAST =
ELEV. =

NORTH =
EAST =
ELEV. =

NORTH =
EAST =
ELEV. =

DATUM

VERTICAL NAVD 88

HORIZONTAL NAD 83(96)

ADJUSTMENT COMPASS

PROJECT NAME: BARTON

PROJECT NUMBER: BRO 1449(31)

FILE NAME: survey\xlij068ti.dgn
PROJECT LEADER: C. WILLIAMS
DESIGNED BY:
TIE SHEET

PLOT DATE: 7/15/2014
DRAWN BY: R. BULLOCK
CHECKED BY:
SHEET 15 OF 52

ALIGNMENT TIES

POT 38+08.83
NORTH = 816083.335
EAST = 1714260.167

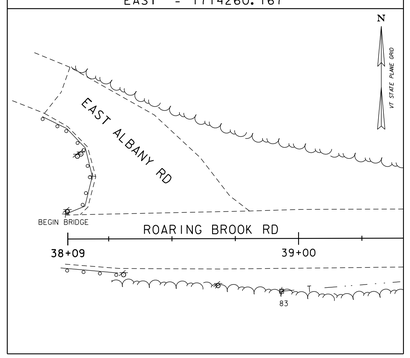

PC 39+66.76
NORTH = 816083.700
EAST = 1714418.093

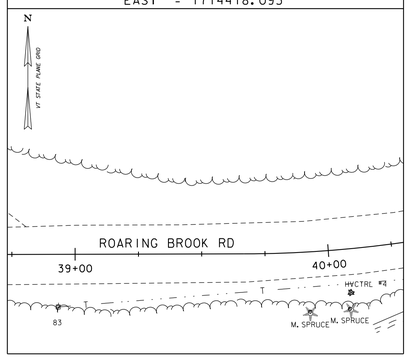

PT 42+87.76
NORTH = 816193.433
EAST = 1714712.642

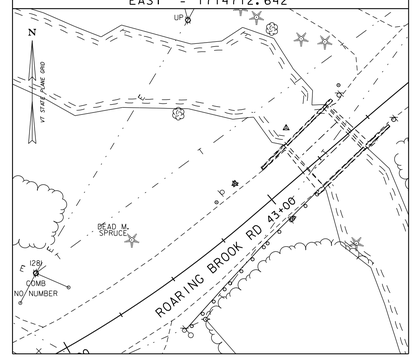

PC 43+51.30
NORTH = 816234.900
EAST = 1714760.796

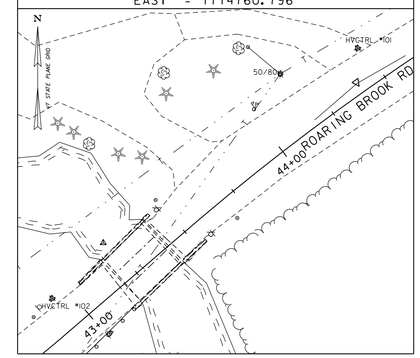

PT 45+27.78
NORTH = 816336.744
EAST = 1714904.593

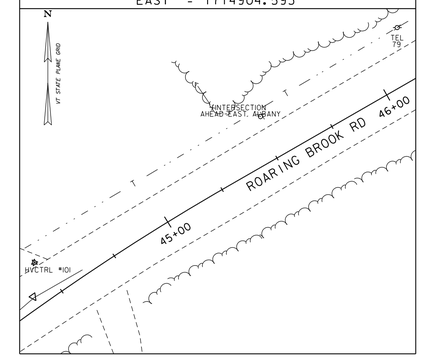

ALIGNMENT TIES

POT 48+28.03
NORTH = 816486.341
EAST = 1715164.920

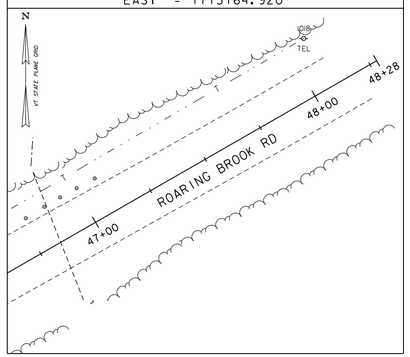

DATUM

VERTICAL _____

HORIZONTAL _____

ADJUSTMENT _____

PROJECT NAME: BARTON

PROJECT NUMBER: BRO 1449(31)

FILE NAME: z11j068/cos/z11j068ti.dgn

PROJECT LEADER: J. BYATT

DESIGNED BY: M. HALEY

TIE SHEET 2

PLOT DATE: 7/15/2014

DRAWN BY: W. GORDON

CHECKED BY: P. SHEDD

SHEET 16 OF 52

CLD 12-0174 MODEL: TIE SHEET 02

TEMPORARY 4 INCH WHITE LINE, PAINT
DURABLE 4 INCH WHITE LINE, POLYUREA
39+75 TO 46+25 SOLID LT & RT

TEMPORARY 4 INCH YELLOW LINE, PAINT
DURABLE 4 INCH YELLOW LINE, POLYUREA
39+75 TO 46+25 SOLID LT & RT

REMOVING SIGNS
AS SHOWN - 7

ERECTING SALVAGED SIGNS
AS SHOWN - 2

REMOVAL OF EXISTING DELINEATOR
42+43 RT

GUARDRAIL APPROACH SECTION,
GALVANIZED 2 RAIL BOX BEAM
42+74.3 TO 43+04.7 LT
42+75.0 TO 43+04.7 RT
43+52.3 TO 43+64.2 LT (R=10')
43+53.4 TO 43+82.8 RT

BRIDGE RAILING,
GALVANIZED 2 RAIL BOX BEAM
43+04.7 TO 43+52.3 LT
43+04.7 TO 43+53.4 RT

STEEL BEAM
GUARDRAIL, GALVANIZED
42+24.3 TO 42+74.3 LT
42+25.0 TO 42+75.0 RT
43+82.8 TO 44+45.3 RT

ANCHOR FOR STEEL BEAM RAIL
42+24.3 LT
42+25.0 RT
43+64.2 LT
44+45.3 RT

REMOVAL AND DISPOSAL OF GUARDRAIL
42+43 TO 43+16 RT

CONSTRUCT DRIVES
41+75 LT (24.0 FT WIDE, GRAVEL, W/ 4' PAVED APRON, RES.)
43+72 LT (13.0 FT WIDE, PAVED, RES.)

DELINEATOR WITH STEEL POST
42+24.3 LT
42+25.0 RT
43+55 LT
44+45.3 RT

RELOCATE MAILBOX, SINGLE SUPPORT
44+01 LT

STONE FILL, TYPE II
GEOTEXTILE UNDER STONE FILL
42+75 TO 43+03 LT (SLOPE)
43+55 TO 44+25 RT (DITCH)

STONE FILL, TYPE IV
GEOTEXTILE UNDER STONE FILL
43+03 TO 43+19 LT & RT
43+35 TO 43+55 LT & RT

8 INCH UNDERDRAIN PIPE
41+50 TO 43+02 LT
43+60 TO 44+50 RT

UNDERDRAIN FLUSHING BASIN
41+50 LT
44+50 RT

CURVE (1)
DELTA = 40°36'00" LT
D = 12°38'53"
R = 453.00'
T = 167.57'
L = 321.00'
E = 30.00'
BANK = 0.052 AT 25 MPH

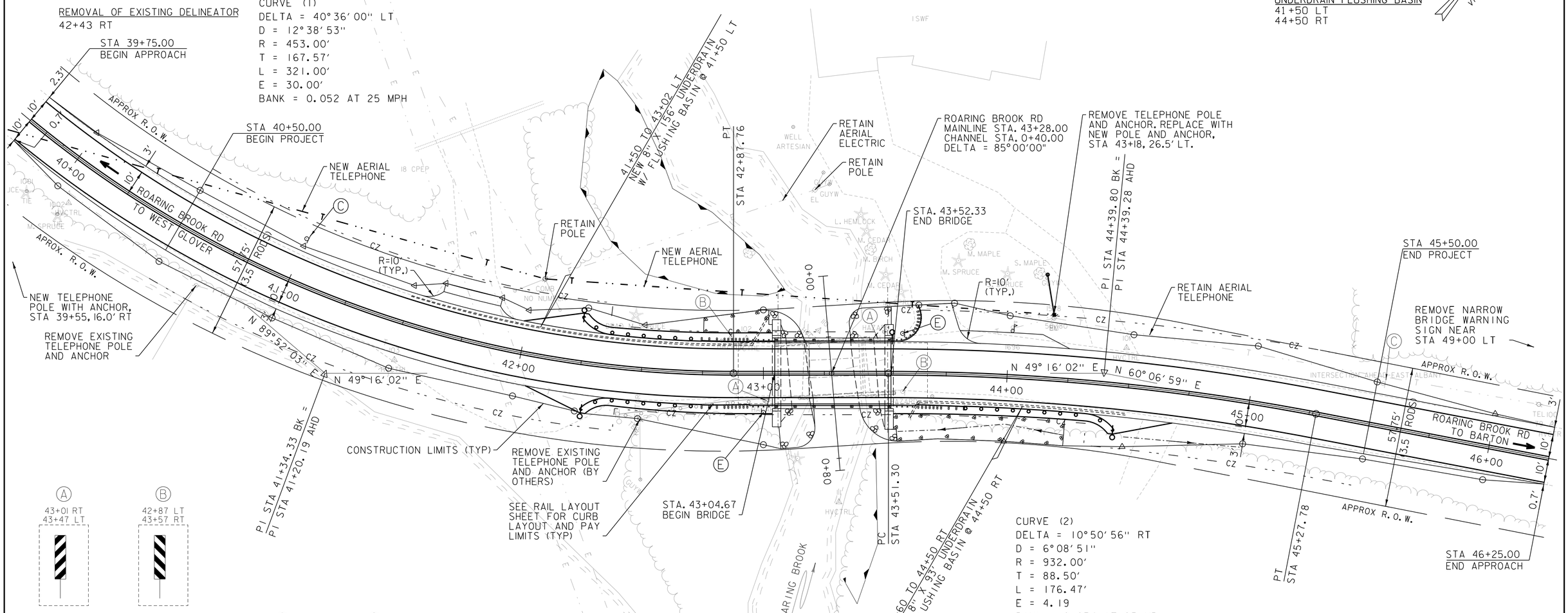

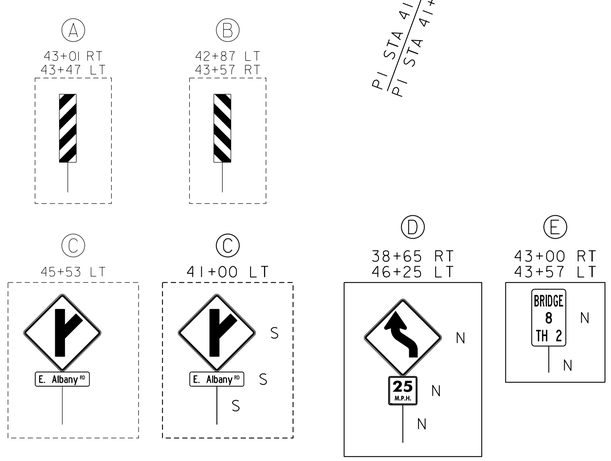

LEGEND

N	NEW SIGN
R	RETAIN SIGN
S	SALVAGE SIGN
	REMOVE SIGN

CURVE (2)
DELTA = 10°50'56" RT
D = 6°08'51"
R = 932.00'
T = 88.50'
L = 176.47'
E = 4.19
BANK = 0.034 AT 25 MPH

RIGHT-OF-WAY PLAN REFERENCES

1) "STATE OF VERMONT DEPARTMENT OF HIGHWAYS - PROPOSED IMPROVEMENT - SECONDARY PROJECT - TOWN OF BARTON, COUNTY OF ORLEANS, STATE AID ROUTE 4, WEST GLOVER-BARTON ROAD - PROJECT S NO. 94(1)", DATED 1954, ON FILE AT THE STATE OF VERMONT AGENCY OF TRANSPORTATION.

2) "STATE OF VERMONT AGENCY OF TRANSPORTATION - PROPOSED IMPROVEMENT - TOWN OF BARTON, COUNTY OF ORLEANS, TOWN HIGHWAY 2 (WEST GLOVER ROAD) - PROJECT SOS NO. 2199(4)", DATED 1976, ON FILE AT THE STATE OF VERMONT AGENCY OF TRANSPORTATION.

EXISTING BRIDGE DATA:
A 26-FOOT SPAN CONCRETE T-BEAM BRIDGE ON CAST-IN-PLACE CONCRETE ABUTMENTS ON SPREAD FOOTINGS CONSTRUCTED IN 1928.

0 20 40
(SCALE 1" = 20')

CONSULTING ENGINEERS

PROJECT NAME: BARTON	
PROJECT NUMBER: BRO 1449(31)	
FILE NAME: 11J068/cos/z11J068bdr.dgn	PLOT DATE: 7/15/2014
PROJECT LEADER: J. BYATT	DRAWN BY: M. HALEY
DESIGNED BY: M. HALEY	CHECKED BY: P. SHEDD
LAYOUT SHEET	SHEET 17 OF 52

CLD 12-0174 MODEL: L01

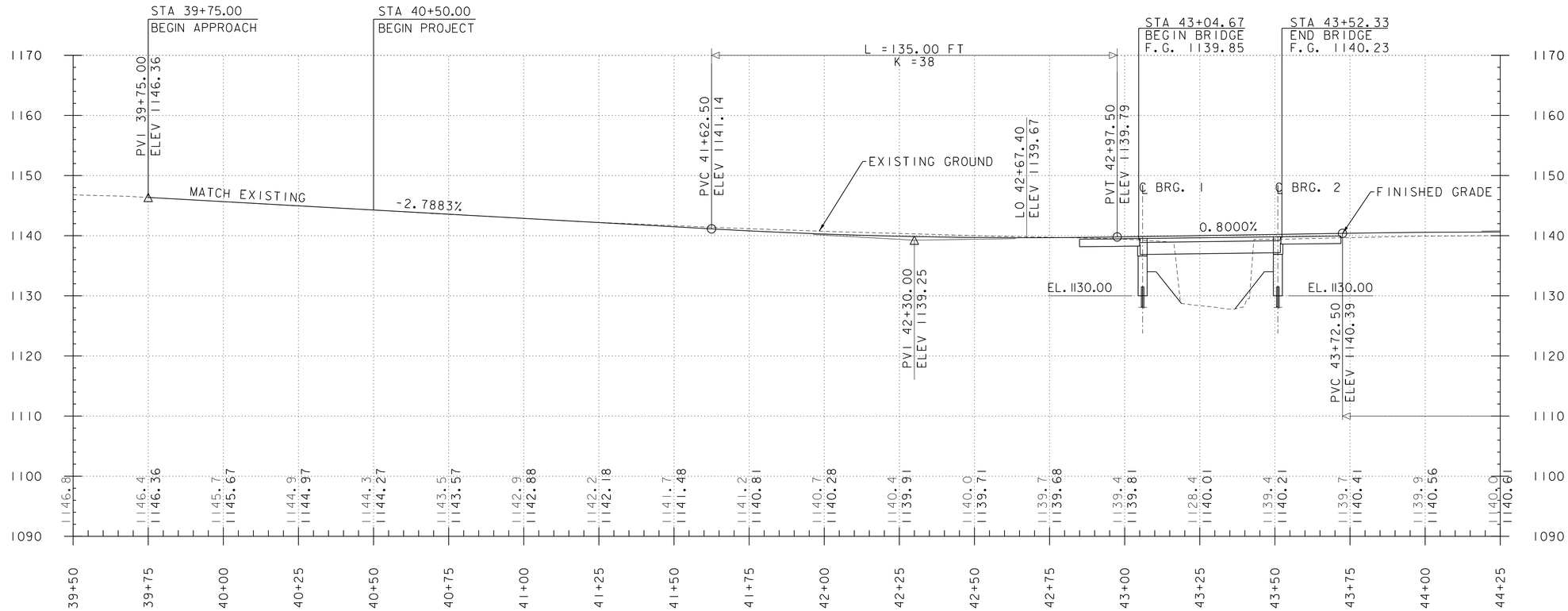

THE ELEVATIONS SHOWN TO THE NEAREST TENTH ARE THE OLD GROUND ALONG THE CENTERLINE.

THE ELEVATIONS SHOWN TO THE NEAREST HUNDREDTH ARE THE PROPOSED FINISHED GRADE ALONG THE CENTERLINE.

ROARING BROOK ROAD PROFILE

HOR. SCALE 1" = 20'-0"
VER. SCALE 1" = 10'-0"

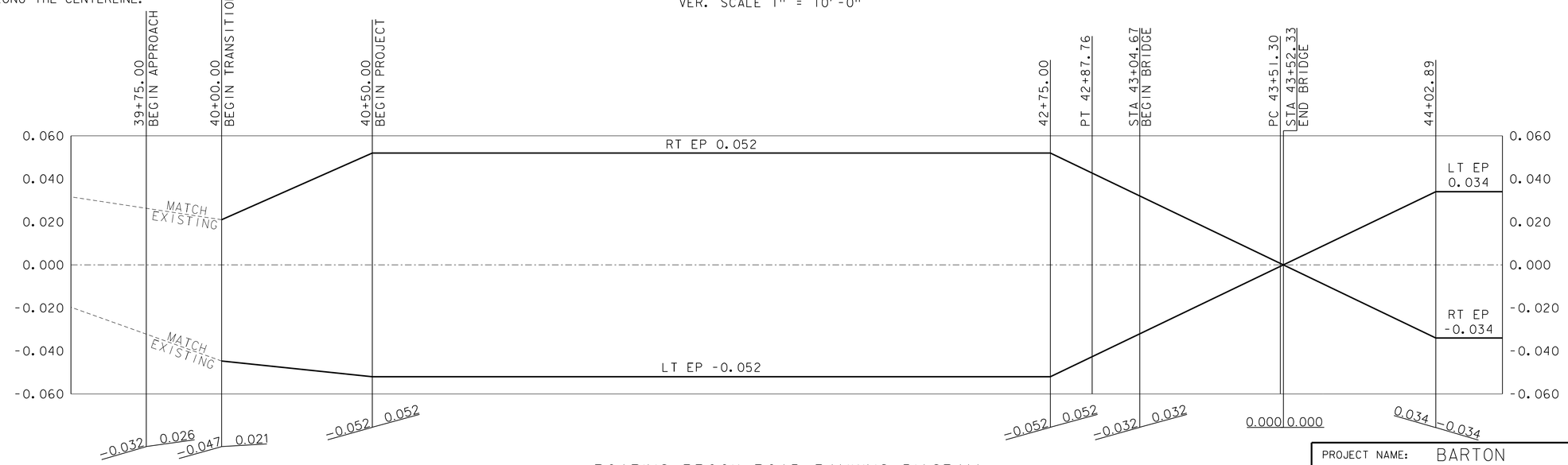

ROARING BROOK ROAD BANKING DIAGRAM

NOT TO SCALE

PROJECT NAME: BARTON	
PROJECT NUMBER: BRO 1449(31)	
FILE NAME: 11J068/cos/z11j068pro.dgn	PLOT DATE: 7/15/2014
PROJECT LEADER: J. BYATT	DRAWN BY: M. HALEY
DESIGNED BY: M. HALEY	CHECKED BY: P. SHEDD
PROFILE AND BANKING DIAGRAM SHEET 1	SHEET 18 OF 52

CLD 12-0174 MODEL: PR001

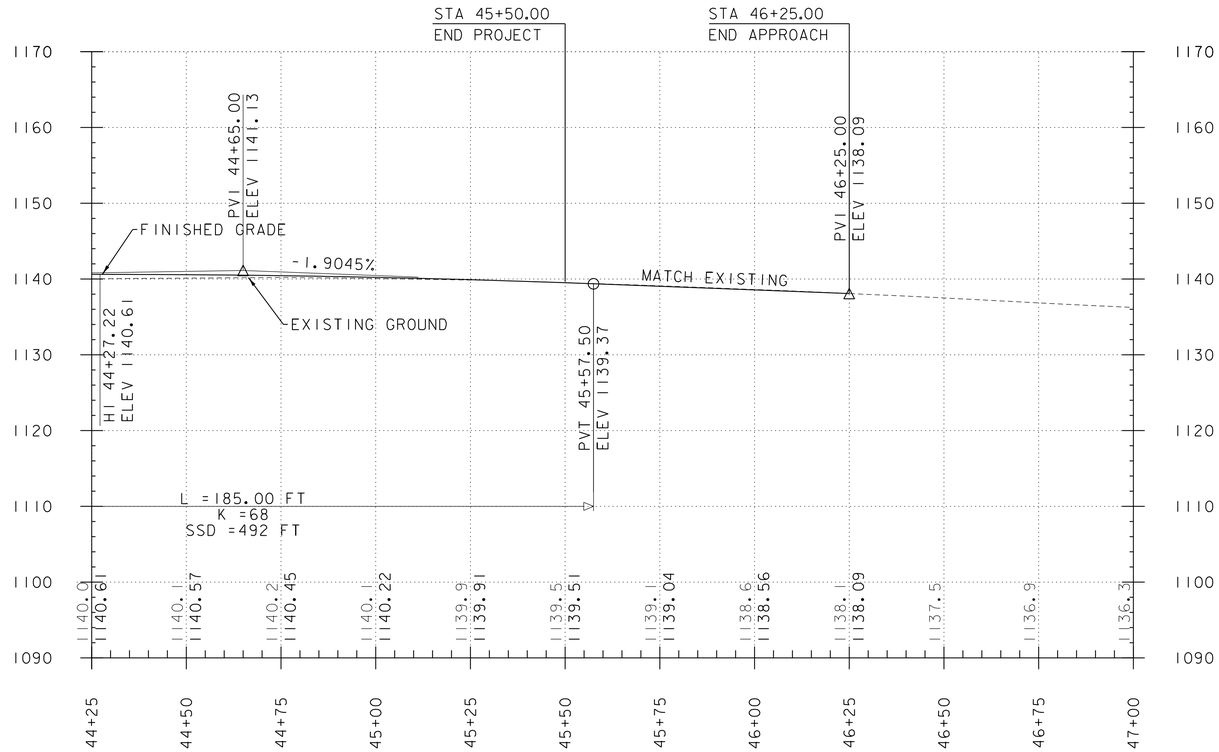

THE ELEVATIONS SHOWN TO THE NEAREST TENTH ARE THE OLD GROUND ALONG THE CENTERLINE.

THE ELEVATIONS SHOWN TO THE NEAREST HUNDREDTH ARE THE PROPOSED FINISHED GRADE ALONG THE CENTERLINE.

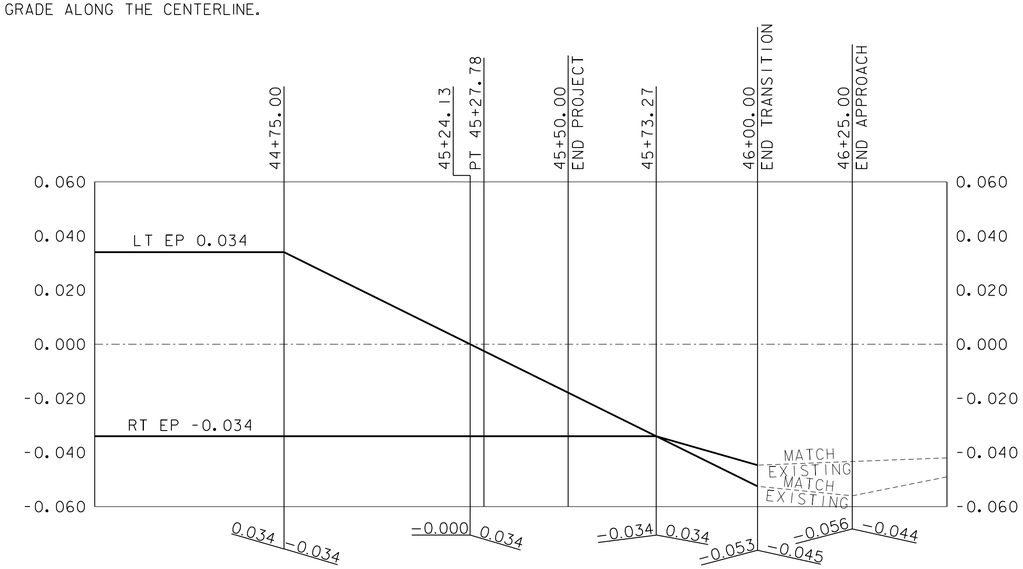

PROJECT NAME: BARTON	
PROJECT NUMBER: BRO 1449(31)	
FILE NAME: 11J068/cos/z11j068pro.dgn	PLOT DATE: 7/15/2014
PROJECT LEADER: J. BYATT	DRAWN BY: M. HALEY
DESIGNED BY: M. HALEY	CHECKED BY: P. SHEDD
PROFILE AND BANKING DIAGRAM SHEET 2	SHEET 19 OF 52

CLD 12-0174 MODEL: PR002

STATE OF VERMONT
AGENCY OF TRANSPORTATION

TRAFFIC SIGN SUMMARY SHEET

SHSM = FHWA 2004 STANDARD HIGHWAY SIGNS AND MARKINGS BOOK AND THE 2012 SUPPLEMENT TO THE 2004 EDITION

MILEMARKER, STATION, OR SIGN NUMBER	SIGN LEGEND	SIGN DIMENSIONS			NEW & SALVAGED SIGNS				EXIST POST		NEW SIGN POSTS																		REMARKS	SIGN DETAIL		
											NO. OF POSTS	SQUARE STEEL (in)					TUBULAR ALUMINUM Ø (in)			TUBULAR STEEL Ø (in)					W-SHAPE STEEL							
		EA	WIDTH (in)	HEIGHT (in)	"A"	"B"	SALV SIGN	SALV TIS	RETAIN	SALVAGE		1.75	2.0	2.5	ANCHOR	SLEEVE	3.0	4.0	4.0 MOD	FOUND-ATION	3.0	3.5	4.0	5.0	FTG. SIZE 24"	FTG. SIZE 30"	WEIGHT	POST SIZE	SIGN FRAME REQUIRED		SHSM	DETAIL ON SHEET NUMBER	STD. SHEET NUMBER
												lb/ft					lb/ft				lb/ft											
												1.88	2.42	3.35			1.3	1.7	1.7		7.6	9.0	10.8	14.6								
TH 2 38+65 RT		1	30	30	6.25						1		X		X															WI-2L		
	25 M.P.H.	1	18	18	2.25																									WI3-1P		
41+00 LT							1			1																						
	E. Albany RD						1																									
43+00 RT	BRIDGE 8 TH 2	1	6	10	0.42						1	X			X														VD-701			T-42
43+57 LT	BRIDGE 8 TH 2	1	6	10	0.42						1	X			X														VD-701			T-42
46+25 LT		1	30	30	6.25						1		X		X															WI-2L		
	25 M.P.H.	1	18	18	2.25																									WI3-1P		
ROUNDING					0.16							0	0																			
												FT 20	FT 30	FT		EA	LB	LB	LB		LB	LB	LB	LB								
SHEET TOTALS					SF 18.00	SF	EA. 2	SF				FT 50					LB			EA.	LB				EA.	EA.	LB					

FINAL POST LENGTHS ARE TO BE DETERMINED IN THE FIELD. POST SIZES ARE COMPUTED BASED ON INFORMATION FURNISHED ON THE STANDARD SHEETS AND VAOT "SIGN POST DESIGN GUIDELINE."

CLD 12-0121

CONSULTING ENGINEERS

PROJECT NAME: BARTON
PROJECT NUMBER: BRO 1449(31)

FILE NAME: z11j068tsdet.dgn
PROJECT LEADER: J. BYATT
DESIGNED BY: M. HALEY
TRAFFIC SIGN SUMMARY SHEET

PLOT DATE: 7/15/2014
DRAWN BY: W. GORDON
CHECKED BY: P. SHEDD
SHEET 20 OF 52

GENERAL NOTES

SIGN DESIGN AND FABRICATION NOTES

1. ALL SIGNS SHALL BE DESIGNED IN ACCORDANCE WITH THE LATEST REVISION OF THE 2009 MUTCD, THE 2004 STANDARD HIGHWAY SIGNS AND MARKINGS (SHSM), AND THE 2012 SUPPLEMENT TO THE 2004 EDITION (SHSM) DETAILS AS AVAILABLE, VAOT STANDARDS OR AS DETAILED IN THE PLANS.

2. ALL LETTERS AND NUMBERS USED FOR ALL SIGNS SHALL CONFORM TO THE APPLICABLE FONT AS DEFINED AND DETAILED IN THE 2004 SHSM AND THE 2012 SUPPLEMENT.

3. ALL ARROWS AND SYMBOLS SHALL CONFORM WITH THE 2004 SHSM AND THE 2012 SUPPLEMENT UNLESS OTHERWISE DETAILED IN THE PLANS.

4. COLORS USED ON ALL SIGNS SHALL CONFORM WITH THE REQUIREMENTS OF SECTION 1A.12 OF THE MUTCD.

5. SIGN SHEETING FOR FLUORESCENT YELLOW AND FLUORESCENT YELLOW GREEN SHALL BE AASHTO M268 (ASTM D4956) TYPE VII, VIII OR IX. ALL OTHER SIGN SHEETING SHALL BE TYPE III OR IV.

6. SHEETING TYPES AND MANUFACTURERS SHALL NOT BE MIXED ON A SINGLE SIGN ASSEMBLY. SHEETING COLOR/TYPE SHOULD BE BY THE SAME MANUFACTURER AND BE CONSISTENT THROUGHOUT THE PROJECT UNLESS OTHERWISE DETAILED ON THE PLANS.

7. SIGN BASE MATERIAL FOR DELINEATORS AND MILE MARKER PLAQUES (VD-700) SHALL BE 0.063" THICK FLAT SHEET ALUMINUM. ALL TOWN HIGHWAY SIGNS (D3-1) SHALL BE 0.125" THICK FLAT SHEET ALUMINUM OR EXTRUDED ALUMINUM WITH 0.25 INCH FLANGE AND 0.090 INCH WEB. UNLESS OTHERWISE NOTED ON THE PLANS, ALL OTHER SIGNS SHALL BE FLAT SHEET ALUMINUM WITH THE FOLLOWING MINIMUM THICKNESSES:

SIGN SIZE	12" X 12"		
	18" X 18"		
	21" X 15"		
	24" X 8"		
	24" X 10"		48" X 18"
	24" X 12"	36" X 12"	48" X 24"
	24" X 18"	36" X 15"	48" X 30"
	24" X 24"	36" X 18"	48" X 42"
	24" X 30"	36" X 24"	48" X 48"
	30" X 15"	36" X 36"	48" X 60"
	30" X 18"	36" X 42"	72" X 10"
	30" X 30"	36" X 48"	72" X 12"
	30" X 42"	36" X 54"	72" X 20"
THICKNESS	0.080"	0.100"	0.125"

SIGN POST NOTES

1. ALL SIGN POSTS SHALL BE INSTALLED IN A NEW ANCHOR. ALL SIGNS INSTALLED IN PAVED OR CONCRETE ISLANDS OR SIDEWALKS SHALL ALSO BE INSTALLED WITH AN 18" SLEEVE. PAYMENT FOR SLEEVE SHALL BE INCIDENTAL TO THE SIGN POST.

2. 1.75" SQUARE STEEL POSTS SHALL BE 14 GAUGE STEEL. 2.0" AND 2.5" SQUARE STEEL POSTS SHALL BE 12 GAUGE STEEL.

SIGN INSTALLATION NOTES

1. THE CONTRACTOR SHALL BE RESPONSIBLE FOR REPAIRING ANY DAMAGE TO PRIVATE OR PUBLIC PROPERTY CAUSED BY THE CONTRACTOR, AT THE CONTRACTORS EXPENSE.

2. ALL SIGNS WITHIN THE PROJECT LIMITS ARE TO BE REPLACED UNLESS OTHERWISE NOTED OR AS DIRECTED BY THE ENGINEER. SIGN LOCATIONS AS SHOWN ON THE PLANS ARE APPROXIMATE. EXACT LOCATIONS TO BE DETERMINED IN THE FIELD.

3. ALL SIGN PLACEMENT SHALL BE IN CONFORMANCE WITH VAOT STANDARD E-121 STANDARD SIGN PLACEMENT CONVENTIONAL ROADS, UNLESS OTHERWISE NOTED.

4. ALL SIGNS, FRAMES, MOUNTING HARDWARE, POSTS, AND ANCHORS FOR ANY SIGN ASSEMBLY SHALL BE REPLACED AT THE SAME TIME. MIXING OF OLD AND NEW SIGNS ON THE SAME ASSEMBLY WILL NOT BE ALLOWED EXCEPT AS NOTED ON THE PLANS.

5. NEW SIGNS WITH THEIR GREATER NIGHTTIME RETROREFLECTIVITY CAN OBSCURE OLDER SIGNS MOUNTED ADJACENT TO THEM. TO AVOID CONFUSION OF ROAD USERS, WORK SHALL BE COORDINATED SUCH THAT ALL SIGNS ASSOCIATED WITH A CURVE, INTERSECTION, OR SPEED CHANGE, SHALL BE REPLACED ON THE SAME DAY AND NOT LEFT INCOMPLETE NOR WITH A MIXTURE OF OLD AND NEW SIGNS WITHIN A GROUP OF ASSOCIATED SIGNS.

NOT TO SCALE

CONSULTING ENGINEERS

PROJECT NAME: BARTON
PROJECT NUMBER: BRO 1449(31)

FILE NAME: z11j068tsdet.dgn
PROJECT LEADER: J. BYATT
DESIGNED BY: M. HALEY
SIGN DETAIL SHEET

PLOT DATE: 7/15/2014
DRAWN BY: W. GORDON
CHECKED BY: P. SHEDD
SHEET 21 OF 52

CLD 12-0121

SOIL CLASSIFICATION

AASHTO

A1	Gravel and Sand
A3	Fine Sand
A2	Silty or Clayey Gravel and Sand
A4	Silty Soil - Low Compressibility
A5	Silty Soil - Highly Compressible
A6	Clayey Soil - Low Compressibility
A7	Clayey Soil - Highly Compressible

ROCK QUALITY DESIGNATION

R.Q.D. (%)	ROCK DESCRIPTION
<25	Very Poor
25 to 50	Poor
51 to 75	Fair
76 to 90	Good
>90	Excellent

SHEAR STRENGTH

UNDRAINED SHEAR STRENGTH IN P.S.F.	CONSISTENCY
<250	Very Soft
250-500	Soft
500-1000	Med. Stiff
1000-2000	Stiff
2000-4000	Very Stiff
>4000	Hard

CORRELATION GUIDE OF "N" TO DENSITY/CONSISTENCY

DENSITY (GRANULAR SOILS)		CONSISTENCY (COHESIVE SOILS)	
N	DESCRIPTIVE TERM	N	DESCRIPTIVE TERM
<5	Very Loose	<2	Very Soft
5-10	Loose	2-4	Soft
11-24	Med. Dense	5-8	Med. Stiff
25-50	Dense	9-15	Stiff
>50	Very Dense	16-30	Very Stiff
		31-60	Hard
		>60	Very Hard

COMMONLY USED SYMBOLS

▼	Water Elevation
⊗	Standard Penetration Boring
⊕	Auger Boring
⊙	Rod Sounding
S	Sample
N	Standard Penetration Test Blow Count Per Foot For: 2" O.D. Sampler 1 3/8" I.D. Sampler Hammer Weight Of 140 Lbs. Hammer Fall Of 30"
VS	Field Vane Shear Test
US	Undisturbed Soil Sample
B	Blast
DC	Diamond Core
MD	Mud Drill
WA	Wash Ahead
HSA	Hollow Stem Auger
AX	Core Size 1 1/8"
BX	Core Size 1 5/8"
NX	Core Size 2 1/8"
M	Double Tube Core Barrel Used
LL	Liquid Limit
PL	Plastic Limit
PI	Plasticity Index
NP	Non Plastic
w	Moisture Content (Dry Wgt. Basis)
D	Dry
M	Moist
MTW	Moist To Wet
W	Wet
Sat	Saturated
Bo	Boulder
Gr	Gravel
Sa	Sand
Si	Silt
Cl	Clay
HP	Hardpan
Le	Ledge
NLTD	No Ledge To Depth
CNPF	Can Not Penetrate Further
TLOB	Top of Ledge Or Boulder
NR	No Recovery
Rec.	Recovery
%Rec.	Percent Recovery
RQD	Rock Quality Designation
CBR	California Bearing Ratio
<	Less Than
>	Greater Than
R	Refusal (N > 100)
VTSPG	NAD83 - See Note 7

COLOR

blk	Black	pnk	Pink
bl	Blue	pu	Purple
brn	Brown	rd	Red
dk	Dark	tn	Tan
gry	Gray	wh	White
gn	Green	yel	Yellow
lt	Light	mltc	Multicolored
or	Orange		

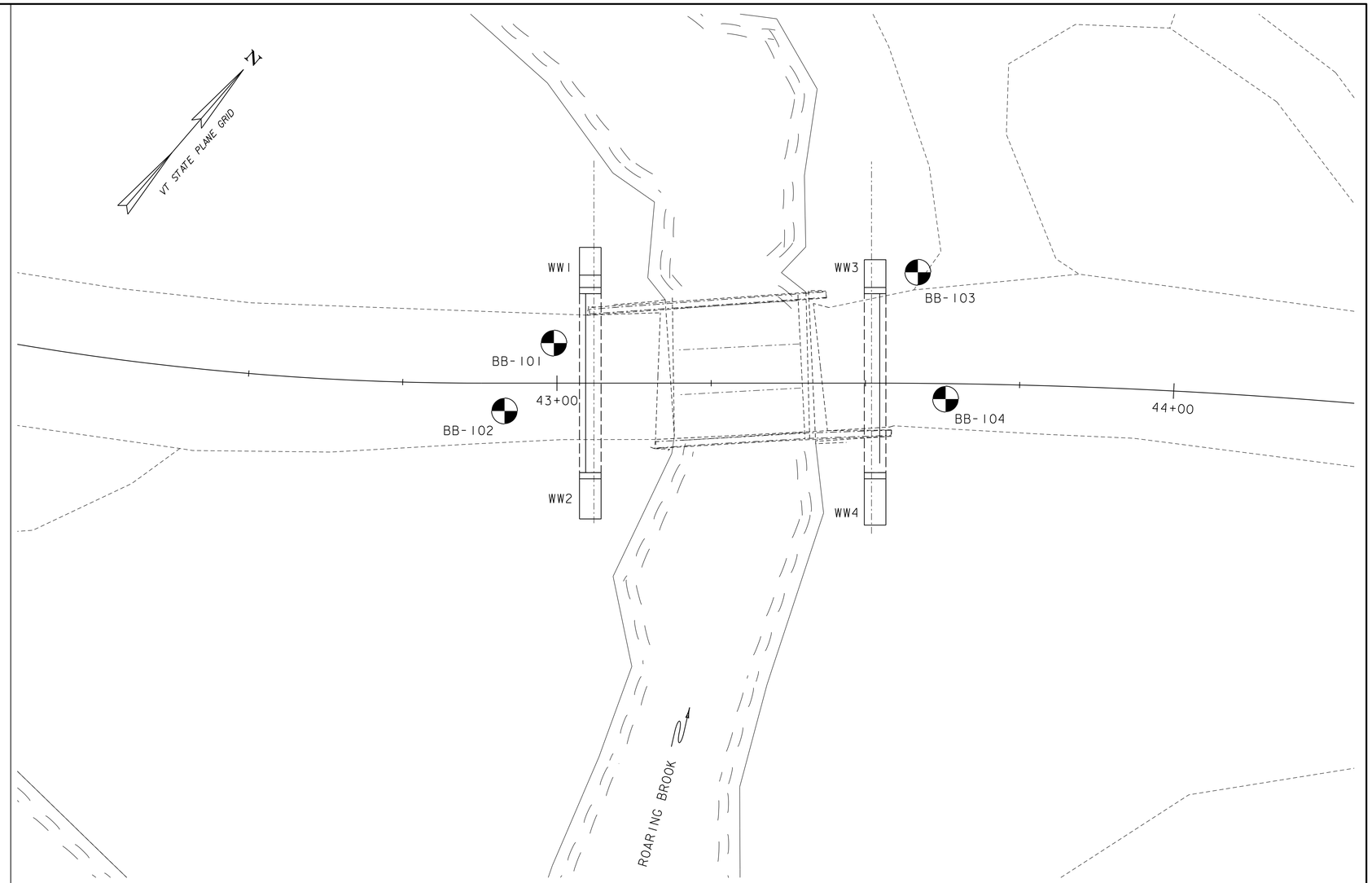

BORING PLAN

SCALE 1" = 10'-0"

10 0 10

BORING CHART

HOLE NO.	SURV. STATION	OFFSET	GROUND ELEV.	ELEV. TLOB
BB-101	42+99.5	6.5' LT	1139.0'	N/A
BB-102	42+91.5	4.5' RT	1139.0'	1060.0'
BB-103	43+58.5	18.0' LT	1139.0'	1061.0'
BB-104	43+63.0	2.5' RT	1139.0'	N/A

DEFINITIONS (AASHTO)

BEDROCK (LEDGE) - Rock in its native location of indefinite thickness.

BOULDER - A rock fragment with an average dimension > 12 inches.

COBBLE - Rock fragments with an average dimension between 3 and 12 inches.

GRAVEL - Rounded particles of rock < 3" and > 0.0787" (#10 sieve).

SAND - Particles of rock < 0.0787" (#10 sieve) and > 0.0029" (#200 sieve).

SILT - Soil < 0.0029" (#200 sieve), non or slightly plastic and exhibits no strength when air-dried.

CLAY - Fine grained soil, exhibits plasticity when moist and considerable strength when air-dried.

VARVED - Alternate layers of silt and clay.

HARDPAN - Extremely dense soil, cemented layer, not softened when wet.

MUCK - Soft organic soil (containing > 10% organic material.

MOISTURE CONTENT - Weight of water divided by dry weight of soil.

FLOWING SAND - Granular soil so saturated (loose) that it flows into drill casing during extraction of wash rod.

STRIKE - Angle from magnetic north to line of intersection of bed with a horizontal plane.

DIP - Inclination of bed with a horizontal plane.

GENERAL NOTES

1. The subsurface explorations shown herein were made between 6/24/13 and 6/25/13 by Golder Associates, Inc.

2. Soil and rock classifications, properties and descriptions are based on engineering interpretation from available subsurface information by the Agency and may not necessarily reflect actual variations in subsurface conditions that may be encountered between individual boring or sample locations.

3. Observed water levels and/or conditions indicated are as recorded at the time of exploration and may vary according to the prevailing rainfall, methods of exploration and other factors.

4. Engineering judgment was exercised in preparing the subsurface information presented herein. Analysis and interpretation of subsurface data was performed and interpreted for Agency design and estimating purposes. Presentation of the information in the Contract is intended to provide the Contractor access to the same data available to the Agency. The subsurface information is presented in good faith and is not intended as a substitute for personal investigation, independent interpretation, independent analysis or judgment by the Contractor.

5. Pictorial structure details shown on the boring plan layout or soils profile are for illustrative purposes only and may not accurately portray final contract details.

6. Terminology used on boring logs to describe the hardness, degree of weathering, and spacing of fractures, joints and other discontinuities in the bedrock is defined in the AASHTO Manual on Subsurface Investigations, 1988.

7. Northing and Easting coordinates are shown in Vermont State Plane Grid North American Datum 1983 in meters and survey feet.

CONSULTING ENGINEERS

PROJECT NAME: BARTON

PROJECT NUMBER: BRO 1449(31)

FILE NAME: 11j068/cos/z11j068bor.dgn
PROJECT LEADER: J. BYATT
DESIGNED BY: S. BEAUMONT
BORING INFORMATION SHEET

PLOT DATE: 7/15/2014
DRAWN BY: M. SMITH
CHECKED BY: J. BYATT
SHEET 22 OF 52

CLD 12-0174 MODEL: BOR01

STATE OF VERMONT
AGENCY OF TRANSPORTATION
MATERIALS & RESEARCH SECTION
SUBSURFACE INFORMATION

BORING NUMBER: BB-101
SHEET 1 of 2
DATE STARTED: 2/14/13
DATE COMPLETED: 2/15/13

PROJECT NAME: CLD Roaring Brook Bridge
SITE NAME: Barton, VT
STATION: 42+99.5
OFFSET: LT 6.5'
VTSPG:

PROJECT NUMBER: 123-87464
SITE NUMBER: BRO 1449(31)
GROUND ELEVATION: 1139.0 ft
GROUNDWATER DEPTH: 9.3 ft 2/15/13
PROJECT PIN NUMBER: Barton, VT TH 2 BR 8

BORING CREW
CREW CHIEF:
DRILLER: P. LaBoissier
LOGGER: N. Chinburg

BORING RIG: Mobile B-47 Truck
BORING TYPE: WASH BORE
SAMPLE TYPE: SPLIT BARREL
CHECKED BY: MRH

DEPTH (ft)	SYMBOL	CLASSIFICATION OF MATERIALS (Description)	BLOWS PER FOOT	M.C. (%)	GRAVEL (%)	SAND (%)	FINES (%)
		0.0 ft - 0.5 ft, Asphalt.					
		A-1-B, GrSa, Rec. = 1.58 ft, Brown, wet, very dense, fine to coarse SAND and GRAVEL (GM) [Sample 1D].	R				
5		A-2-4, Sa, Rec. = 0.42 ft, Brown, wet, compact, fine to medium SAND (SP) [Sample 2D].	12				
		A-2-4, Sa, Rec. = 1.33 ft, Brown-gray, wet, very loose, fine SAND, some fine to coarse gravel, trace medium sand, trace organics (wood) (SP) [Sample 3D].	3				
10		A-2-4, GrSiSa, Rec. = 1.42 ft, Brown, wet, loose, silty gravelly SAND with rust colored staining (SM) [Sample 4D - Top 12"].	9		16.6	54.3	29.1
		A-6, SiCl, Gray, wet, stiff, CLAY with lenses of silt and fine to medium sand, medium plasticity (CL) [Sample 4D - Bottom 7"].					
		13.0 ft - 14.0 ft, Boulder based on drill behavior.					
15		A-2-4, GrSaSi, Rec. = 0.58 ft, Gray, wet, very dense, silty gravelly SAND (SM) [Sample 5D].	98				
20		Rec. = 0.0 ft, 19.0 ft - 21.0 ft, No recovery [Sample 6D].	68				
25		A-4, GrSaSi, Rec. = 1.25 ft, Gray, wet, very dense, sandy SILT, trace fine gravel (ML) [Sample 7D].	88				
		A-4, SaSi, Rec. = 1.0 ft, Gray, wet, very dense, sandy SILT (ML) [Sample 8D].	R		6.9	23.7	69.4

BOTTOM OF ABUT. 1
EL. 1130.0'

LOG OF BORING CLD BARTON BRIDGE.GPJ VT AOT.GDT 5/1/13

STATE OF VERMONT
AGENCY OF TRANSPORTATION
MATERIALS & RESEARCH SECTION
SUBSURFACE INFORMATION

BORING NUMBER: BB-101
SHEET 2 of 2
DATE STARTED: 2/14/13
DATE COMPLETED: 2/15/13

PROJECT NAME: CLD Roaring Brook Bridge
SITE NAME: Barton, VT
STATION: 42+99.5
OFFSET: LT 6.5'
VTSPG:

PROJECT NUMBER: 123-87464
SITE NUMBER: BRO 1449(31)
GROUND ELEVATION: 1139.0 ft
GROUNDWATER DEPTH: 9.3 ft 2/15/13
PROJECT PIN NUMBER: Barton, VT TH 2 BR 8

BORING CREW
CREW CHIEF:
DRILLER: P. LaBoissier
LOGGER: N. Chinburg

BORING RIG: Mobile B-47 Truck
BORING TYPE: WASH BORE
SAMPLE TYPE: SPLIT BARREL
CHECKED BY: MRH

DEPTH (ft)	SYMBOL	CLASSIFICATION OF MATERIALS (Description)	BLOWS PER FOOT	M.C. (%)	GRAVEL (%)	SAND (%)	FINES (%)
35		A-4, SaSi, Rec. = 0.75 ft, Gray, wet, very dense, fine SAND, increasing silt with depth (SM) [Sample 9D].	R				
40		A-4, Si, Rec. = 1.58 ft, Gray, wet, very dense, SILT, some fine sand (ML) [Sample 10D].	57				
45		A-6, Cl, Rec. = 2.0 ft, Gray, wet, hard, CLAY, low plasticity (CL) [Sample 11D].	31				
50		A-4, SaSi, Rec. = 1.83 ft, Gray, wet, dense, sandy SILT, some black staining (ML) [Sample 12D].	33				
		51.0 ft, Completed boring at 51 ft-bgs in soil. Backfilled with cuttings and sealed with cold patch asphalt upon completion. Hole stopped @ 51.0 ft					
55							

LOG OF BORING CLD BARTON BRIDGE.GPJ VT AOT.GDT 5/1/13

CLD 12-0174 MODEL: BOR02

CONSULTING ENGINEERS

PROJECT NAME: BARTON
PROJECT NUMBER: BRO 1449(31)

FILE NAME: 11j068/cos/z11j068bor.dgn
PROJECT LEADER: J. BYATT
DESIGNED BY: S. BEAUMONT
BORING LOGS (1 OF 4)

PLOT DATE: 7/15/2014
DRAWN BY: M. SMITH
CHECKED BY: J. BYATT
SHEET 23 OF 52

STATE OF VERMONT
AGENCY OF TRANSPORTATION
MATERIALS & RESEARCH SECTION
SUBSURFACE INFORMATION

BORING NUMBER: BB-102
SHEET 1 of 3
DATE STARTED: 2/13/13
DATE COMPLETED: 2/14/13

PROJECT NAME: CLD Roaring Brook Bridge
SITE NAME: Barton, VT
STATION: 42+91.5
OFFSET: RT 4.5'
VTSPG:

PROJECT NUMBER: 123-87464
SITE NUMBER: BRO 1449(31)
GROUND ELEVATION: 1139.0 ft
GROUNDWATER DEPTH: 5.4 ft 2/14/13
PROJECT PIN NUMBER: Barton, VT TH 2 BR 8

BORING CREW
CREW CHIEF:
DRILLER: P. LaBoissier
LOGGER: N. Chinburg

BORING RIG: Mobile B-47 Truck
BORING TYPE: WASH BORE
SAMPLE TYPE: SPLIT BARREL
CHECKED BY: MRH

DEPTH (ft)	SYMBOL	CLASSIFICATION OF MATERIALS (Description)	BLOWS PER FOOT	M.C. (%)	GRAVEL (%)	SAND (%)	FINES (%)	LL (%)	PI (%)
		0.0 ft - 0.5 ft, Asphalt.							
		A-1-B, GrSa, Rec. = 0.25 ft, Dark brown, moist, very dense, fine to coarse SAND and GRAVEL (GW) [Sample 1D].	R						
		A-2-4, GrSa, Rec. = 0.42 ft, Dark brown, moist, very dense, fine to medium SAND, trace coarse sand and gravel (SP) [Sample 2D].	R						
		A-2-4, GrSaSi, Rec. = 1.0 ft, Brown, moist, dense, fine to coarse SAND, more fine sand with depth (SP) [Sample 3D].	49						
5		A-2-4, GrSaSi, Rec. = 0.92 ft, Brown, moist, compact, fine to coarse SAND, some gravel (SP) [Sample 4D].	16						
		7.0 ft - 9.0 ft, Wash in spoon, otherwise no recovery [Sample 5D].							
10		A-6, Cl, Rec. = 1.5 ft, Gray, wet, stiff, CLAY, some fine sand, low plasticity, sand in ~1mm lenses (CL) [Sample 6D].	11	21.0				25	11
15		A-4, ClSi, Rec. = 1.25 ft, Gray, wet, very stiff, clayey SILT, trace fine sand, low plasticity (ML) [Sample 7D].	20						
20		A-4, SaSi, Rec. = 1.08 ft, Gray, wet, very dense, SILT, some fine sand (ML) [Sample 8D].	67		0.0	5.7	94.3		
25		A-4, SaSi, Rec. = 1.25 ft, Gray, wet, very dense, sandy SILT (ML) [Sample 9D].	77						
		28.0 ft - 28.5 ft, Cobble based on drill behavior.							
		Rec. = 0.0 ft, 29.0 ft - 31.0 ft, Some wash in tip of spoon, otherwise no recovery [Sample 10D].	R						

BOTTOM OF ABUT. I
EL. 1130.0'

LOG OF BORING CLD BARTON BRIDGE.GPJ VT AOT.GDT 5/1/13

STATE OF VERMONT
AGENCY OF TRANSPORTATION
MATERIALS & RESEARCH SECTION
SUBSURFACE INFORMATION

BORING NUMBER: BB-102
SHEET 2 of 3
DATE STARTED: 2/13/13
DATE COMPLETED: 2/14/13

PROJECT NAME: CLD Roaring Brook Bridge
SITE NAME: Barton, VT
STATION: 42+91.5
OFFSET: RT 4.5'
VTSPG:

PROJECT NUMBER: 123-87464
SITE NUMBER: BRO 1449(31)
GROUND ELEVATION: 1139.0 ft
GROUNDWATER DEPTH: 5.4 ft 2/14/13
PROJECT PIN NUMBER: Barton, VT TH 2 BR 8

BORING CREW
CREW CHIEF:
DRILLER: P. LaBoissier
LOGGER: N. Chinburg

BORING RIG: Mobile B-47 Truck
BORING TYPE: WASH BORE
SAMPLE TYPE: SPLIT BARREL
CHECKED BY: MRH

DEPTH (ft)	SYMBOL	CLASSIFICATION OF MATERIALS (Description)	BLOWS PER FOOT	M.C. (%)	GRAVEL (%)	SAND (%)	FINES (%)	LL (%)	PI (%)
35		A-4, SaSi, Rec. = 1.25 ft, Gray, wet, very dense, SILT, trace fine sand (ML) [Sample 11D].	59		0.6	3.8	95.6		
40		A-6, SiCl, Rec. = 1.5 ft, Gray, wet, hard, interbedded CLAY and SILT in 1-2" layers, low plasticity (CL-ML) [Sample 12D].	47						
45		A-6, Cl, Rec. = 1.42 ft, Gray, wet, hard, CLAY, some fine sand, low plasticity, sand in ~1mm layers, (CL) [Sample 13D].	36						
50		A-4, ClSi, Rec. = 1.75 ft, Gray, wet, hard, clayey SILT, low plasticity (ML) [Sample 14D].	43						
55									

APPROX.
PILE TIP
EL. 1060.0'

LOG OF BORING CLD BARTON BRIDGE.GPJ VT AOT.GDT 5/1/13

STATE OF VERMONT
AGENCY OF TRANSPORTATION
MATERIALS & RESEARCH SECTION
SUBSURFACE INFORMATION

BORING NUMBER: BB-102
SHEET 3 of 3
DATE STARTED: 2/13/13
DATE COMPLETED: 2/14/13

PROJECT NAME: CLD Roaring Brook Bridge
SITE NAME: Barton, VT
STATION: 42+91.5
OFFSET: RT 4.5'
VTSPG:

PROJECT NUMBER: 123-87464
SITE NUMBER: BRO 1449(31)
GROUND ELEVATION: 1139.0 ft
GROUNDWATER DEPTH: 5.4 ft 2/14/13
PROJECT PIN NUMBER: Barton, VT TH 2 BR 8

BORING CREW
CREW CHIEF:
DRILLER: P. LaBoissier
LOGGER: N. Chinburg

BORING RIG: Mobile B-47 Truck
BORING TYPE: WASH BORE
SAMPLE TYPE: SPLIT BARREL
CHECKED BY: MRH

DEPTH (ft)	SYMBOL	CLASSIFICATION OF MATERIALS (Description)	BLOWS PER FOOT	M.C. (%)	GRAVEL (%)	SAND (%)	FINES (%)	LL (%)	PI (%)
		No samples collected 51-79 ft., 61.0 ft							
65									
70									
75									
80		79.0 ft, Tri-cone refusal, possible bedrock. Backfilled with cuttings and sealed with cold patch asphalt upon completion. Hole stopped @ 79.0 ft							
85									

LOG OF BORING CLD BARTON BRIDGE.GPJ VT AOT.GDT 5/1/13

PROJECT NAME: BARTON
PROJECT NUMBER: BRO 1449(31)

FILE NAME: 11j068/cos/z11j068bor.dgn
PROJECT LEADER: J. BYATT
DESIGNED BY: S. BEAUMONT
BORING LOGS (2 OF 4)

PLOT DATE: 7/15/2014
DRAWN BY: M. SMITH
CHECKED BY: J. BYATT
SHEET 24 OF 52

CLD 12-0174 MODEL: BORO3

STATE OF VERMONT
AGENCY OF TRANSPORTATION
MATERIALS & RESEARCH SECTION
SUBSURFACE INFORMATION

BORING NUMBER: BB-103
SHEET 1 of 3
DATE STARTED: 2/12/13
DATE COMPLETED: 2/12/13

PROJECT NAME: CLD Roaring Brook Bridge
SITE NAME: Barton, VT
STATION: 43+58.5
OFFSET: LT 18.0'
VTSPG:

PROJECT NUMBER: 123-87464
SITE NUMBER: BRO 1449(31)
GROUND ELEVATION: 1139.0 ft
GROUNDWATER DEPTH: 7.6 ft 2/12/13
PROJECT PIN NUMBER: Barton, VT TH 2 BR 8

BORING CREW
CREW CHIEF:
DRILLER: P. LaBoissier
LOGGER: N. Chinburg

BORING RIG: Mobile B-47 Truck
BORING TYPE: WASH BORE
SAMPLE TYPE: SPLIT BARREL
CHECKED BY: MRH

BOTTOM OF ABUT. 2
EL. 1130.0'

DEPTH (ft)	SYMBOL	CLASSIFICATION OF MATERIALS (Description)	BLOWS PER FOOT	M.C. (%)	GRAVEL (%)	SAND (%)	FINES (%)	LL (%)	PI (%)
		A-1-B, GrSa, Rec. = 1.33 ft, Brown, moist, very dense, fine to coarse SAND and GRAVEL (GW) [Sample 1D].	92						
5		A-4, GrSiSa, Rec. = 0.17 ft, Brown-gray, wet, loose, silty fine SAND, some medium sand and gravel, trace clay (SM) [Sample 2D].	7						
10		A-7-5, Cl, Rec. = 1.25 ft, Gray, wet, very stiff, CLAY, trace medium sand, low plasticity (CL) [Sample 3D].	16	31.0				41	21
15		A-7-5, Cl, Rec. = 2.0 ft, Gray, wet, stiff, CLAY, trace gravel and medium sand, high plasticity (CH) [Sample 4D].	14	25.0				52	31
20		A-4, GrSiSa, Rec. = 1.33 ft, Gray, wet, fine SAND and SILT, trace gravel (SM) [Sample 5D].	81		1.7	61.5	36.8		
25		A-4, SiSa, Rec. = 0.92 ft, Gray, wet, very dense, silty fine SAND, layers of medium to coarse sand (ML) [Sample 6D].	R						
		25.4 ft - 27.5 ft, Boulder based on drill behavior.							
		29.0 ft - 33.0 ft, Cored through nested boulders.							

LOG OF BORING CLD BARTON BRIDGE.GPJ VT AOT.GDT 5/1/13

STATE OF VERMONT
AGENCY OF TRANSPORTATION
MATERIALS & RESEARCH SECTION
SUBSURFACE INFORMATION

BORING NUMBER: BB-103
SHEET 2 of 3
DATE STARTED: 2/12/13
DATE COMPLETED: 2/12/13

PROJECT NAME: CLD Roaring Brook Bridge
SITE NAME: Barton, VT
STATION: 43+58.5
OFFSET: LT 18.0'
VTSPG:

PROJECT NUMBER: 123-87464
SITE NUMBER: BRO 1449(31)
GROUND ELEVATION: 1139.0 ft
GROUNDWATER DEPTH: 7.6 ft 2/12/13
PROJECT PIN NUMBER: Barton, VT TH 2 BR 8

BORING CREW
CREW CHIEF:
DRILLER: P. LaBoissier
LOGGER: N. Chinburg

BORING RIG: Mobile B-47 Truck
BORING TYPE: WASH BORE
SAMPLE TYPE: SPLIT BARREL
CHECKED BY: MRH

DEPTH (ft)	SYMBOL	CLASSIFICATION OF MATERIALS (Description)	BLOWS PER FOOT	M.C. (%)	GRAVEL (%)	SAND (%)	FINES (%)	LL (%)	PI (%)
35		34.0 ft - 36.0 ft, Wash, otherwise no recovery [Sample 7D].							
40		A-4, SiCl, Rec. = 2.0 ft, Gray, wet, hard, silty CLAY, trace fine sand, low plasticity (CL) [Sample 8D].	39	25.0				24	7
45		A-4, SiCl, Rec. = 2.0 ft, Gray, wet, hard, silty CLAY, some fine sand, low plasticity, sand in ~1mm lenses (CL) [Sample 9D].	41						
50									
55									

APPROX.
PILE TIP
EL. 1061.0'

LOG OF BORING CLD BARTON BRIDGE.GPJ VT AOT.GDT 5/1/13

STATE OF VERMONT
AGENCY OF TRANSPORTATION
MATERIALS & RESEARCH SECTION
SUBSURFACE INFORMATION

BORING NUMBER: BB-103
SHEET 3 of 3
DATE STARTED: 2/12/13
DATE COMPLETED: 2/12/13

PROJECT NAME: CLD Roaring Brook Bridge
SITE NAME: Barton, VT
STATION: 43+58.5
OFFSET: LT 18.0'
VTSPG:

PROJECT NUMBER: 123-87464
SITE NUMBER: BRO 1449(31)
GROUND ELEVATION: 1139.0 ft
GROUNDWATER DEPTH: 7.6 ft 2/12/13
PROJECT PIN NUMBER: Barton, VT TH 2 BR 8

BORING CREW
CREW CHIEF:
DRILLER: P. LaBoissier
LOGGER: N. Chinburg

BORING RIG: Mobile B-47 Truck
BORING TYPE: WASH BORE
SAMPLE TYPE: SPLIT BARREL
CHECKED BY: MRH

DEPTH (ft)	SYMBOL	CLASSIFICATION OF MATERIALS (Description)	BLOWS PER FOOT	M.C. (%)	GRAVEL (%)	SAND (%)	FINES (%)	LL (%)	PI (%)
		No samples collected 46-78 ft., 60.0 ft							
65									
70									
75									
80		78.0 ft, Tri-cone refusal, possible bedrock. Backfilled with cuttings upon completion. Hole stopped @ 78.0 ft							
85									

LOG OF BORING CLD BARTON BRIDGE.GPJ VT AOT.GDT 5/1/13

PROJECT NAME: BARTON
PROJECT NUMBER: BRO 1449(31)

FILE NAME: 11j068/cos/z11j068bor.dgn
PROJECT LEADER: J. BYATT
DESIGNED BY: S. BEAUMONT
BORING LOGS (3 OF 4)

PLOT DATE: 7/15/2014
DRAWN BY: M. SMITH
CHECKED BY: J. BYATT
SHEET 25 OF 52

CLD 12-0174 MODEL: BOR04

STATE OF VERMONT
AGENCY OF TRANSPORTATION
MATERIALS & RESEARCH SECTION
SUBSURFACE INFORMATION

BORING NUMBER: BB-104
SHEET 1 of 2
DATE STARTED: 2/13/13
DATE COMPLETED: 2/13/13

PROJECT NAME: CLD Roaring Brook Bridge
SITE NAME: Barton, VT
STATION: 43+63.0
OFFSET: RT 2.5'
VTSPG:

PROJECT NUMBER: 123-87464
SITE NUMBER: BRO 1449(31)
GROUND ELEVATION: 1139.0 ft
GROUNDWATER DEPTH: NM
PROJECT PIN NUMBER: Barton, VT TH 2 BR 8

BORING CREW
CREW CHIEF:
DRILLER: P. LaBoissier
LOGGER: N. Chinburg

BORING RIG: Mobile B-47 Truck
BORING TYPE: WASH BORE
SAMPLE TYPE: SPLIT BARREL
CHECKED BY: MRH

DEPTH (ft)	SYMBOL	CLASSIFICATION OF MATERIALS (Description)	BLOWS PER FOOT	M.C. (%)	GRAVEL (%)	SAND (%)	FINES (%)	LL (%)	PI (%)
		0.0 ft - 0.5 ft, Asphalt.							
		A-1-B, GrSa, Rec. = 0.5 ft, Brown, moist, very dense, fine to coarse SAND and GRAVEL (GW) [Sample 1D].	R						
5		A-4, GrSaSi, Rec. = 1.17 ft, Brown-gray, wet, very dense, fine SAND and SILT ,some clay, some coarse sand and fine gravel, clay in ~1-2" layer near bottom of spoon (ML) [Sample 2D].	64		0.9	42.2	56.9		
		A-4, GrSaSi, Rec. = 0.92 ft, Brown-gray, wet, compact, fine SAND, some silt, trace gravel, trace organics (wood) (SM) [Sample 3D].	R						
		6.3 ft - 7.0 ft, Cobble based on drill behavior.							
10		A-4, SaSi, Rec. = 1.5 ft, Brown, wet, compact, fine SAND and SILT, trace gravel (SM) [Sample 4D - Top 5"].	27						
		A-7-5, SiCl, Gray, wet, very stiff, CLAY, some silt, low plasticity (CL) [Sample 4D - Bottom 13"].							
15		A-7-5, SiCl, Rec. = 1.67 ft, Gray, wet, very stiff, silty CLAY, ~1mm lenses of fine sand, low plasticity (CL) [Sample 5D].	17	31.0				50	28
20		Rec. = 0.0 ft, 19.0 ft - 20.0 ft, Boulder based on drill behavior.	R						
25		Rec. = 0.08 ft, 24.0 ft - 25.5 ft, Broken rock in spoon tip, no recovery, possibly pushing cobble [Sample 6D].	R						
		25.5 ft - 28.5 ft, Cored through nested boulders.							
		A-4, SiSa, Rec. = 0.25 ft, Brown-gray, wet, very dense, fine SAND and SILT (ML) [Sample 7D]. Low recovery.	R						

BOTTOM OF
ABUT. 2
EL. 1130.0'

LOG OF BORING CLD BARTON BRIDGE.GPJ VT AOT.GDT 5/1/13

STATE OF VERMONT
AGENCY OF TRANSPORTATION
MATERIALS & RESEARCH SECTION
SUBSURFACE INFORMATION

BORING NUMBER: BB-104
SHEET 2 of 2
DATE STARTED: 2/13/13
DATE COMPLETED: 2/13/13

PROJECT NAME: CLD Roaring Brook Bridge
SITE NAME: Barton, VT
STATION: 43+63.0
OFFSET: RT 2.5'
VTSPG:

PROJECT NUMBER: 123-87464
SITE NUMBER: BRO 1449(31)
GROUND ELEVATION: 1139.0 ft
GROUNDWATER DEPTH: NM
PROJECT PIN NUMBER: Barton, VT TH 2 BR 8

BORING CREW
CREW CHIEF:
DRILLER: P. LaBoissier
LOGGER: N. Chinburg

BORING RIG: Mobile B-47 Truck
BORING TYPE: WASH BORE
SAMPLE TYPE: SPLIT BARREL
CHECKED BY: MRH

DEPTH (ft)	SYMBOL	CLASSIFICATION OF MATERIALS (Description)	BLOWS PER FOOT	M.C. (%)	GRAVEL (%)	SAND (%)	FINES (%)	LL (%)	PI (%)
		broken rock pieces in spoon tip.							
		29.4 ft - 32.0 ft, Boulder based on drill behavior. Hole collapsed to 28 ft.							
35		A-6, SiCl, Rec. = 0.67 ft, Gray, wet, hard, CLAY, some fine sand, trace coarse gravel, low plasticity, sand in ~1mm layers (CL) [Sample 8D].	35	21.0				36	17
		37.0 ft - 38.0 ft, Boulder based on drill behavior.							
40		A-6, SiSa, Rec. = 0.67 ft, Gray, wet, fine SAND, some silt (ML) [Sample 9D].	R						
		41.0 ft, Completed hole at 41 ft -bgs in soil. Backfilled with cuttings and sealed with cold patch asphalt upon completion.							
		Hole stopped @ 41.0 ft							
45									
50									
55									

LOG OF BORING CLD BARTON BRIDGE.GPJ VT AOT.GDT 5/1/13

CLD 12-0174 MODEL: BORO5

CONSULTING ENGINEERS

PROJECT NAME: BARTON
PROJECT NUMBER: BRO 1449(31)

FILE NAME: 11j068/cos/z11j068bor.dgn
PROJECT LEADER: J. BYATT
DESIGNED BY: S. BEAUMONT
BORING LOGS (4 OF 4)

PLOT DATE: 7/15/2014
DRAWN BY: M. SMITH
CHECKED BY: J. BYATT
SHEET 26 OF 52

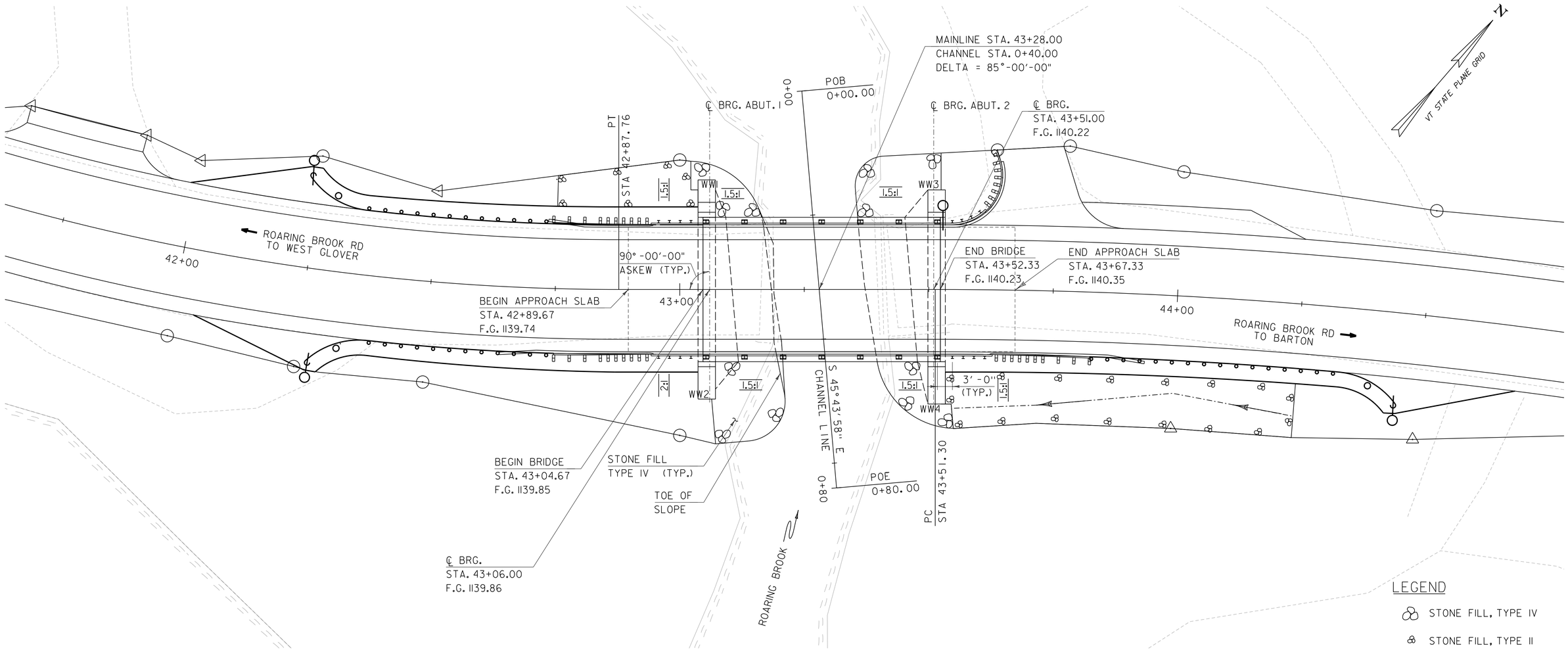

PLAN VIEW

SCALE: 1" = 10'-0"

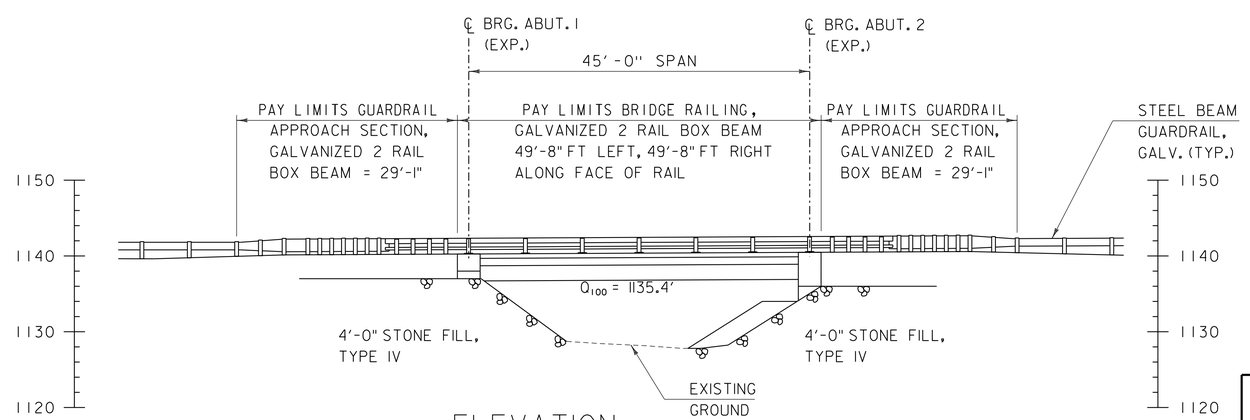

ELEVATION

SCALE: 1" = 10'-0"

0 10 20
(SCALE 1" = 10')

PROJECT NAME: BARTON
PROJECT NUMBER: BRO 1449(31)

CONSULTING ENGINEERS
540 Commercial Street, Manchester, NH 03101
(603) 668-8223 • Fax: (603) 668-8802
cld@cldengineers.com • www.cldengineers.com
Maine • New Hampshire • Vermont

FILE NAME: 11j068/cos/z11j068pe.dgn
PROJECT LEADER: J. BYATT
DESIGNED BY: S. BEAUMONT
BRIDGE PLAN AND ELEVATION

PLOT DATE: 7/15/2014
DRAWN BY: M. SMITH
CHECKED BY: J. BYATT
SHEET 27 OF 52

CLD 12-0174 MODEL: PE01

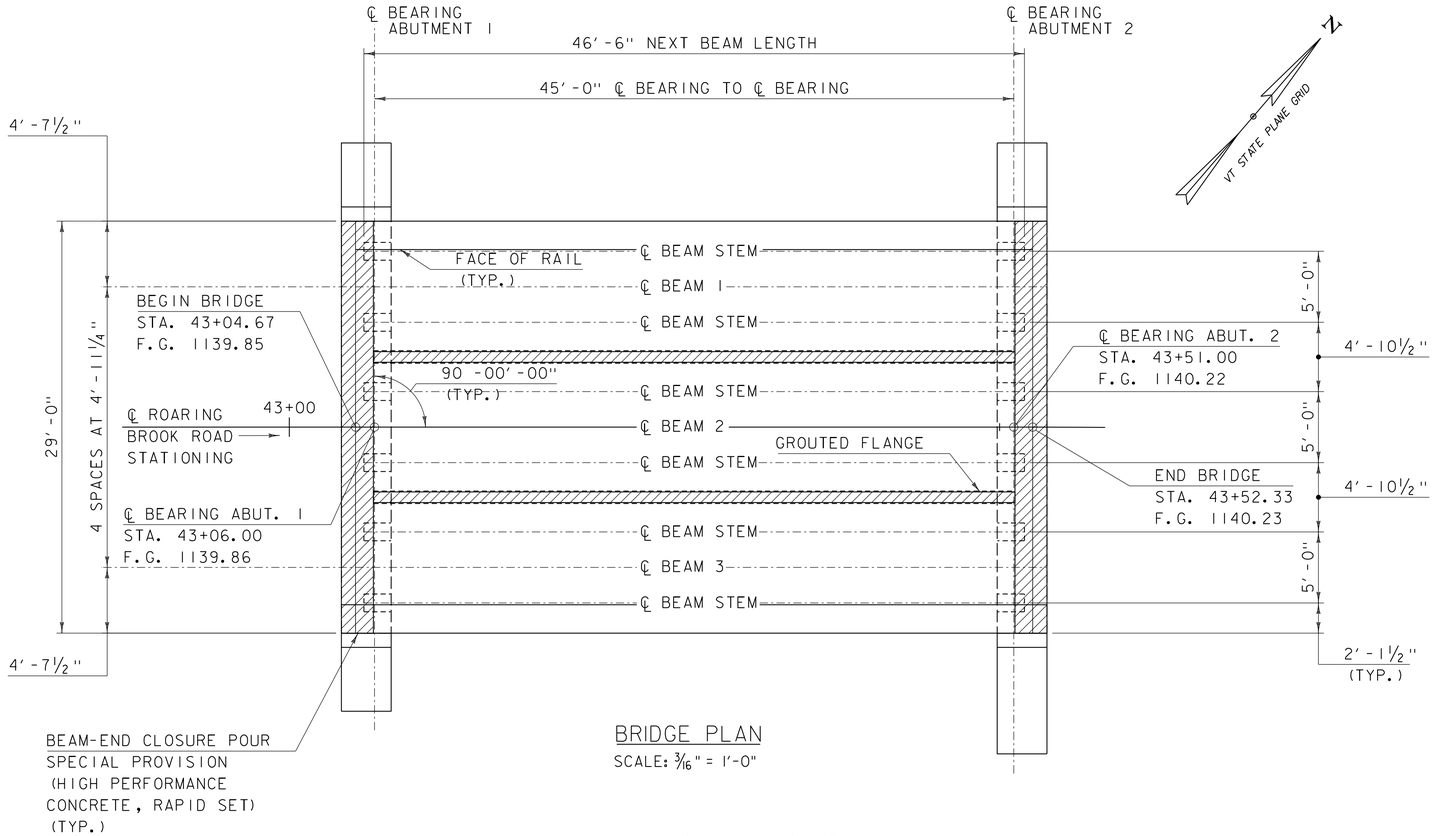

BRIDGE PLAN

SCALE: 3/16" = 1'-0"

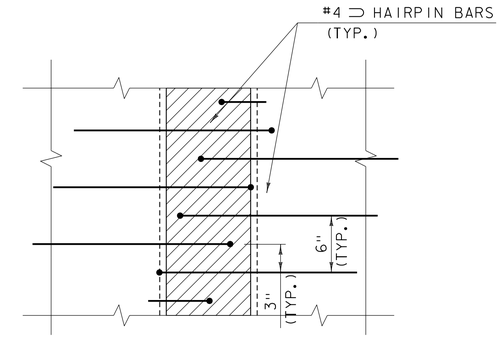

CONNECTION DETAIL PLAN

SCALE: 1½" = 1'-0"

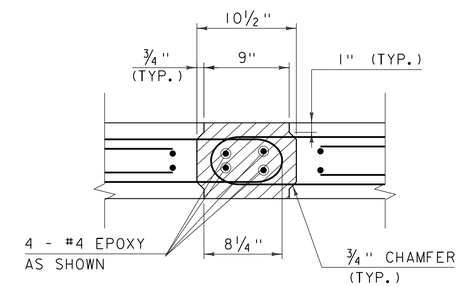

CONNECTION DETAIL SECTION

SCALE: 1½" = 1'-0"

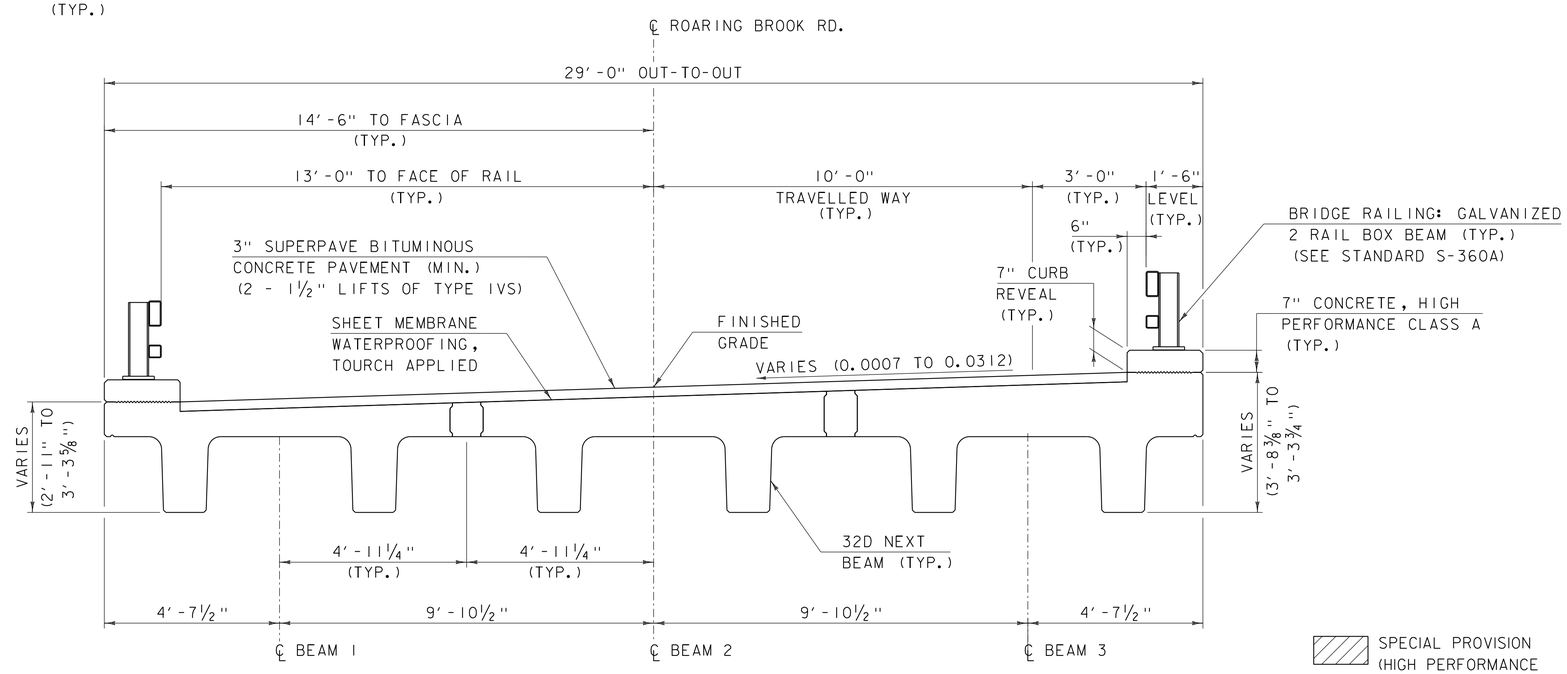

TYPICAL BRIDGE SECTION

SCALE: ½" = 1'-0"

SPECIAL PROVISION (HIGH PERFORMANCE CONCRETE, RAPID SET) (TYP.)

CLD 12-0121 MODEL: SUP02

PROJECT NAME: BARTON	
PROJECT NUMBER: BRO 1449(31)	
FILE NAME: z11j068sup.dgn	PLOT DATE: 7/15/2014
PROJECT LEADER: J. BYATT	DRAWN BY: M. SMITH
DESIGNED BY: S. BEAUMONT	CHECKED BY: J. BYATT
BRIDGE PLAN AND TYPICAL SECTIONS	SHEET 28 OF 52

CLD CONSULTING ENGINEERS

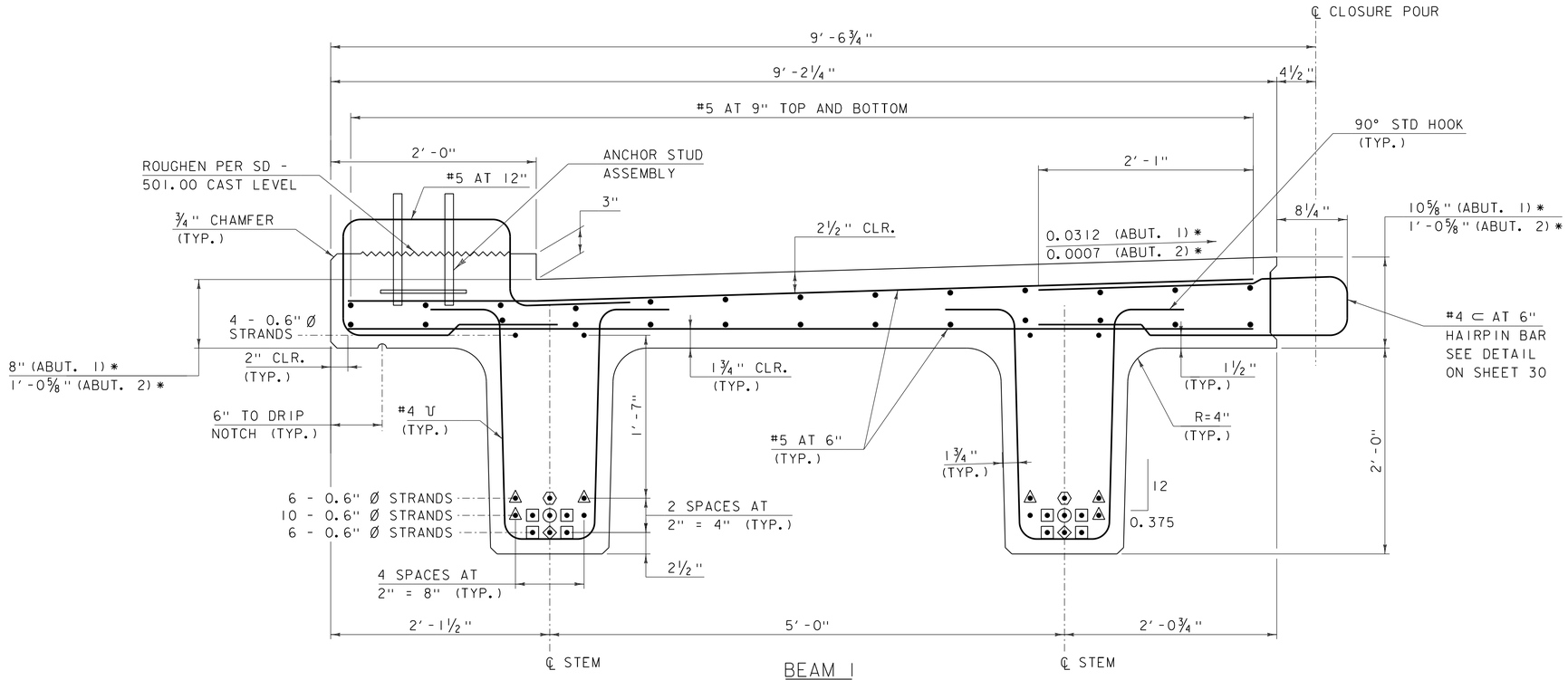

BEAM 1

SCALE: 1½" = 1'-0"

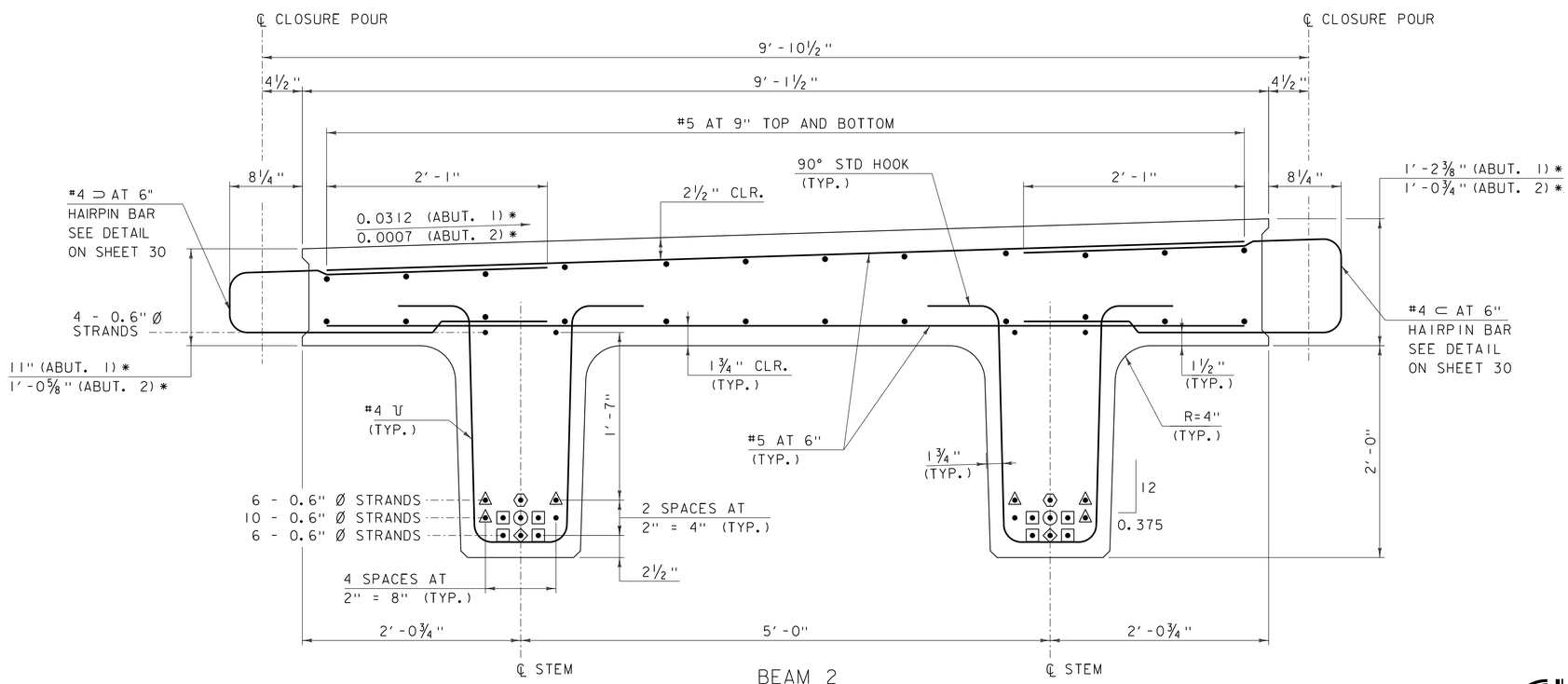

BEAM 2

SCALE: 1½" = 1'-0"

* DIMENSIONS TAKEN AT BEGIN AND END BEAM FLANGE AT ABUTMENT 1 AND 2, RESPECTIVELY. TRANSITION SLOPES AND DIMENSIONS BETWEEN THE TWO LOCATIONS.

◇ DENOTES STRAND DEBONDED 8'-0" FROM EACH END OF BEAM

○ DENOTES STRAND DEBONDED 4'-0" FROM EACH END OF BEAM

⬡ DENOTES STRAND DEBONDED 2'-0" FROM EACH END OF BEAM

△ DENOTES STRAND DEBONDED 6" FROM EACH END OF BEAM

□ DENOTES FULLY BONDED STRAND EXTENDED 2'-0" FROM BEAM END

PROJECT NAME: BARTON	
PROJECT NUMBER: BRO 1449(31)	
FILE NAME: z11j068sup.dgn	PLOT DATE: 7/15/2014
PROJECT LEADER: J. BYATT	DRAWN BY: M. SMITH
DESIGNED BY: S. BEAUMONT	CHECKED BY: J. BYATT
NEXT BEAM DETAILS (1 OF 3)	SHEET 29 OF 52

CONSULTING ENGINEERS

CLD 12-0121 MODEL: SUP03

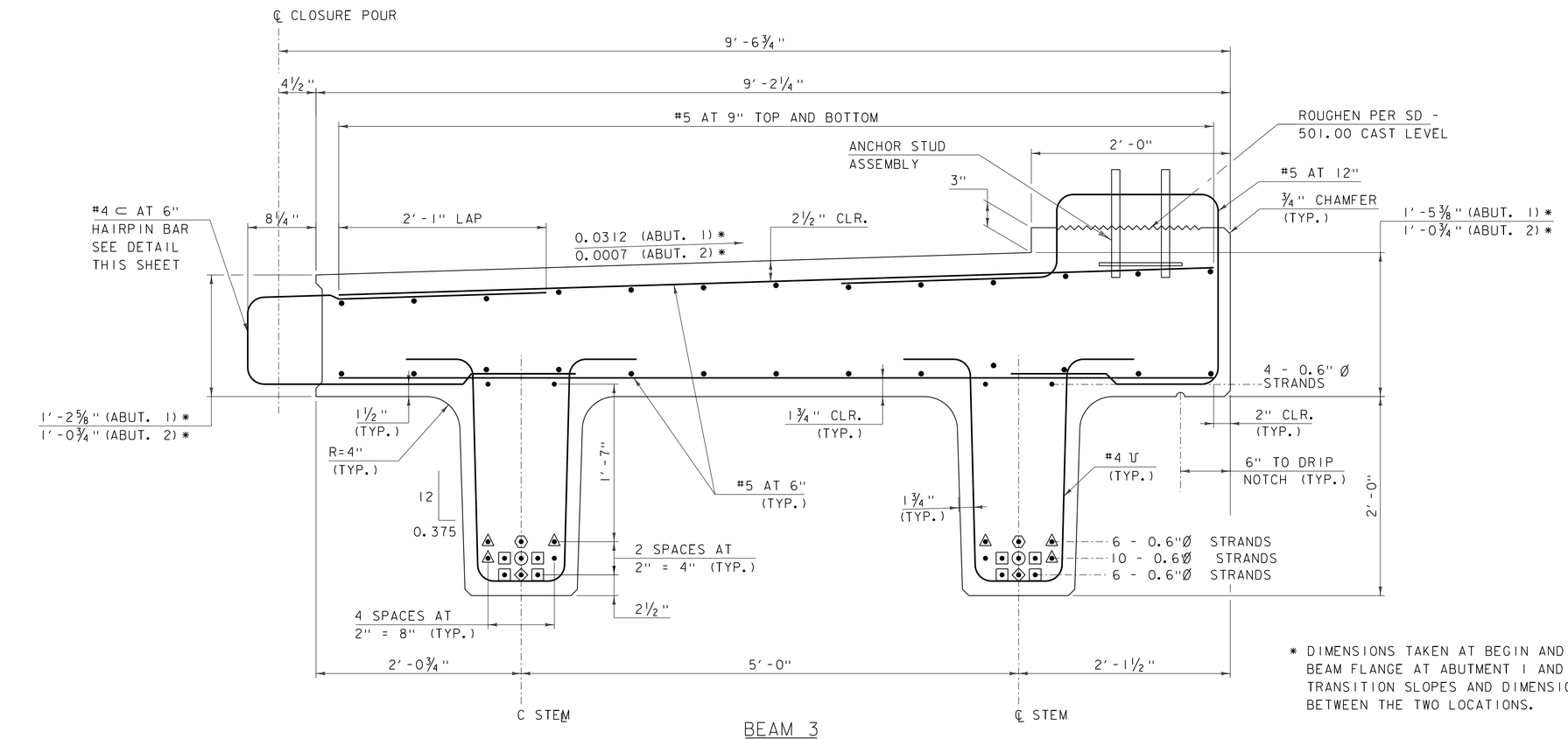

BEAM 3

SCALE: 1½" = 1'-0"

* DIMENSIONS TAKEN AT BEGIN AND END BEAM FLANGE AT ABUTMENT 1 AND 2. TRANSITION SLOPES AND DIMENSIONS BETWEEN THE TWO LOCATIONS.

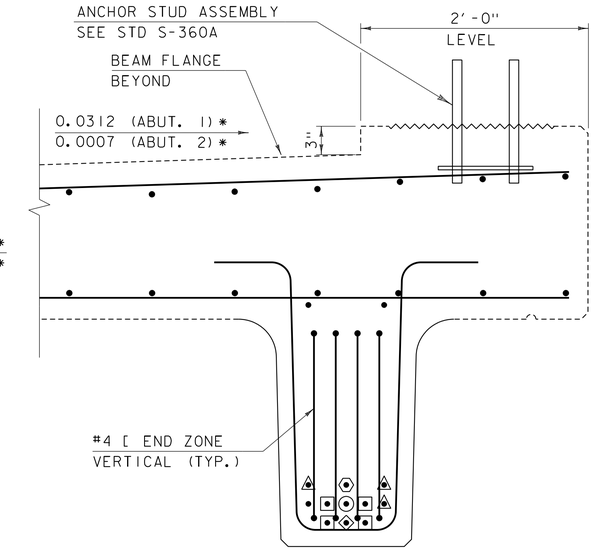

END SECTION DETAIL

SCALE: 1½" = 1'-0"

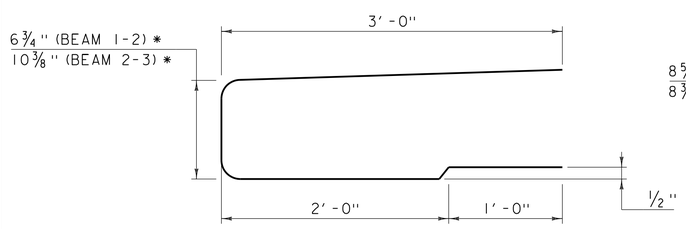

HAIRPIN BAR DETAIL AT ABUTMENT 1

SCALE: 1½" = 1'-0"

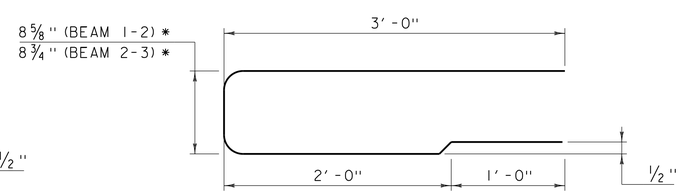

HAIRPIN BAR DETAIL AT ABUTMENT 2

SCALE: 1½" = 1'-0"

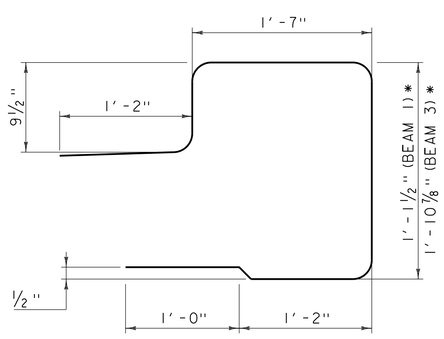

CURB BAR DETAIL AT ABUTMENT 1

SCALE: 1½" = 1'-0"

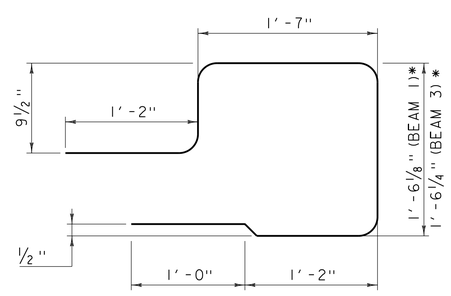

CURB BAR DETAIL AT ABUTMENT 2

SCALE: 1½" = 1'-0"

◇ DENOTES STRAND DEBONDED 8'-0" FROM EACH END OF BEAM

○ DENOTES STRAND DEBONDED 4'-0" FROM EACH END OF BEAM

⬡ DENOTES STRAND DEBONDED 2'-0" FROM EACH END OF BEAM

△ DENOTES STRAND DEBONDED 6" FROM EACH END OF BEAM

□ DENOTES FULLY BONDED STRAND EXTENDED 2'-0" FROM BEAM END

* HAIRPIN AND CURB BAR DIMENSIONS ARE TAKEN AT BEGIN AND END BEAM FLANGE AT ABUTMENT 1 AND 2, RESPECTIVELY. TRANSITION SLOPES AND DIMENSIONS BETWEEN THE TWO LOCATIONS.

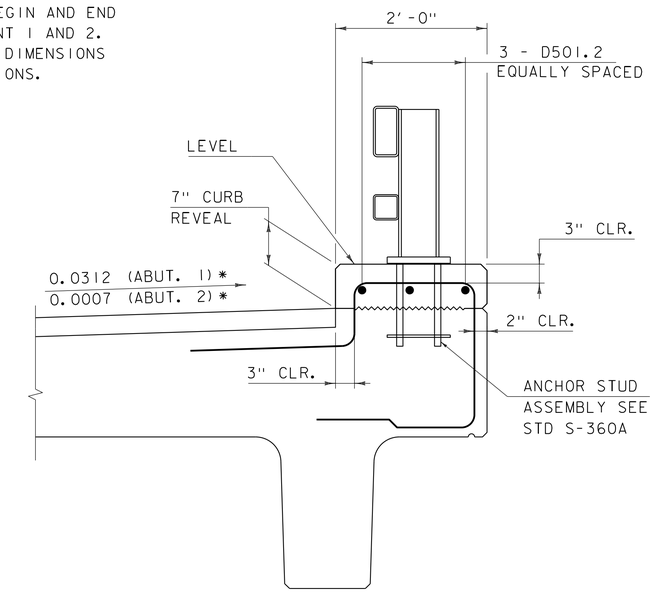

CURB SECTION

SCALE: 1" = 1'-0"

PROJECT NAME: BARTON	
PROJECT NUMBER: BRO 1449(31)	
FILE NAME: z11j068sup.dgn	PLOT DATE: 7/15/2014
PROJECT LEADER: J. BYATT	DRAWN BY: M. SMITH
DESIGNED BY: S. BEAUMONT	CHECKED BY: J. BYATT
NEXT BEAM DETAILS (2 OF 3)	SHEET 30 OF 52

CONSULTING ENGINEERS

MODEL: SUP04

CLD 12-0121

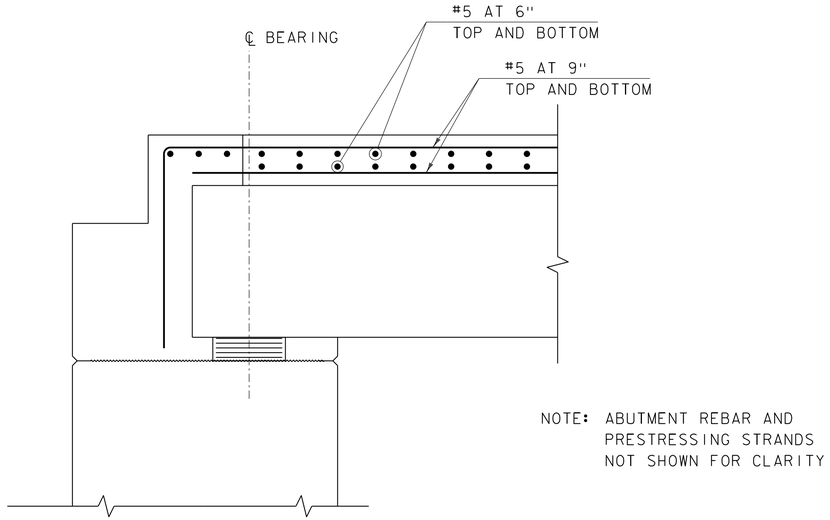

TYPICAL DECK REINFORCING AT BEAM END

SCALE: 1" = 1'-0"

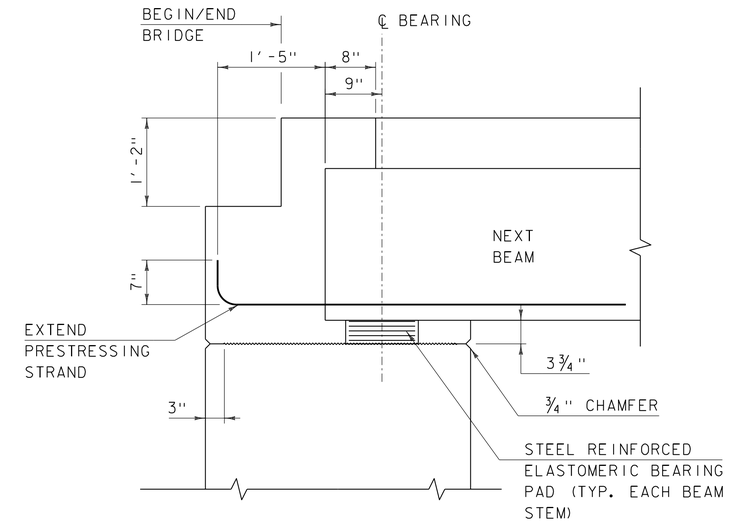

TYPICAL BEAM END DETAIL

SCALE: 1" = 1'-0"

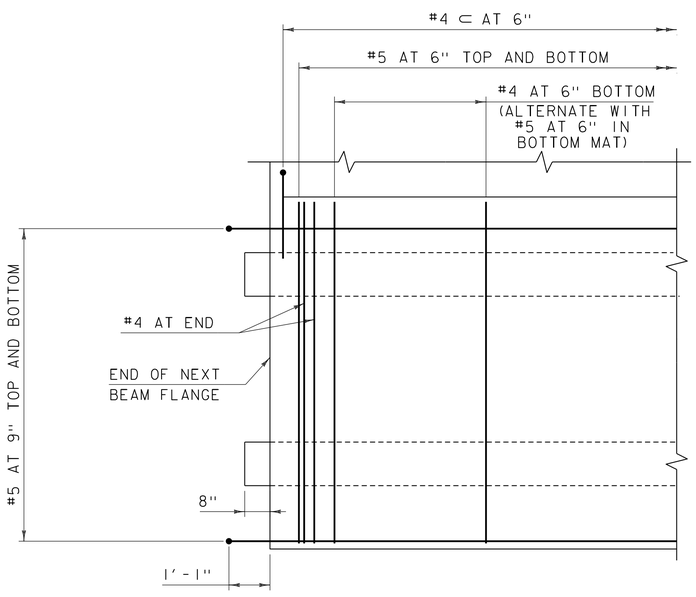

PARTIAL BEAM FLANGE PLAN

SCALE: ½" = 1'-0"

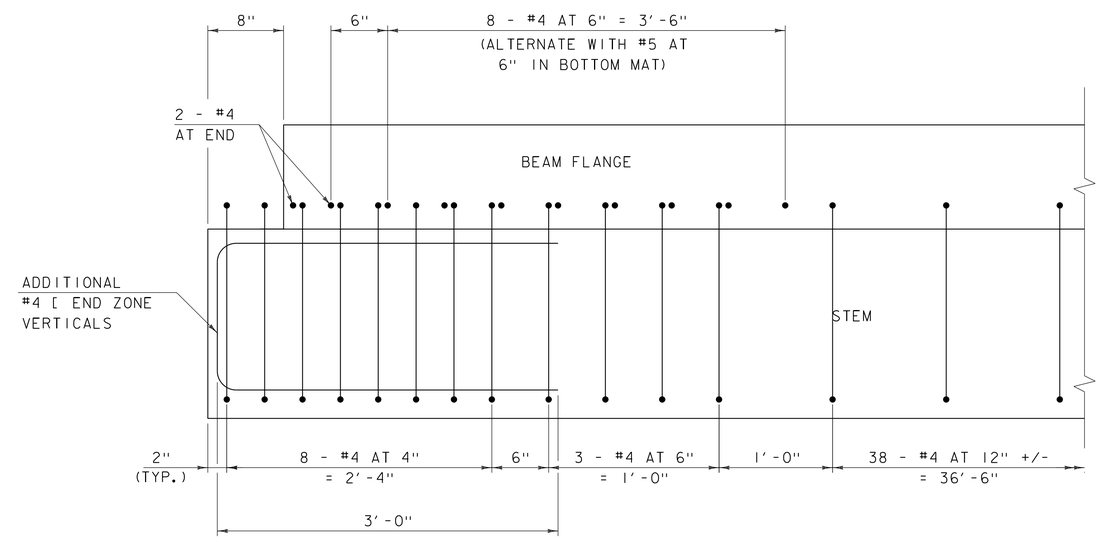

LONGITUDINAL SECTION

SCALE: 1½" = 1'-0"

PROJECT NAME: BARTON	
PROJECT NUMBER: BRO 1449(31)	
FILE NAME: z11j068sup.dgn	PLOT DATE: 7/15/2014
PROJECT LEADER: J. BYATT	DRAWN BY: M. SMITH
DESIGNED BY: N. CARON	CHECKED BY: J. BYATT
NEXT BEAM DETAILS (3 OF 3)	SHEET 31 OF 52

CLD CONSULTING ENGINEERS

CLD 12-0121 MODEL: SUP05

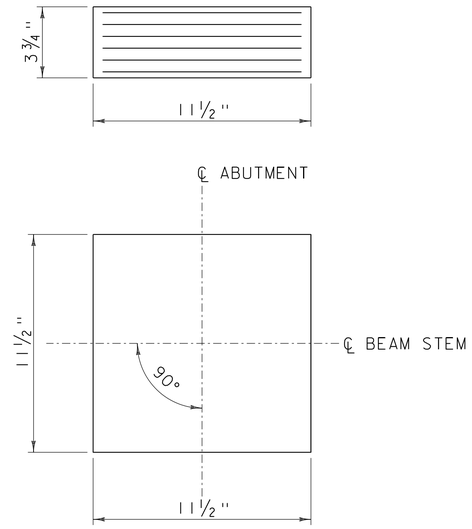

ELASTOMERIC BEARING DETAIL

SCALE: 3" = 1'-0"

2 - ¼" EXTERIOR LAYERS OF ELASTOMER
5 - ½" INTERIOR LAYERS OF ELASTOMER
6 - ⅛" STEEL REINFORCING PLATES

BEARING NOTES

1. BEARING SHALL CONFORM TO THE APPLICABLE SUBSECTIONS OF SECTIONS 531 AND 731 AND WILL BE PAID FOR UNDER CONTRACT ITEM 531.17.

2. ALL REINFORCEMENT BETWEEN LAYERS OF ELASTOMER SHALL BE STEEL MEETING THE REQUIREMENTS OF SUBSECTION 714.02. ALL INTERNAL STEEL PLATES SHALL BE SAND BLASTED AND FREE OF COATINGS, RUST AND MILL SCALE. THE PLATES SHALL BE FREE OF SHARP EDGES AND BURRS.

3. STEEL REINFORCED ELASTOMERIC BEARINGS SHALL HAVE A MINIMUM ¼" EDGE SEAL OF ELASTOMER INTEGRAL WITH BEARING OVER ALL INTERNAL PLATES.

4. THE ELASTOMER WAS DESIGNED WITH A SHEAR MODULUS RANGE OF 130 PSI - 200 PSI.

5. THE ELASTOMER SHALL MEET THE REQUIREMENTS OF LOW TEMPERATURE ZONE D, GRADE 4.

6. THE CONTRACTOR IS ADVISED TO HAVE A MINIMUM OF 16 - ¼" x 12½" x 12½" GALVANIZED STEEL SHIMS AVAILABLE FOR ELEVATION ADJUSTMENTS UPON THE SETTING OF THE SUPERSTRUCTURE UNITS. THE SHIMS SHALL BE FABRICATED ACCORDING TO SECTION 531 AND SHALL BE INCLUDED IN THE UNIT BID PRICE FOR CONTRACT ITEM 531.17.

7. DESIGN SERVICE LOADS PER BEARING: (DESIGN METHOD A)
   MAX DEAD LOAD: 34.1 K
   MAX LIVE LOAD: 31.7 K

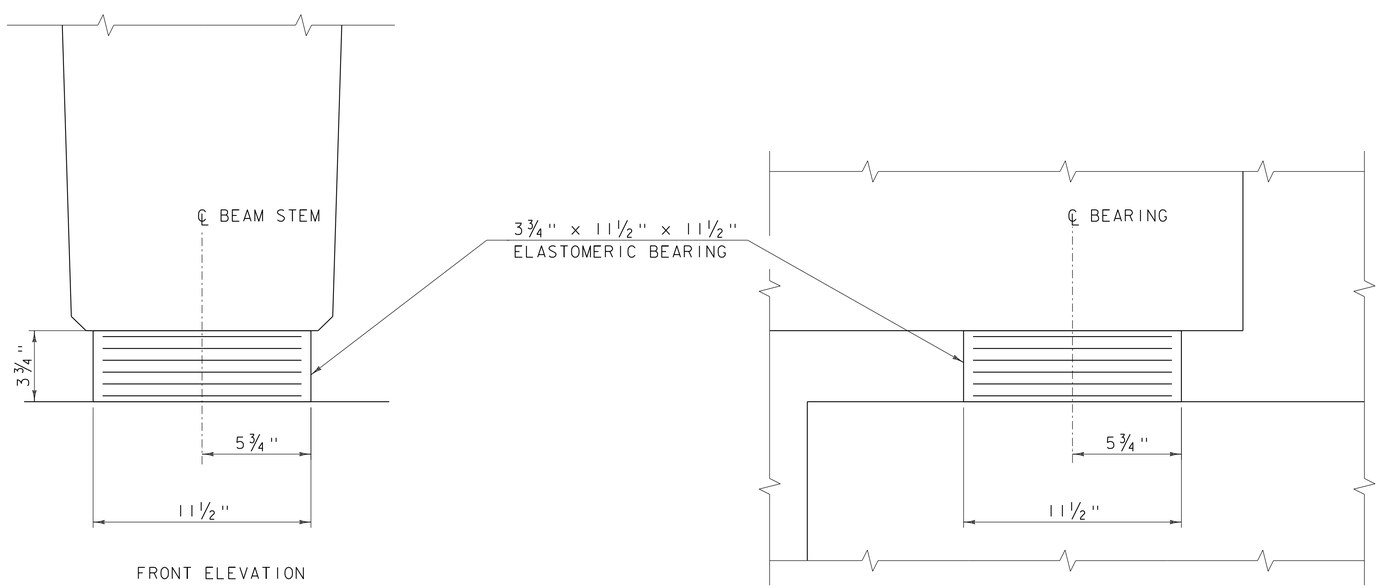

FRONT ELEVATION

SIDE ELEVATION

ELASTOMERIC BEARING DETAIL

SCALE: 3" = 1'-0"

PROJECT NAME: BARTON	
PROJECT NUMBER: BRO 1449(31)	
FILE NAME: z11j068sup.dgn	PLOT DATE: 7/15/2014
PROJECT LEADER: J. BYATT	DRAWN BY: M. SMITH
DESIGNED BY: S. BEAUMONT	CHECKED BY: J. BYATT
BEARING DETAILS	SHEET 32 OF 52

CLD 12-0121 MODEL: SUP06

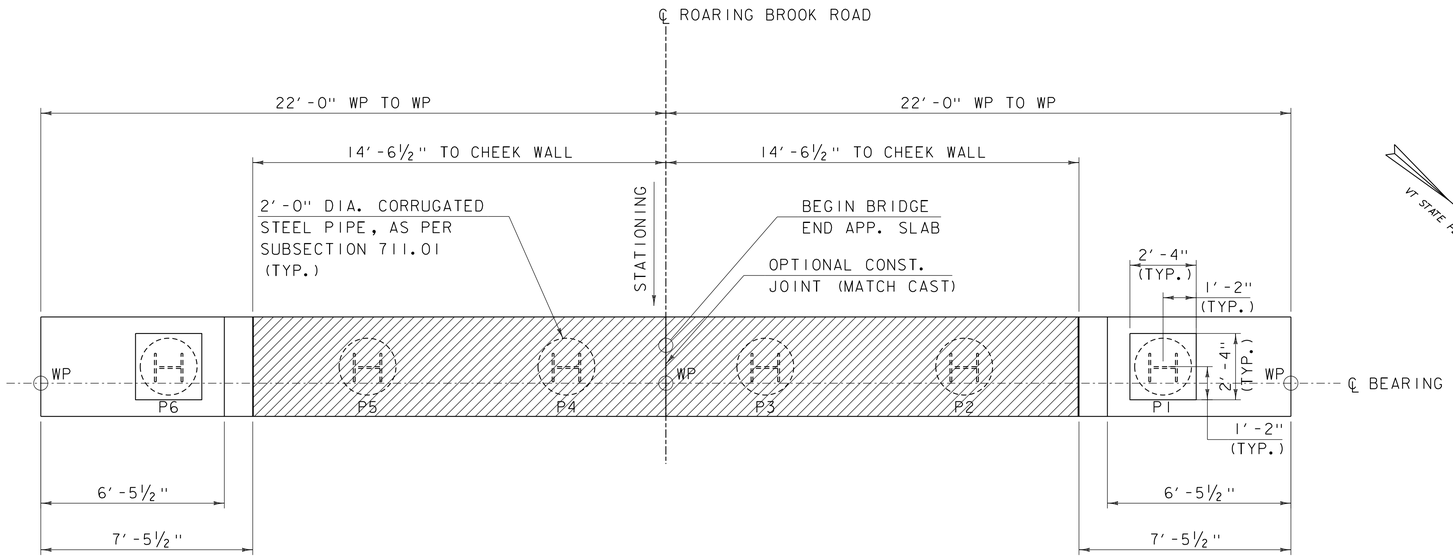

ABUTMENT I PLAN (PCU I)

SCALE: ⅜" = 1'-0"

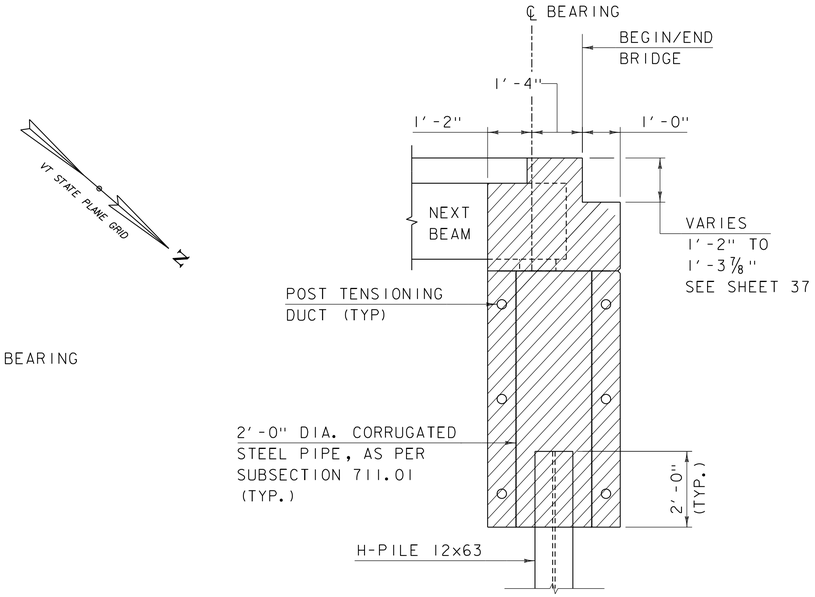

ABUTMENT TYPICAL

SCALE: ½" = 1'-0"

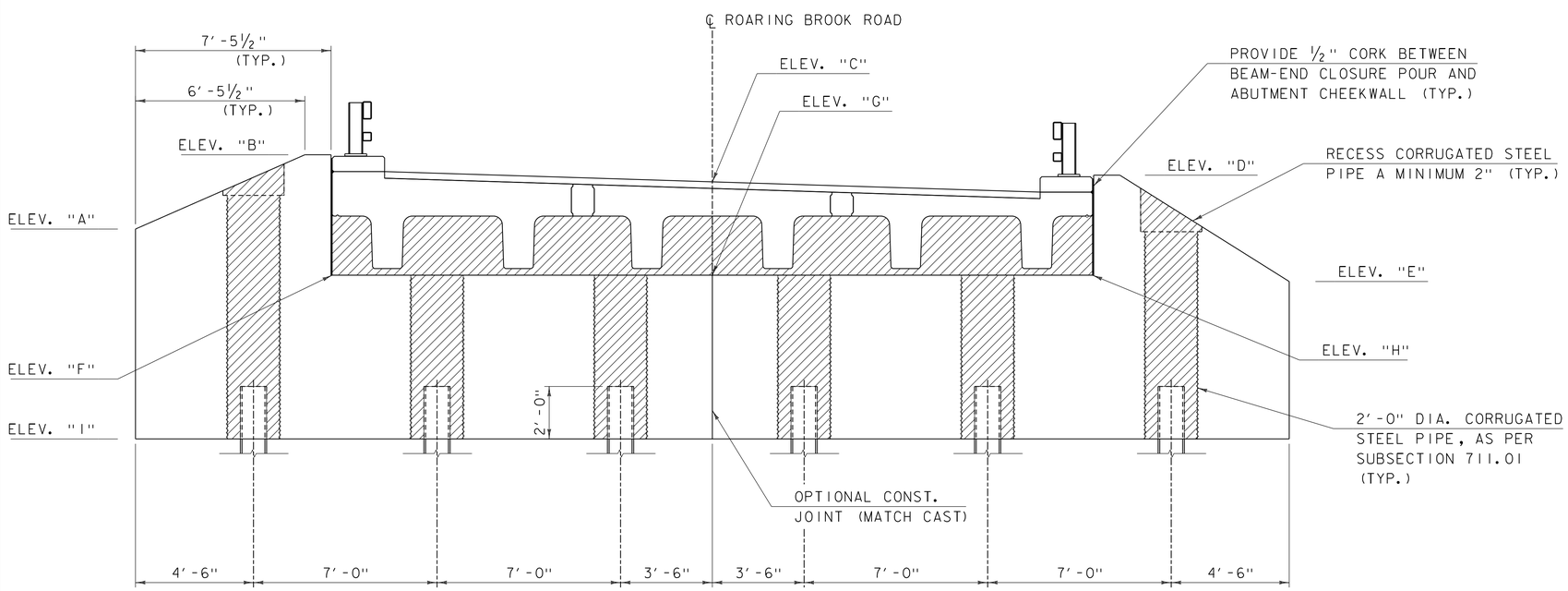

ABUTMENT I ELEVATION (PCU I)

SCALE: ⅜" = 1'-0"

PCU ELEVATIONS

	AB1
ELEV "A"	1138.00
ELEV "B"	1140.83
ELEV "C"	1139.86
ELEV "D"	1140.05
ELEV "E"	1136.00
ELEV "F"	1136.24
ELEV "G"	1136.24
ELEV "H"	1136.24
ELEV "I"	1130.00

NOTE: ELEVATIONS ARE AT CENTERLINE BEARING

SPECIAL PROVISION (HIGH PERFORMANCE CONCRETE, RAPID SET) (TYP.)

CONSULTING ENGINEERS

PROJECT NAME: BARTON
PROJECT NUMBER: BRO 1449(31)

FILE NAME: z11j068abut1.dgn
PROJECT LEADER: J. BYATT
DESIGNED BY: S. BEAUMONT
ABUTMENT I PLAN

PLOT DATE: 7/15/2014
DRAWN BY: M. SMITH
CHECKED BY: J. BYATT
SHEET 33 OF 52

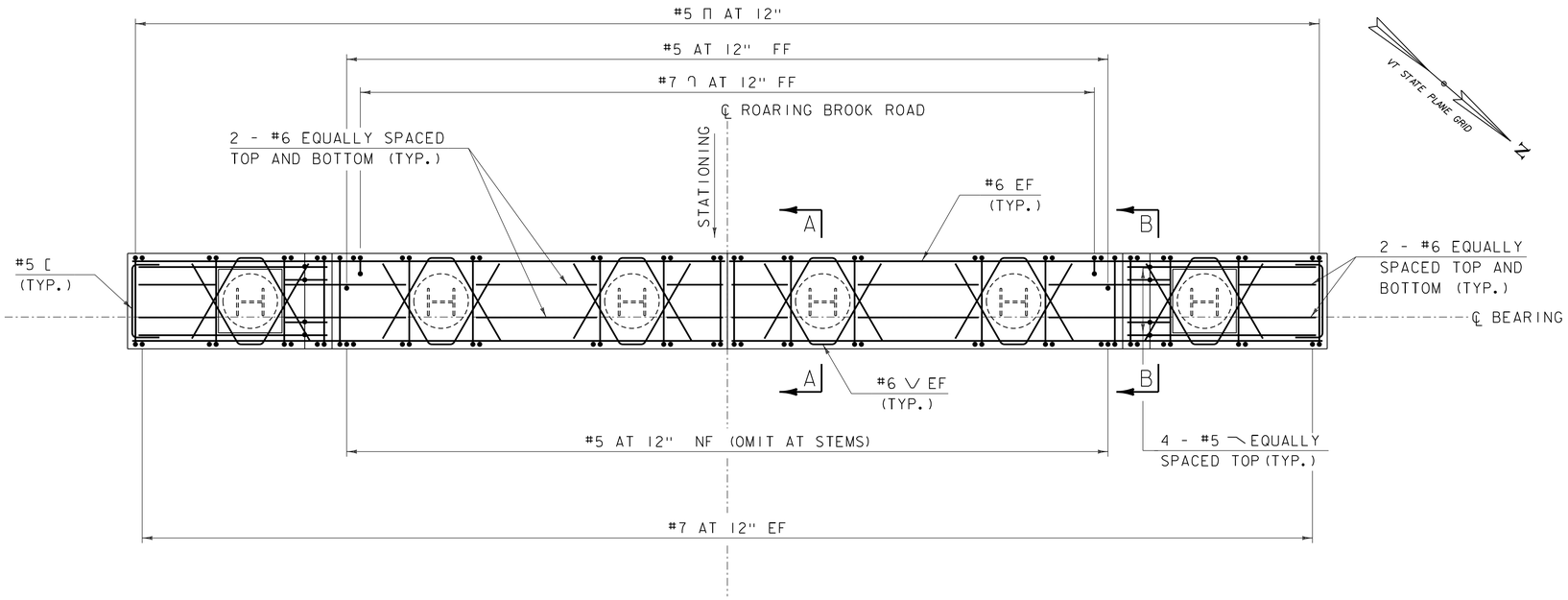

ABUTMENT 1 REINFORCING PLAN (PCU 1)

SCALE: 3/8" = 1'-0"

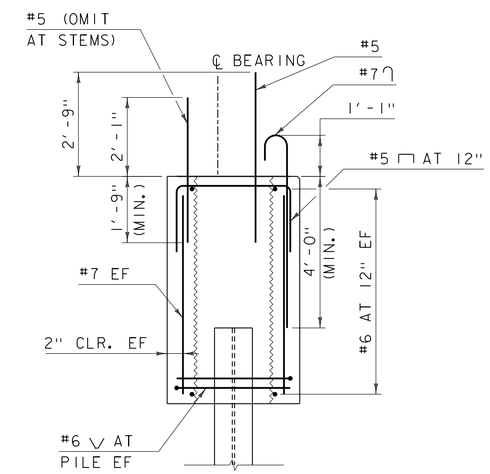

SECTION A-A

SCALE: 1/2" = 1'-0"

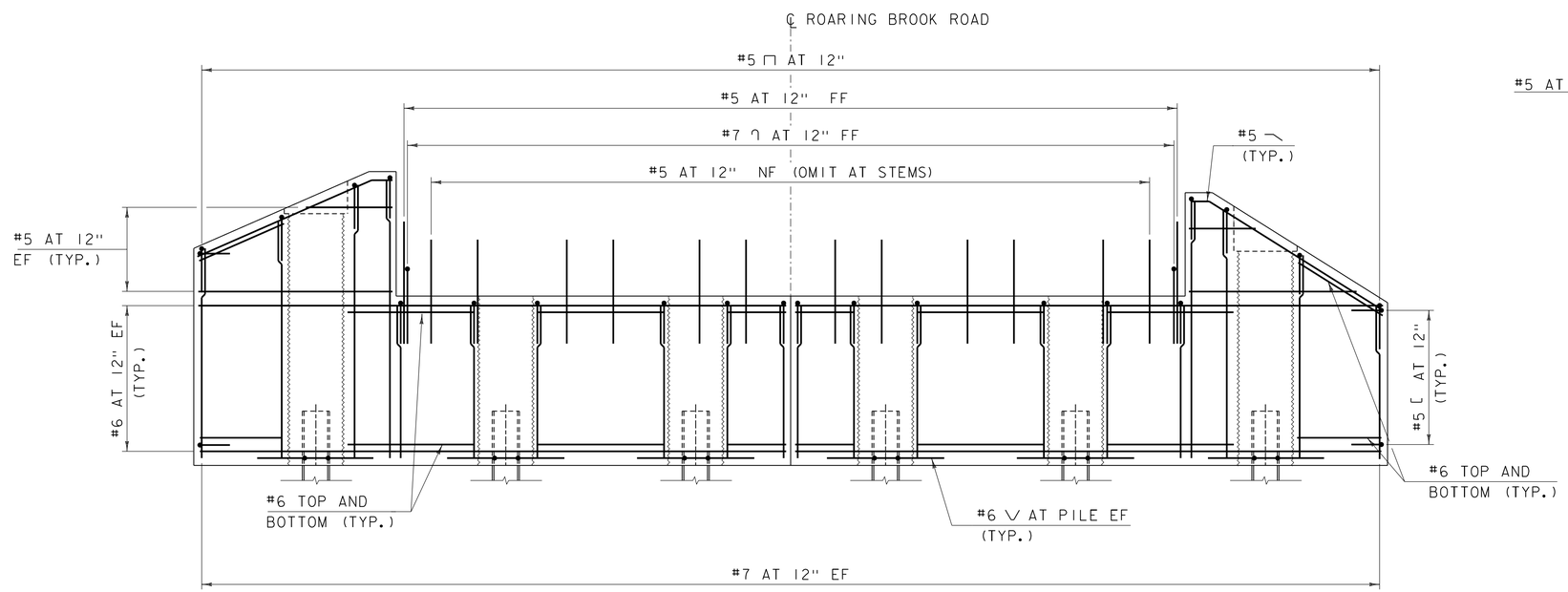

ABUTMENT 1 REINFORCING ELEVATION (PCU 1)

SCALE: 3/8" = 1'-0"

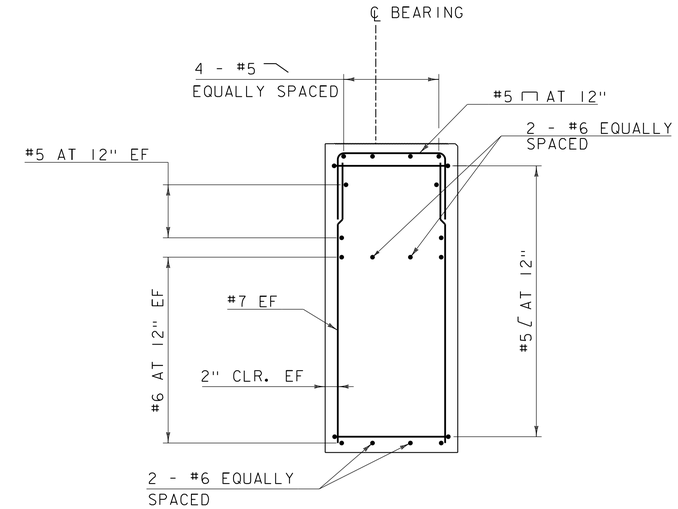

SECTION B-B

SCALE: 1/2" = 1'-0"

PROJECT NAME: BARTON	
PROJECT NUMBER: BRO 1449(31)	
FILE NAME: z11j068abut1.dgn	PLOT DATE: 7/15/2014
PROJECT LEADER: J. BYATT	DRAWN BY: M. SMITH
DESIGNED BY: S. BEAUMONT	CHECKED BY: J. BYATT
ABUTMENT 1 REINFORCING	SHEET 34 OF 52

CONSULTING ENGINEERS

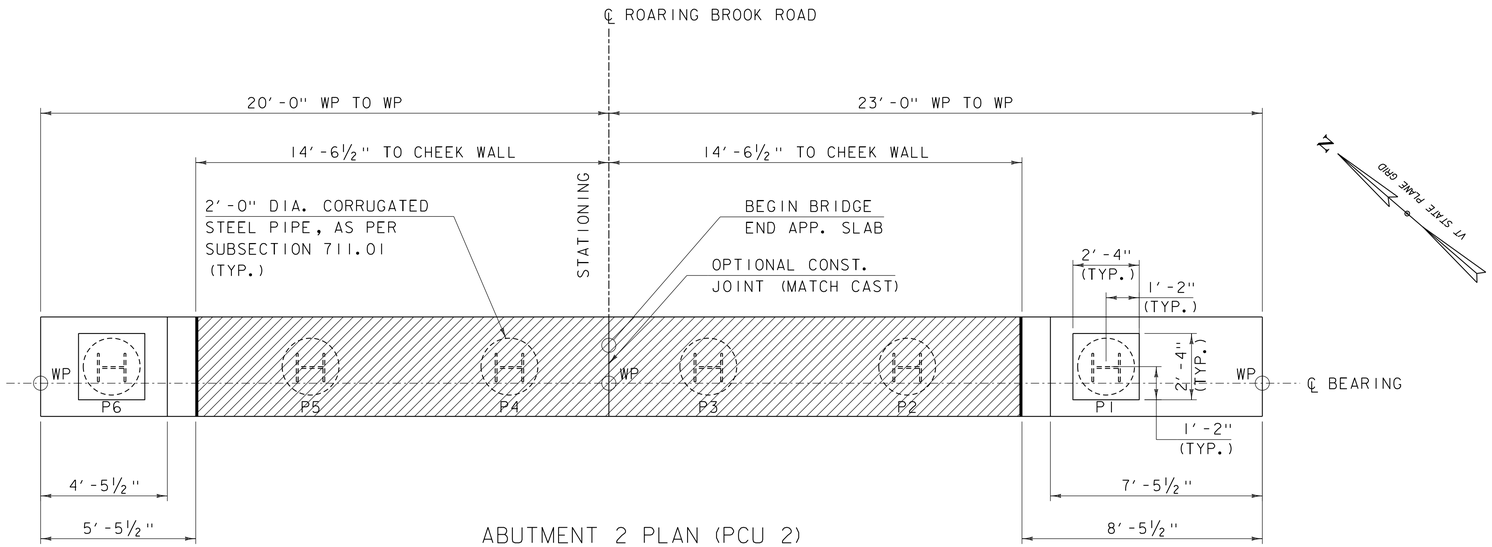

ABUTMENT 2 PLAN (PCU 2)

SCALE: ⅜" = 1'-0"

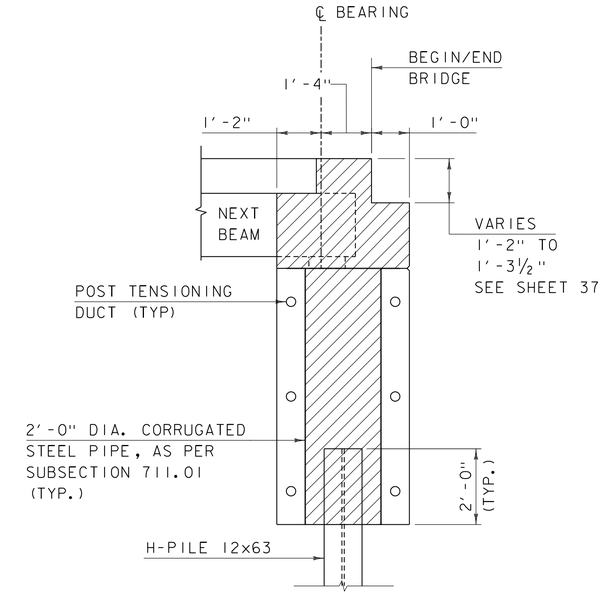

ABUTMENT TYPICAL

SCALE: ½" = 1'-0"

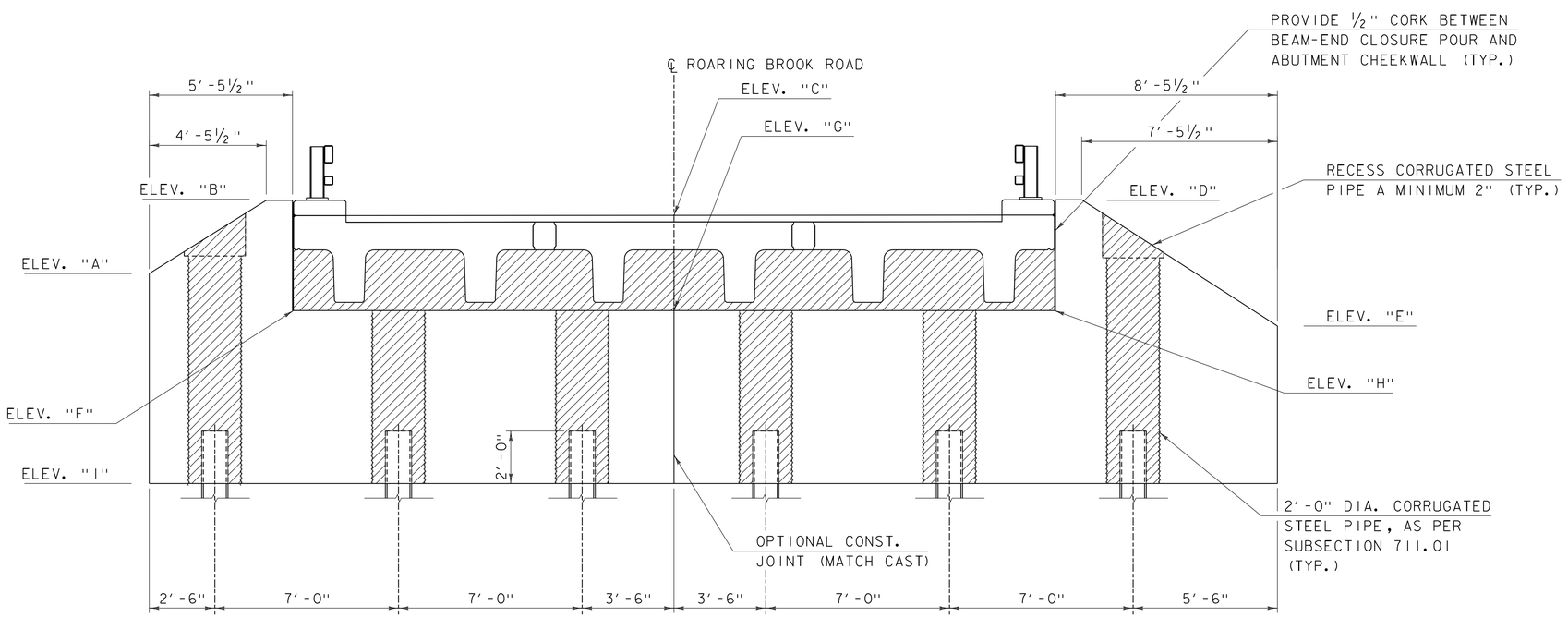

ABUTMENT 2 ELEVATION (PCU 2)

SCALE: ⅜" = 1'-0"

PCU ELEVATIONS

	AB2
ELEV "A"	1138.00
ELEV "B"	1140.79
ELEV "C"	1140.22
ELEV "D"	1140.81
ELEV "E"	1136.00
ELEV "F"	1136.59
ELEV "G"	1136.59
ELEV "H"	1136.59
ELEV "I"	1130.00

NOTE: ELEVATIONS ARE AT CENTERLINE BEARING

SPECIAL PROVISION (HIGH PERFORMANCE CONCRETE, RAPID SET) (TYP.)

CONSULTING ENGINEERS

PROJECT NAME: BARTON
PROJECT NUMBER: BRO 1449(31)

FILE NAME: z11j068abut2.dgn
PROJECT LEADER: J. BYATT
DESIGNED BY: S. BEAUMONT
ABUTMENT 2 PLAN

PLOT DATE: 7/15/2014
DRAWN BY: M. SMITH
CHECKED BY: J. BYATT
SHEET 35 OF 52

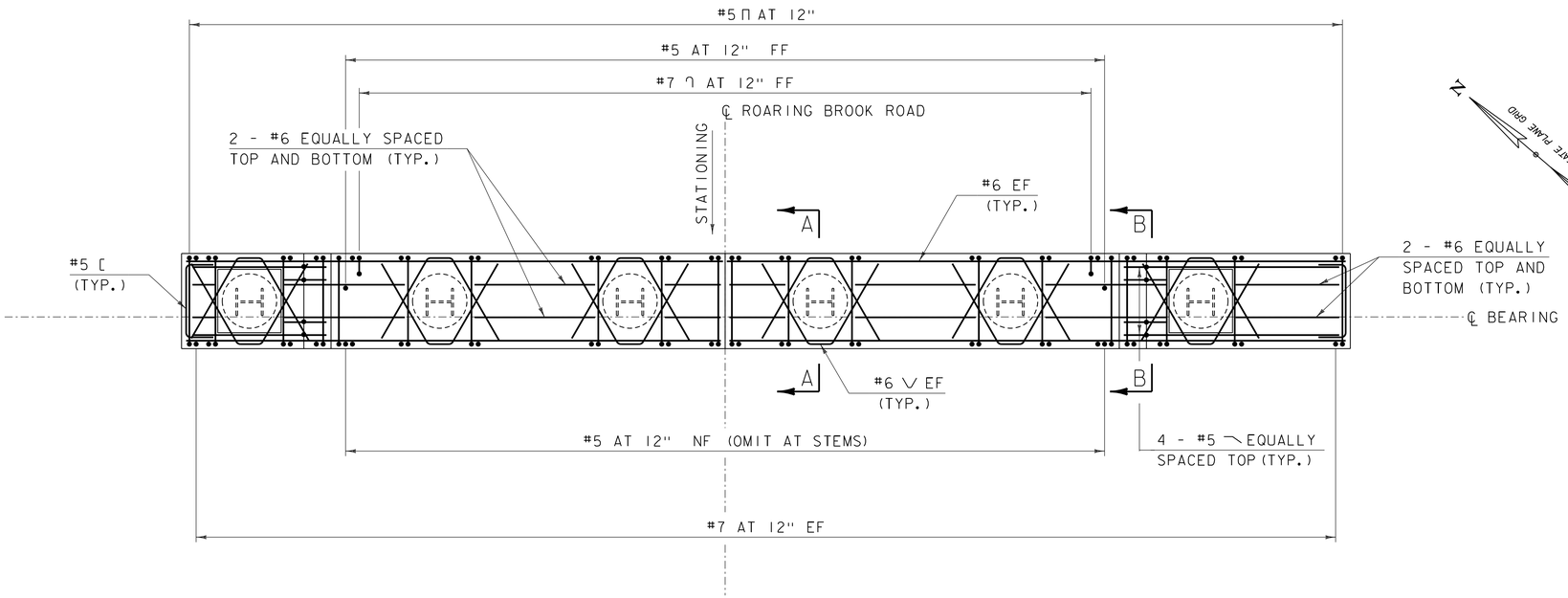

ABUTMENT 2 REINFORCING PLAN (PCU 2)

SCALE: 3/8" = 1'-0"

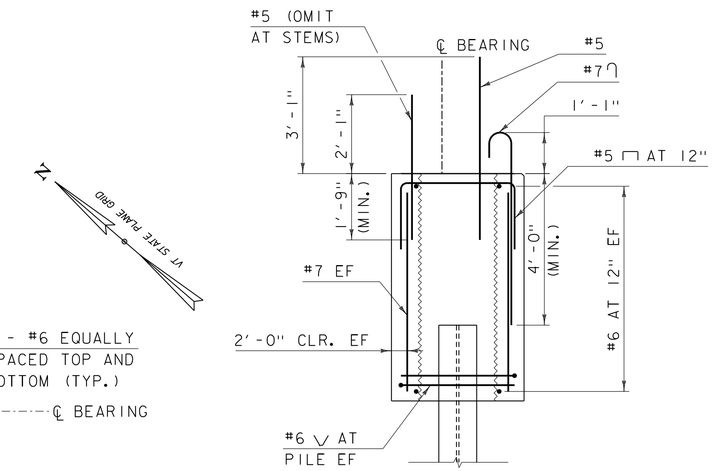

SECTION A-A

SCALE: 1/2" = 1'-0"

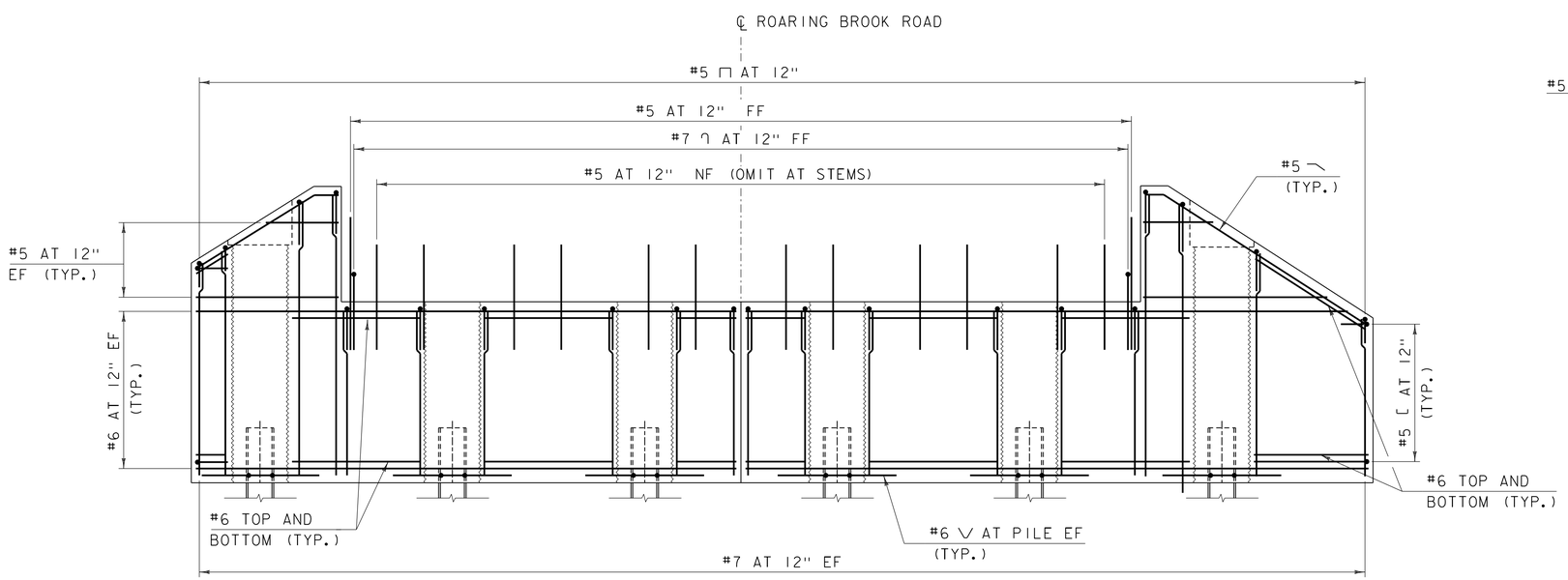

ABUTMENT 2 REINFORCING ELEVATION (PCU 2)

SCALE: 3/8" = 1'-0"

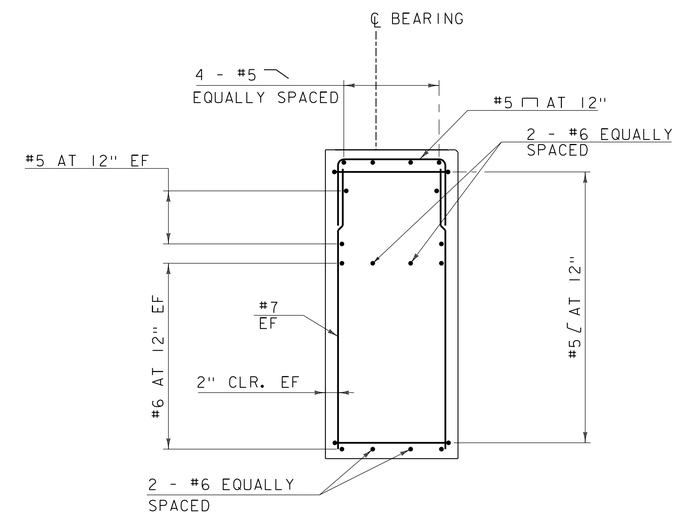

SECTION B-B

SCALE: 1/2" = 1'-0"

PROJECT NAME: BARTON	
PROJECT NUMBER: BRO 1449(31)	
FILE NAME: z11j068abut2.dgn	PLOT DATE: 7/15/2014
PROJECT LEADER: J. BYATT	DRAWN BY: M. SMITH
DESIGNED BY: S. BEAUMONT	CHECKED BY: J. BYATT
ABUTMENT 2 REINFORCING	SHEET 36 OF 52

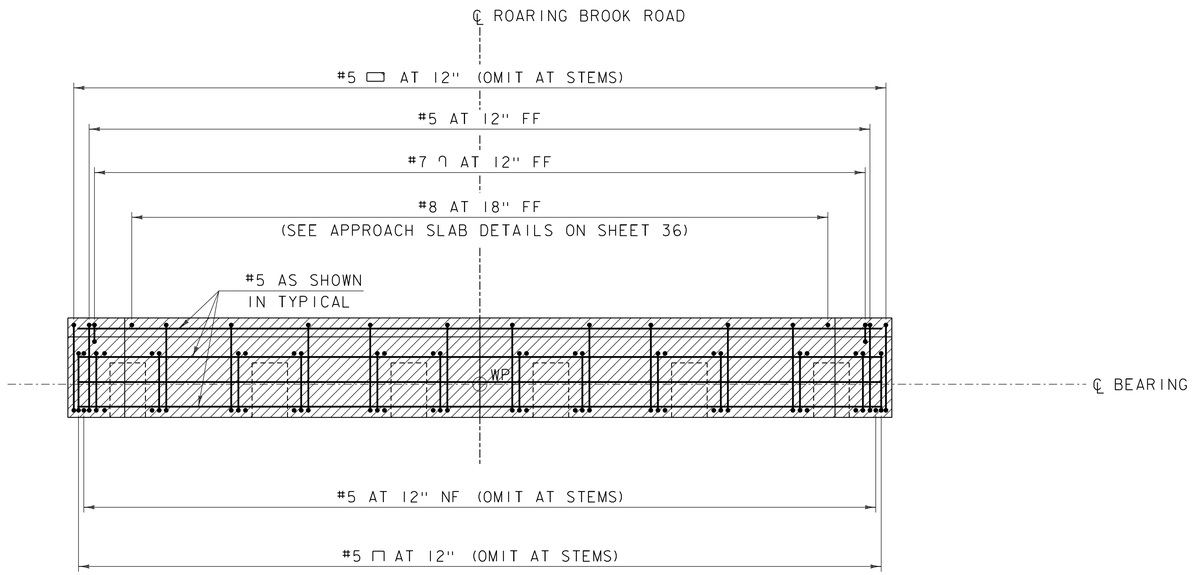

BEAM-END CLOSURE POUR
REINFORCING PLAN
SCALE: 3/8" = 1'-0"

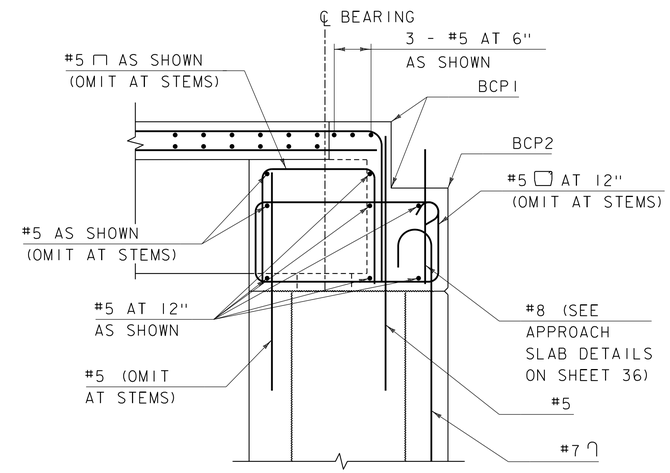

REINFORCING TYPICAL
SCALE: 3/4" = 1'-0"

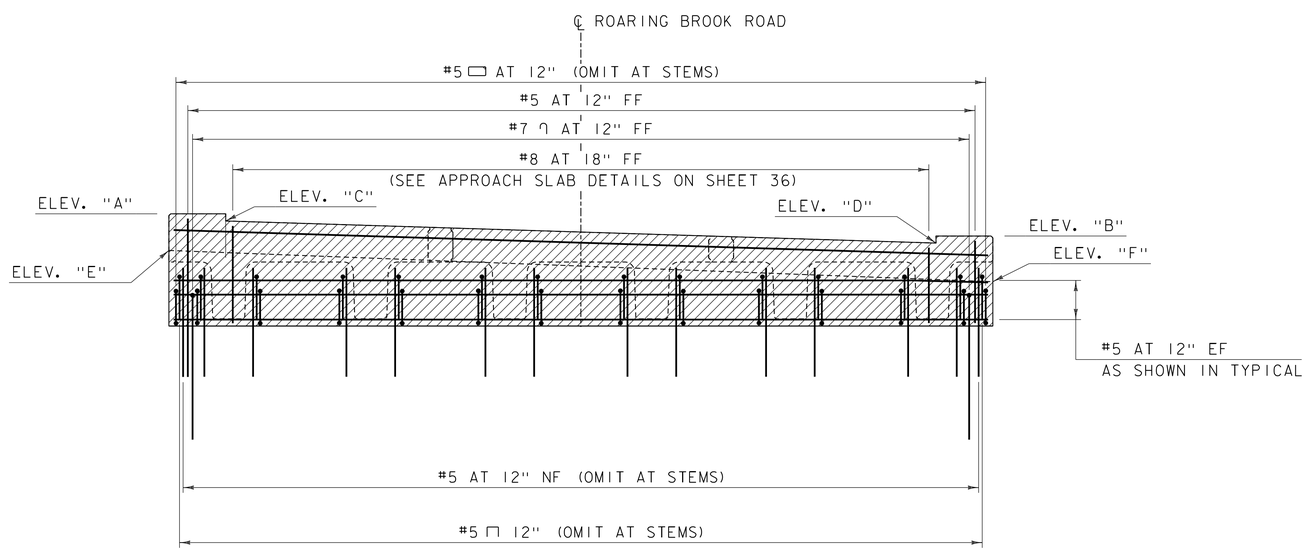

BEAM-END CLOSURE POUR
REINFORCING ELEVATION
SCALE: 3/8" = 1'-0"

NOTE: REINFORCEMENT STEEL FOR ABUTMENT 1 SHOWN, ABUTMENT 2 SIMILAR

BEAM-END CLOSURE POUR ELEVATIONS

	BEGIN/END BRIDGE BCP1		BACK OF ABUTMENT BCP2	
	ABUT. 1	ABUT. 2	ABUT. 1	ABUT. 2
ELEV "A"	1140.25	1140.23	–	–
ELEV "B"	1139.45	1140.23	–	–
ELEV "C"	1140.00	1139.98	–	–
ELEV "D"	1139.20	1139.98	–	–
ELEV "E"	1138.91	1138.83	1138.90	1138.83
ELEV "F"	1137.80	1138.64	1137.80	1138.65

NOTE: SEE REINFORCING TYPICAL FOR ELEVATION LOCATIONS.

NOTES:

NF = NEAR FACE
FF = FAR FACE
EF = EACH FACE
2" CLEAR, UNLESS OTHERWISE SPECIFIED ON THE THE PLANS.
2'-6" BAR LAP UNLESS OTHERWISE SPECIFIED ON THE PLANS

SPECIAL PROVISION (HIGH PERFORMANCE CONCRETE, RAPID SET) (TYP.)

CONSULTING ENGINEERS

PROJECT NAME: BARTON
PROJECT NUMBER: BRO 1449(31)

FILE NAME: z11j068abut1.dgn
PROJECT LEADER: J. BYATT
DESIGNED BY: S. BEAUMONT
BEAM-END CLOSURE POUR REINFORCING

PLOT DATE: 7/15/2014
DRAWN BY: M. SMITH
CHECKED BY: J. BYATT
SHEET 37 OF 52

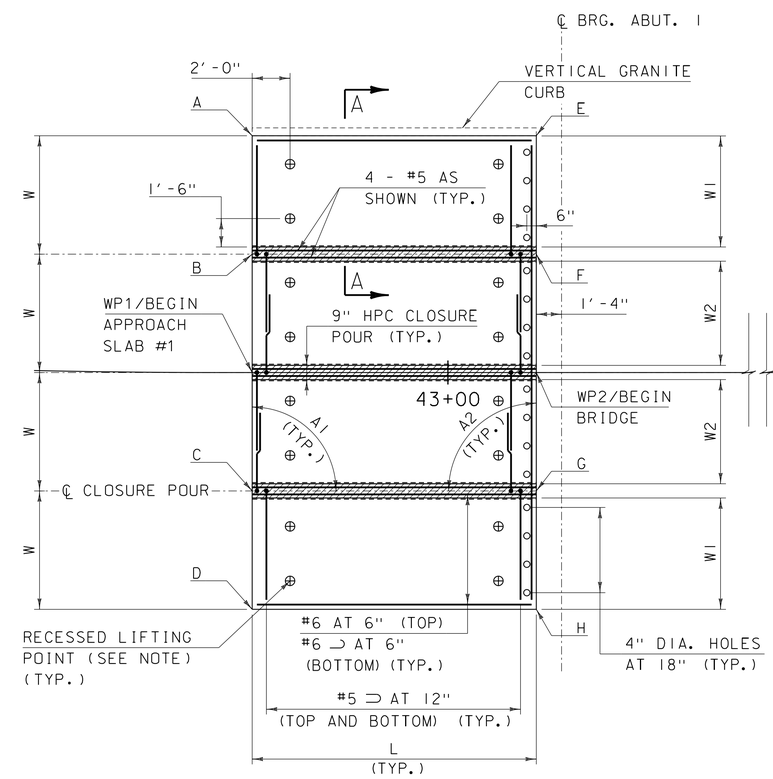

APPROACH SLAB 1 PLAN VIEW

SCALE: 1/4" = 1'-0"

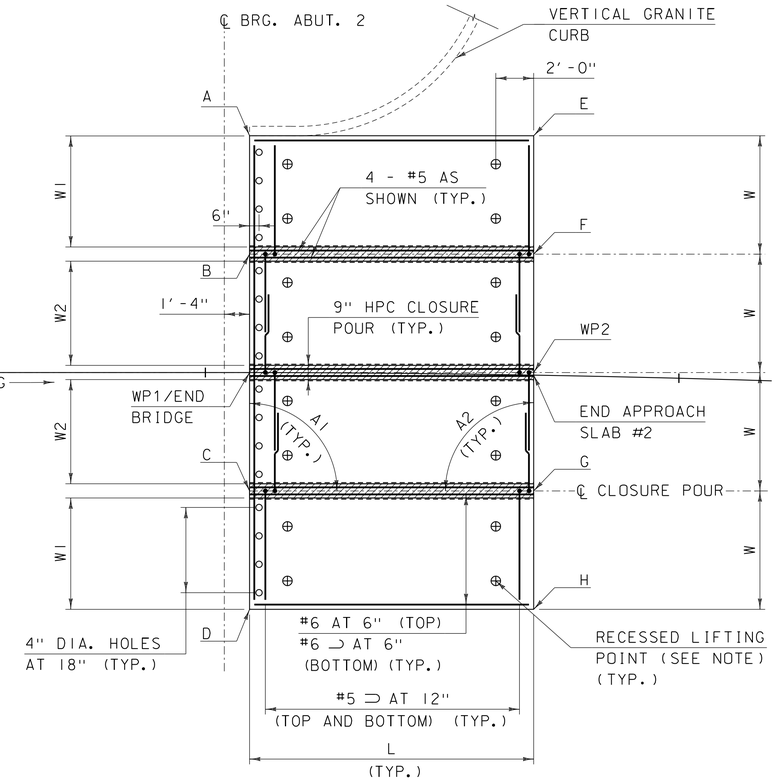

APPROACH SLAB 2 PLAN VIEW

SCALE: 1/4" = 1'-0"

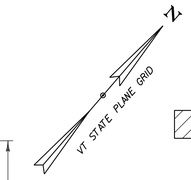

SPECIAL PROVISION (HIGH PERFORMANCE CONCRETE, RAPID SET) (TYP.)

APPROACH SLAB DIMENSIONS

APPROACH SLAB #1	A1	90°
	A2	90°
APPROACH SLAB #2	A1	90°
	A2	90°

T	VARIES (1'-2" TO 1'-3 7/8")
L	15'-0"
W	6'-3"
W1	5'-10 1/2"
W2	5'-6"

APPROACH SLAB ELEVATIONS

	STATION	OFFSET	TOP OF SLAB ELEVATION	BOTTOM OF SLAB ELEVATION
1A	42+89.67	-12.50	1138.96	1137.79
1B	42+89.67	-6.25	1139.22	1138.02
BEGIN/ WP1 AS #1	42+89.67	0.00	1139.49	1138.24
1C	42+89.67	6.25	1139.75	1138.47
1D	42+89.67	12.50	1140.01	1138.69
1E	43+04.67	-12.50	1139.20	1137.88
1F	43+04.67	-6.25	1139.40	1138.12
WP2 AS#1/ BEGIN BRIDGE	43+04.67	0.00	1139.60	1138.35
1G	43+04.67	6.25	1139.80	1138.59
1H	43+04.67	12.50	1140.00	1138.83
2A	43+52.32	-12.50	1139.98	1138.81
2B	43+52.33	-6.25	1139.98	1138.77
END BRIDGE/ WP1 AS#2	43+52.33	0.00	1139.98	1138.74
2C	43+52.34	6.25	1139.98	1138.70
2D	43+52.35	12.50	1139.98	1138.66
2E	43+67.12	-12.63	1140.23	1138.91
2F	43+67.22	-6.39	1140.16	1138.88
WP2	43+67.33	-0.14	1140.10	1138.86
END AS #2	43+67.33	0.00	1140.10	1138.86
2G	43+67.44	6.11	1140.04	1138.83
2H	43+67.55	12.36	1139.97	1138.80

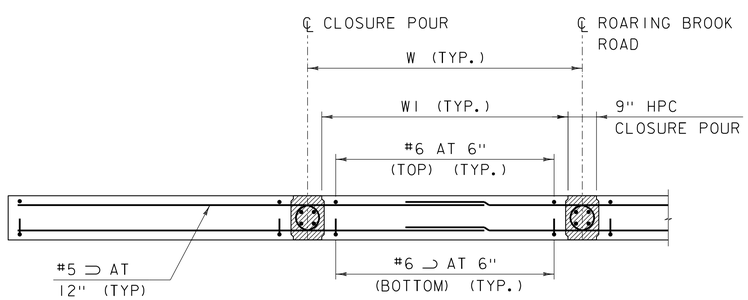

SECTION A-A

SCALE: 1/2" = 1'-0"

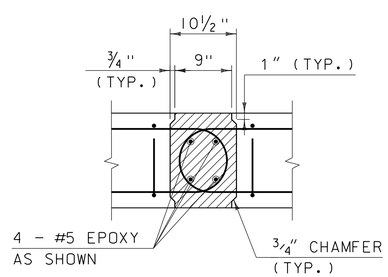

JOINT DETAIL SECTION

SCALE: 1" = 1'-0"

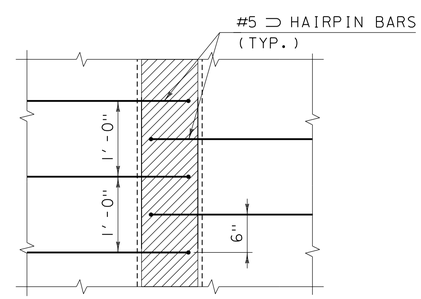

JOINT DETAIL PLAN

SCALE: 1" = 1'-0"

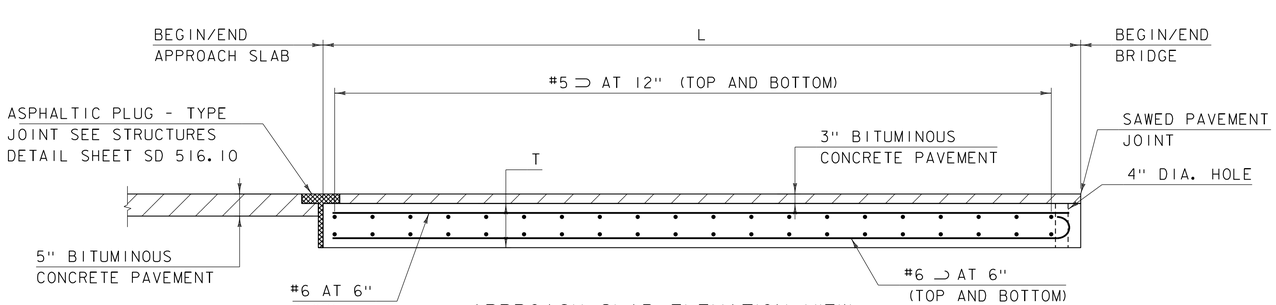

APPROACH SLAB ELEVATION VIEW

SCALE: 1/2" = 1'-0"

NOTES:

1. FABRICATOR TO DESIGN LIFTING POINTS AND INCLUDE CALCULATIONS WITH SUBMITTAL.
2. 2" CLEAR UNLESS OTHERWISE SPECIFIED ON THE PLANS.
3. 2'-6" BAR LAP UNLESS OTHERWISE SPECIFIED ON THE PLANS.
4. THE CROSS SLOPE TRANSITIONS ALONG THE FULL LENGTH OF THE APPROACH SLABS AND BRIDGE. SEE APPROACH SLAB TOP AND BOTTOM ELEVATIONS THIS SHEET.

CONSULTING ENGINEERS

PROJECT NAME: BARTON
PROJECT NUMBER: BRF 0269(13)

FILE NAME: z11j068slab.dgn
PROJECT LEADER: J. BYATT
DESIGNED BY: S. BEAUMONT
APPROACH SLAB DETAILS

PLOT DATE: 7/15/2014
DRAWN BY: M. SMITH
CHECKED BY: J. BYATT
SHEET 38 OF 52

CLD 12-0175 MODEL: Slab01

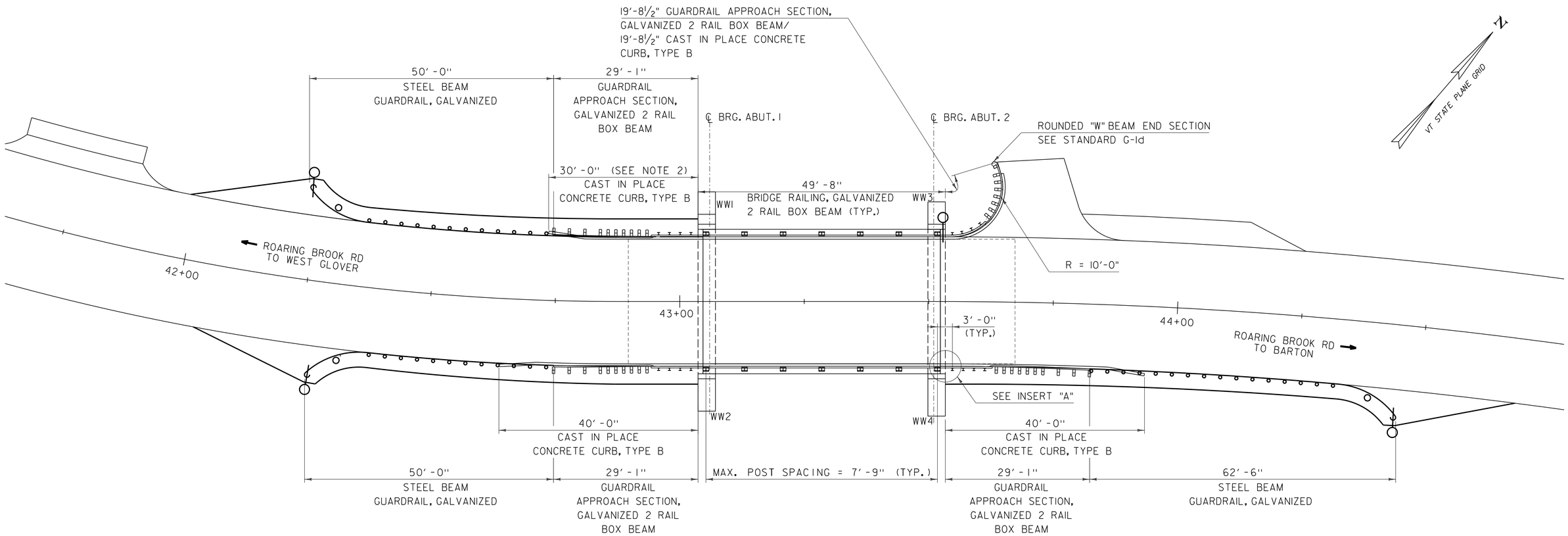

RAIL AND CURB LAYOUT PLAN

SCALE: 1" = 10'-0"

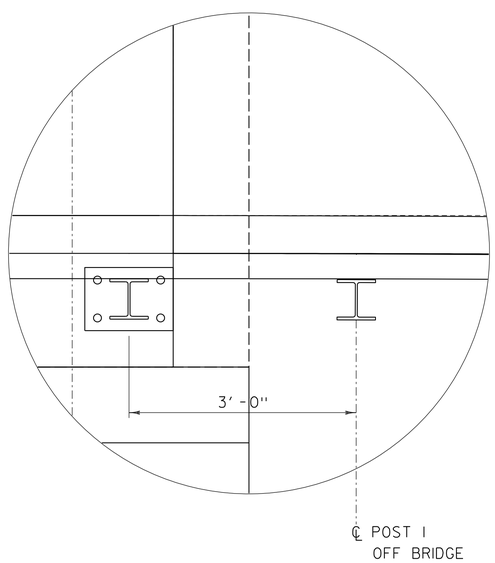

INSERT "A"

(SOUTHEAST CORNER SHOWN, OTHER CORNERS SIMILAR)
SCALE: 1" = 10'-0"

NOTES:

1. SEE STANDARDS G-1, G-1d, S-360A AND S-360B.
2. NORTHWEST CURB LENGTH HAS BEEN MODIFIED FROM STANDARD TO ACCOMMODATE DRAINAGE AT THE LOW POINT OF THE ROAD. PROVIDE REVEAL TAPER AND FLARE DETAILED IN STANDARD AT REVISED LOCATION.

0 10 20
(SCALE 1" = 10')

PROJECT NAME: BARTON	
PROJECT NUMBER: BRO 1449(31)	
FILE NAME: 11j068/cos/z11j068rail.dgn	PLOT DATE: 7/15/2014
PROJECT LEADER: J. BYATT	DRAWN BY: M. SMITH
DESIGNED BY: S. BEAUMONT	CHECKED BY: J. BYATT
RAIL AND CURB LAYOUT SHEET	SHEET 39 OF 52

CONSULTING ENGINEERS

CLD 12-0174 MODEL: RAIL01

STATE OF VERMONT
AGENCY OF TRANSPORTATION

REINFORCING STEEL SCHEDULE

ITEM	EACH	SIZE	LENGTH	MARK	TYPE	A	B	C	D	E	F	G	H	J	K	R	O
	CURB																
✳	13	5	25'- 9"	D501.2	STR	25'- 9"											

ITEM	EACH	SIZE	LENGTH	MARK	TYPE	A	B	C	D	E	F	G	H	J	K	R	O

~ NOTES ~

1. UNLESS OTHERWISE DESIGNATED, ALL BAR REINFORCEMENT FOR CONCRETE IN SIZES UP TO AND INCLUDING NO. 18 SHALL CONFORM TO THE REQUIREMENTS OF THE "SPECIFICATIONS FOR DEFORMED BILLET-STEEL BARS FOR CONCRETE REINFORCEMENT", AASHTO M 31 (ASTM A 615-SI). ALL BARS SHALL BE GRADE 60, UNLESS OTHERWISE DESIGNATED.
2. FOR TYPICAL BENDING DETAILS, RECOMMENDED PIN DIAMETER "D" OF BENDS AND HOOKS, AND OTHER STANDARD PRACTICE, SEE CURRENT CONCRETE REINFORCING STEEL INSTITUTE "MANUAL OF STANDARD PRACTICE".
3. BARS WHICH REQUIRE MORE ACCURATE BENDING THAN STANDARD PRACTICES SHOULD HAVE LIMITS INDICATED.
4. ALL DIMENSIONS ARE OUT TO OUT OF BAR EXCEPT "A" AND "G" ON STANDARD 180 DEGREE AND 135 DEGREE HOOKS.
5. "J" DIMENSION ON 180 DEGREE HOOKS TO BE SHOWN ONLY WHERE NECESSARY TO RESTRICT HOOK SIZE. OTHERWISE, STANDARD HOOKS ARE TO BE USED.
6. "H" DIMENSION ON STIRRUPS TO BE SHOWN ONLY WHEN NECESSARY TO MAINTAIN CLEARANCES.
7. WHERE SLOPE DIFFERS FROM 45 DEGREES, DIMENSIONS "H" AND "K" MUST BE SHOWN.
8. ▲ DENOTES BARS TO BE CUT IN FIELD.
9. ✳ DENOTES ONE EXTRA BAR ADDED FOR TESTING PURPOSES.
10. △ DENOTES TWO EXTRA BARS ADDED FOR TESTING PURPOSES.
11. E IN BAR MARK PREFIX DENOTES EPOXY COATED REINFORCING STEEL.

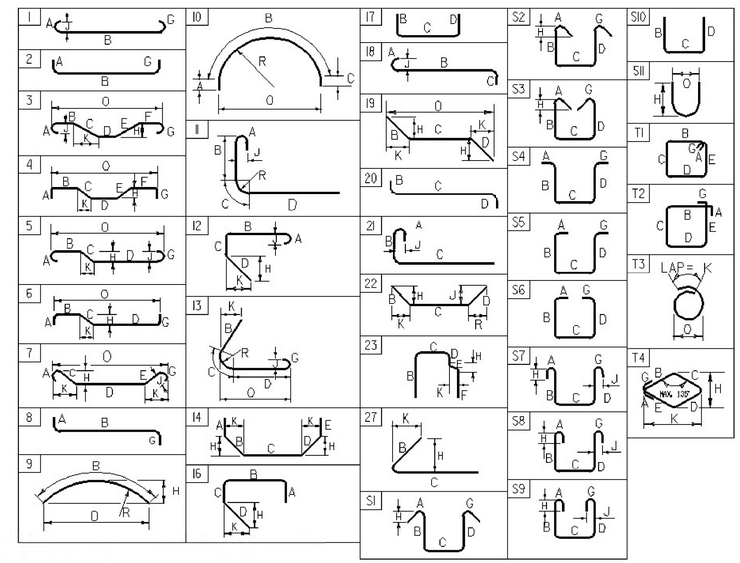

ASTM STANDARD REINFORCING BARS

BAR SIZE DESIGNATION	WEIGHT POUNDS PER FOOT	NOMINAL DIMENSIONS ROUND SECTION		
		DIAMETER INCHES	AREA INCHES ^{2}	PERIMETER INCHES
#3	0.376	0.375	0.11	1.178
#4	0.668	0.500	0.20	1.571
#5	1.043	0.625	0.31	1.963
#6	1.502	0.750	0.44	2.356
#7	2.044	0.875	0.60	2.749
#8	2.670	1.000	0.79	3.142
#9	3.400	1.128	1.00	3.544
#10	4.303	1.270	1.27	3.990
#11	5.313	1.410	1.56	4.430
#14	7.65	1.693	2.25	5.32
#18	13.60	2.257	4.00	7.09

PROJECT NAME: BARTON
PROJECT NUMBER: BRO 1449(31)

FILE NAME: 10c412/cos/$FILEABBREV$
PROJECT LEADER: J. BYATT
DESIGNED BY: S. BEAUMONT
REINFORCING STEEL SCHEDULE SHEET #1

PLOT DATE: 7/15/2014
DRAWN BY: M. SMITH
CHECKED BY: J. BYATT
SHEET 40 OF 52

CLOCK: 12-10-2021 MODULE: Excel Schedule

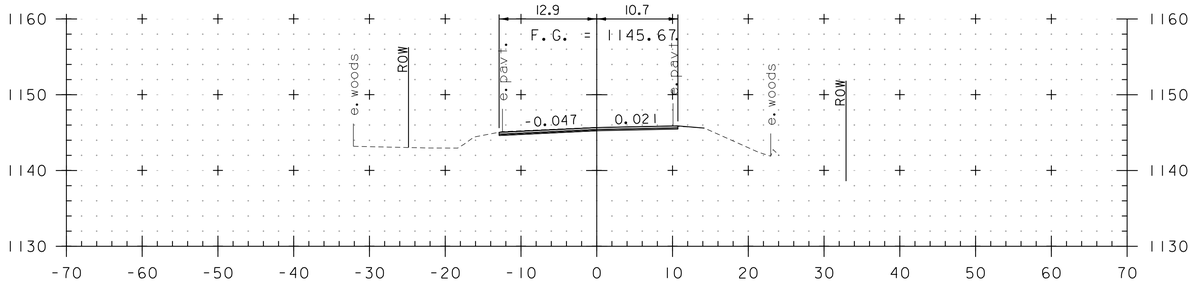

40+00

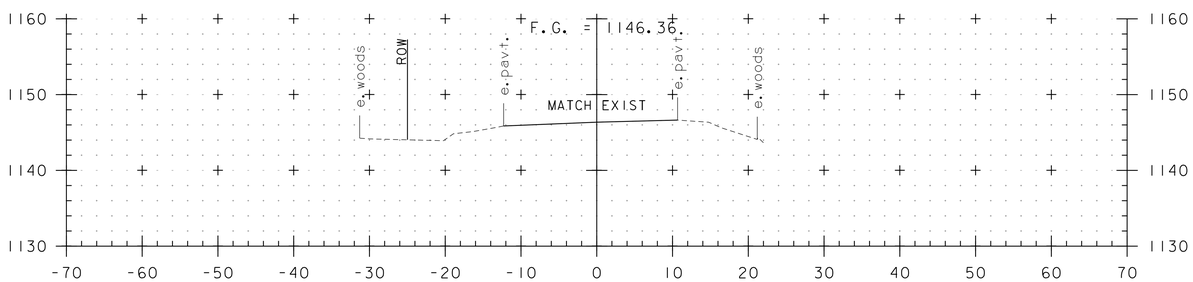

39+75
BEGIN APPROACH

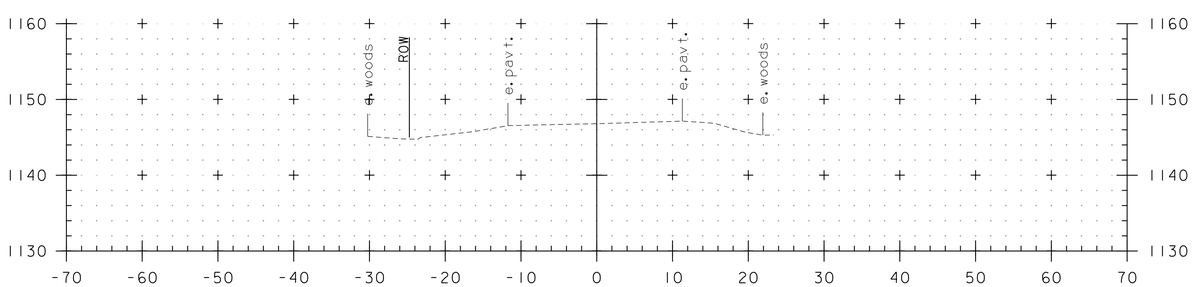

39+50

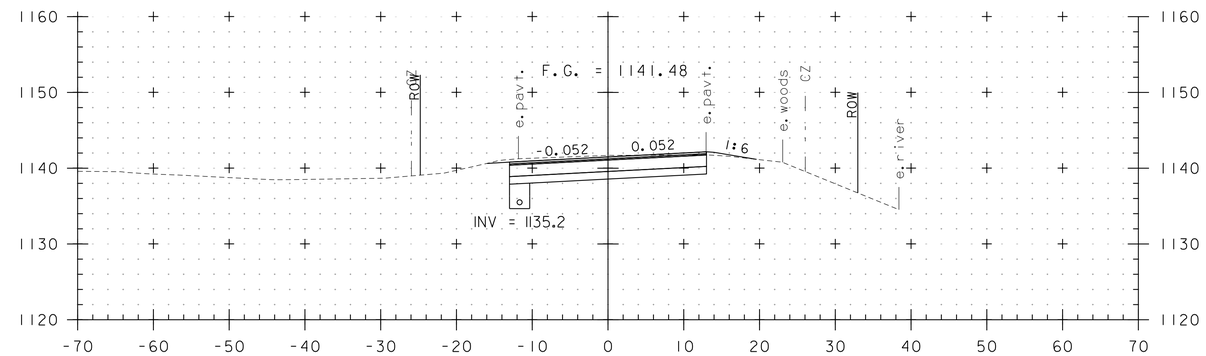

41+50

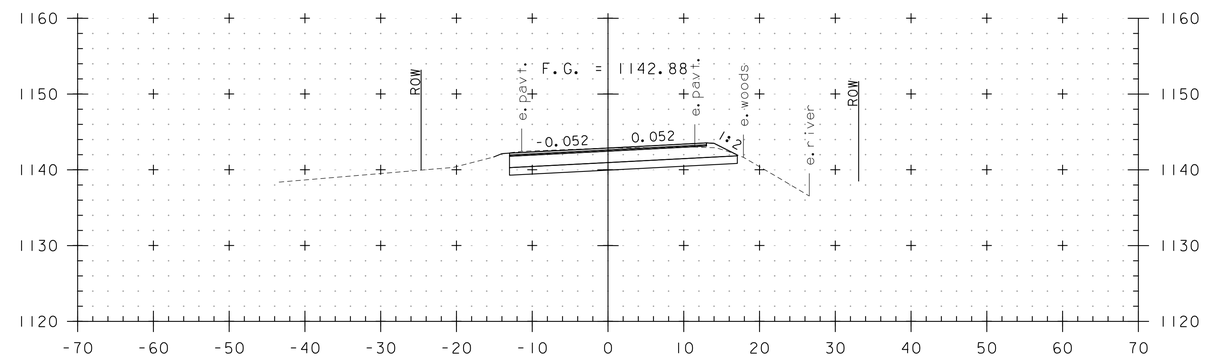

41+00

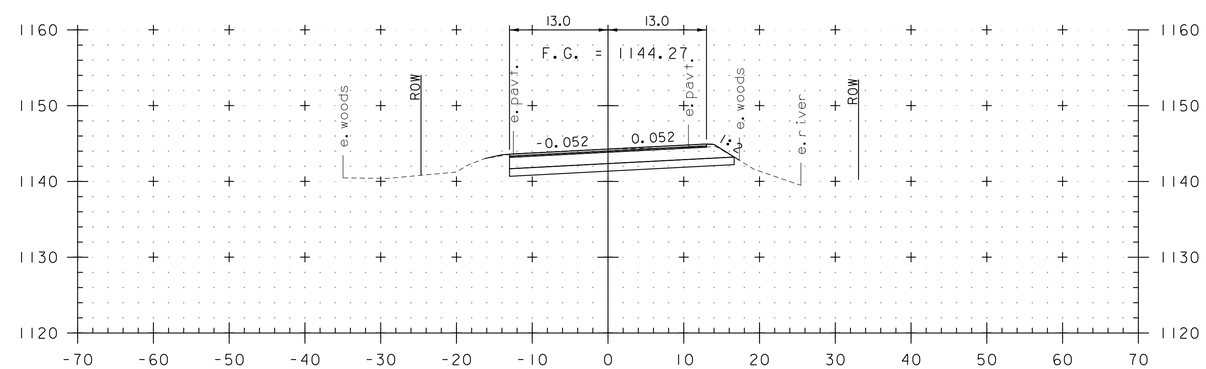

40+50
BEGIN PROJECT

STA. 39+50 TO STA. 41+50

0 10 20
(SCALE 1" = 10')

CONSULTING ENGINEERS

PROJECT NAME: BARTON	
PROJECT NUMBER: BRO 1449(31)	
FILE NAME: 11j068/cos/z11j068xs.dgn	PLOT DATE: 7/15/2014
PROJECT LEADER: J. BYATT	DRAWN BY: M. HALEY
DESIGNED BY: M. HALEY	CHECKED BY: P. SHEDD
ROADWAY CROSS SECTIONS 1	SHEET 41 OF 52

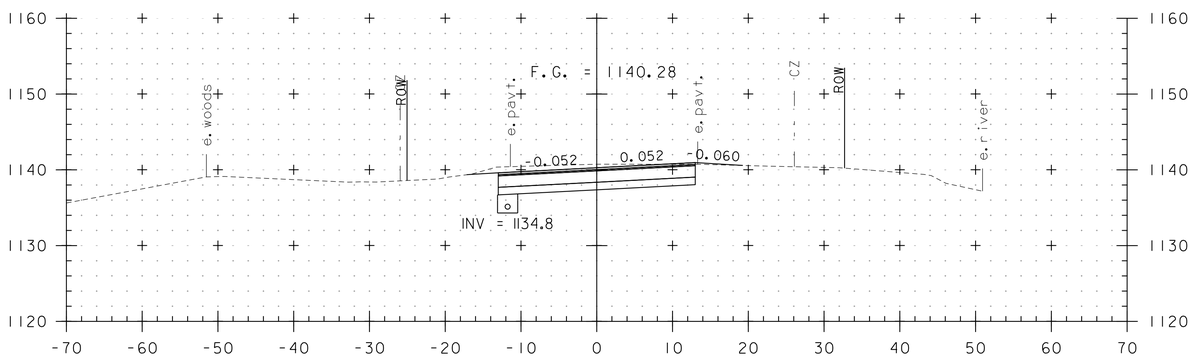

42+00

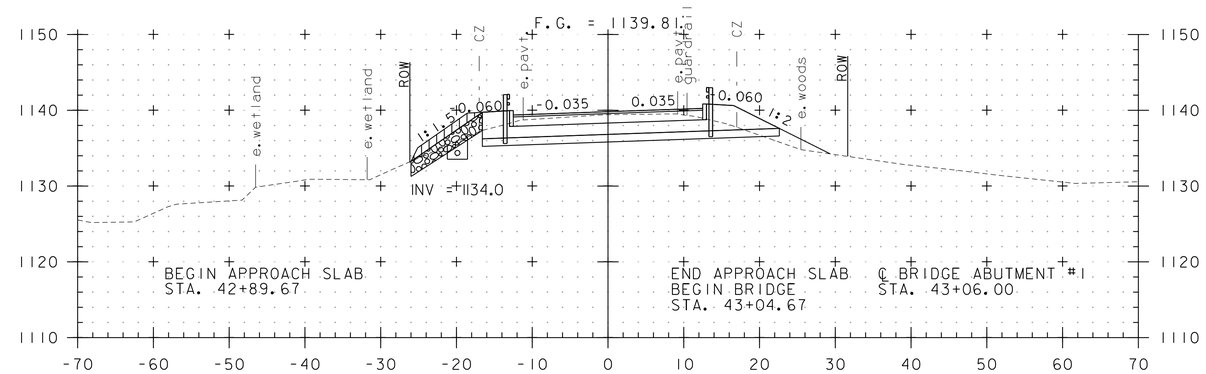

43+00

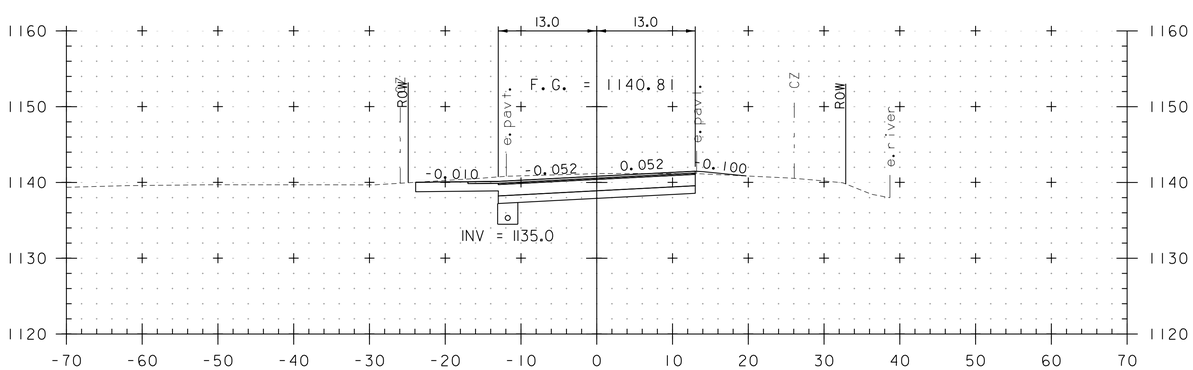

41+75
DRIVE LT

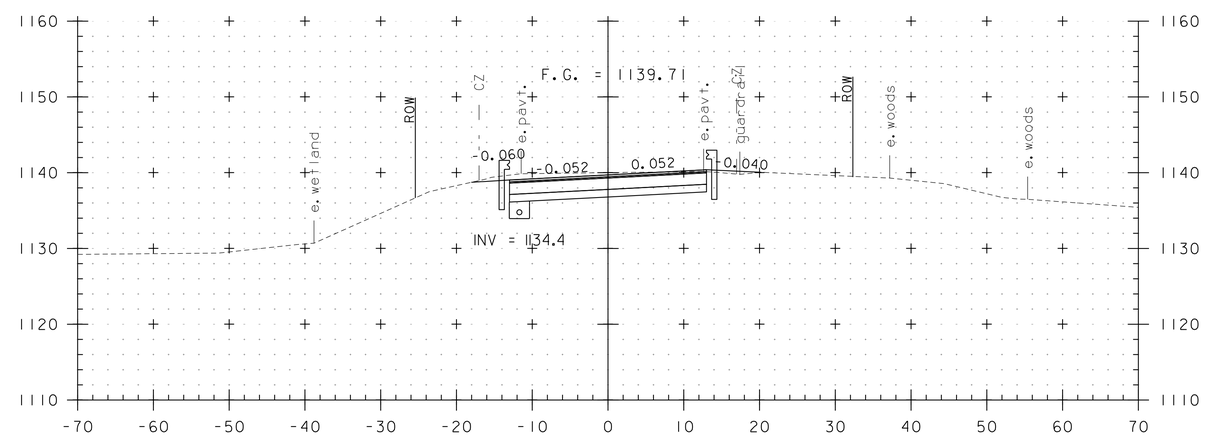

42+50

STA. 41+75 TO STA. 43+00

0 10 20
(SCALE 1" = 10')

CONSULTING ENGINEERS

PROJECT NAME: BARTON	
PROJECT NUMBER: BRO 1449(31)	
FILE NAME: 11j068/cos/z11j068xs.dgn	PLOT DATE: 7/15/2014
PROJECT LEADER: J. BYATT	DRAWN BY: M. HALEY
DESIGNED BY: M. HALEY	CHECKED BY: P. SHEDD
ROADWAY CROSS SECTIONS 2	SHEET 42 OF 52

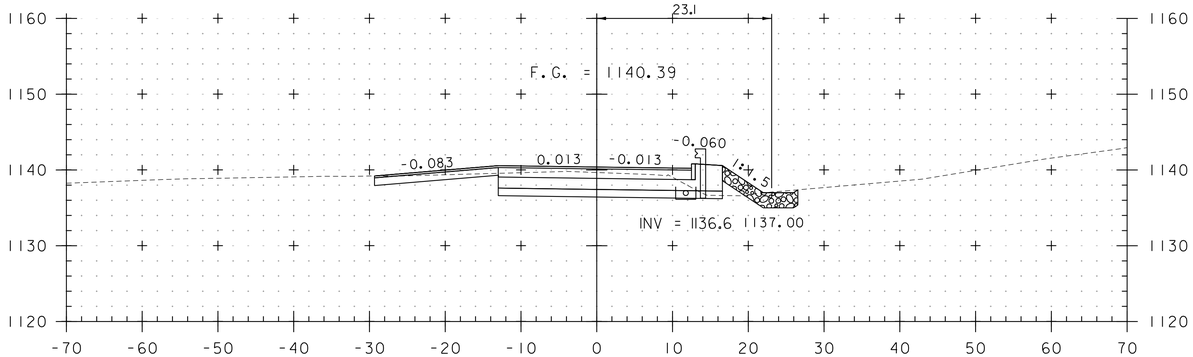

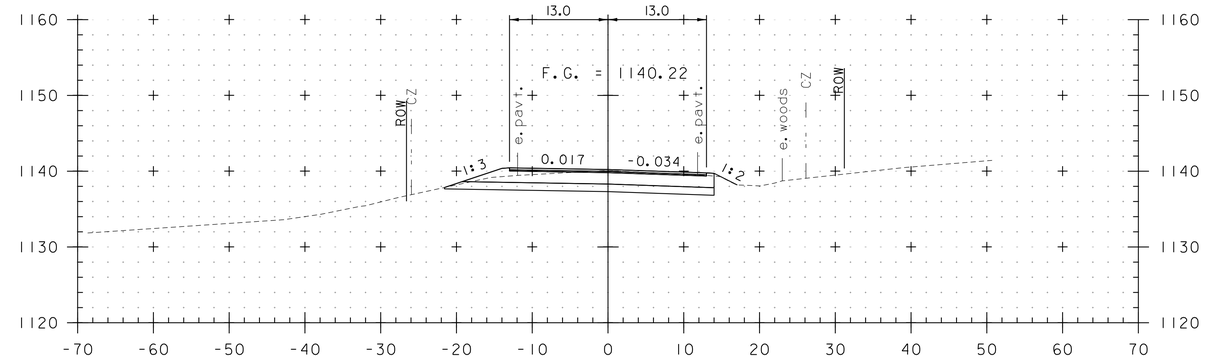

45+00

43+72
DRIVE LT

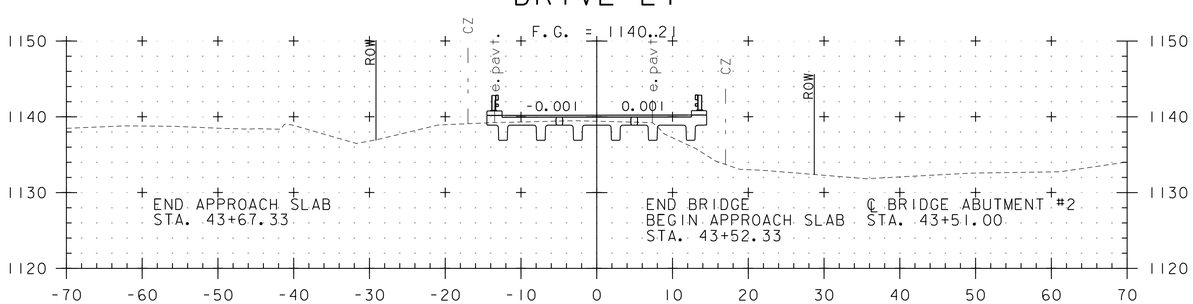

43+50

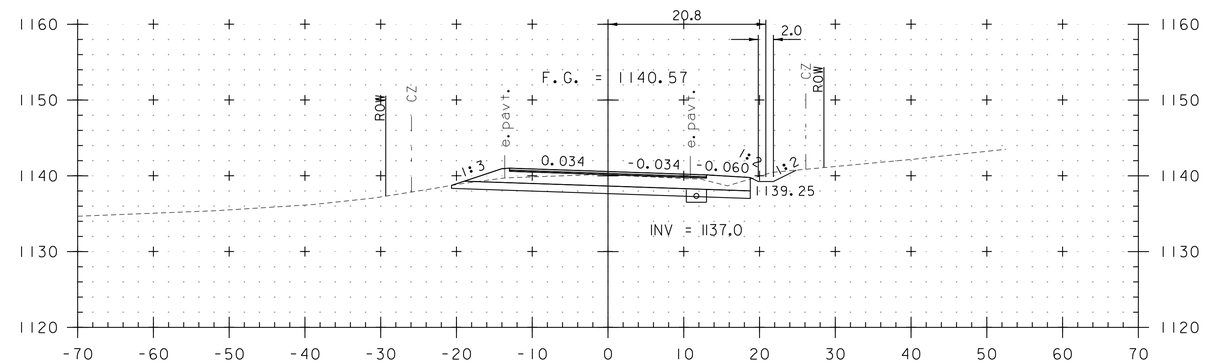

44+50

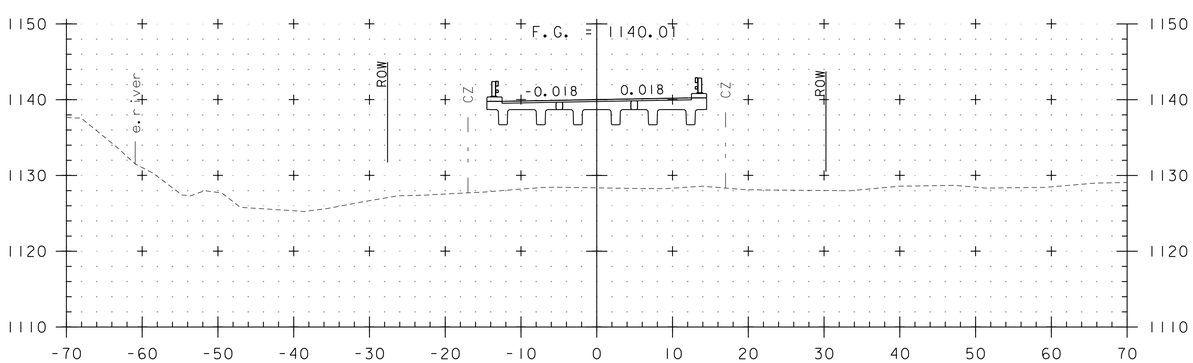

43+25

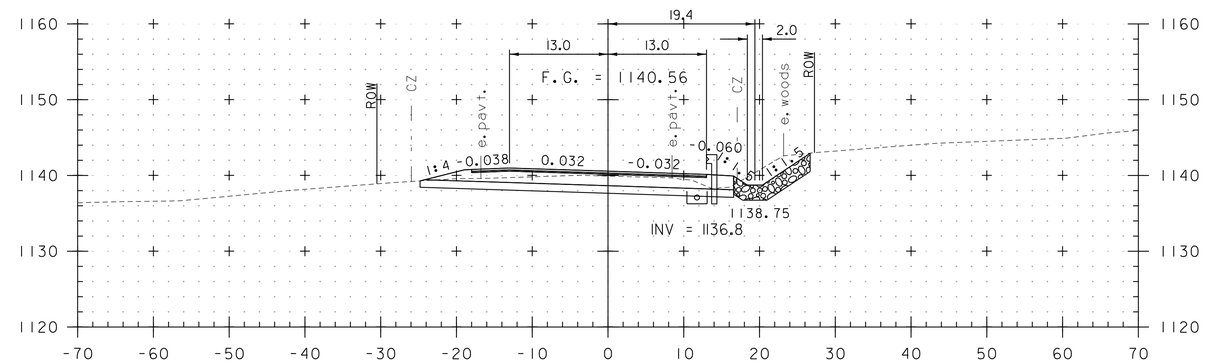

44+00

STA. 43+25 TO STA. 45+00

0 10 20
(SCALE 1" = 10')

CONSULTING ENGINEERS

PROJECT NAME: BARTON	
PROJECT NUMBER: BRO 1449(31)	
FILE NAME: 11j068/cos/z11j068xs.dgn	PLOT DATE: 7/15/2014
PROJECT LEADER: J. BYATT	DRAWN BY: M. HALEY
DESIGNED BY: M. HALEY	CHECKED BY: P. SHEDD
ROADWAY CROSS SECTIONS 3	SHEET 43 OF 52

CLD 12-017A4 MODEL: XS03

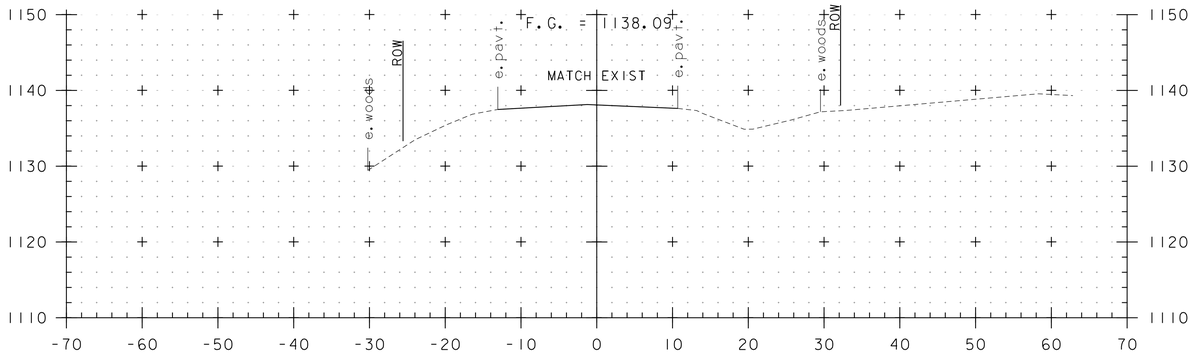

46+25
END APPROACH

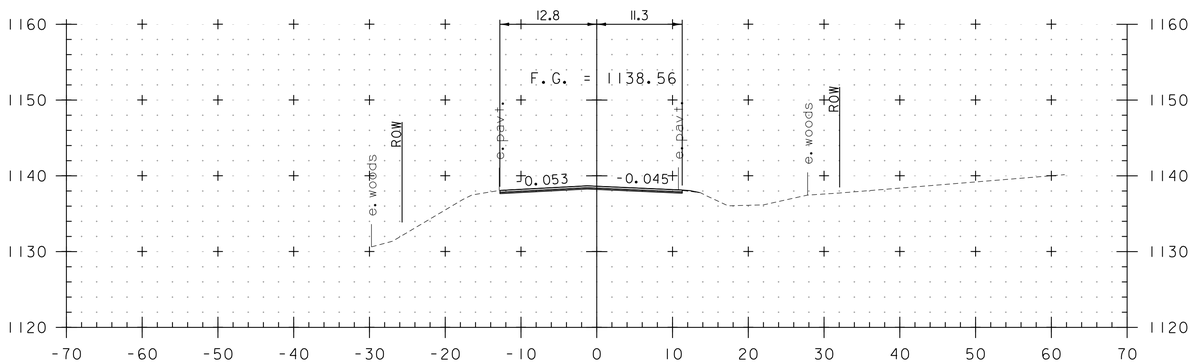

46+00

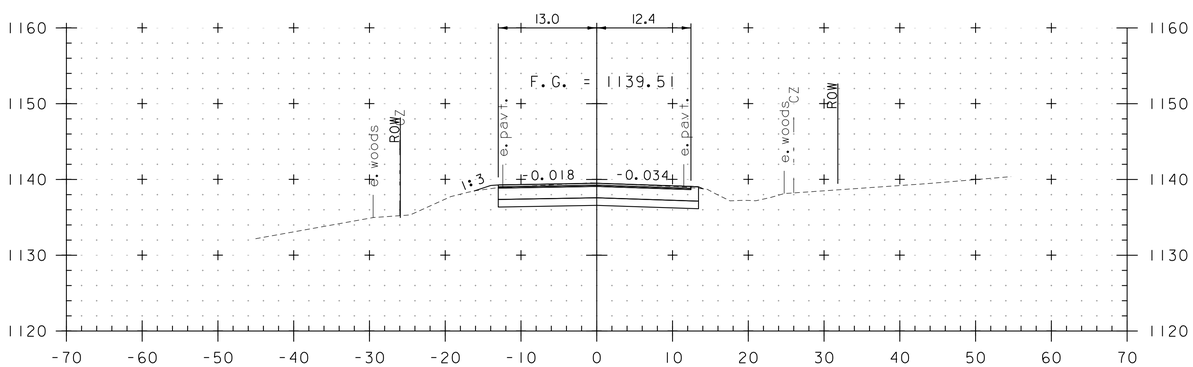

45+50
END PROJECT

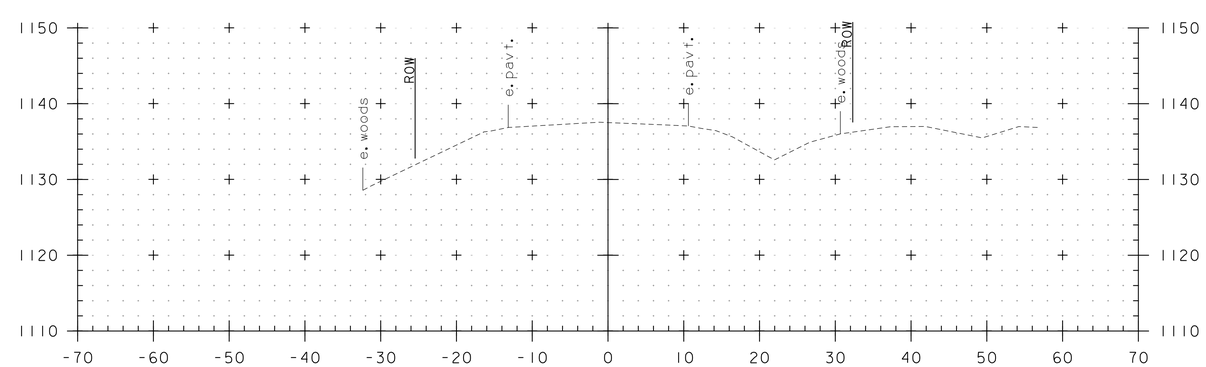

46+50

STA. 45+50 TO STA. 46+50

0 10 20
(SCALE 1" = 10')

CONSULTING ENGINEERS

PROJECT NAME: BARTON	
PROJECT NUMBER: BRO 1449(31)	
FILE NAME: 11j068/cos/z11j068xs.dgn	PLOT DATE: 7/15/2014
PROJECT LEADER: J. BYATT	DRAWN BY: M. HALEY
DESIGNED BY: M. HALEY	CHECKED BY: P. SHEDD
ROADWAY CROSS SECTIONS 4	SHEET 44 OF 52

MODEL: XS04

CLD 12-017A

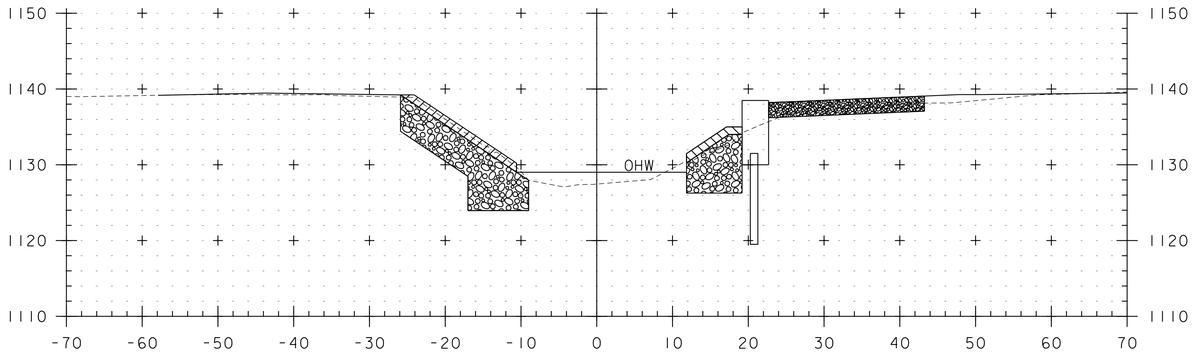

STA. 0+14 LT
BEGIN UNCLASSIFIED CHANNEL EXCAVATION
STONE FILL, TYPE IV
GEOTEXTILE UNDER STONE FILL, TYPE IV
GRUBBING MATERIAL

0+20

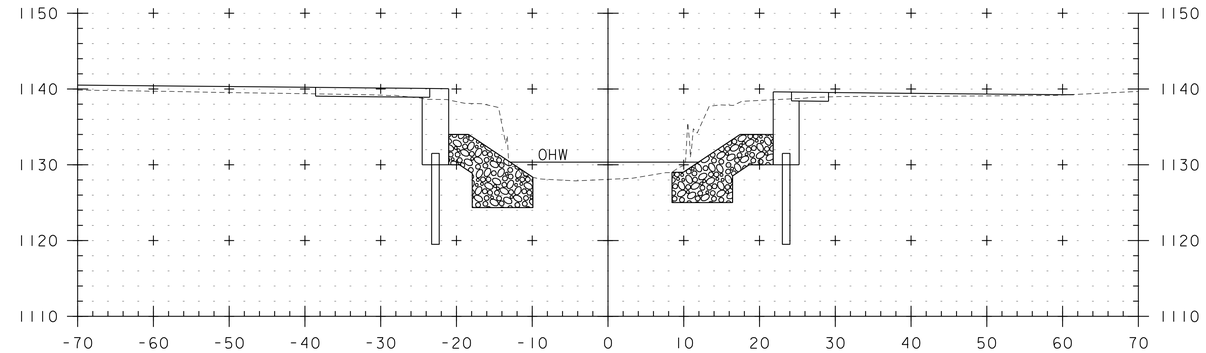

STA. 0+12 RT
BEGIN UNCLASSIFIED CHANNEL EXCAVATION
STONE FILL, TYPE IV
GEOTEXTILE UNDER STONE FILL, TYPE IV
GRUBBING MATERIAL

0+50

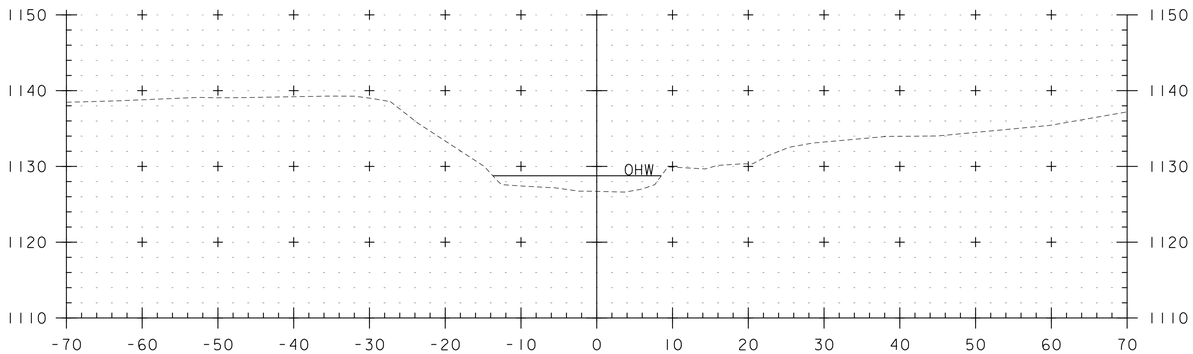

0+10

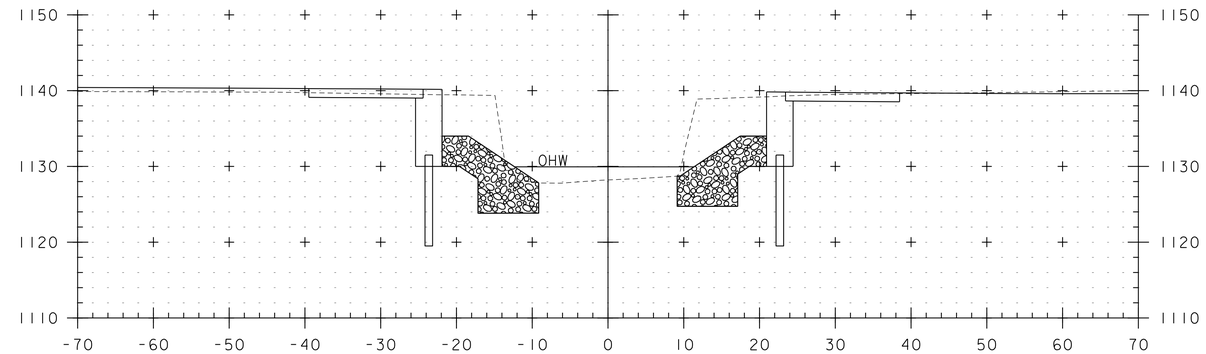

0+40

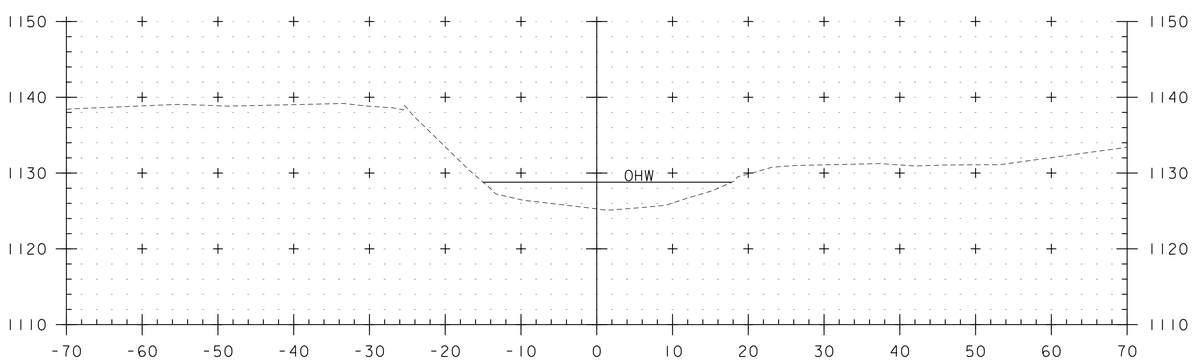

0+00

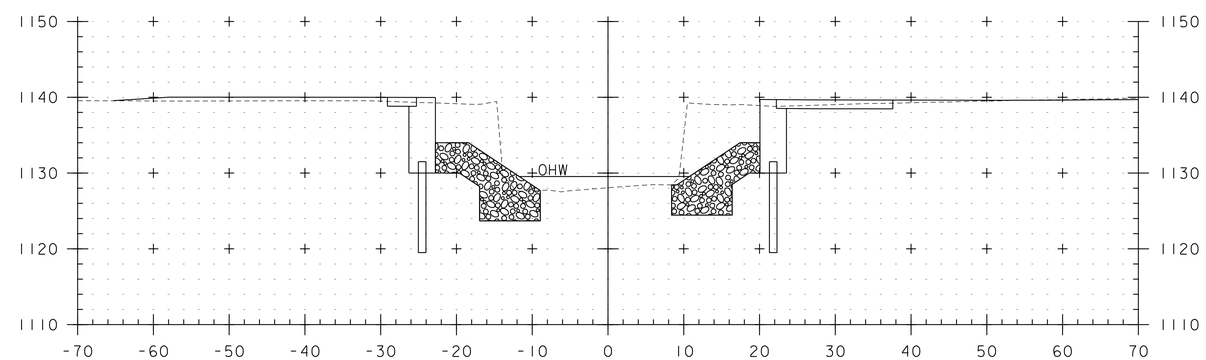

STA. 0+28 LT
END GRUBBING MATERIAL

0+30

STA. 0+25 RT
END GRUBBING MATERIAL

STA. 0+00 TO STA. 0+50

CONSULTING ENGINEERS

PROJECT NAME: BARTON	
PROJECT NUMBER: BRO 1449(31)	
FILE NAME: z11j068xschan.dgn	PLOT DATE: 7/15/2014
PROJECT LEADER: J. BYATT	DRAWN BY: M. SMITH
DESIGNED BY: S. BEAUMONT	CHECKED BY: J. BYATT
CHANNEL CROSS SECTIONS 1	SHEET 45 OF 52

MODEL: XSCHAN01

CLD 12-0174

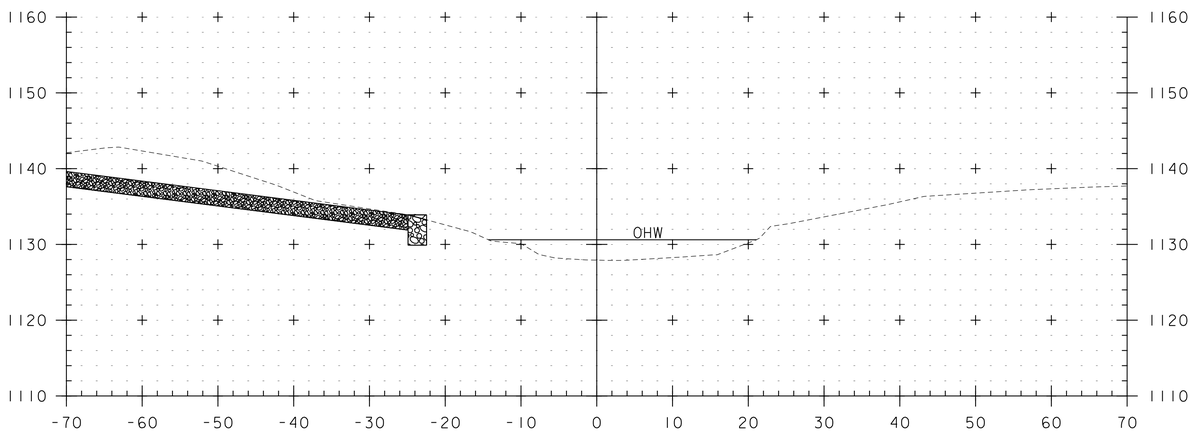

STA. 0+70 LT
END UNCLASSIFIED CHANNEL EXCAVATION
STONE FILL, TYPE IV
GEOTEXTILE UNDER STONE FILL, TYPE IV
GRUBBING MATERIAL

0+70

STA. 0+69 RT
END UNCLASSIFIED CHANNEL EXCAVATION
STONE FILL, TYPE IV
GEOTEXTILE UNDER STONE FILL, TYPE IV
GRUBBING MATERIAL

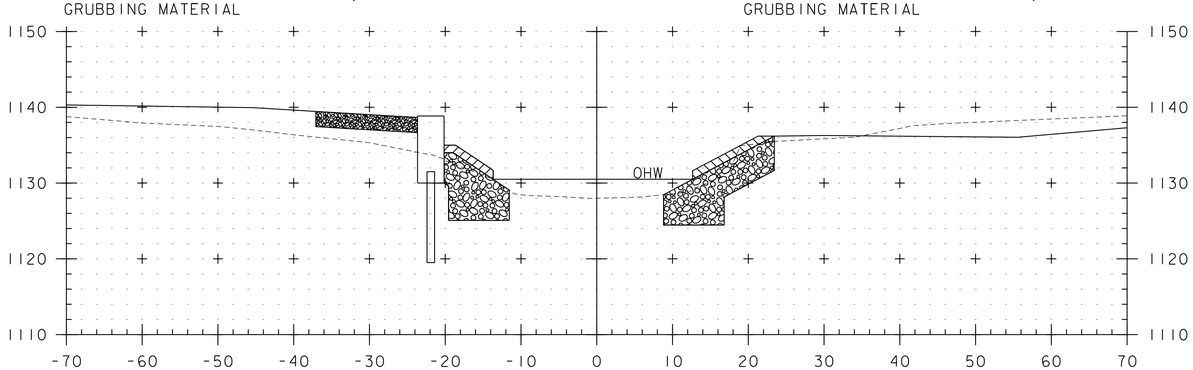

STA. 0+55 LT
BEGIN GRUBBING MATERIAL

0+60

STA. 0+52 RT
BEGIN GRUBBING MATERIAL

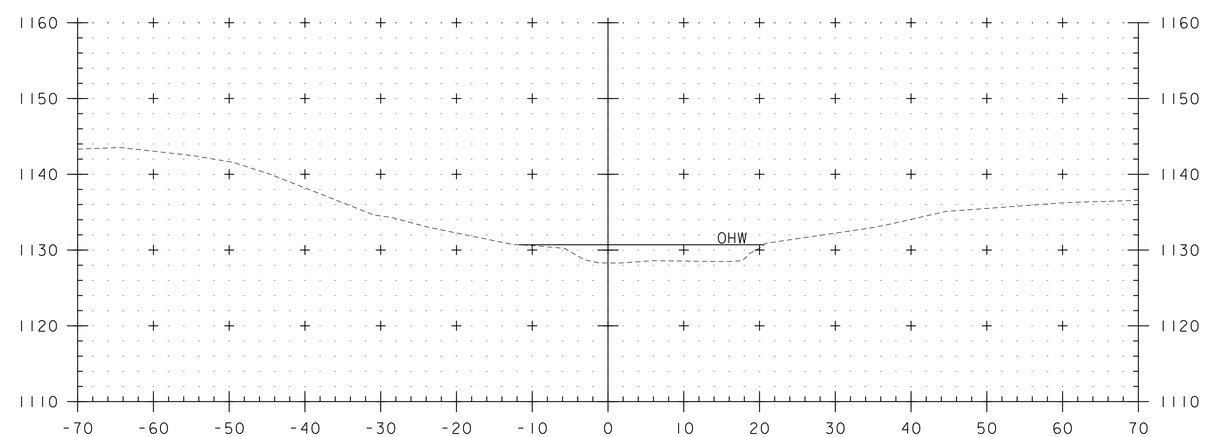

0+80

STA. 0+60 TO STA. 0+80

PROJECT NAME: BARTON	
PROJECT NUMBER: BRO 1449(31)	
FILE NAME: z11j068xschan.dgn	PLOT DATE: 7/15/2014
PROJECT LEADER: J. BYATT	DRAWN BY: M. SMITH
DESIGNED BY: S. BEAUMONT	CHECKED BY: J. BYATT
CHANNEL CROSS SECTIONS 2	SHEET 46 OF 52

CLD 12-017A MODEL: XSCHAN02

EPSC PLAN NARRATIVE

1.1 PROJECT DESCRIPTION

THIS PROJECT INVOLVES THE REMOVAL OF BRIDGE 8, ITS ABUTMENTS AND FOUNDATIONS. BRIDGE 8 WILL BE REPLACED WITH A PRECAST STRUCTURE SPANNING 45 FEET OVER THE ROARING BROOK, ON NEW FOOTINGS ALONG APPROXIMATELY THE SAME ALIGNMENT. BRIDGE 8 IS LOCATED IN THE TOWN OF BARTON, ON ROARING BROOK ROAD, APPROXIMATELY 0.78 MILES EASTERLY OF THE GLOVER/BARTON TOWN LINE. THE WIDTH OF THE BRIDGE WILL BE INCREASED TO 29 FEET.

NOTE: AREA OF DISTURBANCE INCLUDES LIMITS OF EARTH DISTURBANCE WITHIN THE PROJECT AREA, AS WELL AS WASTE, BORROW AND STAGING AREAS, AND OTHER EARTH DISTURBING ACTIVITIES WITHIN OR DIRECTLY ADJACENT TO THE PROJECT LIMITS AS SHOWN ON THE ATTACHED EPSC PLAN.

TOTAL AREA OF DISTURBANCE AS SHOWN ON THE ATTACHED EPSC PLAN IS APPROXIMATELY 0.40 ACRES.

IT IS ANTICIPATED THAT THIS PROJECT WILL LAST ONE CONSTRUCTION SEASON UTILIZING THE ACCELERATED BRIDGE CONSTRUCTION PROGRAM.

1.2 SITE INVENTORY

1.2.1 TOPOGRAPHY

THE TOPOGRAPHY OF THE AREA IS HILLY TO MOUNTAINOUS WITH A MOSTLY WELL ESTABLISHED FOREST WITH OCCASIONAL OPEN AREAS. ROARING BROOK ROAD AND MULTIPLE DRIVEWAYS ARE WITHIN THE PROJECT SITE. THERE IS A RESIDENCE ON THE NORTH SIDE OF THE PROJECT WITH GRASS AND TREE BUFFERS.

1.2.2 DRAINAGE, WATERWAYS, BODIES OF WATER, AND PROXIMITY TO NATURAL OR MAN-MADE WATER FEATURES

THE ROARING BROOK AND AN ARTISAN WELL ARE THE ONLY WATER SOURCES ON THE PROJECT SITE. THE BROOK IS CLASSIFIED AS SINUOUS, NON-ALLUVIAL, NARROW WITH A CONFINED AND ARMORED CHANNEL AT THE SITE. THE STREAM BED CONSISTS OF GRAVEL, COBBLES AND BOULDERS. THE TRIBUTARY AREA AT THE BRIDGE CROSSING IS 10 SQUARE MILES. DUE TO THE NATURE OF THE SURROUNDING TERRAIN THE PROJECT SITE COULD RECEIVE RUNOFF WATER FROM A FEW NEARBY SLOPES.

1.2.3 VEGETATION

THE VEGETATION IN THE PROJECT AREA CONSISTS OF HARDWOOD TREES AND UNDERGROWTH. THE IMPACT TO VEGETATION WILL BE LIMITED TO THAT WHICH IS DIRECTLY AFFECTED BY REPLACEMENT OF THE EXISTING BRIDGE AND SLOPE GRADING. UPON PROJECT COMPLETION, THE CHANNEL WILL BE ARMORED WITH STONE FILL TYPE IV AS SPECIFIED ON THE PLANS. DISTURBED VEGETATION WILL BE REESTABLISHED WITH STANDARD SEED AND MULCH PRACTICES.

1.2.4 SOILS

ALL SOIL DATA CAME FROM THE U.S. DEPARTMENT OF AGRICULTURE SOIL CONSERVATION SERVICE FOR THE COUNTY OF ORLEANS, VERMONT. SOILS ON THE PROJECT SITE ARE BUCKLAND FINE SANDY LOAM, 35% TO 60% SLOPES, VERY STONY, “K FACTOR” = 0.37. THE SOIL IS CONSIDERED HIGHLY ERODIBLE DUE TO SIGNIFICANT SLOPES.

NOTE: K-VALUES GENERALLY INDICATE THE FOLLOWING:
0.0-0.23 = LOW EROSION POTENTIAL
0.24-0.36 = MODERATE EROSION POTENTIAL
0.37 AND HIGHER = HIGH EROSION POTENTIAL

1.2.5 SENSITIVE RESOURCE AREAS

CRITICAL HABITATS: NO
HISTORICAL OR ARCHEOLOGICAL AREAS: YES. ONE ARCHAEOLOGICALLY SENSITIVE AREA SOUTHWEST OF THE BRIDGE AND ONE ARCHAEOLOGICALLY SENSITIVE AREA SOUTHEAST OF THE BRIDGE. THESE AREAS ARE POTENTIALLY SENSITIVE FOR PRE-CONTACT ACTIVITY.
PRIME AGRICULTURAL LAND: NO
THREATENED AND ENDANGERED SPECIES: NO
WATER RESOURCE: ROARING BROOK
WETLANDS: YES. TWO SMALL AREAS, ONE UPSTREAM AND ONE DOWNSTREAM OF THE BRIDGE. THE PROPOSED WORK WILL NOT IMPACT EITHER AREA.

1.3 RISK EVALUATION

THIS PROJECT DOES NOT FALL UNDER THE JURISDICTION OF GENERAL PERMIT 3-9020 FOR STORMWATER RUNOFF FROM CONSTRUCTION SITES. SHOULD CHANGES PRIOR TO OR DURING CONSTRUCTION RESULT IN ONE OR MORE ACRES OF EARTH DISTURBANCE OR SHOULD THE PROJECT BECOME PART OF A LARGER PLAN OF DEVELOPMENT, THE CONTRACTOR WILL BE RESPONSIBLE FOR ANY ADDITIONAL PERMITTING.

1.4 EROSION PREVENTION AND SEDIMENT CONTROL

THE EROSION CONTROL PLANS ARE MEANT AS A GUIDELINE FOR PREVENTING EROSION AND CONTROLLING SEDIMENT TRANSPORT. THE PRINCIPLES OUTLINED IN THIS NARRATIVE CONSIST OF APPLYING MEASURES THROUGHOUT CONSTRUCTION OF THE PROJECT IN ORDER TO MINIMIZE SEDIMENT TRANSPORT TO THE RECEIVING WATERS. THE MEASURES INCLUDE STABILIZATION AND STRUCTURAL PRACTICES, STORM WATER CONTROLS AND OTHER POLLUTION PREVENTION PRACTICES. THEY HAVE BEEN PROPOSED BY THE DESIGNER AS A BASIS FOR PROTECTING RESOURCES AND WILL NEED TO BE BUILT UPON BASED ON THE SPECIFIC MEANS AND METHODS OF THE CONTRACTOR. REFER TO THE LOW RISK SITE HANDBOOK AND APPROPRIATE DETAIL SHEETS FOR SPECIFIC GUIDANCE AND CONSTRUCTION DETAILING.

ALL MEASURES SHALL BE REGULARLY MAINTAINED AND SHALL BE CHECKED FOR SEDIMENT BUILD-UP. SEDIMENT SHALL BE DISPOSED OF AT AN APPROVED SITE WHERE IT WILL NOT BE SUBJECT TO EROSION.

1.4.1 MARK SITE BOUNDARIES

SITE BOUNDARIES AND AREAS CONSTRUCTION EQUIPMENT CAN ACCESS SHALL BE DELINEATED.

PROJECT DEMARCATION FENCING (PDF) SHALL BE USED TO PHYSICALLY MARK SITE BOUNDARIES.

1.4.2 LIMIT DISTURBANCE AREA

PREVENTING INITIAL SOIL EROSION BY MINIMIZING THE EXPOSED AREA IS MUCH MORE EFFECTIVE THAN TREATING ERODED SEDIMENT. EARTH DISTURBANCE CAN BE MINIMIZED THROUGH CONSTRUCTION PHASING BY ONLY OPENING UP EARTH AS NECESSARY. THIS CAN LIMIT THE AREA THAT WILL BE DISTURBED AND EXPOSED TO EROSION. EMPLOY TEMPORARY CONSTRUCTION STABILIZATION PRACTICES IN INCREMENTAL STAGES AS PHASES CHANGE. FOR PROJECTS WHICH FALL UNDER THE CONSTRUCTION GENERAL PERMIT, ONLY THE ACREAGE LISTED ON THE PERMIT AUTHORIZATION MAY BE EXPOSED AT ANY GIVEN TIME.

MAINTAINING VEGETATED BUFFERS ALONG STREAM BANKS, WETLANDS OR OTHER SENSITIVE AREAS IS A CRUCIAL EROSION AND SEDIMENT CONTROL MEASURE THAT SHOULD BE ESTABLISHED WHEREVER POSSIBLE.

1.4.3 SITE ENTRANCE/EXIT STABILIZATION

TRACKING OF SEDIMENT ONTO PUBLIC HIGHWAYS SHALL BE MINIMIZED TO REDUCE THE POTENTIAL FOR RUNOFF ENTERING RECEIVING WATERS. INSTALLATION SHALL COINCIDE WITH THE CONTRACTORS PROGRESS SCHEDULE.

STABILIZED CONSTRUCTION ENTRANCES ARE NOT ANTICIPATED TO BE NEEDED AS DESIGNED. THE EXISTING ROADWAY WILL BE CLOSED TO ALL TRAFFIC AND WILL BE UTILIZED TO ACCESS THE BRIDGE.

1.4.4 INSTALL SEDIMENT BARRIERS

SEDIMENT BARRIERS SHALL BE UTILIZED TO INTERCEPT RUNOFF AND ALLOW SUSPENDED SEDIMENT TO SETTLE OUT. THEY SHALL BE INSTALLED PRIOR TO ANY UP SLOPE WORK.

SILT FENCE WILL BE INSTALLED AS PROPOSED ON THE EPSC PLAN.

1.4.5 DIVERT UPLAND RUNOFF

DIVERSIONARY MEASURES SHALL BE USED TO INTERCEPT RUNOFF FROM ABOVE THE CONSTRUCTION AND DIRECT IT AROUND THE DISTURBED AREA SO THAT CLEAN WATER DOES NOT BECOME MUDDIED WHILE TRAVELING OVER EXPOSED SOILS ON THE CONSTRUCTION SITE.

DIVERSION MEASURES ARE NOT ANTICIPATED TO BE NEEDED AS DESIGNED.

1.4.6 SLOW DOWN CHANNELIZED RUNOFF

CHECK STRUCTURES SHALL BE UTILIZED TO REDUCE THE VELOCITY, AND THUS THE EROSIVE POTENTIAL, OF CONCENTRATED FLOW IN CHANNELS.

STONE CHECK DAMS WILL BE INSTALLED AS PROPOSED ON THE EPSC PLAN, AT A MINIMUM.

1.4.7 CONSTRUCT PERMANENT CONTROLS

PERMANENT STORMWATER TREATMENT DEVICES SHALL BE INSTALLED AS SHOWN ON THE PLANS AND IN ACCORDANCE WITH PERMIT CONDITIONS.

PERMANENT STORMWATER TREATMENT DEVICES ARE NOT ANTICIPATED TO BE NEEDED AS DESIGNED.

1.4.8 STABILIZE EXPOSED SOILS DURING CONSTRUCTION

ALL AREAS OF DISTURBANCE MUST HAVE TEMPORARY STABILIZATION IN PLACE WITHIN 48 HOURS OF DISTURBANCE OR IN ACCORDANCE WITH THE CONSTRUCTION GENERAL PERMIT 3-9020 AUTHORIZATION.

SURFACE ROUGHENING OF ALL EXPOSED SLOPES, COMBINED WITH TEMPORARY MULCHING, SHALL BE UTILIZED ON A REGULAR BASIS. BIODEGRADABLE EROSION CONTROL MATTING OR AN EQUIVALENT SHALL BE USED TO STABILIZE ALL SLOPES STEEPER THAN 1:3.

THE FORECAST OF RAINFALL EVENTS SHALL TRIGGER IMMEDIATE PROTECTION OF EXPOSED SOILS.

1.4.9 WINTER STABILIZATION

VARIOUS MEASURES SPECIFIC TO WINTER MAY BE NECESSARY SHOULD THE PROJECT EXTEND INTO WINTER (OCTOBER 15 THROUGH APRIL 15). REFER TO THE LOW RISK SITE HANDBOOK FOR GUIDANCE.

WINTER STABILIZATION IS NOT ANTICIPATED TO BE NEEDED AS DESIGNED.

1.4.10 STABILIZE SOIL AT FINAL GRADE

EXPOSED SOIL MUST BE STABILIZED WITHIN 48 HOURS OF REACHING FINAL GRADE.

SEED, MULCH, FERTILIZER AND LIME SHALL BE USED TO ESTABLISH PERMANENT VEGETATION. FOR SLOPES STEEPER THAN 1:3, BIODEGRADABLE EROSION CONTROL MATTING OR AN EQUIVALENT SHALL BE USED INSTEAD OF MULCH.

TEMPORARY EROSION MATTING SHALL BE USED TO STABILIZE ROADWAY SLOPES AND STONE FILL SHALL BE USED TO STABILIZE THE CHANNEL AS SHOWN ON THE PLANS.

1.4.11 DE-WATERING ACTIVITIES

DISCHARGE FROM DEWATERING ACTIVITIES THAT FLOWS OFF OF THE CONSTRUCTION SITE MUST NOT CAUSE OR CONTRIBUTE TO A VIOLATION OF THE VERMONT WATER QUALITY STANDARDS.

TREATMENT OF DISCHARGE FROM DEWATERING ACTIVITIES IS ANTICIPATED. THE SPECIFIC MEANS FOR TREATMENT OF DISCHARGE SHALL BE PROVIDED BY THE CONTRACTOR.

1.4.12 INSPECT YOUR SITE

INSPECT THE PROJECT SITE BASED ON SPECIAL PROVISION REQUIREMENTS OR CONSTRUCTION GENERAL PERMIT AUTHORIZATION STIPULATIONS.

1.5 SEQUENCE AND STAGING

THIS SECTION WILL BE DEVELOPED BY THE CONTRACTOR USING THE GUIDANCE OUTLINED IN THE VTRANS EPSC PLAN CONTRACTOR CHECKLIST.

1.5.1 CONSTRUCTION SEQUENCE

1.5.2 OFF-SITE ACTIVITIES

IN ADDITION TO THE CONTRACTOR CHECKLIST ANY ACTIVITIES OUTSIDE THE CONSTRUCTION LIMITS SHALL FOLLOW SUBSECTIONS 105.25- 105.29 OF THE STANDARD SPECIFICATIONS FOR CONSTRUCTION.

1.5.3 UPDATES

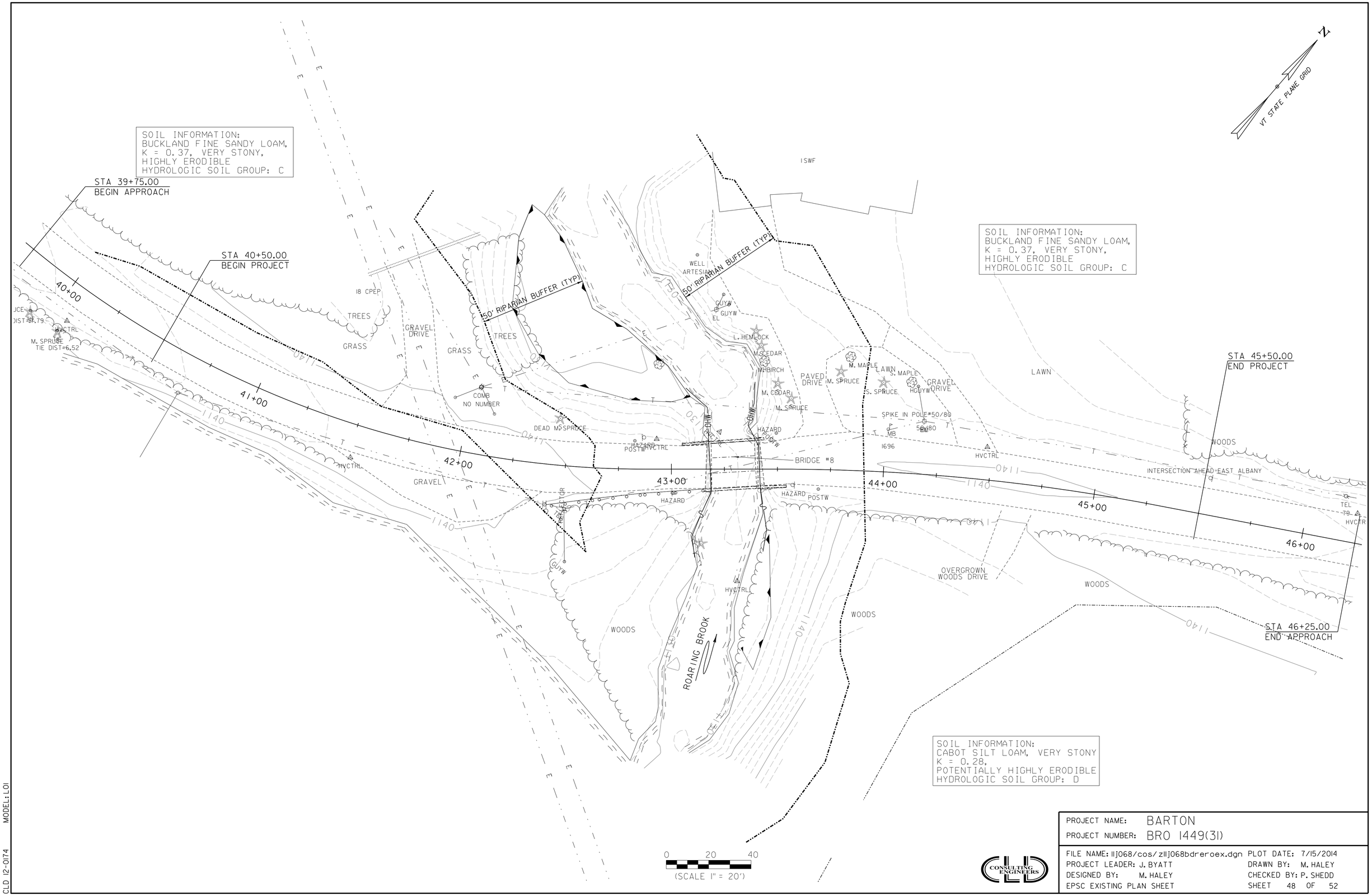

PROJECT NAME:	BARTON
PROJECT NUMBER:	BRO 1449(31)

FILE NAME: 11j068/cos/z11j068bdreroex.dgn	PLOT DATE: 7/15/2014
PROJECT LEADER: J. BYATT	DRAWN BY: M. HALEY
DESIGNED BY: M. HALEY	CHECKED BY: P. SHEDD
EPSC EXISTING PLAN SHEET	SHEET 48 OF 52

CONSULTING ENGINEERS

CLD 12-0174 MODEL: L01

PROJECT NAME: BARTON	
PROJECT NUMBER: BRO 1449(31)	
FILE NAME: 11j068/cos/z11j068bdrerocn.dgn	PLOT DATE: 7/15/2014
PROJECT LEADER: J. BYATT	DRAWN BY: M. HALEY
DESIGNED BY: M. HALEY	CHECKED BY: P. SHEDD
EPSC CONSTRUCTION PLAN SHEET	SHEET 49 OF 52

CONSULTING ENGINEERS

CLD 12-0174 MODEL: L01

STA 39+75.00
BEGIN APPROACH

STA 40+50.00
BEGIN PROJECT

STA. 43+52.33
END BRIDGE

STA 45+50.00
END PROJECT

STA. 43+04.67
BEGIN BRIDGE

STA 46+25.00
END APPROACH

APPROX R.O.W.

ROARING BROOK RD
TO WEST GLOVER

ROARING BROOK RD
TO BARTON

50' RIPARIAN BUFFER (TYP)

BRIDGE #8

40+00
41+00
42+00
43+00
44+00
45+00
46+00

TREES
GRASS
GRAVEL DRIVE
PAVED DRIVE
LAWN
WOODS
OVERGROWN WOODS DRIVE
ROARING BROOK
CZ
T
E
1140

NOTE
SEE CROSS SECTIONS FOR FINISHED GRADING.

0 20 40
(SCALE 1" = 20')

PROJECT NAME: BARTON	
PROJECT NUMBER: BRO 1449(31)	
FILE NAME: 11j068/cos/ z11j068bdrerofl.dgn	PLOT DATE: 7/15/2014
PROJECT LEADER: J. BYATT	DRAWN BY: M. HALEY
DESIGNED BY: M. HALEY	CHECKED BY: P. SHEDD
EPSC FINAL PLAN SHEET	SHEET 50 OF 52

CONSULTING ENGINEERS

CLD 12-0174 MODEL: L01

VAOT RURAL AREA MIX					
	LBS/AC				
% WEIGHT	BROADCAST	HYDROSEED	NAME	GERM %	PURITY %
37.5%	22.5	45	CREEPING RED FESCUE	85%	98%
37.5%	22.5	45	TALL FESCUE	90%	95%
5.0%	3	6	RED TOP	90%	95%
15.0%	9	18	BIRDSFOOT TREFOIL	85%	98%
5.0%	3	6	ANNUAL RYE GRASS	85%	95%
100%	60	120			

VAOT URBAN AREA MIX					
	LBS/AC				
% WEIGHT	BROADCAST	HYDROSEED	NAME	GERM %	PURITY %
42.5%	34	68	CREEPING RED FESCUE	85%	98%
10.0%	8	16	PERENNIAL RYE GRASS	90%	95%
42.5%	34	68	KENTUCKY BLUE GRASS	85%	85%
5.0%	4	8	ANNUAL RYE GRASS	85%	95%
100%	80	160			

SOIL AMENDMENT GUIDANCE			
FERTILIZER		LIME	
BROADCAST	HYDROSEED	BROADCAST	HYDROSEED
10-20-10	*FOLLOW*	PELLETIZED	*FOLLOW*
500 LBS/AC	*MANUFACTURER*	2 TONS/AC	*MANUFACTURER*

CONSTRUCTION GUIDANCE

1. RURAL SEED MIX: USE AS INDICATED IN THE PLANS AND/OR FOR ALL ESTABLISHED UPLAND (NON WETLAND) AREAS DISTURBED BY THE CONTRACTOR.
2. URBAN SEED MIX: USE AS INDICATED IN THE PLANS AND/OR FOR ALL ESTABLISHED LAWN AREAS DISTURBED BY THE CONTRACTOR.
3. ALL SEED MIXTURES: SHALL NOT HAVE A WEED CONTENT EXCEEDING 0.40% BY WEIGHT AND SHALL BE FREE OF ALL NOXIOUS SEED.
4. FERTILIZER AND LIMESTONE: SHALL FOLLOW RATES SHOWN ON PLAN OR AS DIRECTED BY THE ENGINEER
5. HAY MULCH: TO BE PLACED ON EARTH SLOPES AT THE RATE OF 2 TONS/ACRE, ACHIEVE 90% GROUND COVER OR AS DIRECTED BY THE ENGINEER.
6. TOPSOIL: TO BE USED WITH SEED AS INDICATED ON THE PLANS, OR AS DIRECTED BY THE ENGINEER.
7. HYDROSEEDING: ALTHOUGH GUIDANCE IS GIVEN ABOVE THE SITE CONDITIONS AND THE TYPE OF HYDROSEED WILL ULTIMATELY DICTATE THE AMOUNTS AND TYPES OF SOIL AMENDMENTS TO BE APPLIED
8. TURF ESTABLISHMENT: PLACING SEED, FERTILIZER, LIME AND MULCH PRIOR TO SEPTEMBER 15 AND AFTER APRIL 15 CAN BETTER ENSURE A VIGOROUS GROWTH OF GRASS.

ADAPTED FROM VTRANS TECHNICAL LANDSCAPE MANUAL FOR ROADWAYS AND TRANSPORTATION FACILITIES

TURF ESTABLISHMENT

REVISIONS	
JUNE 23, 2009	WHF
JANUARY 15, 2010	WHF
FEBRUARY 16, 2011	WHF

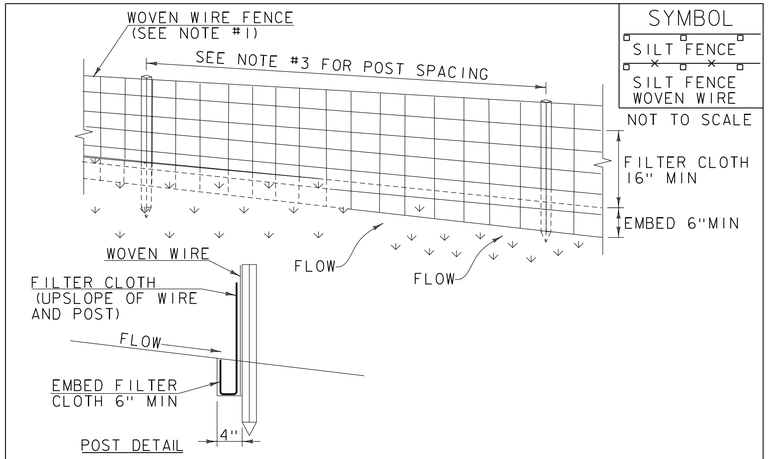

CONSTRUCTION SPECIFICATIONS

1. WOVEN WIRE REINFORCED FENCE IS REQUIRED WITHIN 100' UPSLOPE OF RECEIVING WATERS WHEN THE PROJECT FALLS UNDER A CONSTRUCTION STORMWATER PERMIT. WOVEN WIRE SHALL BE A MIN. 14 GAUGE WITH A 6" MAX. MESH OPENING.
2. FILTER CLOTH SHALL BE EITHER FILTER X, MIRAFI100X, STABILINKA T140N OR APPROVED EQUIVALENT.
3. POST SPACING FOR WIRE-BACKED FENCE SHALL BE 10' MAXIMUM. FOR FILTER-CLOTH FENCE, WHEN ELONGATION IS >50%, POST SPACING SHALL NOT EXCEED 4' AND WHEN ELONGATION IS <50%, POST SPACING SHALL NOT EXCEED 6'.
4. WOVEN WIRE FENCE IS TO BE FASTENED SECURELY TO FENCE POSTS WITH WIRE TIES. FILTER CLOTH IS TO BE FASTENED SECURELY TO WOVEN WIRE FENCE WITH TIES SPACED EVERY 24" AT TOP AND MID SECTION.
5. WHEN TWO SECTIONS OF FILTER CLOTH ADJOIN EACH OTHER THEY SHALL BE OVER-LAPPED BY 6" AND FOLDED.
6. MAINTENANCE SHALL BE PERFORMED AS NEEDED AND MATERIAL REMOVED WHEN SEDIMENT REACHES HALF OF FABRIC HEIGHT.

ADAPTED FROM DETAILS PROVIDED BY: NEW YORK STATE DEC
ORIGINALLY DEVELOPED BY USDA-NRCS
VERMONT DEPARTMENT OF ENVIRONMENTAL CONSERVATION

SILT FENCE

NOTES:
REFER TO "THE VERMONT STANDARDS & SPECIFICATIONS FOR EROSION PREVENTION & SEDIMENT CONTROL -2006- "FROM THE VT AGENCY OF NATURAL RESOURCES FOR ADDITIONAL GUIDANCE.

THIS WORK SHALL BE PERFORMED IN ACCORDANCE WITH SECTION 649 AND AS SHOWN IN THE PLANS FOR GEOTEXTILE FOR SILT FENCE (PAY ITEM 649.51).

REVISIONS	
MARCH 21, 2008	WHF
DECEMBER 11, 2008	WHF
JANUARY 13, 2009	WHF

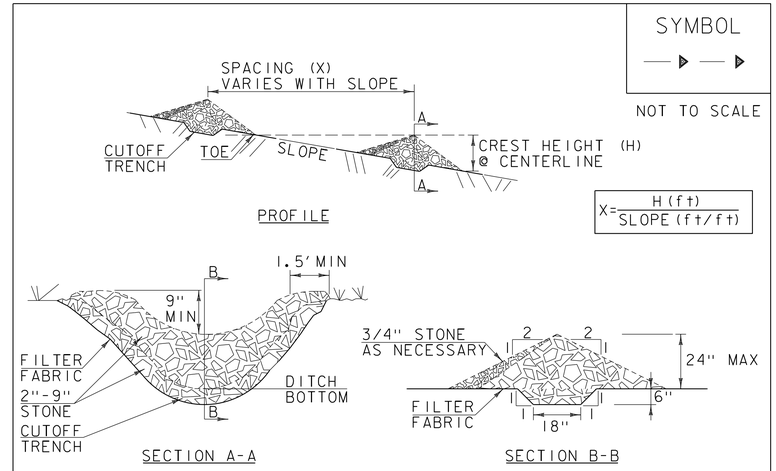

CONSTRUCTION SPECIFICATIONS

1. STONE WILL BE PLACED ON A FILTER FABRIC FOUNDATION.
2. CHECK DAMS SHALL BE SPACED SO THAT THE ELEVATION OF THE CREST OF THE DOWNSTREAM DAM IS AT THE SAME ELEVATION AS THE TOE OF THE UPSTREAM DAM.
3. 3/4" FILTERING STONE MAY BE ADDED TO THE FACE OF THE CHECK DAM AS NECESSARY.
4. EXTEND THE STONE A MINIMUM OF 1.5' BEYOND THE DITCH BANKS TO PREVENT CUTTING AROUND THE DAM.
5. PROTECT CHANNEL DOWNSTREAM OF THE LOWEST CHECK DAM FROM SCOUR AND EROSION WITH STONE OR LINER AS APPROPRIATE.
6. ENSURE THAT CHANNEL APPURTENANCES SUCH AS CULVERT ENTRANCES BELOW CHECK DAMS ARE NOT SUBJECT TO DAMAGE OR BLOCKAGE FROM DISPLACED STONE.
7. MAXIMUM DRAINAGE AREA 2 ACRES.

ADAPTED FROM DETAILS PROVIDED BY: NEW YORK STATE DEC
ORIGINALLY DEVELOPED BY USDA-NRCS
VERMONT DEPARTMENT OF ENVIRONMENTAL CONSERVATION

CHECK DAM

NOTES:
REFER TO "THE VERMONT STANDARDS & SPECIFICATIONS FOR EROSION PREVENTION & SEDIMENT CONTROL -2006- "FROM THE VT AGENCY OF NATURAL RESOURCES FOR ADDITIONAL GUIDANCE.

THIS WORK SHALL BE PERFORMED IN ACCORDANCE WITH SECTION 653 FOR TEMPORARY STONE CHECK DAM, TYPE I (PAY ITEM 653.25)

REVISIONS	
MARCH 21, 2008	WHF
JANUARY 8, 2009	WHF

CLD 12-0174 MODEL: EC02

PROJECT NAME: BARTON	
PROJECT NUMBER: BRO 1449(31)	
FILE NAME: 11j068/cos/z11j068erodet.dgn	PLOT DATE: 7/15/2014
PROJECT LEADER: J. BYATT	DRAWN BY: M. HALEY
DESIGNED BY: M. HALEY	CHECKED BY: P. SHEDD
EPSC DETAILS 1	SHEET 51 OF 52

CONSULTING ENGINEERS

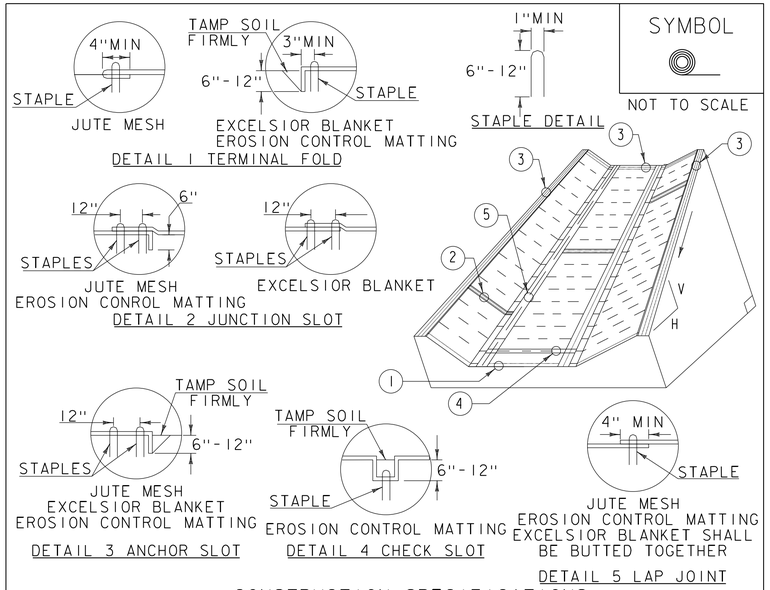

CONSTRUCTION SPECIFICATIONS

1. EROSION MATTING, CHECK SLOTS, SHALL BE SPACED IN DITCH CHANNEL SO THAT ONE OCCURS WITHIN EACH 50′ ON SLOPES OF MORE THAN 4% AND LESS THAN 6%. ON SLOPES OF 6% OR MORE, THEY SHALL BE SPACED SO THAT ONE OCCURS WITHIN EACH 25′.
2. APPLY FERTILIZER, LIME SEED PRIOR TO PLACING MATTING.
3. STAPLES ARE TO BE PLACED ALTERNATELY, IN COLUMNS APPROXIMATELY 2′ APART AND IN ROWS APPROXIMATELY 3′ APART. APPROXIMATELY 175 STAPLES ARE REQUIRED PER 4′X225′ ROLL OF MATERIAL AND 125 STAPLES ARE REQUIRED PER 4′X150′ ROLL OF MATERIAL.
4. DISTURBED AREAS SHALL BE SMOOTHLY GRADED. EROSION CONTROL MATERIAL SHALL BE PLACED LOOSELY OVER GROUND SURFACE. DO NOT STRETCH.
5. ALL TERMINAL ENDS AND TRANSVERSE LAPS SHALL BE STAPLED AT APPROXIMATELY 12" INTERVALS.

ADAPTED FROM DETAILS PROVIDED BY: NEW YORK STATE DEC
ORIGINALLY DEVELOPED BY USDA-NRCS
VERMONT DEPARTMENT OF ENVIRONMENTAL CONSERVATION

ROLLED EROSION CONTROL PRODUCT (RECP) DITCH

NOTES:
REFER TO "THE VERMONT STANDARDS & SPECIFICATIONS FOR EROSION PREVENTION & SEDIMENT CONTROL -2006- "FROM THE VT AGENCY OF NATURAL RESOURCES FOR ADDITIONAL GUIDANCE.
THIS WORK SHALL BE PERFORMED IN ACCORDANCE WITH SECTION 653 AND AS SHOWN IN THE PLANS FOR TEMPORARY EROSION MATTING (PAY ITEM 653.20).

REVISIONS	
MARCH 8, 2007	JMF
APRIL 16, 2007	WHF
JANUARY 13, 2009	WHF

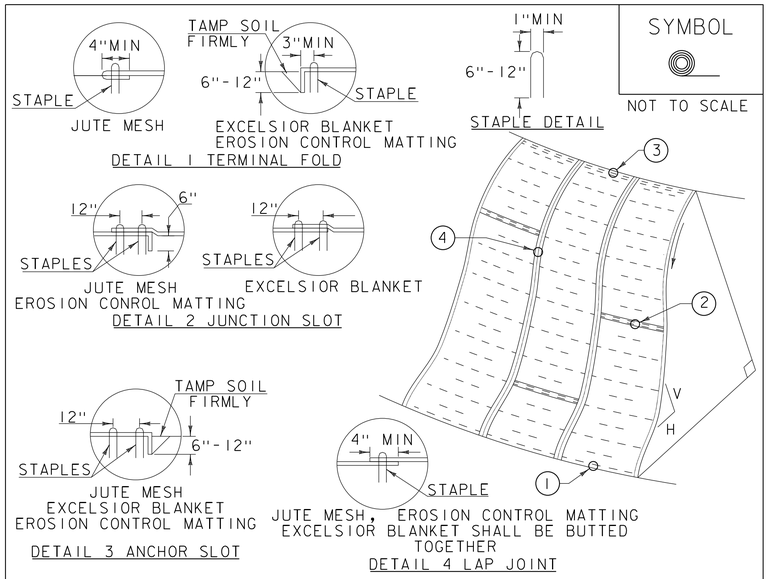

CONSTRUCTION SPECIFICATIONS

1. APPLY TO SLOPES GREATER THAN 3H:1V OR WHERE NECESSARY TO AID IN ESTABLISHING VEGETATION.
2. APPLY FERTILIZER, LIME SEED PRIOR TO PLACING MATTING.
3. STAPLES ARE TO BE PLACED ALTERNATELY, IN COLUMNS APPROXIMATELY 2′ APART AND IN ROWS APPROXIMATELY 3′ APART. APPROXIMATELY 175 STAPLES ARE REQUIRED PER 4′X225′ ROLL OF MATERIAL AND 125 STAPLES ARE REQUIRED PER 4′X150′ ROLL OF MATERIAL.
4. DISTURBED AREAS SHALL BE SMOOTHLY GRADED. EROSION CONTROL MATERIAL SHALL BE PLACED LOOSELY OVER GROUND SURFACE. DO NOT STRETCH.
5. ALL TERMINAL ENDS AND TRANSVERSE LAPS SHALL BE STAPLED AT APPROXIMATELY 12" INTERVALS.

ADAPTED FROM DETAILS PROVIDED BY: NEW YORK STATE DEC
ORIGINALLY DEVELOPED BY USDA-NRCS
VERMONT DEPARTMENT OF ENVIRONMENTAL CONSERVATION

ROLLED EROSION CONTROL PRODUCT (RECP) SIDE SLOPE

NOTES:
REFER TO "THE VERMONT STANDARDS & SPECIFICATIONS FOR EROSION PREVENTION & SEDIMENT CONTROL -2006- "FROM THE VT AGENCY OF NATURAL RESOURCES FOR ADDITIONAL GUIDANCE.
THIS WORK SHALL BE PERFORMED IN ACCORDANCE WITH SECTION 653 AND AS SHOWN IN THE PLANS FOR TEMPORARY EROSION MATTING (PAY ITEM 653.20).

REVISIONS	
APRIL 16, 2007	JMF
JANUARY 13, 2009	WHF

PROJECT NAME: BARTON
PROJECT NUMBER: BRO 1449(31)

FILE NAME: 11j068/cos/z11j068erodet.dgn
PROJECT LEADER: J. BYATT
DESIGNED BY: M. HALEY
EPSC DETAILS 2

PLOT DATE: 7/15/2014
DRAWN BY: M. HALEY
CHECKED BY: P. SHEDD
SHEET 52 OF 52

CLD 12-0174 MODEL: EC03

CONCRETE GENERAL NOTES

1. ALL EXPOSED EDGES OF CONCRETE SHALL BE CHAMFERED 1" x 1"
2. REINFORCING STEEL SIZE AND SPACING SHOWN IN THE PLANS IS BASED ON 60 KSI STEEL, UNLESS NOTED OTHERWISE. WITH THE ENGINEER'S PERMISSION, BAR SIZE AND SPACING MAY BE MODIFIED ACCORDING TO THE LATEST AASHTO LRFD BRIDGE DESIGN SPECIFICATION AND STRUCTURES DESIGN MANUAL WHEN USING HIGHER STRENGTH STEEL.

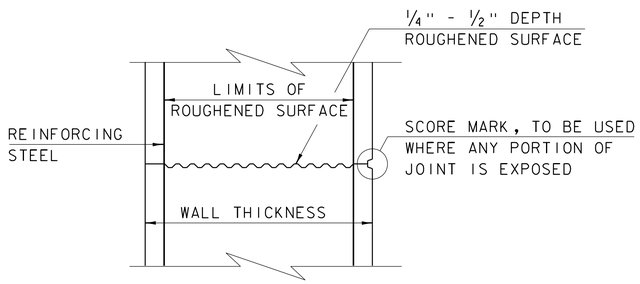

TYPICAL HORIZONTAL CONSTRUCTION JOINT

(NOT TO SCALE)

1. THE SURFACE OF THE CONCRETE CONSTRUCTION JOINTS SHALL BE CLEANED AND FREE OF LAITANCE.
2. IMMEDIATELY BEFORE NEW CONCRETE IS PLACED, ALL CONSTRUCTION JOINTS SHALL BE WETTED AND STANDING WATER REMOVED.

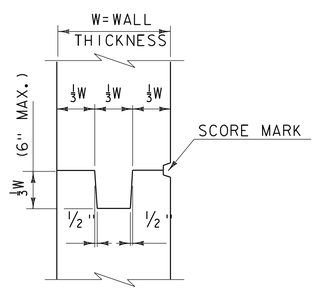

TYPICAL CONCRETE CONSTRUCTION JOINT

(NOT TO SCALE)

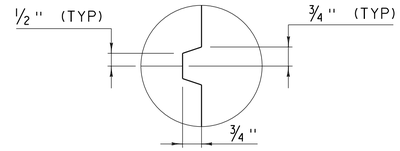

SCORE MARK DETAIL

(NOT TO SCALE)

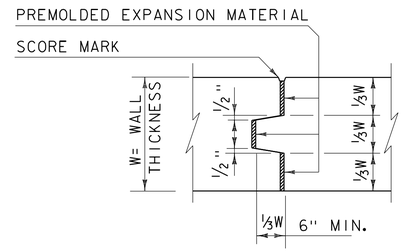

TYPICAL CONCRETE EXPANSION JOINT

(NOT TO SCALE)

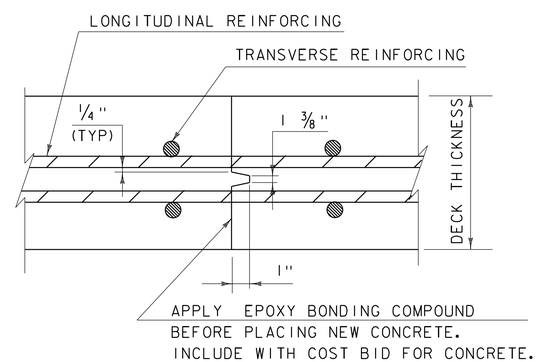

TRANSVERSE BRIDGE SLAB CONSTRUCTION JOINT DETAILS

(NOT TO SCALE)

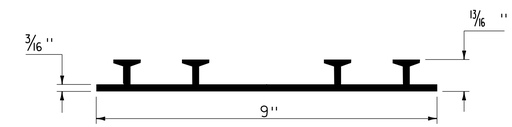

P.V.C. WATERSTOP FOR CONSTRUCTION JOINTS

(NOT TO SCALE)

PAYMENT FOR THE P.V.C. WATERSTOP SHALL BE INCIDENTAL TO THE UNIT BID PRICE FOR THE ADJACENT CONCRETE.

OTHER CONFIGURATIONS OF WATERSTOP MAY BE USED UPON APPROVAL OF THE ENGINEER.

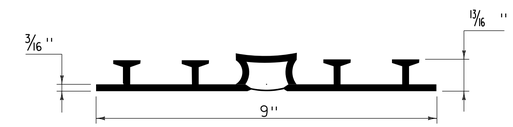

P.V.C. WATERSTOP FOR EXPANSION JOINTS

(NOT TO SCALE)

PAYMENT FOR THE P.V.C. WATERSTOP SHALL BE INCIDENTAL TO THE UNIT BID PRICE FOR THE ADJACENT CONCRETE.

OTHER CONFIGURATIONS OF WATERSTOP MAY BE USED UPON APPROVAL OF THE ENGINEER.

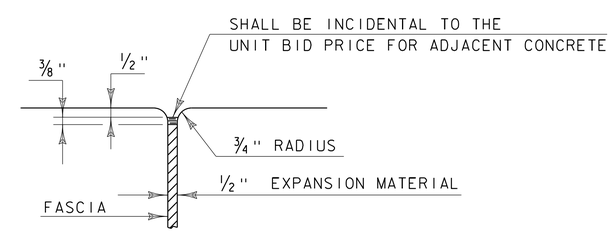

JOINT BETWEEN FASCIA AND WINGWALL

(NOT TO SCALE)

REVISIONS	
MAY 7, 2010	APPROVED FOR USE BY VAOT STRUCTURES SECTION
FEBRUARY 9, 2012	REBAR SUBSTITUTION ALLOWANCE ADDED TO CONCRETE GENERAL NOTES.

CONCRETE DETAILS AND NOTES

VERMONT AGENCY OF TRANSPORTATION
STRUCTURES SECTION

STRUCTURES DETAIL

SD-501.00

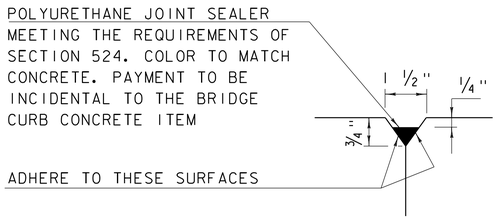

DETAIL "B"
(NOT TO SCALE)

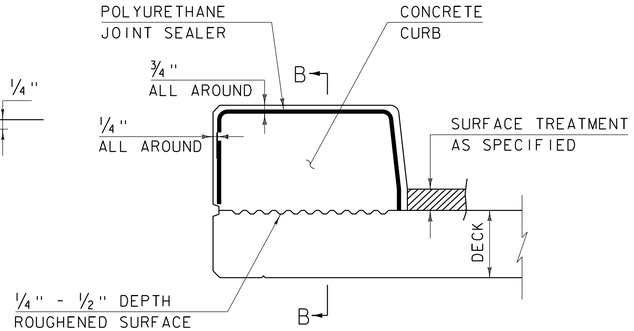

CONCRETE CURB JOINT SECTION
(NOT TO SCALE)

1. SEE TYPICAL HORIZONTAL CONSTRUCTION JOINT DETAIL FOR ADDITIONAL INFORMATION

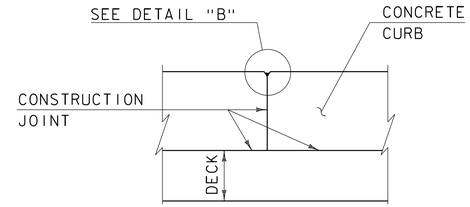

SECTION B - B
(NOT TO SCALE)

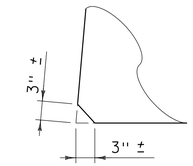

ACUTE ANGLE CLIP DETAIL
(NOT TO SCALE)

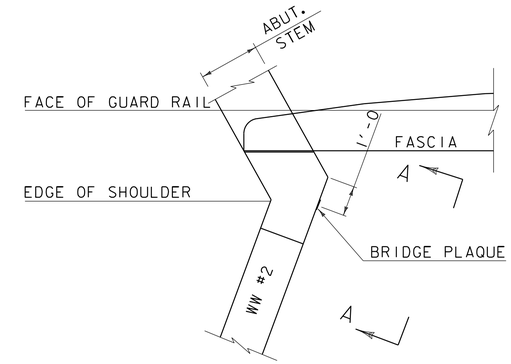

PLAN

CONCRETE CURB JOINT NOTES

1. CONCRETE CURBS MAY BE PLACED IN ONE CONTINUOUS OPERATION IF AN APPROVED SHRINKAGE REDUCING ADMIXTURE LISTED IN THE SPECIAL PROVISIONS IS USED WITH THE CONCRETE MIX DESIGN. PAYMENT FOR THE SHRINKAGE REDUCING ADMIXTURE WILL BE INCIDENTAL TO THE BRIDGE CURB CONCRETE ITEM.

2. IF THE CONTRACTOR CHOOSES NOT TO USE AN APPROVED SHRINKAGE REDUCING ADMIXTURE, THE CURBS SHALL BE CONSTRUCTED WITH CONSTRUCTION JOINTS SPACED AT A MAXIMUM OF 15'-0" CENTER TO CENTER AND 2'-0" MINIMUM FROM THE CENTER OF NEAREST BRIDGE RAILING POST.

3. ON MULTI-SPAN CONTINUOUS SUPERSTRUCTURES, REGARDLESS OF WHETHER APPROVED SHRINKAGE REDUCING ADMIXTURE IS USED, CURB JOINTS SHALL BE LOCATED OVER THE CENTERLINE OF PIERS AND 7'-0" EACH SIDE OF THE CENTERLINE OF EACH PIER.

4. WHEN CURB JOINTS ARE USED THE CURBS SHALL BE PLACED IN ALTERNATE SECTIONS WITH A MINIMUM OF 48 HOUR DELAY BETWEEN ADJACENT PLACEMENTS.

5. LONGITUDINAL REINFORCING SHALL BE CONTINUOUS THROUGH CURB CONSTRUCTION JOINTS. CURB STIRRUP BARS SHALL BE TURNED AS NECESSARY TO MAINTAIN COVER IN THE FLARED CURB ENDS.

6. THE JOINT SPACING AND DETAILS SHOWN SHALL APPLY TO SIDEWALKS WHEN SHOWN IN THE PLANS.

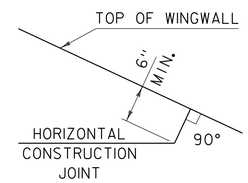

HORIZONTAL WINGWALL CONSTRUCTION JOINT
(NOT TO SCALE)

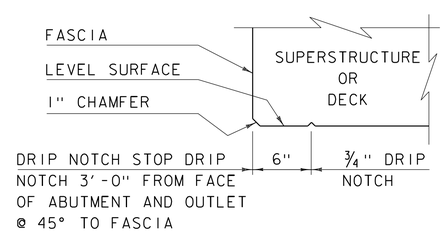

DRIP NOTCH DETAIL
(NOT TO SCALE)

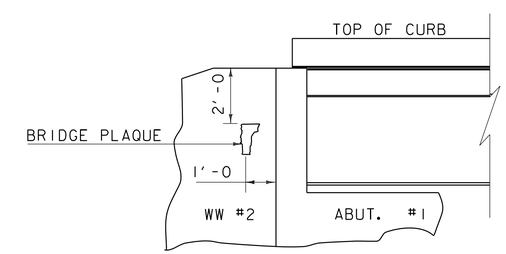

VIEW "A - A"

BRIDGE PLAQUE
(NOT TO SCALE)

THE BRIDGE PLAQUE WILL BE SUPPLIED BY THE AGENCY OF TRANSPORTATION AND SHALL BE INSTALLED BY THE CONTRACTOR AT ABUTMENT #1 ON THE RIGHT SIDE AS SHOWN OR AS DIRECTED BY THE ENGINEER.

PAYMENT FOR INSTALLATION OF THE BRIDGE PLAQUE SHALL BE INCIDENTAL TO THE ADJACENT CONCRETE.

REVISIONS

MAY 7, 2010	APPROVED FOR USE BY VAOT STRUCTURES SECTION
JUNE 4, 2010	MODIFIED AND ADDED TWO DETAILS
OCTOBER 10, 2012	MODIFIED HORZ. JOINT WINGWALL ADD 6" MIN. DIMENSION

CONCRETE DETAILS AND NOTES

VERMONT AGENCY OF TRANSPORTATION
STRUCTURES - SECTION

STRUCTURES DETAIL
SD-502.00

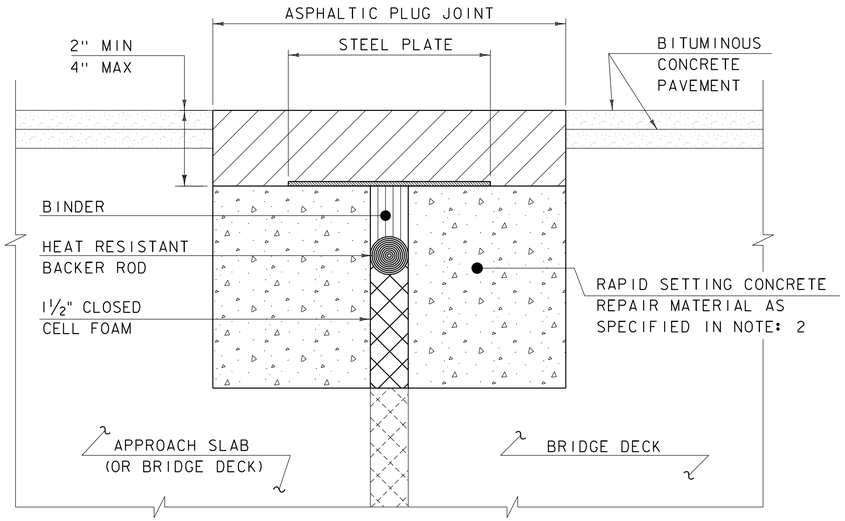

ASPHALTIC PLUG JOINT DETAIL - REHAB

NOTES:

1. THE CONTRACTOR SHALL REMOVE ALL ASPHALTIC PLUG JOINT MATERIAL AND DETERIORATED CONCRETE AS DIRECTED BY THE ENGINEER. REMOVAL OF THE FIRST 4 INCHES OF MATERIAL SHALL BE INCLUDED IN THE BID PRICE FOR ITEM 516.10 BRIDGE EXPANSION JOINT, ASPHALTIC PLUG. ANY REMOVAL OF MATERIAL GREATER THAN 4 INCHES SHALL BE INCLUDED IN THE BID PRICE OF ITEM 580.20 RAPID SETTING CONCRETE REPAIR MATERIAL WITH COARSE AGGREGATE.

2. THE CONTRACTOR SHALL REPLACE REMOVED MATERIAL THAT IS LESS THAN 4" FROM FINISHED GRADE WITH ASPHALTIC PLUG JOINT MATERIAL MEETING THE REQUIREMENTS OF SUBSECTION 707.15. ALL REMOVED MATERIAL THAT IS GREATER THAN 4 INCHES FROM FINISHED GRADE SHALL BE REPLACED WITH RAPID SETTING CONCRETE REPAIR MATERIAL WITH COARSE AGGREGATE MEETING THE REQUIREMENTS OF SUBSECTION 780.04.

3. REINFORCING STEEL NOT SHOWN FOR CLARITY.

4. PLACE 1/4" THICK BY 8" WIDE SECTIONS OF STEEL PLATE OVER THE CENTER OF THE MOVEMENT GAP. SECURE THE PLATES FROM MOVING BY INSERTING LOCATING PINS THROUGH THE PRE-STAMPED HOLES INTO BACKER ROD AND COVER WITH HOT BINDER. THE STEEL PLATES MAY BE OMITTED WHERE THE ENGINEER DETERMINES THAT THE APPROACH SLAB OR BRIDGE DECK WILL PROVIDE INADEQUATE SUPPORT AND WHERE VERTICAL MOVEMENT OF THE PLATES MIGHT OCCUR.

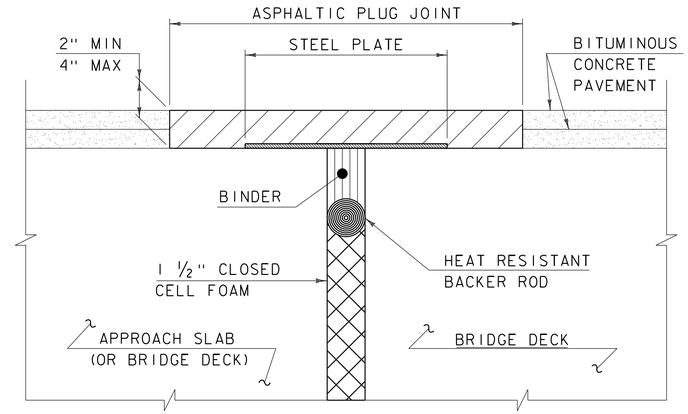

ASPHALTIC PLUG JOINT DETAIL "A" - NEW

NOTE:
PLACE 1/4" THICK BY 8" WIDE SECTIONS OF STEEL PLATE OVER THE CENTER OF THE MOVEMENT GAP. SECURE THE PLATES FROM MOVING BY INSERTING LOCATING PINS THROUGH THE PRE-STAMPED HOLES INTO BACKER ROD AND COVER WITH HOT BINDER.

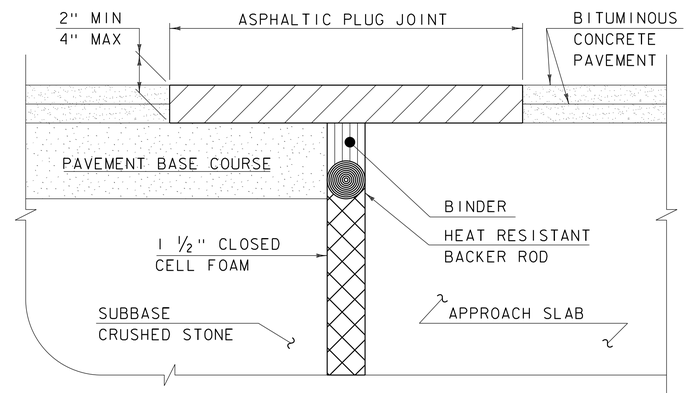

ASPHALTIC PLUG JOINT DETAIL "B" - NEW

ASPHALTIC PLUG JOINT NOTES

INSTALLATION:

1. LOCATE THE JOINT CENTRALLY OVER THE DECK OVERLAY EXPANSION GAP OR FIXED JOINT, MARKED OUT TO THE MANUFACTURER'S RECOMMENDED WIDTH.

2. REMOVE THE BITUMINOUS CONCRETE PAVEMENT FULL DEPTH AS SHOWN ON THE PLANS. THE PAVEMENT SHALL BE DRY AND SAW CUT TO THE LIMITS REQUIRED TO PLACE THE JOINT. A PNEUMATIC HAMMER AND CHISEL MAY BE USED ADJACENT TO THE CURB ONLY WHEN SAW CUTTING IS NOT POSSIBLE.

3. BLAST CLEAN THE JOINT AREA OF DEBRIS, ASPHALT AND SHEET MEMBRANE. THOROUGHLY DRY THE JOINT AREA WITH COMPRESSED AIR PRIOR TO APPLYING BINDER MATERIAL.

4. PLACE PROPERLY SIZED HEAT RESISTANT BACKER ROD IN THE MOVEMENT GAP ALLOWING FOR 1" +/- OF BINDER ABOVE THE ROD.

5. HEAT AND PLACE THE BINDER MATERIAL AS RECOMMENDED BY THE MANUFACTURER.

6. IMMEDIATELY AFTER TOP COATING, CAST AN ANTI-SKID MATERIAL OVER THE JOINT TO REDUCE THE RISK OF TRACKING.

WEATHER LIMITATIONS

APPLY BINDER MATERIAL ONLY WHEN THE FOLLOWING CONDITIONS PREVAIL OR AS RECOMMENDED BY THE MANUFACTURER:

1. THE AMBIENT AIR TEMPERATURE IS AT LEAST 10 DEG C (50 DEG F) AND RISING.

2. THE ROAD SURFACE IS DRY.

3. WEATHER CONDITIONS OR OTHER CONDITIONS ARE FAVORABLE AND ARE EXPECTED TO REMAIN SO FOR THE PERFORMANCE OF SATISFACTORY WORK.

DETAILS ON THIS SHEET ARE NOT TO SCALE.

REVISIONS	
MAY 7, 2010	APPROVED FOR USE BY VAOT STRUCTURES SECTION
AUGUST 29, 2011	ADD DETAIL "B" AND REV. NOTES

BRIDGE JOINT
ASPHALTIC PLUG

VERMONT AGENCY OF TRANSPORTATION
STRUCTURES - DIVISION

STRUCTURES DETAIL

SD-516.10