STATE OF VERMONT
AGENCY OF TRANSPORTATION

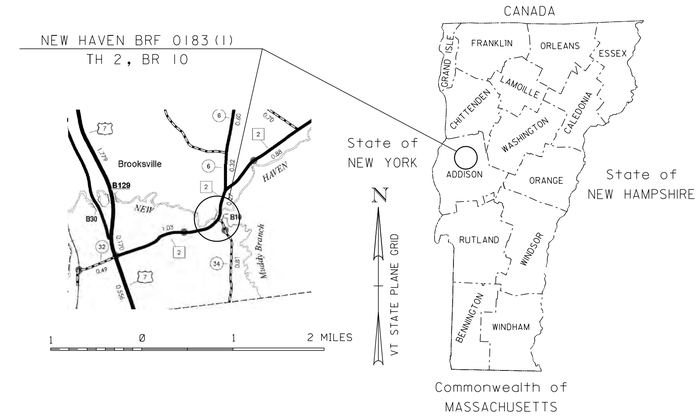

PROPOSED IMPROVEMENT
BRIDGE PROJECT
TOWN OF NEW HAVEN
COUNTY OF ADDISON
BRIDGE #10
TH 2 (CLASS 2 - MAJOR COLLECTOR)

PROJECT LOCATION: BEGINNING AT A POINT IN THE TOWN OF NEW HAVEN ON TOWN HIGHWAY 2 (RIVER ROAD) APPROXIMATELY 250 FEET WESTERLY OF THE INTERSECTION WITH TH-34 (HALPIN ROAD) AND PROCEEDING EASTERLY APPROXIMATELY 730 FEET ALONG TOWN HIGHWAY 2.

PROJECT DESCRIPTION: WORK TO BE PERFORMED UNDER THIS PROJECT INCLUDES CONSTRUCTION OF A NEW BRIDGE ON A REVISED ALIGNMENT INCLUDING RELATED CHANNEL AND APPROACH WORK FOR TOWN HIGHWAY 2 AND TOWN HIGHWAY 34.

LENGTH OF ROADWAY: 562.98 FEET
LENGTH OF STRUCTURE: 167.02 FEET
LENGTH OF PROJECT: 730 FEET

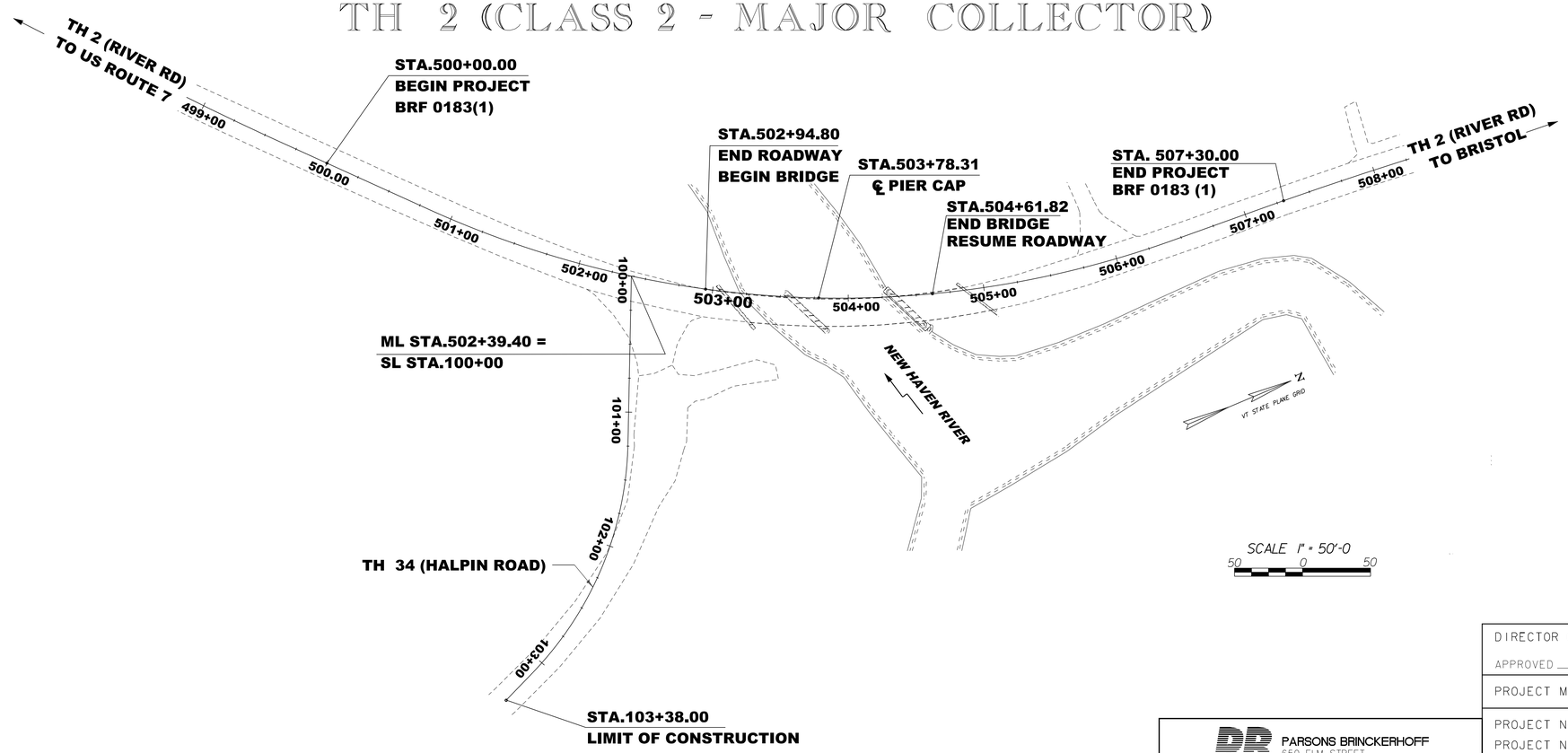

CONSTRUCTION IS TO BE CARRIED ON IN ACCORDANCE WITH THESE PLANS AND THE STANDARD SPECIFICATIONS FOR CONSTRUCTION DATED 2011, AS APPROVED BY THE FEDERAL HIGHWAY ADMINISTRATION ON JULY 20, 2011 FOR USE ON THIS PROJECT, INCLUDING ALL SUBSEQUENT REVISIONS AND SUCH REVISED SPECIFICATIONS AND SPECIAL PROVISIONS AS ARE INCORPORATED IN THESE PLANS.

QUALITY ASSURANCE PROGRAM : LEVEL 2

SURVEYED BY : VERMONT SURVEY & ENGINEERING, INC.
SURVEYED DATE : 11/2010

DATUM
VERTICAL NAVD 88 (GEOID 09) FT
HORIZONTAL NAD 83 (CORS) SPC (4400VT) sFT

PARSONS BRINCKERHOFF
650 ELM STREET
MANCHESTER, NH 03101

DIRECTOR OF PROJECT DELIVERY
APPROVED _____ DATE _____

PROJECT MANAGER : TODD SUMNER P.E.

PROJECT NAME : **NEW HAVEN**
PROJECT NUMBER : **BRF 0183 (1)**

SHEET 1 OF 66 SHEETS

STATE OF VERMONT
AGENCY OF TRANSPORTATION

PRELIMINARY INFORMATION SHEET (BRIDGE)

Version 12.01.01c

LRFD

INDEX OF SHEETS

PLAN SHEETS

1	TITLE SHEET
2	PRELIMINARY INFORMATION SHEET
3 - 4	GENERAL NOTES
5 - 7	PROJECT QUANTITY SHEETS
8	LEGEND SHEET
9-10	TYPICAL SECTIONS
11-12	SURVEY TIE SHEETS
13-14	LAYOUT SHEETS
15-17	PROFILE SHEETS
18-20	TRAFFIC CONTROL SHEETS
21	BORING LOCATION PLAN
22 - 25	BORING LOG SHEETS
26	PLAN AND ELEVATION SHEET
27	FRAMING PLAN
28	GIRDER DETAIL SHEET
29	CAMBER AND DEFLECTION DETAILS
30	DECK REINFORCING PLAN
31	CLOSURE POUR DETAILS
32	BEARING DETAILS
33	APPROACH SLAB DETAILS
34	ABUTMENT 1 PLAN
35	ABUTMENT 1 REINFORCING PLAN
36	ABUTMENT 2 PLAN
37	ABUTMENT 2 REINFORCING PLAN
38	WINGWALL DETAILS
39 - 40	PIER CAP DETAILS
41	DRILLED SHAFT AND COLUMN DETAILS
42	REINFORCEMENT SCHEDULE
43 - 49	MAINLINE CROSS SECTIONS
50 - 52	HALPIN ROAD CROSS SECTIONS
53	BANKING DIAGRAM & MATERIAL TRANSITION SHEET
54 - 56	CHANNEL CROSS SECTIONS
57	EPSC PLAN NARRATIVE
58 - 59	EPSC EXISTING CONDITIONS SITE PLAN
60 - 61	EPSC CONSTRUCTION CONDITIONS SITE PLAN
62 - 63	EPSC FINAL CONDITIONS SITE PLAN
64 - 66	EPSC DETAILS

STANDARDS LIST

B-5	SLOPE GRADING, EMBANKMENTS, MUCK	06-01-1994
B-71	STANDARD FOR RESIDENTIAL AND COMMERCIAL DRIVES	07-08-2005
D-4	VARIOUS DRAINAGE DETAILS	08-13-2007
T-10	CONVENTIONAL ROADS CONSTRUCTION APPROACH SIGNING	08-06-2012
T-28	CONSTRUCTION SIGN DETAILS	08-06-2012
T-30	CONSTRUCTION SIGN DETAILS	08-06-2012
T-45	SQUARE TUBE SIGN POST AND ANCHOR	01-02-2013
T-17	TRAFFIC CONTROL MISCELLANEOUS DETAILS	08-06-2012
E-127	ROUTE MARKINGS AT RURAL INTERSECTIONS	08-08-1995
T-42	BRIDGE NUMBER PLAQUE	04-09-2014
E-195	SHARED USE PATH PAVEMENT MARKINGS AND SIGN DETAILS	06-09-2008
G-1	STEEL BEAM GUARDRAIL DETAILS (POST, DELINEATOR, TYPICALS)	01-03-2000
G-1D	STEEL BEAM GUARDRAIL DETAILS (END TERMINAL, ANCHOR, MEDIAN)	01-03-2000
G-19	GENERIC GRADING PLANS FOR GUARDRAIL END TERMINALS	11-15-2002
S-360a	BRIDGE RAILING, GALVANIZED NETC 2 RAIL	12-14-2009
S-360b	GUARDRAIL APPROACH SECTION, GALVANIZED NETC 2 RAIL	12-14-2009

STRUCTURES DETAILS

SD-501.00	CONCRETE DETAILS AND NOTES	04-22-2010
SD-502.00	CONCRETE DETAILS AND NOTES	04-22-2010
SD-516.10	BRIDGE JOINT ASPHALTIC PLUG DETAIL SHEET	04-22-2010
SD-601.00	STRUCTURAL STEEL DETAILS & NOTES	04-22-2010
SD-602.00	STRUCTURAL STEEL PLATE GIRDER DETAILS & NOTES	04-22-2010

AS BUILT "REBAR" DETAILS

LEVEL I	LEVEL II	LEVEL III
TYPE:	TYPE:	TYPE:
GRADE:	GRADE:	GRADE:

TRAFFIC DATA

YEAR	ADT	DHV	% D	% T	ADTT
2014	1600	180	61	5.8	120
2034	1700	190	61	8.4	180

20 year ESAL for flexible pavement from 2014 to 2034 : 491000
40 year ESAL for flexible pavement from 2014 to 2054 : 1122000
Design Speed : 40 mph

FINAL HYDRAULIC REPORT

HYDROLOGIC DATA

Date: 11/01/2013

DRAINAGE AREA : 114 sq mi
CHARACTER OF TERRAIN : wooded, mountainous, rural
STREAM CHARACTERISTICS : semi-alluvial, straight, not braided or anabranched
NATURE OF STREAMBED : mostly cobbles

PEAK FLOW DATA

Q 2.33 =	3,370 cfs	Q 50 =	13,070 cfs
Q 10 =	8,450 cfs	Q 100 =	15,360 cfs
Q 25 =	11,230 cfs	Q 500 =	21,590 cfs

DATE OF FLOOD OF RECORD: unknown
ESTIMATED DISCHARGE: unknown
WATER SURFACE ELEV.: unknown
NATURAL STREAM VELOCITY : @ Q50 = 6.2 fps
ICE CONDITIONS : light to moderate
DEBRIS: moderate
DOES THE STREAM REACH MAXIMUM HIGHWATER ELEV. RAPIDLY? no
IS ORDINARY RISE RAPID? no
IS STAGE AFFECTED BY UPSTREAM OR DOWNSTREAM CONDITIONS? no
IF YES, DESCRIBE:

WATERSHED STORAGE: <1%
HEADWATERS:
UNIFORM: X
IMMEDIATELY ABOVE SITE:

EXISTING STRUCTURE INFORMATION

STRUCTURE TYPE: 3 simple spans - straight beam/curve deck
YEAR BUILT: 1934
CLEAR SPAN(NORMAL TO STREAM): 110.0 ft
VERTICAL CLEARANCE ABOVE STREAMBED: 10.2 ft
WATERWAY OF FULL OPENING: 773.5 sf
DISPOSITION OF STRUCTURE: Remove and replace
TYPE OF MATERIAL UNDER SUBSTRUCTURE: gravel

WATER SURFACE ELEVATIONS AT:

Q2.33 =	258.0	VELOCITY =	7.2 fps
Q10 =	261.6	"	9.1 fps
Q25 =	263.6	"	9.4 fps
Q50 =	264.3	"	9.5 fps
Q100 =	265.0	"	9.4 fps

LONG TERM STREAMBED CHANGES: none noted
immediate vicinity of the abutments.

IS THE ROADWAY OVERTOPPED BELOW Q100: yes
FREQUENCY: Q3.2
RELIEF ELEVATION: 259.0
DISCHARGE OVER ROAD @Q100: 7,910 cfs

UPSTREAM STRUCTURE

TOWN:	New Haven	DISTANCE:	19,060 ft
HIGHWAY # :	Town Highway 4	STRUCTURE #:	11
CLEAR SPAN:	100 ft	CLEAR HEIGHT:	24.2 ft
YEAR BUILT:	1969	FULL WATERWAY:	unknown
STRUCTURE TYPE:	Prestressed Concrete T Beam		

DOWNSTREAM STRUCTURE

TOWN:	New Haven	DISTANCE:	7,060 ft
HIGHWAY # :	US Route 7	STRUCTURE #:	##
CLEAR SPAN:	253 ft	CLEAR HEIGHT:	21 ft
YEAR BUILT:	1960	FULL WATERWAY:	unkown
STRUCTURE TYPE:	3 Span Rolled Beam		

LRFR LOAD RATING FACTORS

LOADING LEVELS	TRUCK								
	H-20	HL-93	3S2		6 AXLE	3A. STR.	4A.		5A. SEMI
TONNAGE	20	36	36		66	30	34.		38
INVENTORY									
POSTING									
OPERATING									
COMMENTS:									

PROPOSED STRUCTURE

STRUCTURE TYPE: 2 span curved steel girder

CLEAR SPAN(NORMAL TO STREAM): 86.1 ft
VERTICAL CLEARANCE ABOVE STREAMBED: 10.2 ft
WATERWAY OF FULL OPENING: 821.0 sf

WATER SURFACE ELEVATIONS AT:

Q2.33 =	257.9	VELOCITY=	7.2 fps
Q10 =	261.9	"	9.0 fps
Q25 =	263.3	"	9.5 fps
Q50 =	264.1	"	9.8 fps
Q100 =	264.9	"	10.1 fps

IS THE ROADWAY OVERTOPPED BELOW Q100: yes
FREQUENCY: Q3.2
RELIEF ELEVATION: 259.0
DISCHARGE OVER ROAD @Q100: 7,250 cfs

AVERAGE LOW ELEVATION OF SUPERSTRUCTURE: 260.6
VERTICAL CLEARANCE: -3.5 ft.

SCOUR: 3.5' Contraction & 15.0' Pier Scour @ Q100

REQUIRED CHANNEL PROTECTION: Type IV Stone Fill

PERMIT INFORMATION

AVERAGE DAILY FLOW:	200 cfs	DEPTH OR ELEVATION:
ORDINARY LOW WATER:	15 cfs	250.0
ORDINARY HIGH WATER:	2030 cfs	256.5

TEMPORARY BRIDGE REQUIREMENTS

STRUCTURE TYPE: no temporary bridge is needed
CLEAR SPAN (NORMAL TO STREAM): n/a
VERTICAL CLEARANCE ABOVE STREAMBED: n/a
WATERWAY AREA OF FULL OPENING: n/a

ADDITIONAL INFORMATION

TRAFFIC MAINTENANCE NOTES

1. MAINTAIN ONE-WAY TRAFFIC ON THE EXISTING STRUCTURE.
2. INSTALL AND MAINTAIN TRAFFIC SIGNALS.
3. SIDEWALKS ARE NOT NECESSARY

DESIGN VALUES

1.	DESIGN LIVE LOAD		HL-93
2.	FUTURE PAVEMENT	d_p:	3.0 INCH
3.	ABUTMENT BEARING TO BEARING LENGTH (TWO SPANS) (82.00 - 82.00) FT	L:	164.00 FT
4.	MIN. MID-SPAN POS. CAMBER @ RELEASE (PRESTRESSED UNITS)	Δ:	- - -
5.	PRESTRESSING STRAND (0.60 INCH DIAMETER - LOW RELAX)	f_y:	270 KSI
6.	PRESTRESSED CONCRETE STRENGTH	f'_c:	6.0 KSI
7.	PRESTRESSED CONCRETE RELEASE STRENGTH	f'_{ci}:	5.0 KSI
8.	CONCRETE, HIGH PERFORMANCE CLASS AA	f'_c:	4.0 KSI
9.	CONCRETE, HIGH PERFORMANCE CLASS A	f'_c:	4.0 KSI
10.	CONCRETE, HIGH PERFORMANCE CLASS B	f'_c:	3.5 KSI
11.	CONCRETE, CLASS C	f'_c:	3.0 KSI
12.	REINFORCING STEEL	f_y:	60 KSI
13.	STRUCTURAL STEEL AASHTO M270	f_y:	50 & 70 KSI
14.	SOIL UNIT WEIGHT	γ:	0.140 KCF
15.	NOMINAL BEARING RESISTANCE OF SOIL	q_n:	- - -
16.	SOIL BEARING RESISTANCE FACTOR (REFER TO AASHTO LRFD)	ϕ:	- - -
17.	NOMINAL BEARING RESISTANCE OF ROCK	q_n:	70.0 KSF
18.	ROCK BEARING RESISTANCE FACTOR (REFER TO AASHTO LRFD)	ϕ:	0.45
19.	NOMINAL AXIAL PILE RESISTANCE	q_p:	500 KIP
20.	PILE YIELD STRENGTH ASTM A572	f_y:	50 KSI
21.	PILE SIZE		HP 14 X 102
22.	EST. PILE LENGTH	L_p:	78 FT
23.	PILE RESISTANCE FACTOR	ϕ:	- - -
24.	LATERAL PILE DEFLECTION	Δ:	1.2 IN
25.	BASIC WIND SPEED	V_{3s}:	- - -
26.	MINIMUM GROUND SNOW LOAD	p_g:	- - -
27.	SEISMIC DATA PGA: 9%	S_s:	0.19
		S_1:	0.052

PROJECT NAME: **NEW HAVEN**

PROJECT NUMBER: **BRF 0183(1)**

FILE NAME:	z10j070pi.xls	PLOT DATE:	13-MARCH-2015
PROJECT LEADER:	K. DONINGTON	DRAWN BY:	S.BROWN
DESIGNED BY:	S.BROWN	CHECKED BY:	A.STOCKIN
PRELIMINARY INFORMATION SHEET 1		SHEET 2	OF 66

GENERAL NOTES:

1. ALL MATERIALS AND CONSTRUCTION SHALL CONFORM TO THE STATE OF VERMONT AGENCY OF TRANSPORTATION 2011 STANDARD SPECIFICATIONS FOR CONSTRUCTION, THE 2012 AASHTO LRFD BRIDGE DESIGN SPECIFICATIONS AND THEIR LATEST REVISIONS.
2. THE BRIDGE IS DESIGNED FOR HL-93 LIVE LOAD.
3. ITEM 529.15 "REMOVAL OF STRUCTURE" SHALL BE USED FOR THE REMOVAL OF THE EXISTING STRUCTURE (SUPERSTRUCTURE, ABUTMENTS AND PIER) AND ANY PORTION OF THE ABUTMENTS OUTSIDE THE LIMITS OF STRUCTURE EXCAVATION OR UNCLASSIFIED CHANNEL EXCAVATION.
4. ALL DIMENSIONS SHOWN IN THE PLANS ARE HORIZONTAL OR VERTICAL AND ARE GIVEN AT 68 DEGREES FAHRENHEIT, UNLESS NOTED OTHERWISE.
5. SEE THE PROJECT SPECIAL PROVISIONS FOR THE PROJECT SCHEDULE AND ALLOWABLE CLOSURE PERIOD.
6. ALL CORNERS OF CONCRETE SHALL BE CHAMFERED ¾" UNLESS NOTED OTHERWISE.
7. NO SUBSTITUTION FOR PRECAST CONCRETE WILL BE PERMITTED.
8. CONTRACTOR SHALL NOT BE RESPONSIBLE FOR MODIFICATIONS TO EXISTING UTILITIES, INCLUDING UTILITY POLES AND AERIAL ELECTRIC. SPECIFIED MODIFICATIONS SHALL BE THE RESONSIBILITY OF THE UTILITY COMPANY. CONTRACTOR SHALL COORDINATE WITH UTILITY COMPANY TO IMPLEMENT ALL MODIFICATIONS.

EARTHWORK AND RELATED ITEMS:

9. THE "STONE FILL, TYPE IV" UNDER THE BRIDGE AS SHOWN IN THE PLANS SHALL BE PLACED BEFORE THE NEW STEEL GIRDERS ARE SET.
10. TEMPORARY CONSTRUCTION FILLS WITHIN THE WATERCOURSE FOR ANY PURPOSE SHALL CONSIST OF CLEAN STONE FILL ONLY. NO OTHER FILLING IN THE STREAM SHALL OCCUR WITHOUT THE APPROVAL OF THE STREAM ALTERATION ENGINEER.

H PILES:

11. THE PILES SHALL BE HP 14 X 102 IN CONFORMANCE WITH AASHTO M 572 GRADE 50.
12. TO PREVENT DAMAGE TO THE PILES, PILE SHOES ARE REQUIRED FOR DRIVEN PILES AND SHALL CONFORM TO SUBSECTION 505.04(F).
13. FOR ESTIMATING PURPOSES THE PILE TIP ELEVATIONS WERE ASSUMED AS SHOWN ON THE BORING LOGS. THE ACTUAL IN PLACE LENGTHS MAY VARY.
14. TO ENSURE THAT THE NOMINAL CAPACITY HAS BEEN ATTAINED AND TO PREVENT THE OVERSTRESSING OF THE PILES DURING DRIVING OPERATIONS, DYNAMIC TESTING SHALL BE PERFORMED A MINIMUM OF ONE AT EACH ABUTMENT AND SHALL BE PAID UNDER ITEM 505.45, "DYNAMIC PILE LOADING TEST".
15. THE TOPS OF THE PILES AFTER DRIVING OR PLACEMENT SHALL NOT VARY FROM THE POSITION SHOWN ON THE PLANS BY MORE THAN 3 INCHES. THE PILE ORIENTATION SHALL NOT VARY BY MORE THAN 5 DEGREES. THE CONTRACTOR SHALL DEMONSTRATE HOW THE TOLERANCES WILL BE MET TO THE SATISFACTION OF THE ENGINEER. THESE MEASURES SHALL BE DEMONSTRATED IN A SUBMITTAL TO BE ACCEPTED BEFORE PILE DRIVING COMMENCES.
16. THE PILES SHALL BE DRIVEN TO A NOMINAL AXIAL PILE DRIVING RESISTANCE (RNDR) OF 500 KIPS OR REFUSAL, PROVIDED A MINIMUM PENETRATION OF 78 FEET BELOW THE BOTTOM OF PILE CAP HAS BEEN ACHIEVED.

STRUCTURAL STEEL:

17. THE EXISTING STRUCTURAL STEEL IS PAINTED WITH MATERIAL THAT MAY CONTAIN LEAD. THE CONTRACTOR SHALL FOLLOW ALL APPLICABLE REGULATIONS WHEN HANDLING AND WORKING WITH THIS STEEL. THE REMOVED STRUCTURAL STEEL IS THE PROPERTY OF THE CONTRACTOR. THE CONTRACTOR SHALL INDEMNIFY AND HOLD THE STATE, ITS OFFICERS, AND EMPLOYEES HARMLESS CONCERNING THE CONTRACTOR'S USE OR DISPOSITION OF THE REMOVED EXISTING STRUCTURAL STEEL.
18. ALL STEEL SHALL BE METALIZED IN ACCORDANCE WITH ITEM 900.670, "SPECIAL PROVISION – METALIZING OF STRUCTURAL STEEL".
19. ANY CONNECTIONS THAT ARE NOT DETAILED ON THE PLANS SHALL BE DETAILED BY THE FABRICATOR AND SUBMITTED TO THE STRUCTURES ENGINEER FOR APPROVAL.
20. ALL HOLES IN THE WEBS OF THE GIRDERS THAT ARE NOT OTHERWISE FILLED, SHALL BE FILLED WITH EITHER BUTTON HEAD OR HEX HEAD BOLTS. THESE BOLTS SHALL BE TIGHTENED IN ACCORDANCE WITH SUBSECTION 506.19.
21. ALL WELDING SHALL CONFORM TO PROVISIONS OF SUBSECTION 506.10.
22. ALL FIELD CONNECTIONS SHALL BE MADE WITH AASHTO M164 – ASTM A 325 BOLTS - 7/8" DIAMETER HIGH-STRENGTH BOLTS IN 15/16" DIAMETER HOLES, PER SECTION 506. A325 BOLTS WILL BE HOT DIPPED GALVANIZED PER SECTION 714.05.
23. ALL STRUCTURAL STEEL SHALL MEET ALL REQUIREMENTS OF AASHTO M270 GRADE 50 KSI.
24. THIS PROJECT INVOLVES THE GIRDERS (AND DIAPHRAGMS) BEING FULLY ERECTED IN THREE SEPARATE LOCATIONS:
    1) AT STEEL FABRICATOR: COMPLETE ERECTION IS REQUIRED FOR MATCH DRILLING OF THE SPLICE PLATES.
    2) AT PRECASTORS: THE COMPLETE UNIT AT THE PRECASTERS PRIOR TO CASTING THE INTEGRAL PIER CAP.
    3) AT THE BRIDGE SITE.
25. AFTER THE GIRDERS HAVE BEEN ERECTED AT THE BRIDGE SITE, ELEVATIONS SHALL BE TAKEN ALONG THE TOP OF THE GIRDERS AS DIRECTED BY THE RESIDENT ENGINEER FOR USE IN DETERMINING FINISHED GRADES OF THE DECK.
26. GIRDER WEBS AND CROSS FRAMES SHALL BE PLUMB IN FINAL CONDITION.
27. STRUCTURAL STEEL MEMBERS DESIGNATED "CVN" IN THE PLANS SHALL BE "CHARPY V NOTCH" TESTED IN ACCORDANCE W/SUBSECTION 714.01.

CONCRETE:

28. WATER REPELLENT, SILANE, SHALL BE APPLIED TO ALL EXPOSED CONCRETE (CAST-IN-PLACE AND PRECAST) SURFACES, EXCEPT THE UNDERSIDE OF THE DECK BETWEEN DRIP NOTCHES. PAYMENT FOR SILANE WILL BE INCLUDED IN THE UNIT BID PRICE FOR THE APPROPRIATE PRECAST ITEM. FOR SILANE APPLIED TO THE CAST-IN-PLACE CONCRETE DECK, PAYMENT SHALL BE MADE UNDER ITEM 514.10.
29. ALL REINFORCING STEEL SHALL BE DETAILED AND FABRICATED USING PROCEDURES AND TOLERANCES IN ACCORDANCE WITH APPLICABLE PUBLICATIONS OF THE "CONCRETE REINFORCING STEEL INSTITUTE".
30. ALL REINFORCING STEEL SHALL MEET THE REQUIREMENTS OF ITEM 507.12, "REINFORCING STEEL, LEVEL II", EXCEPT FOR THE REINFORCING STEEL IN THE DRILLED SHAFTS WHICH SHALL MEET THE REQUIREMENTS OF ITEM 507.11, "REINFORCING STEEL, LEVEL 1" AND PAID IN ITEM 900.640, "SPECIAL PROVISION,(DRILLED SHAFT IN EARTH)".
31. CONCRETE USED FOR THE APPROACH SLAB CLOSURE POUR SHALL BE ITEM 900.608,"SPECIAL PROVISION (HIGH PERFORMANCE CONCRETE, RAPID SET)". ALL PRECAST SUBSTRUCTURE AND APPROACH SLAB CONCRETE SHALL MEET THE REQUIREMENTS OF SECTION 540 – PRECAST CONCRETE.
32. FLEMING BRACKETS OR SIMILAR FALSEWORK SHALL BE SPACED AS REQUIRED BY DESIGN, BUT SHALL BE LIMITED TO A MAXIMUM OF 4 FEET. THE DESIGN OF THE FALSWORK SHALL BE THE RESPONSIBILITY OF THE CONTRACTOR. STAY-IN-PLACE FORMS SHALL NOT BE USED.

PRECAST ABUTMENTS AND POST-TENSIONING:

33. THE UNIT PRICE FOR EACH PRECAST ABUTMENT SHALL INCLUDE THE ASSOCIATED PRECAST WINGWALLS AND ALL LABOR AND MATERIALS TO CONNECT WINGWALLS. THIS WORK SHALL BE PAID FOR UNDER ITEM 540.10, "PRECAST CONCRETE STRUCTURE (ABUTMENT 1)" AND/OR "PRECAST CONCRETE STRUCTURE (ABUTMENT 2)" AS APPROPRIATE.
34. ALL MECHANICAL CONNECTORS SHALL BE GROUTED SPLICE COUPLERS UNLESS OTHERWISE NOTED AND SHALL BE CAPABLE OF ATTAINING 125% OF THE SPECIFIED YIELD STRENGTH OF THE REINFORCING BAR BEING SPLICED.
35. FOR PRECAST UNITS THE COST OF REINFORCING STEEL AND GROUTED SPLICERS SHALL BE INCLUDED IN ITEM 540.10, "PRECAST CONCRETE STRUCTURE (ABUTMENT 1)" AND/OR "PRECAST CONCRETE STRUCTURE (ABUTMENT 2)" AS APPROPRIATE.
36. IF VERTICAL CONSTRUCTION JOINTS ARE REQUIRED BY THE CONTRACTOR FOR SHIPMENT OF THE ABUTMENTS AND/OR WINGWALLS, THEN THE SECTIONS SHALL BE KEYED AND MATCH CAST. A JOINT DETAIL SHALL BE SHOWN ON THE FABRICATION DRAWINGS.
37. CONTRACTOR/FABRICATOR SHALL SHOP VERIFY PROPER FIT OF ALL BRIDGE SUBSTRUCTURE ELEMENTS TO BE CONNECTED.
38. POST-TENSIONING AND ASSOCIATED ITEMS ARE ONLY REQUIRED IF THE PILE CAP IS CONSTRUCTED IN MORE THAN ONE UNIT. ANY POST-TENSIONING STRANDS AND CONDUIT SHALL ADHERE TO THE REQUIREMENTS OF SECTION 510-PRESTRESSED CONCRETE. GALVANIZED ANCHOR ASSEMBLIES, CONDUIT AND POST-TENSIONING STRANDS SHALL BE INCLUDED UNDER ITEM 540.10, "PRECAST CONCRETE STRUCTURE ABUTMENT #1)" AND /OR "PRECAST CONCRETE STRUCTURE (ABUTMENT #2)" AS APPROPRIATE. POST-TENSIONING STRANDS SHALL BE COVERED WITH A SEAMLESS POLYPROPYLENE SHEATH (WITH CORROSION INHIBITOR GREASE BETWEEN SHEATH AND STRAND) FOR THE LENGTH OF THE STRAND, EXCEPT AT ANCHORAGE LOCATIONS.
39. GALVANIZE POST-TENSIONING ANCHOR ASSEMBLIES AFTER FABRICATION ACCORDING TO AASHTO M232M/M232.
40. THE CONCRETE FOR THE ABUTMENT #1 AND ABUTMENT #2 PILE CAVITIES SHALL MEET THE REQUIREMENTS OF ITEM 900.608 "SPECIAL PROVISION (HIGH PERFORMANCE CONCRETE, RAPID SET)".
41. THE CORRUGATED STEEL PIPE SHALL BE TYPE I AND SHALL MEET THE REQUIREMENTS OF SUBSECTION 711.01 AND AASHTO M218. ALL COSTS ASSOCIATED WITH PLACING THE CORRUGATED STEEL PIPE SHALL BE INCLUDED IN THE BID PRICE FOR ITEM 540.10, "PRECAST CONCRETE STRUCTURE ABUTMENT #1)" AND "PRECAST CONCRETE STRUCTURE (ABUTMENT #2)".
42. DESIGN VALUES
    a. CONCRETE COMPRESSIVE STRENGTH: f'c = 5000 PSI
    b. POST-TENSIONING STRANDS: 0.5 INCH DIAMETER, 270 KSI, LOW RELAXATION 7-WIRE STRANDS
    c. ASSUMED MODULUS OF ELASTICITY: 28,500 KSI
    d. THERE SHALL BE TWO STRANDS PER CONDUIT
    e. THE JACKING FORCE PER STRAND: 32 KIPS

PRECAST INTEGRAL CONCRETE PIER CAP:

43. THE DOWEL SLEEVES AND GROUT PAD CONNECTING THE PRECAST CAP BEAM TO THE CAST-IN-PLACE COLUMN SHALL CONSIST OF PREBAGGED, NON-SHRINK GROUT, PAID UNDER ITEM 900.645, "SPECIAL PROVISION (INTEGRAL PIER CAP)".
44. GROUT FORMS SHALL BE VENTED EVERY 1 FOOT TO ALLOW FOR THE ESCAPE OF AIR TO PREVENT VOIDS.

45. PLACE BUNDLED BARS WITH CENTRALIZERS. TREMIE FILL TUBES 1 AT A TIME TO ENSURE ENTRAPMENT OF AIR DOES NOT OCCUR. THE CONTRACTOR SHALL SUBMIT A PLACEMENT PROCEDURE THAT DETAILS THE MATERIALS TO BE USED, THE FORMS TO BE USED, AND THE METHODS TO BE EMPLOYED.
46. THE UNIT PRICE FOR THE PRECAST PIER CAP SHALL INCLUDE ALL LABOR AND MATERIALS TO ASSEMBLE STEEL AT THE PRECAST YARD AND CAST CONCRETE CAP. THIS WORK SHALL BE PAID FOR UNDER ITEM 900.645, “SPECIAL PROVISION (INTEGRAL PIER CAP)”.
47. THE CONTRACTOR SHALL BE SOLELY RESPONSIBLE FOR INSURING THE GEOMETRY OF THE BRIDGE IS ERECTED PRECISELY AT ALL STAGES OF THE WORK. (STEEL FABRICATION, PRECAST, BRIDGE SITE).AT THE EARLIEST PART OF THE SHOP DRAWING PHASE, THE CONTRACTOR SHALL SUBMIT TO THE ENGINEER A DETAILED, STEP BY STEP NETWORK SCHEDULE AND WORK PLAN DESCRIBING ALL ASPECTS TO THE PRECISE INSTALLATION OF THE COORDINATED CONSTRUCTION OF THE SUPERSTRUCTURE WITH RESPECT TO THE PRECAST INTEGRAL PIER CAP AND THE INTEGRAL ABUTMENTS.
48. VT REGISTERED SURVEYORS MUST BE EMPLOYED BY THE CONTRACTOR TO INDEPENDENTLY CHECK AT ALL STAGES OF THE WORK THE ACCURACY OF THE STRUCTURAL STEEL AND THE PRECAST CAP BEAM, AND THE SUBSTRUCTURE ELEMENTS ARE ALL CONSTRUCTED WITHIN THE TOLERANCES GIVEN IN THE SPECIFICATIONS BEFORE ACCEPTANCE AND ANY PLACEMENT OF ANY CONCRETE AT THE PRECAST FABRICATORS OR IN THE FIELD AT CLOSURE POURS AT THE CENTER PIER AND ABUTMENTS.

PROPOSED SEQUENCE OF CONSTRUCTION:

49. INSTALL EROSION CONTROL MEASURES.
50. COMMENCE WITH CLEARING AND GRUBBING.
51. CLOSE BRIDGE AND REMOVE EXISTING STRUCTURE.
52. CONSTRUCT ACCESS ROAD AND TEMPORARY WORK PLATFORMS.
53. INSTALL DRILLED SHAFT AND COLUMN.
54. CONCURRENTLY, FABRICATE ALL STEEL SUPERSTRUCTURE COMPONENTS AT STEEL FABRICATORS SHOP, ERECT STEEL BEAMS AND ALL DIAPHRAGMS ON TEMPORARY BLOCKING AND MATCH DRILL THE GIRDER SPLICE PLATES.
55. REASSEMBLE THE COMPLETE 2 SPAN SUPERSTRUCTURE UNIT ON TEMPORARY BLOCKING AT AN APPROVED PRECAST FACILITY. INSTALL REBAR AND REMOVABLE FORMS FOR THE PRECAST INTEGRAL CAP BEAM.
56. PLACE AND CURE THE CONCRETE, AND STRIP FORMS WHEN THE CONCRETE CAP BEAM HAS ACHIEVED A STRENGTH OF 5000 PSI.
57. DISASSEMBLE GIRDER AND DIAPHRAGM SPLICES.
58. SHIP PRECAST BEAMS TO THE JOB SITE WITH THE STEEL STUB OUTS. SHIP REMAINING STEEL GIRDERS AND DIAPHRAGMS.
59. ERECT PRECAST CONCRETE PIER CAP BEAM ON TOP OF PIER COLUMN USING TEMPORARY ADJUSTABLE SHORING THAT IS SUPPORTED FROM THE TOP OF THE DRILLED SHAFT AND STABILIZED BY THE COLUMN.
60. ADJUST THE PRECAST CAP BEAM TO THE PRECISE GEOMETRY AND CARRYOUT INDEPENDENT SURVEY CHECKS.
61. INSTALL THE DOWELS IN THE CORRUGATED METAL PIPE SLEEVES PROVIDED IN THE PIER COLUMN AND CAP BEAM. THE SLEEVE LAYOUTS MUST BE ACCURATELY LOCATED BY RIGID STEEL TEMPLATES THAT ARE COORDINATED BETWEEN THE PRECAST FABRICATOR AND THE COLUMN CONCRETE PLACEMENTS.
62. FORM AROUND THE TOP OF THE COLUMN AND UNDERSIDE OF CAP BEAM. INSTALL STEEL REBAR HOOPS, DOWEL BARS AND POUR CLOSURE REGION AS SPECIFIED.
63. ONCE THE GROUT HAS REACHED A STRENGTH OF 5000 PSI, THE TEMPORARY SHORING OF THE CAP BEAM IS TO BE REMOVED.
64. DURING PIER CONSTRUCTION OPERATIONS, INSTALL ABUTMENT PILES AND PRECAST ABUTMENT UNITS.
65. UPON COMPLETION OF ABUTMENT AND PIER COMPONENTS, INSTALL GIRDERS AND DIAPHRAGMS. THE ENVIRONMENTAL PERMIT FOR THE TEMPORARY CAUSEWAY IS FOR A 3.5 MONTH PERIOD. THE TEMPORARY ROCK FILL IN THE RIVER MUST BE REMOVED AFTER THIS PERIOD. THEREFORE, THE CONTRACTOR SHOULD ASSUME THE SUPERSTRUCTURE WILL NEED TO BE ERECTED BY CRANES LOCATED ON THE RIVER BANKS AND NOT FROM THE CAUSEWAY.
66. INSTALL DECK FORMING SYSTEM, DECK REBAR AND RAILS FOR THE BIDWELL SCREED.
67. USING RETARDER IN THE MIX AND SUFFICIENT EQUIPMENT AND FIELD LABOR, PLACE THE DECK IN ONE CONTINUOUS PLACEMENT PROCESS FROM END TO END; EXCEPT FOR THE CLOSURE POUR SECTIONS AT THE ABUTMENTS THAT SHALL BE PLACED AT LEAST 72 HOURS AFTER THE DECK POUR HAS BEEN COMPLETED.
68. THE PROPOSED SEQUENCE OF CONSTRUCTION IS A CONCEPT LEVEL ONLY. CONTRACTOR SHALL SUBMIT A DETAILED STEP BY STEP PROCEDURE OUTLINING THE PROPOSED DETAILED SEQUENCE OF ERECTION FOR APPROVAL BY THE ENGINEER PRIOR TO CONSTRUCTION.
69. AN ALTERNATE SEQUENCE OF CONSTRUCTION MAY BE SUBMITTED BY THE CONTRACTOR FOR APPROVAL BY THE ENGINEER.

SIGN INSTALLATION NOTES:

70. THE CONTRACTOR SHALL BE RESPONSIBLE FOR REPAIRING ANY DAMAGE TO PRIVATE OR PUBLIC PROPERTY CAUSED BY THE CONTRACTOR, AT THE CONTRACTOR’S EXPENSE.
71. ALL SIGNS WITHIN THE PROJECT LIMITS ARE TO BE REPLACED UNLESS OTHERWISE NOTED OR AS DIRECTED BY THE ENGINEER. SIGN LOCATIONS AS SHOWN ON THE PLANS ARE APPROXIMATE. EXACT LOCATIONS TO BE DETERMINED IN THE FIELD.
72. ALL SIGN PLACEMENT SHALL BE IN CONFORMANCE WITH VAOT STANDARD E-121 STANDARD SIGN PLACEMENT CONVENTIONAL ROADS, UNLESS OTHERWISE NOTED.
73. ALL SIGNS, FRAMES, MOUNTING HARDWARE, POSTS, AND ANCHORS FOR ANY SIGN ASSEMBLY SHALL BE REPLACED AT THE SAME TIME. MIXING OF OLD AND NEW SIGNS ON THE SAME ASSEMBLY WILL NOT BE ALLOWED EXCEPT AS NOTED ON THE PLANS.
74. NEW SIGNS WITH THEIR GREATER NIGHT TIME RETROREFLECTIVITY CAN OBSCURE OLDER SIGNS MOUNTED ADJACENT TO THEM. TO AVOID CONFUSION OF ROAD USERS, WORK SHALL BE COORDINATED SUCH THAT ALL SIGNS ASSOCIATED WITH A CURVE, INTERSECTION, OR SPEED CHANGE, SHALL BE REPLACED ON THE SAME DAY AND NOT LEFT INCOMPLETE NOR WITH A MIXTURE OF OLD AND NEW SIGNS WITHIN A GROUP OF ASSOCIATED SIGNS.

CONCRETE:		REINFORCING STEEL:	
STRUCTURAL ELEMENT	CONTRACT PAY ITEM	SHALL MEET THE REQUIREMENTS OF:	PAYMENT TO BE INCLUDED IN:
CAST-IN-PLACE CONCRETE DECK, BEAM-END CLOSURE POURS, AND CURBS (F'C = 4000 PSI)	ITEM 501.33, "CONCRETE, HIGH PERFORMANCE CLASS A"	REINFORCING STEEL, LEVEL II	ITEM 507.12, "REINFORCING STEEL, LEVEL II"
* CAST-IN-PLACE CONCRETE CLOSURE POURS (F'C = 5000 PSI)	ITEM 900.608, "SPECIAL PROVISION (HIGH PERFORMANCE CONCRETE, RAPID SET) (FPQ)"	REINFORCING STEEL, LEVEL II	ITEM 507.12, "REINFORCING STEEL, LEVEL II"
PRECAST ABUTMENT PILECAPS (F'C = 5000 PSI)	ITEM 540.10, "PRECAST CONCRETE STRUCTURE (ABUTMENT #1)" OR "PRECAST CONCRETE STRUCTURE (ABUTMENT #2)"	REINFORCING STEEL, LEVEL II	ITEM 540.10, "PRECAST CONCRETE STRUCTURE (ABUTMENT #1)" OR "PRECAST CONCRETE STRUCTURE (ABUTMENT #2)"
PRECAST PIER CAP (F'C = 4000 PSI)	ITEM 900.645 "SPECIAL PROVISION PRECAST INTEGRAL PIER CAP"	REINFORCING STEEL, LEVEL II	ITEM 900.645 "SPECIAL PROVISION PRECAST INTEGRAL PIER CAP"
CAST-IN-PLACE DRILLED SHAFT (F'C = 4000 PSI)	ITEM 900.645 "SPECIAL PROVISION (DRILLED SHAFT IN EARTH)"	REINFORCING STEEL, LEVEL I	ITEM 900.645 "SPECIAL PROVISION (DRILLED SHAFT IN EARTH)"
PRECAST APPROACH SLABS (F'C = 5000 PSI)	ITEM 540.10, "PRECAST CONCRETE STRUCTURE (APPROACH SLAB #1)" OR "PRECAST CONCRETE STRUCTURE (APPROACH SLAB #2)"	REINFORCING STEEL, LEVEL II	ITEM 540.10, "PRECAST CONCRETE STRUCTURE (APPROACH SLAB #1)" OR "PRECAST CONCRETE STRUCTURE (APPROACH SLAB #2)"

* CAST-IN-PLACE CONCRETE SHALL INCLUDE ALL CONCRETE PLACED IN THE APPROACH SLAB CLOSURE POURS, AND SUBSTRUCTURE CONCRETE FOR PILE CAVITITES AS DETAILED IN THE PLANS.

STATE OF VERMONT
AGENCY OF TRANSPORTATION

QUANTITY SHEET 1

SUMMARY OF ESTIMATED QUANTITIES					TOTALS		DESCRIPTIONS			
ROADWAY	LANDSCAPING	EROSION CONTROL	BRIDGE	FULL C.E. ITEMS	GRAND TOTAL	FINAL	UNIT	ITEMS	ITEM NUMBER	ROUND
0.1					0.1		ACRE	CLEARING AND GRUBBING, INCLUDING INDIVIDUAL TREES AND STUMPS	201.11	
2481					2481		CY	COMMON EXCAVATION	203.15	
			875		875		CY	UNCLASSIFIED CHANNEL EXCAVATION	203.27	
320					320		CY	EARTH BORROW	203.30	
860					860		CY	SAND BORROW	203.31	
1					1		CY	TRENCH EXCAVATION OF EARTH, EXPLORATORY (N.A.B.I.)	204.22	
			460		460		CY	STRUCTURE EXCAVATION	204.25	
			260		260		CY	GRANULAR BACKFILL FOR STRUCTURES	204.30	
			1		1		LS	COFFERDAM (NORTH ABUTMENT)	208.40	
			1		1		LS	COFFERDAM (SOUTH ABUTMENT)	208.40	
128					128		SY	COLD PLANING, BITUMINOUS PAVEMENT	210.10	
1640					1640		CY	SUBBASE OF DENSE GRADED CRUSHED STONE	301.35	
130					130		CY	AGGREGATE SURFACE COURSE	401.10	
20.3					20.3		CWT	EMULSIFIED ASPHALT	404.65	
910					910		TON	BITUMINOUS CONCRETE PAVEMENT	406.25	
			219		219		CY	CONCRETE, HIGH PERFORMANCE CLASS A	501.33	
			13		13		CY	CONCRETE, HIGH PERFORMANCE CLASS B	501.34	
			1		1		LS	FURNISHING EQUIPMENT FOR DRIVING PILING	504.10	
			800		800		LF	STEEL PILING, HP 14 X 102	505.19	
			2		2		EACH	DYNAMIC PILE LOADING TEST	505.45	
			205850		205850		LB	STRUCTURAL STEEL, CURVED PLATE GIRDER	506.56	
			65000		65000		LB	REINFORCING STEEL, LEVEL II	507.12	
			1		1		LS	SHEAR CONNECTORS (1458 - 7/8" X 7")	508.15	
			22		22		GAL	WATER REPELLENT, SILANE	514.10	
			55		55		LF	BRIDGE EXPANSION JOINT, ASPHALTIC PLUG	516.10	
			530		530		SY	MEMBRANE WATERPROOFING, SPRAY APPLIED	520.10	
			55		55		LF	JOINT SEALER, HOT POURED	524.11	
			358		358		LF	BRIDGE RAILING, GALVANIZED 2 RAIL BOX BEAM	525.33	
			1		1		EACH	REMOVAL OF STRUCTURE (4,300 SF -EST)	529.15	
			1		1		LS	PRECAST CONCRETE STRUCTURE (ABUTMENT #1)	540.10	
			1		1		LS	PRECAST CONCRETE STRUCTURE (ABUTMENT #2)	540.10	
			1		1		LS	PRECAST CONCRETE STRUCTURE (APPROACH SLAB #1)	540.10	
			1		1		LS	PRECAST CONCRETE STRUCTURE (APPROACH SLAB #2)	540.10	
101					101		LF	18" CPEP(SL)	601.2615	
			560		560		CY	STONE FILL, TYPE II	613.11	
			772		772		CY	STONE FILL, TYPE IV	613.13	
4					4		EACH	STEEL MARKER POSTS	619.16	
		1610			1610		LF	WOVEN WIRE FENCE WITH WOOD POSTS	620.26	
317					317		LF	STEEL BEAM GUARDRAIL, GALVANIZED	621.20	
3					3		EACH	MANUFACTURED TERMINAL SECTION, FLARED	621.50	

DETAILED SUMMARY OF QUANTITIES

QUANTITIES	UNIT	ITEMS
		EARTHWORK SUMMARY
2481	CY	COMMON EXCAVATION (2481 x 1.0)
657	CY	UNCLASSIFIED CHANNEL EXCAVATION (875 x 0.75)
460	CY	STRUCTURE EXCAVATION (460 x 1.00)
3598	CY	SUBTOTAL
2	CY	ROUNDING
3600	CY	TOTAL FILL AVAILABLE
320	CY	TOTAL FILL REQUIRED
3280	CY	TOTAL WASTE
		BITUMINOUS CONCRETE PAVEMENT
470	TON	TYPE II
440	TON	TYPE IV
910	TON	TOTAL PAVEMENT

PARSONS BRINCKERHOFF
650 ELM STREET
MANCHESTER, NH 03101

PROJECT NAME: NEW HAVEN
PROJECT NUMBER: BRF 0183 (1)

FILE NAME: z10J070qs.dgn
PROJECT LEADER: G.K.DONINGTON
DESIGNED BY: A.STOCKIN
PROJECT QUANTITIY SHEET (1)

PLOT DATE: 13-MARCH-2015
DRAWN BY: S.BROWN
CHECKED BY: A.STOCKIN
SHEET 5 OF 66

STATE OF VERMONT
AGENCY OF TRANSPORTATION

QUANTITY SHEET 2

SUMMARY OF ESTIMATED QUANTITIES					TOTALS		DESCRIPTIONS			
ROADWAY	LANDSCAPING	EROSION CONTROL	BRIDGE	FULL C.E. ITEMS	GRAND TOTAL	FINAL	UNIT	ITEMS	ITEM NUMBER	ROUND
1					1		EACH	MANUFACTURED TERMINAL SECTION, TANGENT	621.51	
3					3		EACH	TERMINAL CONNECTOR FOR STEEL BEAM GUARDRAIL	621.53	
1					1		EACH	ANCHOR FOR STEEL BEAM RAIL	621.60	
4					4		EACH	GUARDRAIL APPROACH SECTION, GALVANIZED 2 RAIL BOX BEAM	621.72	
60					60		LF	TEMPORARY TRAFFIC BARRIER	621.90	
80					80		HR	UNIFORMED TRAFFIC OFFICERS	630.10	
800					800		HR	FLAGGERS	630.15	
				1	1		LS	FIELD OFFICE, ENGINEERS	631.10	
				1	1		LS	TESTING EQUIPMENT, CONCRETE	631.16	
				1	1		LS	TESTING EQUIPMENT, BITUMINOUS	631.17	
				3000	3000		DL	FIELD OFFICE TELEPHONE (N.A.B.I.)	631.26	
1					1		LS	MOBILIZATION/DEMOBILIZATION	635.11	
1					1		LS	TRAFFIC CONTROL	641.10	
2					2		EACH	PORTABLE CHANGEABLE MESSAGE SIGN	641.15	
1673					1673		LF	4 INCH WHITE LINE	646.20	
1580					1580		LF	4 INCH YELLOW LINE	646.21	
			637		637		SY	GEOTEXTILE UNDER STONE FILL	649.31	
		720			720		SY	GEOTEXTILE FOR SILT FENCE	649.51	
		190			190		SY	GEOTEXTILE FOR FILTER CURTAIN	649.61	
	110				110		LB	SEED	651.15	
	330				330		LB	FERTILIZER	651.18	
	0.6				0.6		TON	AGRICULTURAL LIMESTONE	651.20	
	1.75				1.75		TON	HAY MULCH	651.25	
	240				240		CY	TOPSOIL	651.35	
	580				580		SY	GRUBBING MATERIAL	651.40	
		1			1		LS	EPSC PLAN	652.10	
		40			40		HR	MONITORING EPSC PLAN	652.20	
		1			1		LU	MAINTENANCE OF EPSC PLAN (N.A.B.I.)	652.30	
		206			206		SY	TEMPORARY EROSION MATTING	653.20	
		206			206		SY	PERMANENT EROSION MATTING	653.21	
		85			85		CY	VEHICLE TRACKING PAD	653.35	
		2			2		EACH	INLET PROTECTION DEVICE, TYPE I	653.40	
		1			1		EACH	FILTER BAG	653.45	
		1925			1925		LF	PROJECT DEMARCATION FENCE	653.55	
50					50		SF	TRAFFIC SIGNS, TYPE A	675.20	
40					40		LF	SQUARE TUBE SIGN POST AND ANCHOR	675.341	
1					1		LU	PRICE ADJUSTMENT, FUEL (N.A.B.I.)	690.50	
			13		13		CY	SPECIAL PROVISION (HIGH PERFORMANCE CONCRETE, RAPID SET)(FPQ)	900.608	
			117		117		LF	SPECIAL PROVISION (DRILLED SHAFT IN EARTH)	900.640	
			20		20		LF	SPECIAL PROVISION (DRILLED SHAFT OBSTRUCTION DRILLING AND REMOVAL)	900.640	

DETAILED SUMMARY OF QUANTITIES		
QUANTITIES	UNIT	ITEMS

PARSONS BRINCKERHOFF
650 ELM STREET
MANCHESTER, NH 03101

PROJECT NAME: NEW HAVEN
PROJECT NUMBER: BRF 0183 (1)

FILE NAME: z10J070qs.dgn
PROJECT LEADER: G.K.DONINGTON
DESIGNED BY: A.STOCKIN
PROJECT QUANTITY SHEET (2)

PLOT DATE: 13-MARCH-2015
DRAWN BY: S.BROWN
CHECKED BY: A.STOCKIN
SHEET 6 OF 66

STATE OF VERMONT
AGENCY OF TRANSPORTATION

QUANTITY SHEET 3

SUMMARY OF ESTIMATED QUANTITIES					TOTALS		DESCRIPTIONS			
ROADWAY	LANDSCAPING	EROSION CONTROL	BRIDGE	FULL C.E. ITEMS	GRAND TOTAL	FINAL	UNIT	ITEMS	ITEM NUMBER	ROUND
			1		1		LS	SPECIAL PROVISION (CPM SCHEDULE)	900.645	
			1		1		LS	SPECIAL PROVISION (MOBILIZATION OF DRILLED SHAFT EQUIPMENT)	900.645	
			1		1		LS	SPECIAL PROVISION (PRECAST INTEGRAL PIER CAP PRODUCTION)	900.645	
			1		1		LU	SPECIAL PROVISION (INCENTIVE/DISINCENTIVE(N.A.B.I))	900.650	
			8140		8140		SF	SPECIAL PROVISION (METALIZING OF STRUCTURAL STEEL)	900.670	

DETAILED SUMMARY OF QUANTITIES

QUANTITIES	UNIT	ITEMS

PARSONS BRINCKERHOFF
650 ELM STREET
MANCHESTER, NH 03101

PROJECT NAME: NEW HAVEN
PROJECT NUMBER: BRF 0183 (I)

FILE NAME: z10J070qs.dgn
PROJECT LEADER: G.K.DONINGTON
DESIGNED BY: A.STOCKIN
PROJECT QUANTITY SHEET (3)

PLOT DATE: 13-MARCH-2015
DRAWN BY: S.BROWN
CHECKED BY: A.STOCKIN

GENERAL INFORMATION

SYMBOLOGY LEGEND NOTE

THE SYMBOLOGY ON THIS SHEET IS INTENDED TO COVER STANDARD CONVENTIONAL SYMBOLOGY. THE SYMBOLOGY IS USED FOR EXISTING & PROPOSED FEATURES WITH HEAVIER LINEWEIGHT, IN COMBINATION WITH PROJECT ANNOTATION, AS NOTED ON PROJECT PLAN SHEETS. THIS LEGEND SHEET COVERS THE BASICS. SYMBOLOGY ON PLANS MAY VARY, PLAN ANNOTATIONS AND NOTES SHOULD BE USED TO CLARIFY AS NEEDED.

R.O.W. ABBREVIATIONS (CODES) & SYMBOLS

POINT	CODE	DESCRIPTION
	CH	CHANNEL EASEMENT
	CONST	CONSTRUCTION EASEMENT
	CUL	CULVERT EASEMENT
	D&C	DISCONNECT & CONNECT
	DIT	DITCH EASEMENT
	DR	DRAINAGE EASEMENT
	DRIVE	DRIVEWAY EASEMENT
	EC	EROSION CONTROL
	HWY	HIGHWAY EASEMENT
	I&M	INSTALL & MAINTAIN EASEMENT
	LAND	LANDSCAPE EASEMENT
	R&RES	REMOVE & RESET
	R&REP	REMOVE & REPLACE
	SR	SLOPE RIGHT
	UE	UTILITY EASEMENT
	(P)	PERMANENT EASEMENT
	(T)	TEMPORARY EASEMENT
■	BNDNS	BOUND SET
⧈	BNDNS	BOUND TO BE SET
●	IPNS	IRON PIN SET
◎	IPNS	IRON PIN TO BE SET
⊠	CALC	EXISTING ROW POINT
○	PROW	PROPOSED ROW POINT
[LENGTH]		LENGTH CARRIED ON NEXT SHEET

COMMON TOPOGRAPHIC POINT SYMBOLS

POINT	CODE	DESCRIPTION
	APL	BOUND APPARENT LOCATION
	BM	BENCH MARK
	BND	BOUND
	CB	CATCH BASIN
	COMB	COMBINATION POLE
	DITHR	DROP INLET THROATED DNC
	EL	ELECTRIC POWER POLE
	FPOLE	FLAGPOLE
	GASFIL	GAS FILLER
	GP	GUIDE POST
	GSO	GAS SHUT OFF
	GUY	GUY POLE
	GUYW	GUY WIRE
	GV	GATE VALUE
	H	TREE HARDWOOD
	HCTRL	CONTROL HORIZONTAL
	HVCTRL	CONTROL HORIZ. & VERTICAL
	HYD	HYDRANT
	IP	IRON PIN
	IPIPE	IRON PIPE
	LI	LIGHT - STREET OR YARD
	MB	MAILBOX
	MH	MANHOLE (MH)
	MM	MILE MARKER
	PM	PARKING METER
	PMK	PROJECT MARKER
	POST	POST STONE/WOOD
	RRSIG	RAILROAD SIGNAL
	RRSL	RAILROAD SWITCH LEVER
	S	TREE SOFTWOOD
	SAT	SATELLITE DISH
	SHRUB	SHRUB
	SIGN	SIGN
	STUMP	STUMP
	TEL	TELEPHONE POLE
	TIE	TIE
	TSIGN	SIGN W/DOUBLE POST
	VCTRL	CONTROL VERTICAL
	WELL	WELL
	WSO	WATER SHUT OFF

THESE ARE COMMON VAOT SURVEY POINT SYMBOLS FOR EXISTING FEATURES, ALSO USED FOR PROPOSED FEATURES WITH HEAVIER LINEWEIGHT, IN COMBINATION WITH PROPOSED ANNOTATION.

PROPOSED GEOMETRY CODES

CODE	DESCRIPTION
PC	POINT OF CURVATURE
PI	POINT OF INTERSECTION
CC	CENTER OF CURVE
PT	POINT OF TANGENCY
PCC	POINT OF COMPOUND CURVE
PRC	POINT OF REVERSE CURVE
POB	POINT OF BEGINNING
POE	POINT OF ENDING
STA	STATION PREFIX
AH	AHEAD STATION SUFFIX
BK	BACK STATION SUFFIX
D	CURVE DEGREE OF (100FT)
R	CURVE RADUIS OF
T	CURVE TANGENT LENGTH
L	CURVE LENGTH OF
E	CURVE EXTERNAL DISTANCE

UTILITY SYMBOLOGY

UNDERGROUND UTILITIES

UT	TELEPHONE
UE	ELECTRIC
UTV	CABLE (TV)
	ELECTRIC+CABLE
	ELECTRIC+TELEPHONE
	CABLE+TELEPHONE
	ELECTRIC+CABLE+TELEP.
G	GAS LINE
W	WATER LINE
S	SANITARY SEWER (SEPTIC)

ABOVE GROUND UTILITIES (AERIAL)

T	TELEPHONE
E	ELECTRIC
	CABLE (TV)
	ELECTRIC+CABLE
	ELECTRIC+TELEPHONE
AER E&T	ELECTRIC+TELEPHONE
	CABLE+TELEPHONE
	ELECTRIC+CABLE+TELEP.
	UTILITY POLE GUY WIRE

PROJECT CONSTRUCTION SYMBOLOGY

PROJECT DESIGN & LAYOUT SYMBOLOGY

CZ	CLEAR ZONE
	PLAN LAYOUT MATCHLINE

PROJECT CONSTRUCTION FEATURES

	TOP OF CUT SLOPE
	TOE OF FILL SLOPE
	STONE FILL
	BOTTOM OF DITCH ℄
	CULVERT PROPOSED
	STRUCTURE SUBSURFACE
PDF	PROJECT DEMARCATION FENCE
	BARRIER FENCE
	TREE PROTECTION ZONE (TPZ)
	STRIPING LINE REMOVAL
	SHEET PILES

CONVENTIONAL BOUNDARY SYMBOLOGY

BOUNDARY LINES

TOWN LINE	TOWN BOUNDARY LINE
COUNTY LINE	COUNTY BOUNDARY LINE
STATE LINE	STATE BOUNDARY LINE
	PROPOSED STATE R.O.W. (LIMITED ACCESS)
	PROPOSED STATE R.O.W.
	STATE ROW (LIMITED ACCESS)
	STATE ROW
	TOWN ROW
	PERMANENT EASEMENT LINE (P)
	TEMPORARY EASEMENT LINE (T)
	SURVEY LINE
P/L	PROPERTY LINE (P/L)
SR	SLOPE RIGHTS
6f	6F PROPERTY BOUNDARY
4f	4F PROPERTY BOUNDARY
HAZ	HAZARDOUS WASTE

EPSC LAYOUT PLAN SYMBOLOGY

EPSC MEASURES

	FILTER CURTAIN
	SILT FENCE
	SILT FENCE WOVEN WIRE
	CHECK DAM
	DISTURBED AREAS REQUIRING RE-VEGETATION
	EROSION MATTING

ENVIRONMENTAL RESOURCES

	WETLAND BOUNDARY
	RIPARIAN BUFFER ZONE
	WETLAND BUFFER ZONE
	SOIL TYPE BOUNDARY
T&E	THREATENED & ENDANGERED SPECIES
HAZ	HAZARDOUS WASTE AREA
AG	AGRICULTURAL LAND
HABITAT	FISH & WILDLIFE HABITAT
FLOOD PLAIN	FLOOD PLAIN
OHW	ORDINARY HIGH WATER (OHW)
	STORM WATER
	USDA FOREST SERVICE LANDS
	WILDLIFE HABITAT SUIT/CONN

ARCHEOLOGICAL & HISTORIC

ARCH	ARCHEOLOGICAL BOUNDARY
HISTORIC DIST	HISTORIC DISTRICT BOUNDARY
HISTORIC	HISTORIC AREA
H	HISTORIC STRUCTURE

CONVENTIONAL TOPOGRAPHIC SYMBOLOGY

EXISTING FEATURES

	ROAD EDGE PAVEMENT
	ROAD EDGE GRAVEL
	DRIVEWAY EDGE
	DITCH
	FOUNDATION
	FENCE (EXISTING)
	FENCE WOOD POST
	FENCE STEEL POST
	GARDEN
	ROAD GUARDRAIL
	RAILROAD TRACKS
	CULVERT (EXISTING)
	STONE WALL
	WALL
	WOOD LINE
	BRUSH LINE
	HEDGE
	BODY OF WATER EDGE
	LEDGE EXPOSED

PARSONS BRINCKERHOFF
650 ELM STREET
MANCHESTER, NH 03101

PROJECT NAME: NEW HAVEN
PROJECT NUMBER: BRF 0183 (1)

FILE NAME: z10J070lgnd.dgn
PROJECT LEADER: G.K. DONINGTON
DESIGNED BY: S.BROWN
LEGEND SHEET

PLOT DATE: 13-MARCH-2015
DRAWN BY: S.BROWN
CHECKED BY: A.STOCKIN
SHEET 8 OF 66

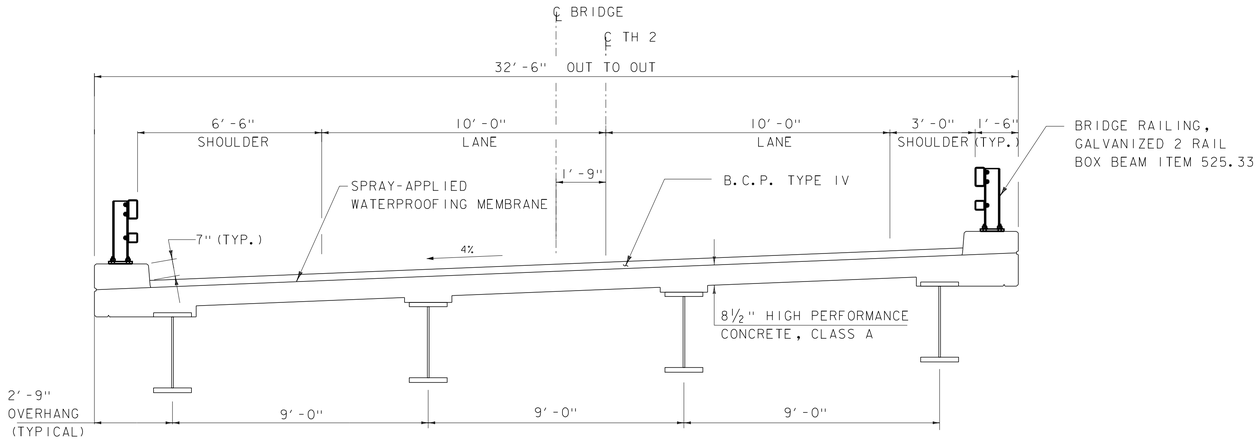

BRIDGE TYPICAL SECTION

SCALE: ⅜" = 1'-0"

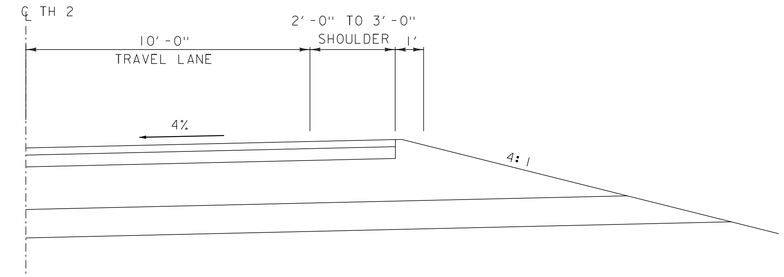

HIGH SIDE OF BANKED SECTION

NOT TO SCALE

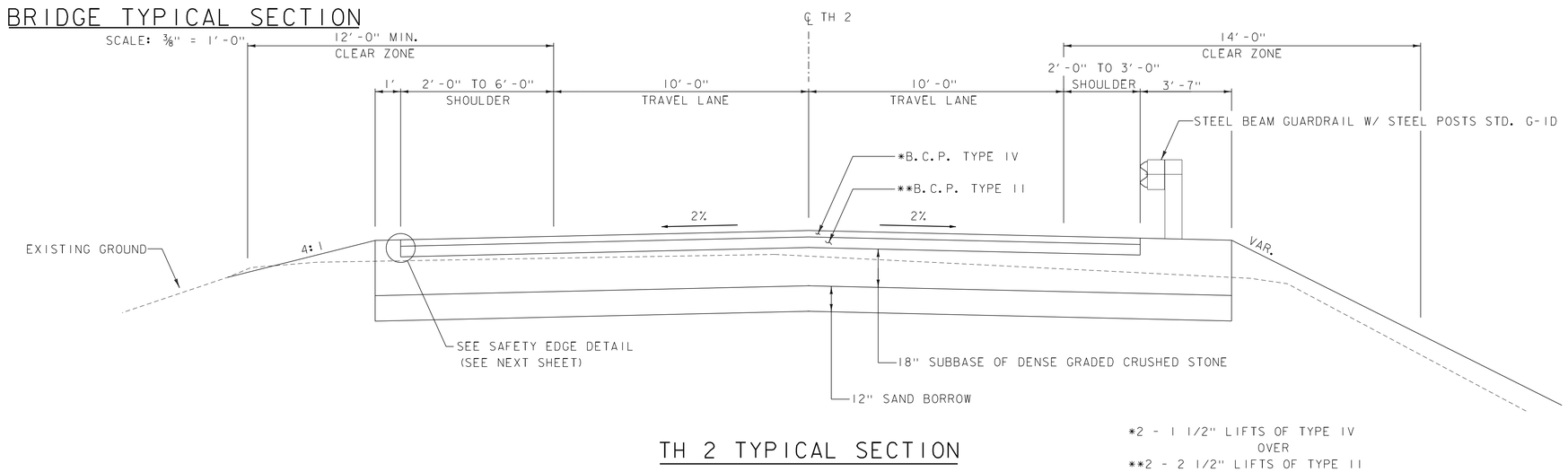

TH 2 TYPICAL SECTION

NOT TO SCALE

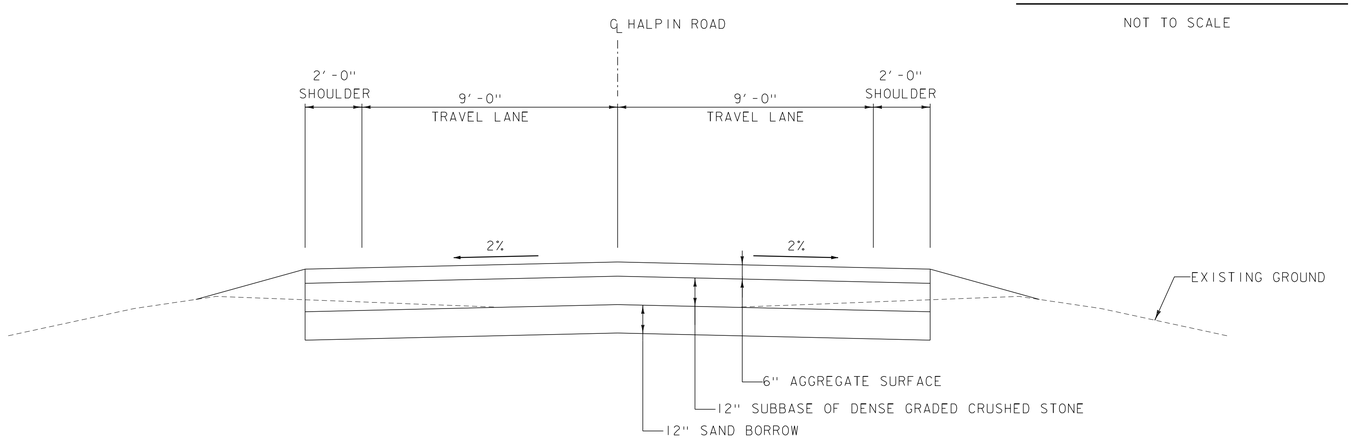

HALPIN ROAD TYPICAL SECTION

NOT TO SCALE

NOTES

SLOPE ROUNDING: ALL CUT SLOPES TO BE ROUNDED IN ACCORDANCE WITH STANDARD SHEET B - 5.

TACK COAT: EMULSIFIED ASPHALT IS TO BE APPLIED AT THE RATE OF 0.040 GAL/SY ON ALL COLD PLANED SURFACES AND BETWEEN SUCCESSIVE COURSES OF PAVEMENT AS DIRECTED BY THE ENGINEER.

MATERIAL ITEM (TOTAL DEPTH)	THICKNESS TOLERANCE
PAVEMENT	+/- 1/4"
SUBBASE	+/- 1"
SAND BORROW	+/- 1"

PROJECT NAME: NEW HAVEN
PROJECT NUMBER: BRF 0183 (1)

PARSONS BRINCKERHOFF
650 ELM STREET
MANCHESTER, NH 03101

FILE NAME: z10J070Typ.dgn
PROJECT LEADER: K. DONINGTON
DESIGNED BY: P. ARMANO
TYPICAL SECTIONS (1)

PLOT DATE: 13-MARCH-2015
DRAWN BY: P. ARMANO
CHECKED BY: A.STOCKIN
SHEET 9 OF 66

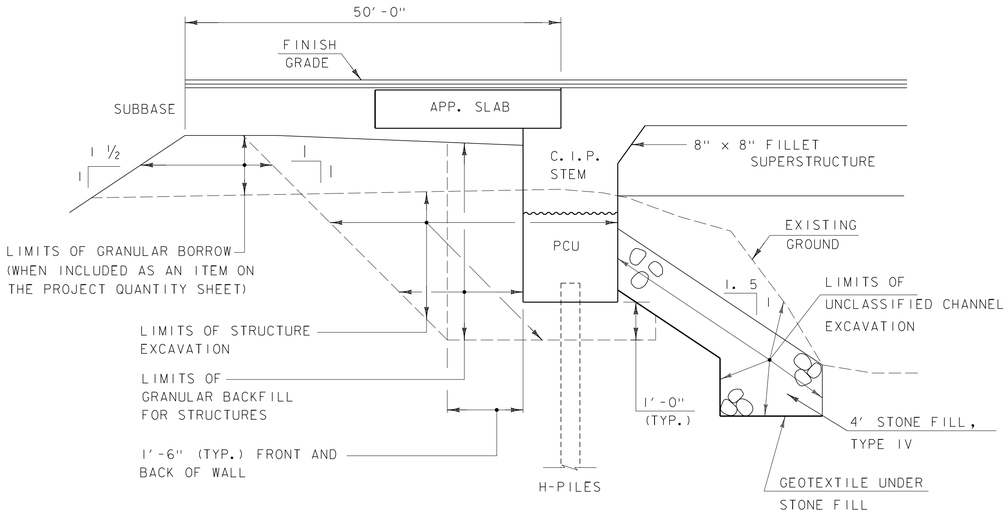

TYPICAL ABUTMENT SECTION

(NOT TO SCALE)

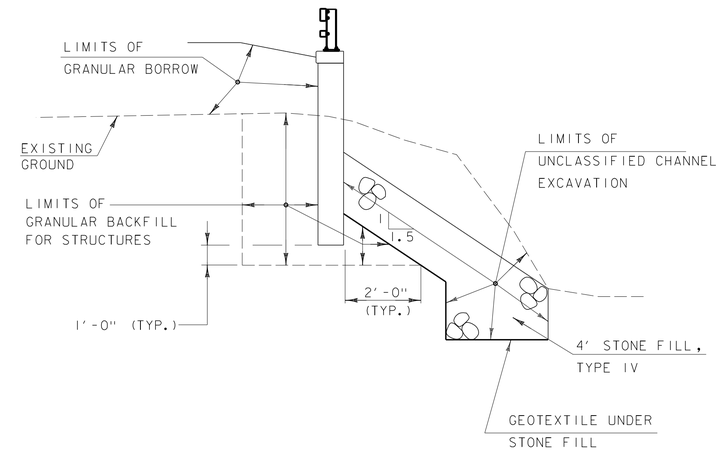

TYPICAL WINGWALL SECTION

(NOT TO SCALE)

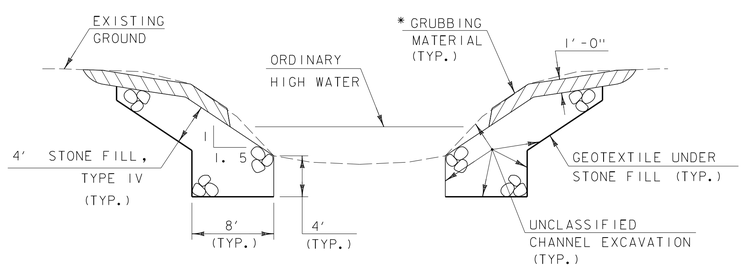

TYPICAL CHANNEL SECTION

(NOT TO SCALE)

*WHENEVER CHANNEL SLOPE INTERSECTS ROADWAY SUBBASE, GRUBBING MATERIAL SHALL BEGIN AT THE BOTTOM OF SUBBASE.

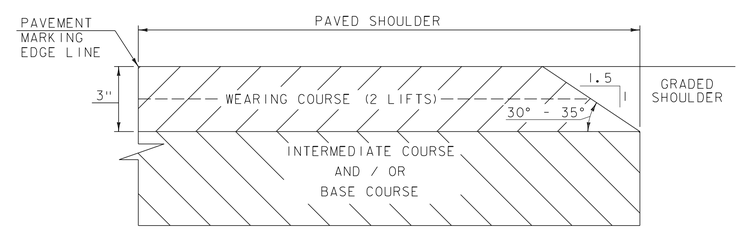

SAFETY EDGE DETAIL

(NOT TO SCALE)

THE EDGE OF PAVEMENT SHALL BE FORMED IN SUCH A WAY THAT THE BITUMINOUS CONCRETE PAVEMENT IS EXTRUDED OR COMPRESSED TO FORM THE 30 TO 35 DEGREE ANGLE. DEVICES THAT SIMPLY STRIKE-OFF THE MIX WITHOUT PROVIDING ANY COMPACTIVE EFFORT WILL NOT BE ALLOWED.

THE PAVED SHOULDER EXTENDS FROM THE EDGE OF TRAVELED WAY TO THE EDGE OF THE WEARING COURSE, INCLUDING THE "SAFETY EDGE".

PROJECT NAME: NEW HAVEN
PROJECT NUMBER: BRF 0183 (1)

PARSONS BRINCKERHOFF
650 ELM STREET
MANCHESTER, NH 03101

FILE NAME: z10j070Typ.dgn
PROJECT LEADER: K. DONINGTON
DESIGNED BY: P. ARMANO
TYPICAL SECTIONS (2)

PLOT DATE: 13-MARCH-2015
DRAWN BY: P. ARMANO
CHECKED BY: A.STOCKIN
SHEET 10 OF 66

TRAVERSE TIES

HVCTRL #41

NORTH = 569379.4720
EAST = 1469870.4510
ELEV. = 261.6170

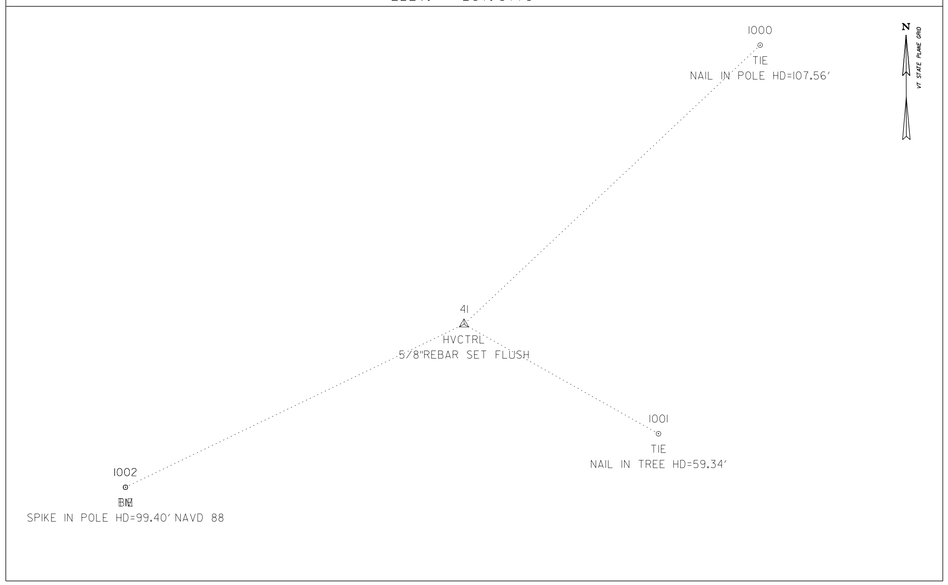

HVCTRL #40

NORTH = 569639.9160
EAST = 1469964.8700
ELEV. = 263.7780

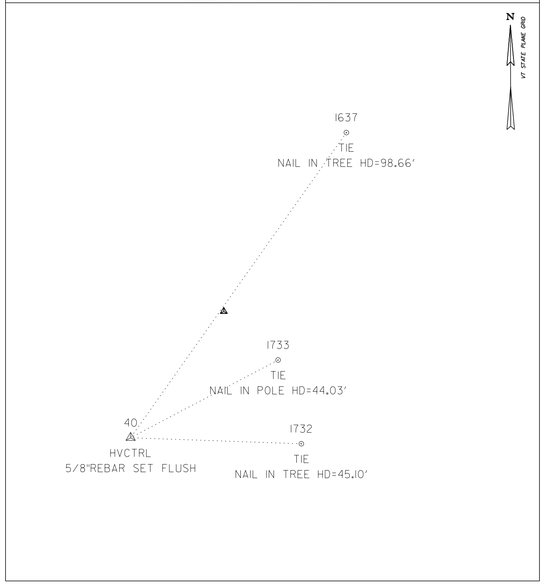

HVCTRL #42

NORTH = 569537.5928
EAST = 1470021.1820
ELEV. = 235.9805

NOT TIED

HVCTRL #43

NORTH = 569559.3881
EAST = 1469883.6507
ELEV. = 252.3823

NOT TIED

HVCTRL #44

NORTH = 569609.7591
EAST = 1469990.7591
ELEV. = 253.7697

NOT TIED

HVCTRL #400

NORTH = 569941.6032
EAST = 1470014.2142
ELEV. = 260.5875

NOT TIED

HVCTRL #410

NORTH = 569478.9263
EAST = 1470163.6942
ELEV. = 258.6911

NOT TIED

HVCTRL #411

NORTH = 569538.3766
EAST = 1469697.0164
ELEV. = 251.8012

NOT TIED

DATUM

VERTICAL SEE TITLE SHEET

HORIZONTAL SEE TITLE SHEET

ADJUSTMENT NONE

PARSONS BRINCKERHOFF
650 ELM STREET
MANCHESTER, NH 03101

PROJECT NAME: NEW HAVEN
PROJECT NUMBER: BRF 0183 (1)

FILE NAME: z10j070ti.dgn
PROJECT LEADER: K. DONINGTON
DESIGNED BY: P. ARMANO
SURVEY TIE SHEET (1)

PLOT DATE: 13-MARCH-2015
DRAWN BY: P. ARMANO
CHECKED BY: R. BENJAMIN
SHEET 11 OF 66

ALIGNMENT TIES
EAST RIVER ROAD

POB 497+63.78	PC 497+77.11	PT 499+62.34	PC 500+82.36	PT 506+44.81	PC 507+11.30	PT 508+39.34
NORTH = 569082.5991	NORTH = 569090.8785	NORTH = 569212.5099	NORTH = 569295.4555	NORTH = 569795.8444	NORTH = 569862.2805	NORTH = 569990.0897
EAST = 1469532.6561	EAST = 1469543.0985	EAST = 1469682.7092	EAST = 1469769.4577	EAST = 1469994.4562	EAST = 1469996.9365	EAST = 1470004.4419
NOT TIED	NOT TIED	NOT TIED	NOT TIED	NOT TIED	NOT TIED	NOT TIED

POE 508+58.84
NORTH = 570009.5353
EAST = 1470006.0008
NOT TIED

ALIGNMENT TIES
HALPIN ROAD

POB 100+00.00	PC 100+63.25	PT 102+67.61	POE 103+92.56
NORTH = 569162.9371	NORTH = 569222.3282	NORTH = 569366.3979	NORTH = 569415.3189
EAST = 1470144.0626	EAST = 1470122.3121	EAST = 1469985.4406	EAST = 1469870.4656
NOT TIED	NOT TIED	NOT TIED	NOT TIED

DATUM

VERTICAL SEE TITLE SHEET

HORIZONTAL SEE TITLE SHEET

ADJUSTMENT NONE

PARSONS BRINCKERHOFF
650 ELM STREET
MANCHESTER, NH 03101

PROJECT NAME: NEW HAVEN

PROJECT NUMBER: BRF 0183 (1)

FILE NAME: z10j070ti.dgn
PROJECT LEADER: K. DONINGTON
DESIGNED BY: P. ARMANO
SURVEY TIE SHEET (2)

PLOT DATE: 13-MARCH-2015
DRAWN BY: P. ARMANO
CHECKED BY: R. BENJAMIN
SHEET 12 OF 66

SIGN DETAILS

D3-1a; 1.5" Radius, 0.5" Border, White on Green;

D3-1b; 1.5" Radius, 0.5" Border, White on Green;

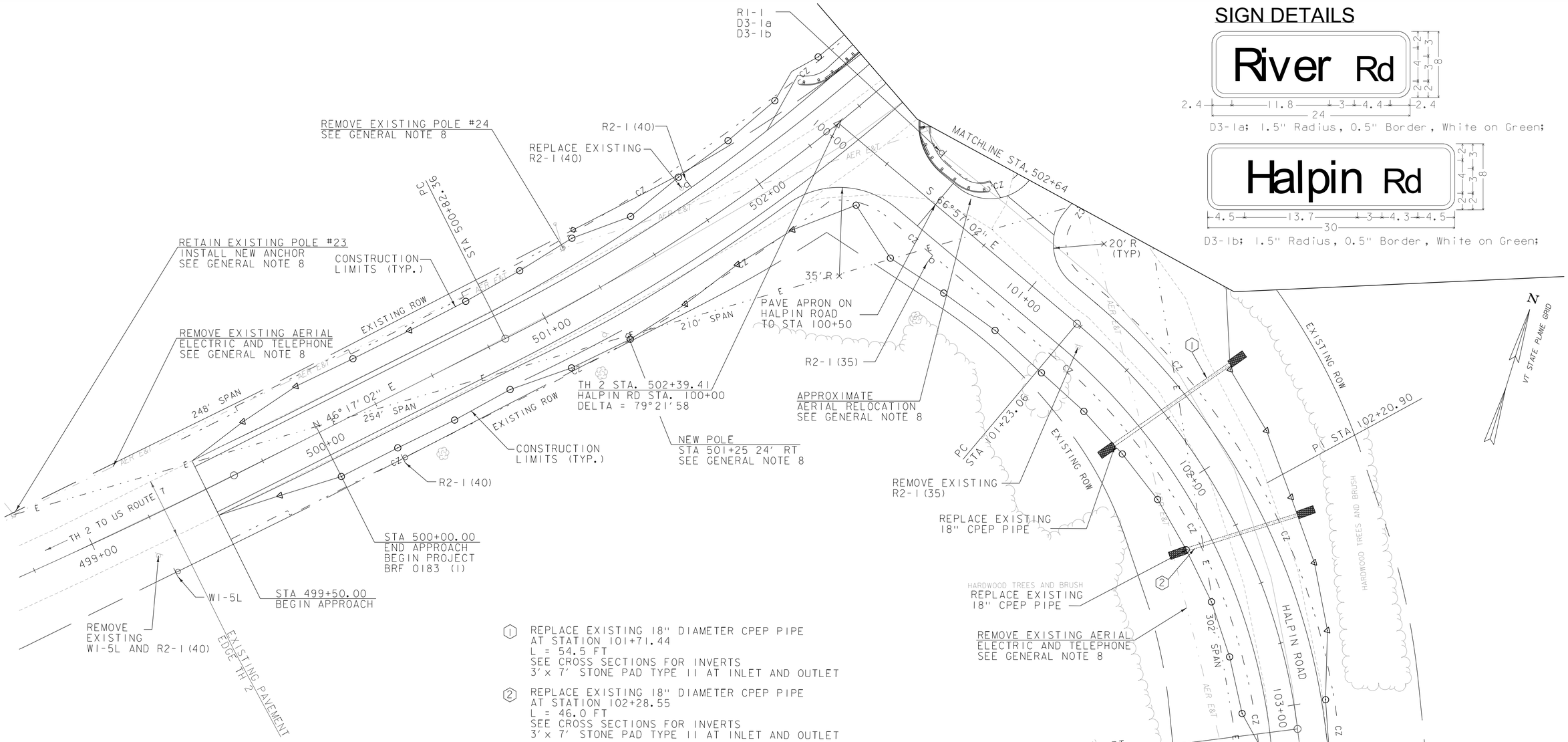

(1) REPLACE EXISTING 18" DIAMETER CPEP PIPE
AT STATION 101+71.44
L = 54.5 FT
SEE CROSS SECTIONS FOR INVERTS
3' x 7' STONE PAD TYPE II AT INLET AND OUTLET

(2) REPLACE EXISTING 18" DIAMETER CPEP PIPE
AT STATION 102+28.55
L = 46.0 FT
SEE CROSS SECTIONS FOR INVERTS
3' x 7' STONE PAD TYPE II AT INLET AND OUTLET

COLD PLANING, BITUMINOUS PAVEMENT

STA. 499+50 - 500+00

4" YELLOW LINE (DOUBLE)

STA. 499+50 - 502+19

4" WHITE LINE

STA. 499+50 - 502+64 LT
STA. 499+50 - 502+04 RT

STEEL BEAM GUARDRAIL, GALVANIZED

STA. 100+20 - 100+50 LT
STA. 502+50 - 502+58 LT

TOWN HIGHWAY 2
CURVE #1

Delta= 44°08'45"
D= 7°50'55"
R= 730.00'
T= 296.02'
L= 562.46'
E= 57.74'
BANKING = 4%

HALPIN ROAD (TH 34)
CURVE #1

DELTA = 42°44'46"
D = 22°55'06"
R = 250.00'
T = 97.84'
L = 186.52'
E = 18.46'

CONSTRUCT DRIVE

STA. 100+81 LT, 19' - GRAVEL

MANUFACTURED TERMINAL SECTION,
G-1D

STA. 100+50 - 100+63 LT
STA. 502+37 - 502+50 LT

SCALE 1" = 20'-0
20 0 20

PARSONS BRINCKERHOFF
650 ELM STREET
MANCHESTER, NH 03101

PROJECT NAME:	NEW HAVEN
PROJECT NUMBER:	BRF 0183 (1)

FILE NAME:	z10j070bdr.dgn	PLOT DATE:	13-MARCH-2015
PROJECT LEADER:	G.K. DONINGTON	DRAWN BY:	P. ARMANO
DESIGNED BY:	P. ARMANO	CHECKED BY:	R. BENJAMIN
LAYOUT SHEET (1)		SHEET 13	OF 66

TOWN HIGHWAY 2
CURVE #2
DELTA= 2°26′43″
D= 1°54′35″
R= 3000.00′
T= 64.03′
L= 128.04′
E= 0.68′

NOTES:
1. REMOVE EXISTING W5-1 (NARROW BRIDGE AHEAD) AT APPROX STA 511+10
2. REMOVE EXISTING W1-5R AND R2-1(40) AT APPROX STA 512+10
3. INSTALL W1-5R AT APPROX STA 512+10
4. INSTALL R2-1(40) AT APPROX STA 511+10

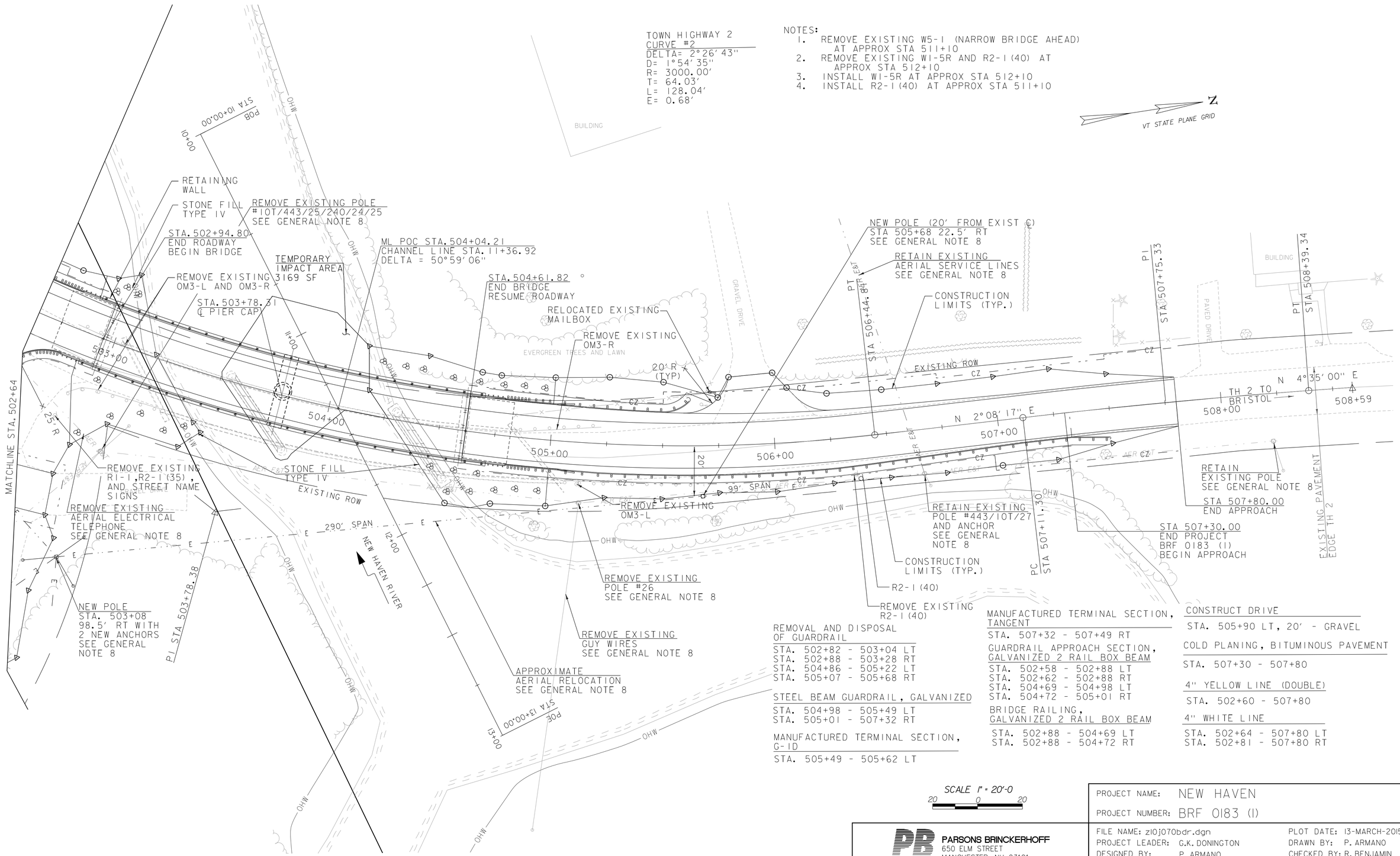

REMOVAL AND DISPOSAL OF GUARDRAIL
STA. 502+82 - 503+04 LT
STA. 502+88 - 503+28 RT
STA. 504+86 - 505+22 LT
STA. 505+07 - 505+68 RT

STEEL BEAM GUARDRAIL, GALVANIZED
STA. 504+98 - 505+49 LT
STA. 505+01 - 507+32 RT

MANUFACTURED TERMINAL SECTION, G-1D
STA. 505+49 - 505+62 LT

MANUFACTURED TERMINAL SECTION, TANGENT
STA. 507+32 - 507+49 RT

GUARDRAIL APPROACH SECTION, GALVANIZED 2 RAIL BOX BEAM
STA. 502+58 - 502+88 LT
STA. 502+62 - 502+88 RT
STA. 504+69 - 504+98 LT
STA. 504+72 - 505+01 RT

BRIDGE RAILING, GALVANIZED 2 RAIL BOX BEAM
STA. 502+88 - 504+69 LT
STA. 502+88 - 504+72 RT

CONSTRUCT DRIVE
STA. 505+90 LT, 20′ - GRAVEL

COLD PLANING, BITUMINOUS PAVEMENT
STA. 507+30 - 507+80

4″ YELLOW LINE (DOUBLE)
STA. 502+60 - 507+80

4″ WHITE LINE
STA. 502+64 - 507+80 LT
STA. 502+81 - 507+80 RT

SCALE 1″ = 20′-0
20 0 20

PARSONS BRINCKERHOFF
650 ELM STREET
MANCHESTER, NH 03101

PROJECT NAME: NEW HAVEN	
PROJECT NUMBER: BRF 0183 (1)	
FILE NAME: z10j070bdr.dgn	PLOT DATE: 13-MARCH-2015
PROJECT LEADER: G.K. DONINGTON	DRAWN BY: P. ARMANO
DESIGNED BY: P. ARMANO	CHECKED BY: R. BENJAMIN
LAYOUT SHEET (2)	SHEET 14 OF 66

PROFILE ALONG CENTERLINE TOWN HIGHWAY 2

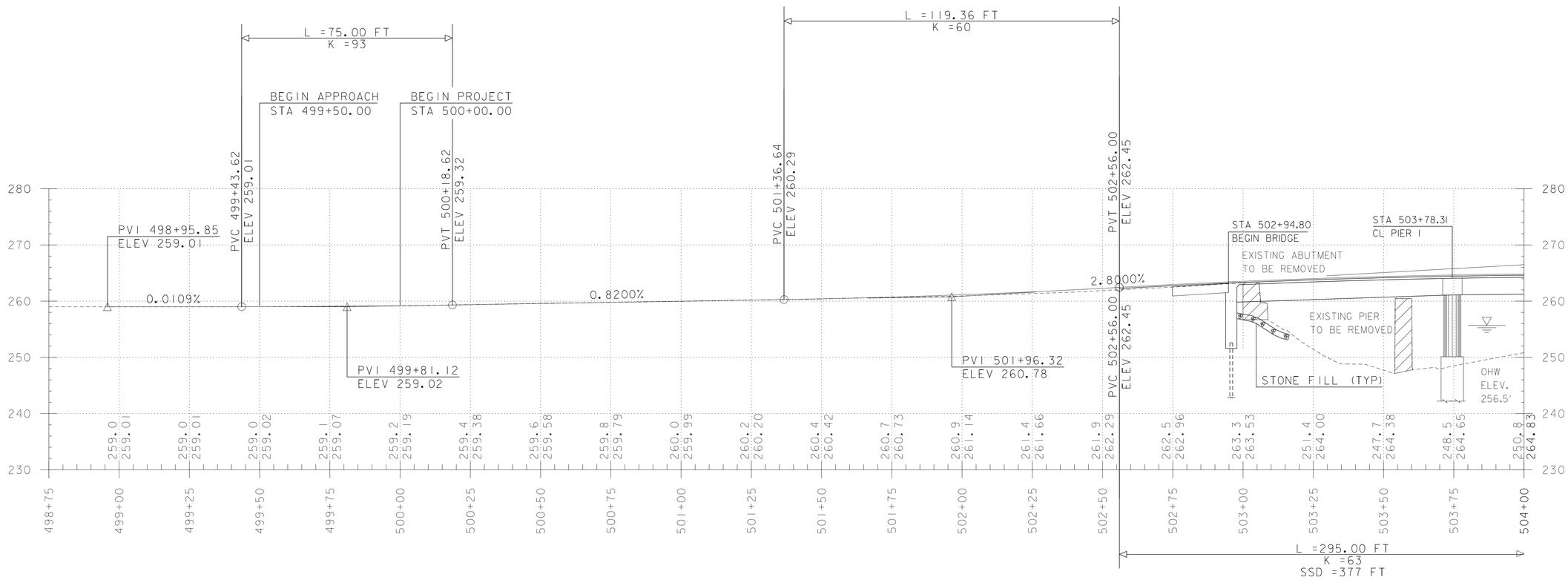

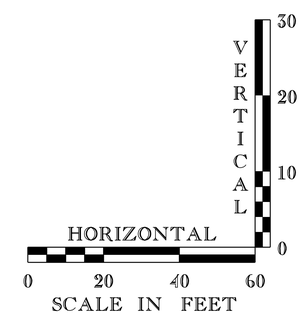

THE GRADES SHOWN TO THE NEAREST TENTH ARE THE ORIGINAL GROUND ELEVATIONS ALONG THE PROPOSED ALIGNMENT AT THE CENTERLINE.
THE GRADES SHOWN TO THE NEAREST HUNDREDTH ARE THE FINISH GRADES ALONG THE PROPOSED ALIGNMENT AT CENTERLINE.

PARSONS BRINCKERHOFF
650 ELM STREET
MANCHESTER, NH 03101

PROJECT NAME: NEW HAVEN	
PROJECT NUMBER: BRF 0183 (1)	
FILE NAME: z10j070Pro.dgn	PLOT DATE: 13-MARCH-2015
PROJECT LEADER: K. DONINGTON	DRAWN BY: P. ARMANO
DESIGNED BY: P. ARMANO	CHECKED BY: R. BENJAMIN
PROFILE SHEET (1)	SHEET 15 OF 66

PROFILE ALONG CENTERLINE TOWN HIGHWAY 2

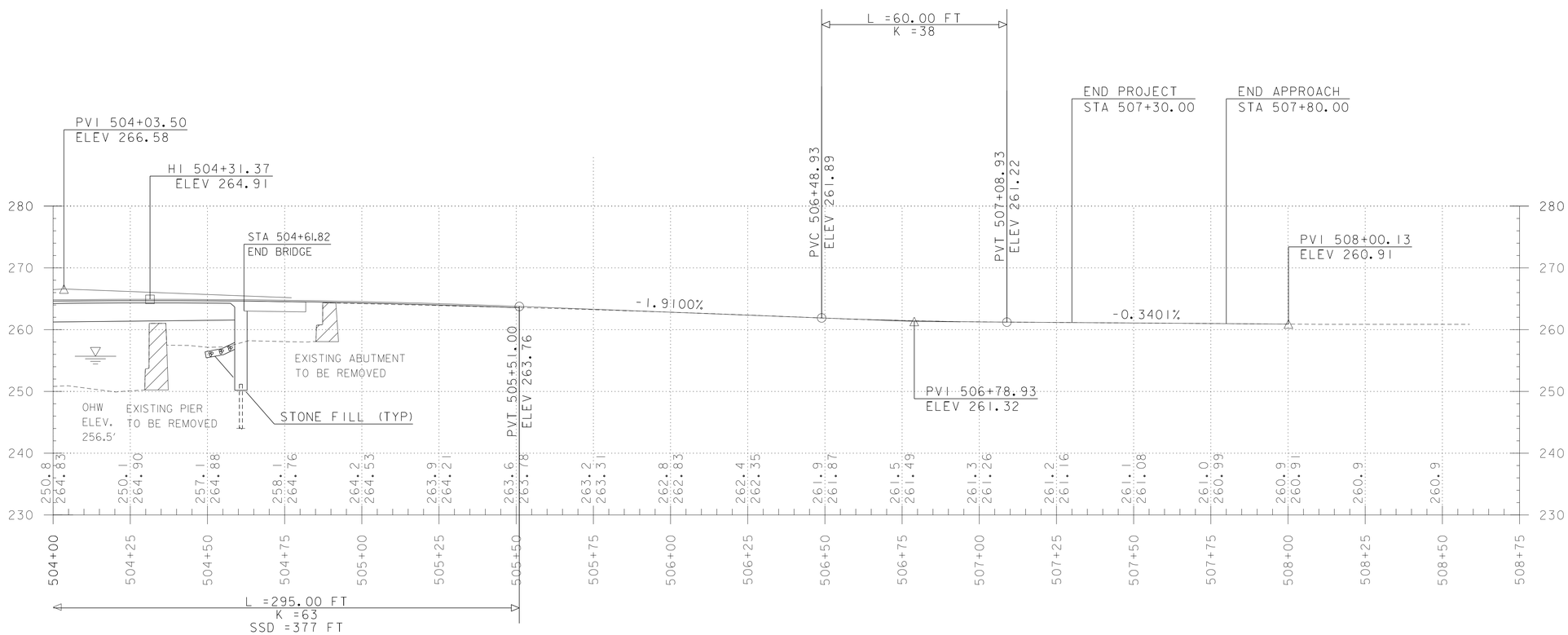

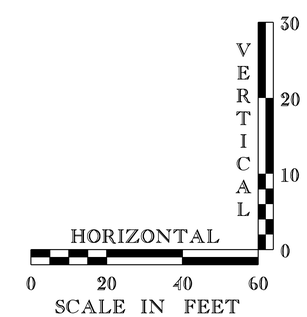

THE GRADES SHOWN TO THE NEAREST TENTH ARE THE ORIGINAL GROUND ELEVATIONS ALONG THE PROPOSED ALIGNMENT AT THE CENTERLINE.
THE GRADES SHOWN TO THE NEAREST HUNDREDTH ARE THE FINISH GRADES ALONG THE PROPOSED ALIGNMENT AT CENTERLINE.

PARSONS BRINCKERHOFF
650 ELM STREET
MANCHESTER, NH 03101

PROJECT NAME: NEW HAVEN	
PROJECT NUMBER: BRF 0183 (1)	
FILE NAME: z10j070Pro.dgn	PLOT DATE: 13-MARCH-2015
PROJECT LEADER: K. DONINGTON	DRAWN BY: P. ARMANO
DESIGNED BY: P. ARMANO	CHECKED BY: R. BENJAMIN
PROFILE SHEET (2)	SHEET 16 OF 66

PROFILE ALONG CENTERLINE HALPIN ROAD

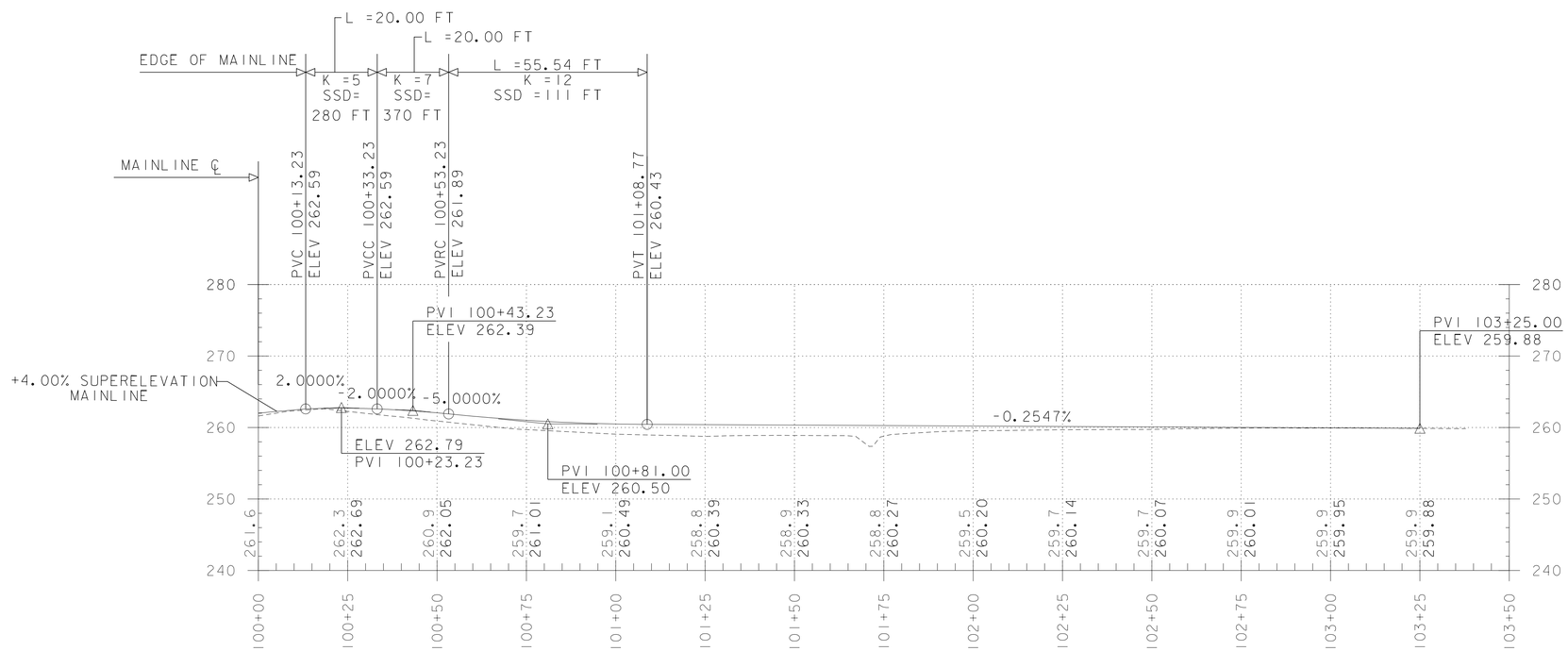

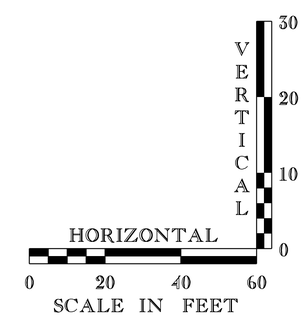

THE GRADES SHOWN TO THE NEAREST TENTH ARE THE ORIGINAL GROUND ELEVATIONS ALONG THE PROPOSED ALIGNMENT AT THE CENTERLINE.
THE GRADES SHOWN TO THE NEAREST HUNDREDTH ARE THE FINISH GRADES ALONG THE PROPOSED ALIGNMENT AT CENTERLINE.

PARSONS BRINCKERHOFF
650 ELM STREET
MANCHESTER, NH 03101

PROJECT NAME: NEW HAVEN	
PROJECT NUMBER: BRF 0183 (1)	
FILE NAME: z10j070Pro.dgn	PLOT DATE: 13-MARCH-2015
PROJECT LEADER: K. DONINGTON	DRAWN BY: P. ARMANO
DESIGNED BY: P. ARMANO	CHECKED BY: R. BENJAIMN
PROFILE SHEET (3)	SHEET 17 OF 66

TRAFFIC CONTROL

1. INSTALL TEMPORARY TRAFFIC SIGNS AND BARRIERS AS SHOWN IN ADDITION TO THE DETOUR DESIGN.
2. TRAFFIC ON THE SOUTHERN BRIDGE APPROACHES ALONG RIVER ROAD AND HALPIN ROAD TO BE CONTROLLED BY FLAGGERS DURING CONSTRUCTION WORK HOURS.
3. MAINTAIN ACCESS TO/FROM HALPIN ROAD THROUGHOUT DURATION OF CONSTRUCTION.
4. REMOVE EXISTING BRIDGE.
5. CONSTRUCT PROPOSED BRIDGE SUBSTRUCTURE.
6. CONSTRUCT PROPOSED BRIDGE SUPERSTRUCTURE.
7. CONSTRUCT ALL TH 2 AND TH 34 ROAD IMPROVEMENTS.

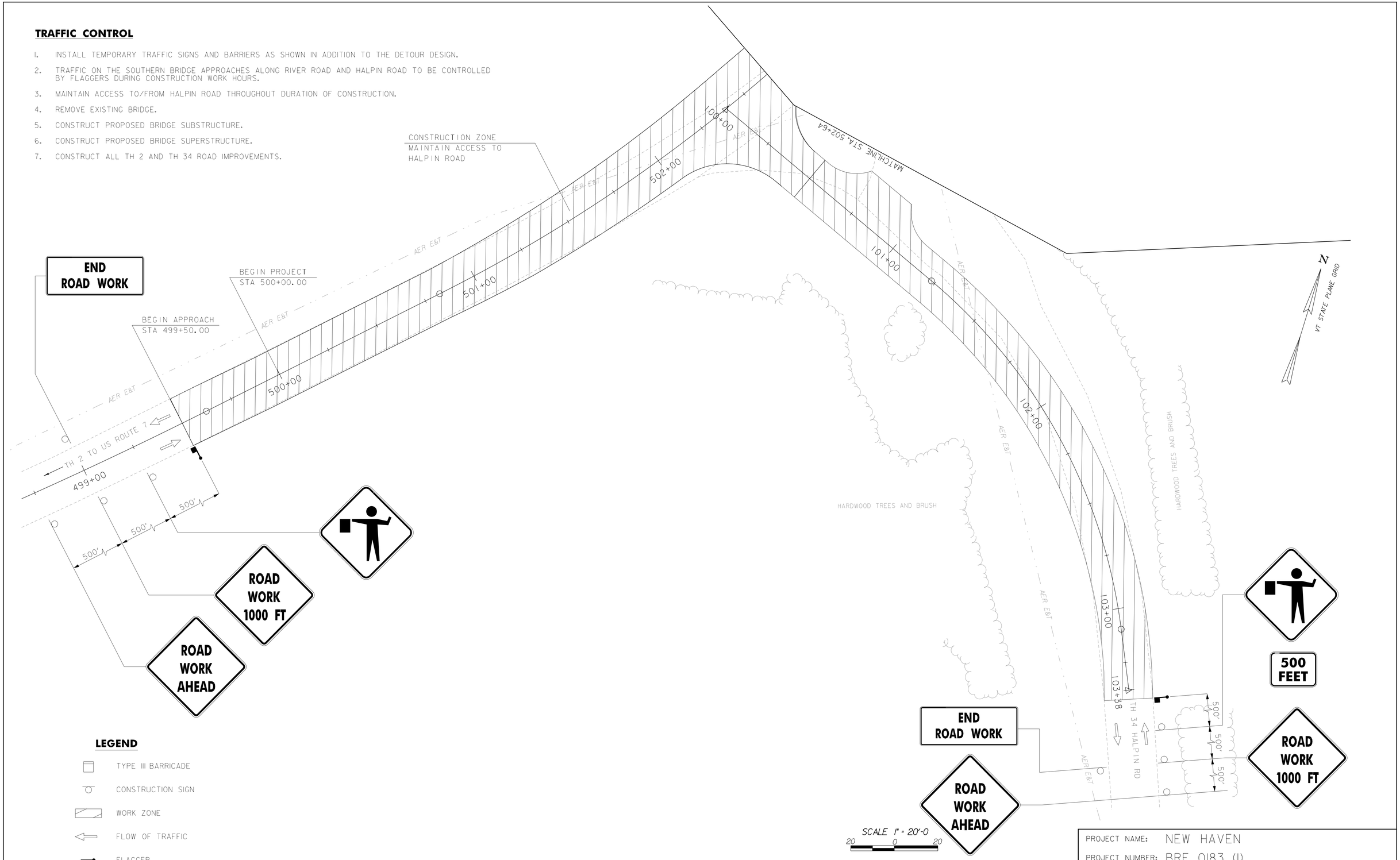

LEGEND

- TYPE III BARRICADE
- CONSTRUCTION SIGN
- WORK ZONE
- FLOW OF TRAFFIC
- FLAGGER

PARSONS BRINCKERHOFF
650 ELM STREET
MANCHESTER, NH 03101

PROJECT NAME: NEW HAVEN
PROJECT NUMBER: BRF 0183 (1)

FILE NAME: z10j070tcs.dgn
PROJECT LEADER: G.K. DONINGTON
DESIGNED BY: P. ARMANO
TRAFFIC CONTROL SHEET (1)

PLOT DATE: 13-MARCH-2015
DRAWN BY: P. ARMANO
CHECKED BY: R. BENJAMIN
SHEET 18 OF 66

ROAD CLOSED

TYPE III BARRICADE (TYP)

STA. 502+94.80 BEGIN BRIDGE

CONSTRUCTION ZONE CLOSED TO TRAFFIC

STA. 504+61.82 END BRIDGE

TYPE III BARRICADE (TYP)

ROAD CLOSED

ROAD CLOSED 1000 FT

ROAD CLOSED 500 FT

ROAD CLOSED TO THRU TRAFFIC

VT STATE PLANE GRID

BUILDING

EVERGREEN TREES AND LAWN

GRAVEL DRIVE

PAVED DRIVE

MATCHLINE STA. 502+64

503+00

504+00

505+00

506+00

507+00

508+00

508+59

500'

500'

TH 2 TO BRISTOL

AER E&T

END PROJECT STA 507+30.00

END APPROACH STA 507+80.00

CONSTRUCTION ZONE MAINTAIN ACCESS TO DRIVEWAY

NEW HAVEN RIVER

LEGEND

- TYPE III BARRICADE
- CONSTRUCTION SIGN
- WORK ZONE
- TEMPORARY CONCRETE BARRIER
- FLAGGER
- FLOW OF TRAFFIC

SCALE 1" = 20'-0

20 0 20

PARSONS BRINCKERHOFF
650 ELM STREET
MANCHESTER, NH 03101

PROJECT NAME: NEW HAVEN

PROJECT NUMBER: BRF 0183 (1)

FILE NAME: z10j070tcs.dgn
PROJECT LEADER: G.K. DONINGTON
DESIGNED BY: P. ARMANO
TRAFFIC CONTROL SHEET (2)

PLOT DATE: 13-MARCH-2015
DRAWN BY: P. ARMANO
CHECKED BY: R. BENJAMIN
SHEET 19 OF 66

STATE OF VERMONT
AGENCY OF TRANSPORTATION

TRAFFIC SIGN SUMMARY SHEET

MILEMARKER, STATION, OR SIGN NUMBER	SIGN LEGEND	SIGN DIMENSIONS EA	SIGN DIMENSIONS WIDTH (in)	SIGN DIMENSIONS HEIGHT (in)	NEW & SALVAGED SIGNS "A"	NEW & SALVAGED SIGNS "B"	SALV SIGN	SALV TIS	EXIST POST RETAIN	EXIST POST SALVAGE	NO. OF POSTS	SQUARE STEEL (in) 1.75 (lb/ft 1.88)	SQUARE STEEL 2.0 (lb/ft 2.42)	SQUARE STEEL 2.5 (lb/ft 3.35)	ANCHOR	SLEEVE	TUBULAR ALUMINUM Ø (in) 3.0 (lb/ft 1.3)	TUBULAR ALUMINUM 4.0 (lb/ft 1.7)	TUBULAR ALUMINUM 4.0 MOD (lb/ft 1.7)	FOUNDATION	TUBULAR STEEL Ø (in) 3.0 (lb/ft 7.6)	TUBULAR STEEL 3.5 (lb/ft 9.0)	TUBULAR STEEL 4.0 (lb/ft 10.8)	TUBULAR STEEL 5.0 (lb/ft 14.6)	W-SHAPE STEEL FTG. SIZE 24"	W-SHAPE STEEL FTG. SIZE 30"	WEIGHT	POST SIZE	SIGN FRAME REQUIRED	REMARKS	SIGN DETAIL: DETAIL ON SHEET NUMBER	SIGN DETAIL: MUTCD/SHSM
D3-1a PBS	River Rd	1	24	8	1.33																									DOUBLE SIDED SIGN MOUNT ABOVE R1-1	11	
D3-1b PBS	Halpin Rd	1	30	8	1.67																									DOUBLE SIDED SIGN MOUNT ABOVE R1-1	11	
R1-1	STOP	1	30	30	6.25						1		X																	N/A	N/A	X
R2-1(35)	SPEED LIMIT 35	1	24	30	5.00						1		X																	N/A	N/A	X
R2-1(40)	SPEED LIMIT 40	4	24	30	20.00						1		X																	N/A	N/A	X
W1-5L	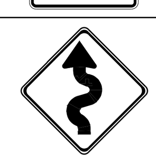	1	30	30	6.25						1		X																	N/A	N/A	X
W1-5R	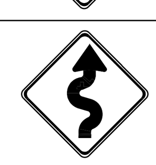	1	30	30	6.25						1		X																	N/A	N/A	X
TOTALS					SF 46.75	SF	EA.	SF				FT	FT	FT		EA	LB	LB	LB	EA.	LB	LB	LB	LB	EA.	EA.	LB					

Square steel total: FT; Tubular aluminum total: LB; Tubular steel total: LB

FINAL POST LENGTHS ARE TO BE DETERMINED IN THE FIELD. POST SIZES ARE COMPUTED BASED ON INFORMATION FURNISHED ON THE STANDARD SHEETS AND THE TRAFFIC & SAFETY DIVISION'S "SIGN POST DESIGN GUIDELINE."

PROJECT NAME: NEW HAVEN
PROJECT NUMBER: BRF 0183 (1)

FILE NAME: z10j070TrafficSummary.dgn
PROJECT LEADER: G.K. DONNINGTON
DESIGNED BY: K. CLARKE
TRAFFIC SIGN SUMMARY SHEET
PLOT DATE: 13-MARCH-2015
DRAWN BY: K. CLARKE
CHECKED BY: R. BENJAMIN
SHEET 20 OF 66

SOIL CLASSIFICATION

AASHTO	
A1	Gravel and Sand
A3	Fine Sand
A2	Silty or Clayey Gravel and Sand
A4	Silty Soil - Low Compressibility
A5	Silty Soil - Highly Compressible
A6	Clayey Soil - Low Compressibility
A7	Clayey Soil - Highly Compressible

ROCK QUALITY DESIGNATION

R.Q.D. (%)	ROCK DESCRIPTION
<25	Very Poor
25 to 50	Poor
51 to 75	Fair
76 to 90	Good
>90	Excellent

SHEAR STRENGTH

UNDRAINED SHEAR STRENGTH IN P.S.F.	CONSISTENCY
<250	Very Soft
250-500	Soft
500-1000	Med. Stiff
1000-2000	Stiff
2000-4000	Very Stiff
>4000	Hard

CORRELATION GUIDE OF "N" TO DENSITY/CONSISTENCY

DENSITY (GRANULAR SOILS) N	DENSITY DESCRIPTIVE TERM	CONSISTENCY (COHESIVE SOILS) N	CONSISTENCY DESCRIPTIVE TERM
<5	Very Loose	<2	Very Soft
5-10	Loose	2-4	Soft
11-24	Med. Dense	5-8	Med. Stiff
25-50	Dense	9-15	Stiff
>50	Very Dense	16-30	Very Stiff
		31-60	Hard
		>60	Very Hard

COMMONLY USED SYMBOLS

▼	Water Elevation
⊗	Standard Penetration Boring
⊕	Auger Boring
⊙	Rod Sounding
S	Sample
N	Standard Penetration Test Blow Count Per Foot For: 2" O.D. Sampler 1 3/8" I.D. Sampler Hammer Weight Of 140 Lbs. Hammer Fall Of 30"
VS	Field Vane Shear Test
US	Undisturbed Soil Sample
B	Blast
DC	Diamond Core
MD	Mud Drill
WA	Wash Ahead
HSA	Hollow Stem Auger
AX	Core Size 1 1/8"
BX	Core Size 1 5/8"
NX	Core Size 2 1/8"
M	Double Tube Core Barrel Used
LL	Liquid Limit
PL	Plastic Limit
PI	Plasticity Index
NP	Non Plastic
w	Moisture Content (Dry Wgt. Basis)
D	Dry
M	Moist
MTW	Moist To Wet
W	Wet
Sat	Saturated
Bo	Boulder
Gr	Gravel
Sa	Sand
Si	Silt
Cl	Clay
HP	Hardpan
Le	Ledge
NLTD	No Ledge To Depth
CNPF	Can Not Penetrate Further
TLOB	Top of Ledge Or Boulder
NR	No Recovery
Rec.	Recovery
%Rec.	Percent Recovery
RQD	Rock Quality Designation
CBR	California Bearing Ratio
<	Less Than
>	Greater Than
R	Refusal (N > 100)
VTSPG	NAD83 - See Note 7

COLOR

blk	Black	pnk	Pink
bl	Blue	pu	Purple
brn	Brown	rd	Red
dk	Dark	tn	Tan
gry	Gray	wh	White
gn	Green	yel	Yellow
lt	Light	mltc	Multicolored
or	Orange		

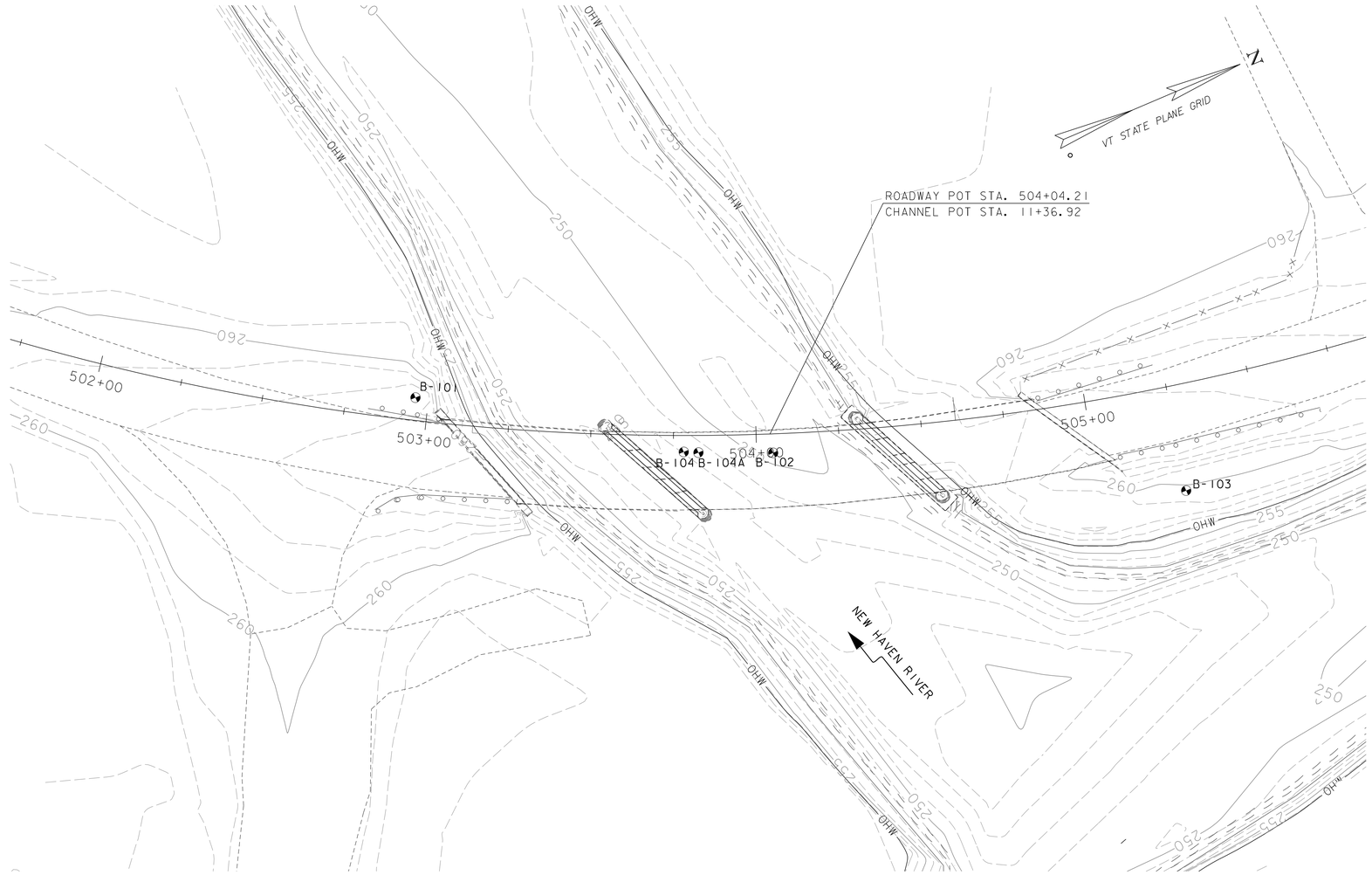

BORING CHART

HOLE NO.	STATION	OFFSET (FT)	NORTHING	EASTING
B-101	RIVER ROAD (TH 2) 502+96.04	6.9' LT	569466.87	1469894.40
B-102	RIVER ROAD (TH 2) 504+04.96	5.7' RT	569559.85	1469952.00
B-103	RIVER ROAD (TH 2) 505+24.71	31.9' RT	569670.33	1470011.41
B-104	RIVER ROAD (TH 2) 503+78.11	5.0' RT	569535.07	1469941.15
B-104A	RIVER ROAD (TH 2) 503+82.53	5.2' RT	569539.09	1469943.07

DEFINITIONS (AASHTO)

BEDROCK (LEDGE) - Rock in its native location of indefinite thickness.

BOULDER - A rock fragment with an average dimension > 12 inches.

COBBLE - Rock fragments with an average dimension between 3 and 12 inches.

GRAVEL - Rounded particles of rock < 3" and > 0.0787" (#10 sieve).

SAND - Particles of rock < 0.0787" (#10 sieve) and > 0.0029" (#200 sieve).

SILT - Soil < 0.0029" (#200 sieve), non or slightly plastic and exhibits no strength when air-dried.

CLAY - Fine grained soil, exhibits plasticity when moist and considerable strength when air-dried.

VARVED - Alternate layers of silt and clay.

HARDPAN - Extremely dense soil, cemented layer, not softened when wet.

MUCK - Soft organic soil (containing > 10% organic material.

MOISTURE CONTENT - Weight of water divided by dry weight of soil.

FLOWING SAND - Granular soil so saturated (loose) that it flows into drill casing during extraction of wash rod.

STRIKE - Angle from magnetic north to line of intersection of bed with a horizontal plane.

DIP - Inclination of bed with a horizontal plane.

GENERAL NOTES

1. The subsurface explorations shown herein were made between 3-9-2012 and 3-30-2012 by the Agency.
2. Soil and rock classifications, properties and descriptions are based on engineering interpretation from available subsurface information by the Agency and may not necessarily reflect actual variations in subsurface conditions that may be encountered between individual boring or sample locations.
3. Observed water levels and/or conditions indicated are as recorded at the time of exploration and may vary according to the prevailing rainfall, methods of exploration and other factors.
4. Engineering judgment was exercised in preparing the subsurface information presented herein. Analysis and interpretation of subsurface data was performed and interpreted for Agency design and estimating purposes. Presentation of the information in the Contract is intended to provide the Contractor access to the same data available to the Agency. The subsurface information is presented in good faith and is not intended as a substitute for personal investigation, independent interpretation, independent analysis or judgment by the Contractor.
5. Pictorial structure details shown on the boring plan layout or soils profile are for illustrative purposes only and may not accurately portray final contract details.
6. Terminology used on boring logs to describe the hardness, degree of weathering, and spacing of fractures, joints and other discontinuities in the bedrock is defined in the AASHTO Manual on Subsurface Investigations, 1988.
7. Northing and Easting coordinates are shown in Vermont State Plane Grid North American Datum 1983 in meters and survey feet.

SCALE 1" = 20'-0
20 0 20

PARSONS BRINCKERHOFF
650 ELM STREET
MANCHESTER, NH 03101

PROJECT NAME: NEW HAVEN
PROJECT NUMBER: BRF 0183 (1)

FILE NAME: z10j070bor.dgn
PROJECT LEADER: R. BENJAMIN
DESIGNED BY: P. ARMANO
BORING INFORMATION SHEET

PLOT DATE: 13-MARCH-2015
DRAWN BY: W. GERHOLD
CHECKED BY: R. BENJAMIN
SHEET 21 OF 66

STATE OF VERMONT
AGENCY OF TRANSPORTATION
MATERIALS & RESEARCH SECTION
SUBSURFACE INFORMATION

BORING LOG

NEW HAVEN
BRF 0183(1)
TH-2 BR-10

Boring No.: **B-101**
Page No.: 1 of 2
Pin No.: 10J070
Checked By: CCB

Boring Crew: PORTER, WELLS, STAAB
Date Started: 3/09/12 Date Finished: 3/30/12
VTSPG NAD83: N 569466.87 ft E 1469894.40 ft
Station: 502+96 Offset: -6.70
Ground Elevation: 262.4 ft

	Casing	Sampler
Type:	WB	SS
I.D.:	4 in	1.5 in
Hammer Wt:	N.A.	140 lb.
Hammer Fall:	N.A.	30 in.
Hammer/Rod Type:	Auto/AWJ	
Rig:	CME 45C SKID	C_E = 1.33

Groundwater Observations		
Date	Depth (ft)	Notes
03/21/12	10.0	Boring at 60 ft.
03/23/12		4.0' above ground.
03/30/12		3.6' above ground.

Depth (ft)	Strata (1)	CLASSIFICATION OF MATERIALS (Description)	Blows/6" (N Value)	Moisture Content %	Gravel %	Sand %	Fines %	LL %	PI %
		A-1-b, SiSaGr, brn, Moist, Rec. = 1.0 ft	WH-6-3-2 (9)	15.3	40.1	39.8	20.1		
		A-2-4, GrSiSa, brn, Moist, Rec. = 0.5 ft	WH-WH-3-4 (3)	14.9	20.8	57.2	22.0		
		A-4, SiSa, brn, Moist, Rec. = 1.3 ft	3-3-3-4 (6)	20.5	6.3	55.9	37.8		
		A-4, SiSa, brn, Moist, Rec. = 1.5 ft	3-4-5-8 (9)	19.8	1.8	60.3	37.9		
		A-1-b, GrSa, brn, Moist, Rec. = 1.3 ft	7-6-7-9 (13)	14.1	35.0	50.7	14.3		
10		A-1-a, Gr, Lt/brn, Moist, Rec. = 0.5 ft, Broken rock was within sample.	9-8-5-7 (13)	8.6	80.1	16.4	3.5		
		A-1-a, SaGr, Lt/brn, Moist, Rec. = 1.0 ft	8-5-4-4 (9)	14.7	50.3	45.4	4.3		
		A-1-a, SaGr, Lt/brn, Moist, Rec. = 0.7 ft	6-6-5-9 (11)	9.6	70.1	26.1	3.8		
		A-1-a, Gr, Lt/brn, Moist, Rec. = 0.5 ft	13-2-2-2 (4)	10.9	78.0	19.7	2.3		
		A-7-6, Cl, gry, Moist, Rec. = 0.7 ft		51.1	3.9	12.1	84.0	47	25
		Cl Shelby Tube, Rec. = 2.0 ft, 18.0 ft - 20.0 ft							
20									
		A-7-6, Cl, gry, Moist, Rec. = 2.0 ft	(WH)	65.3		0.3	99.7	61	36
		Visual Description, Cl, gry, Moist, Rec. = 2.0 ft, Material similar as 23-25 ft.	(WH)	78.7					
30									
		A-7-6, Cl, gry, Moist, Rec. = 2.0 ft	(WR)	65.8		0.3	99.7	66	38
		Visual Description, Cl, gry, Moist, Rec. = 2.0 ft, Material similar as 33-35 ft.	(WR)	67.4					
40									
		A-7-6, Cl, gry, Moist, Rec. = 2.0 ft	(WR)	66.0		0.3	99.7	59	34
		A-7-6, Cl, Dk/gry, Moist, Rec. = 2.0 ft. Shelby Tube sample U2		73.5				77	51
50									
		Visual Description, Cl, gry, Moist, Rec. = 2.0 ft, Material similar as 58-60 ft.	(WR)	67.8					

Bottom of Pile Cap
Abutment I
Elev. = 252.08

Pile Tip
Abutment I
Elev. = 174.08

Notes:
1. Stratification lines represent approximate boundary between material types. Transition may be gradual.
2. N Values have not been corrected for hammer energy. C_E is the hammer energy correction factor.
3. Water level readings have been made at times and under conditions stated. Fluctuations may occur due to other factors than those present at the time measurements were made.

BORING LOG 2 NEW HAVEN BRF 0183(1).GPJ VERMONT AOT.GDT 12/11/13

STATE OF VERMONT
AGENCY OF TRANSPORTATION
MATERIALS & RESEARCH SECTION
SUBSURFACE INFORMATION

BORING LOG

NEW HAVEN
BRF 0183(1)
TH-2 BR-10

Boring No.: **B-101**
Page No.: 2 of 2
Pin No.: 10J070
Checked By: CCB

Boring Crew: PORTER, WELLS, STAAB
Date Started: 3/09/12 Date Finished: 3/30/12
VTSPG NAD83: N 569466.87 ft E 1469894.40 ft
Station: 502+96 Offset: -6.70
Ground Elevation: 262.4 ft

	Casing	Sampler
Type:	WB	SS
I.D.:	4 in	1.5 in
Hammer Wt:	N.A.	140 lb.
Hammer Fall:	N.A.	30 in.
Hammer/Rod Type:	Auto/AWJ	
Rig:	CME 45C SKID	C_E = 1.33

Groundwater Observations		
Date	Depth (ft)	Notes
03/21/12	10.0	Boring at 60 ft.
03/23/12		4.0' above ground.
03/30/12		3.6' above ground.

Depth (ft)	Strata (1)	CLASSIFICATION OF MATERIALS (Description)	Blows/6" (N Value)	Moisture Content %	Gravel %	Sand %	Fines %	LL %	PI %
60		A-7-6, Cl, gry, Moist, Rec. = 2.0 ft	(WR)	53.8		0.4	99.6	54	29
		A-6, SiCl, gry, Moist, Rec. = 1.0 ft	(WR)	42.1		1.9	98.1	36	17
70		A-4, SiSa, gry, Moist, Rec. = 1.9 ft	(WH)	26.2	0.4	52.2	47.4		
		A-4, SiSa, gry, Moist, Rec. = 2.0 ft	6-8-1-1 (9)	18.7	13.5	45.6	40.9		
80		A-2-4, GrSiSa, gry, Moist, Rec. = 1.0 ft, Very hard drilling.	21-18-16-15 (34)	8.5	25.5	46.0	28.5		
		Field Note:, Boulders & Cobbles, Started mud drilling to advance casing.							
		A-1-a, SaGr, gry, Moist, Rec. = 1.5 ft, Very hard drilling. Lots of Broken Rock (Cobbles).	60-74-78 (R)	9.1	58.4	29.4	12.2		
90		Field Note:, Sleaved down to 3.5" casing and continued mud drilling. Advanced casing and cleaned out., Appears to be cobbles with gravel.							
		Visual Description, SiGrSa with lots of broken rock pieces, gry, Moist, Rec. = 0.3 ft, Insufficient sample for testing.	R@3.5"						
		Field Note:, Boulder							
		Field Note:, SiGrSa with lots of broken rock pieces, gry, Moist, Rec. = 0.5 ft, Insufficient sample for testing.	R@6.0"						
100		A-1-a, SaGr, gry, Moist, Rec. = 0.3 ft, Mostly Broken Rock (Cobbles).	R@3.5"	13.0	64.6	32.3	3.1		
		Hole stopped @ 102.3 ft							

Notes:
1. Stratification lines represent approximate boundary between material types. Transition may be gradual.
2. N Values have not been corrected for hammer energy. C_E is the hammer energy correction factor.
3. Water level readings have been made at times and under conditions stated. Fluctuations may occur due to other factors than those present at the time measurements were made.

BORING LOG 2 NEW HAVEN BRF 0183(1).GPJ VERMONT AOT.GDT 12/11/13

STATE OF VERMONT
AGENCY OF TRANSPORTATION
MATERIALS & RESEARCH SECTION
SUBSURFACE INFORMATION

BORING LOG

NEW HAVEN
BRF 0183(1)
TH-2 BR-10

Boring No.: **B-102**
Page No.: 1 of 2
Pin No.: 10J070
Checked By: CCB

Boring Crew: PORTER, GARROW, CROWLER
Date Started: 5/09/12 Date Finished: 5/11/12
VTSPG NAD83: N 569559.85 ft E 1469952.00 ft
Station: 504+05 Offset: 5.70
Ground Elevation: 250.3 ft

	Casing	Sampler
Type:	WB	SS & TUBE
I.D.:	4 in	1.5 in
Hammer Wt:	N.A.	140 lb.
Hammer Fall:	N.A.	30 in.
Hammer/Rod Type:	Auto/AWJ	
Rig:	CME 55 TRACK	C_E = 1.46

Groundwater Observations		
Date	Depth (ft)	Notes

Depth (ft)	Strata (1)	CLASSIFICATION OF MATERIALS (Description)	Blows/6" (N Value)	Moisture Content %	Gravel %	Sand %	Fines %	LL %	PI %
		Asphalt Pavement, 0.0 ft - 0.2 ft, On the Bridge deck.							
		Concrete, 0.2 ft - 0.8 ft, On the Bridge deck.							
5									
		River Water, measured from top of deck pavement, 8.0 ft - 15.5 ft							
10									
15									
		Field Note:, NXDC, Gr Sa							
		A-7-6, Cl, gry, Moist, Rec. = 0.7 ft, Roller Coned ahead.	16-6-2-1 (8)	71.4	1.4	3.2	95.4	78	50
20									
25									
		Visual Description:, Cl, gry, Moist, Rec. = 1.7 ft, Material similar as 37'-39'. Roller Coned ahead.	WH-WH-WH-WH	69.9					
30									
35									
		A-7-6, Cl, gry, Moist, Rec. = 1.3 ft, Roller Coned ahead.	WH-WH-WH-WH	54.5		0.7	99.3	50	30
40									
		A-7-6, Cl, gry, Moist, Rec. = 2.0 ft, Weight of Rod from 42.0-43.5 feet. Material from Trixal "A" sample.		57.8		0.4	99.6	54	32
		A-7-6, Cl, gry, MTW, Material from Triaxial "C" sample.		77.1		0.4	99.6	73	44
45									
		Visual Description:, Cl, gry, Wet, Rec. = 1.5 ft, Material similar as 37'-39'. Roller Coned ahead. Very sloppy sample.	WR-WR-WR-WR	32.4					

Notes:
1. Stratification lines represent approximate boundary between material types. Transition may be gradual.
2. N Values have not been corrected for hammer energy. C_E is the hammer energy correction factor.
3. Water level readings have been made at times and under conditions stated. Fluctuations may occur due to other factors than those present at the time measurements were made.

BORING LOG 2 NEW HAVEN BRF 0183(1).GPJ VERMONT AOT.GDT 12/11/13

PARSONS BRINCKERHOFF
650 ELM STREET
MANCHESTER, NH 03101

PROJECT NAME: NEW HAVEN
PROJECT NUMBER: BRF 0183 (1)

FILE NAME: z10j070bor.dgn
PROJECT LEADER: K. DONINGTON
DESIGNED BY: P. ARMANO
BORING LOG SHEET 1

PLOT DATE: 13-MARCH-2015
DRAWN BY: W. GERHOLD
CHECKED BY: R. BENJAMIN
SHEET 22 OF 66

STATE OF VERMONT
AGENCY OF TRANSPORTATION
MATERIALS & RESEARCH SECTION
SUBSURFACE INFORMATION

BORING LOG

NEW HAVEN
BRF 0183(1)
TH-2 BR-10

Boring No.: **B-102**
Page No.: 2 of 2
Pin No.: 10J070
Checked By: CCB

Boring Crew: PORTER, GARROW, CROWLER
Date Started: 5/09/12 Date Finished: 5/11/12
VTSPG NAD83: N 569559.85 ft E 1469952.00 ft
Station: 504+05 Offset: 5.70
Ground Elevation: 250.3 ft

	Casing	Sampler
Type:	WB	SS & TUBE
I.D.:	4 in	1.5 in
Hammer Wt:	N.A.	140 lb.
Hammer Fall:	N.A.	30 in.
Hammer/Rod Type:	Auto/AWJ	
Rig:	CME 55 TRACK	C_E = 1.46

Groundwater Observations

Date	Depth (ft)	Notes

Depth (ft)	Strata (1)	CLASSIFICATION OF MATERIALS (Description)	Blows/6" (N Value)	Moisture Content %	Gravel %	Sand %	Fines %	LL %	PI %
55									
		Visual Description:, Cl, gry, Wet, Rec. = 1.7 ft, Material similar as 67'-69'. Roller Coned ahead. Very sloppy sample.	WR-WR-WR-WR	29.6					
60									
65									
		A-6, SiCl, gry, Wet, Rec. = 1.5 ft, Very sloppy sample.	WR-WR-WR-WR	39.1		5.6	94.4	36	19
70									
75		Field Note:, NXDC, Material changed. (HP)							
		A-4, SaGrSi (HP), gry, Moist, Rec. = 0.5 ft, Lab Note: Sample had low Limits, if any. Insufficient sample for other testing.	6-R@3.5"	9.0	30.3	26.9	42.8		
80									
85									
		A-4, GrSaSi (HP), gry, Moist, Rec. = 0.9 ft	35-52 (R)	7.9	20.3	29.4	50.3		
90									
95									
		Field Note:, NXDC							
		Field Note:, No Recovery	42-51 (R)						
		Hole stopped @ 98.0 ft							

Notes:
1. Stratification lines represent approximate boundary between material types. Transition may be gradual.
2. N Values have not been corrected for hammer energy. C_E is the hammer energy correction factor.
3. Water level readings have been made at times and under conditions stated. Fluctuations may occur due to other factors than those present at the time measurements were made.

BORING LOG 2 NEW HAVEN BRF 0183(1).GPJ VERMONT AOT.GDT 12/11/13

STATE OF VERMONT
AGENCY OF TRANSPORTATION
MATERIALS & RESEARCH SECTION
SUBSURFACE INFORMATION

BORING LOG

NEW HAVEN
BRF 0183(1)
TH-2 BR-10

Boring No.: **B-103**
Page No.: 1 of 2
Pin No.: 10J070
Checked By: CCB

Boring Crew: PORTER, DAVISON
Date Started: 4/30/12 Date Finished: 5/04/12
VTSPG NAD83: N 569670.33 ft E 1470011.41 ft
Station: 505+25 Offset: 31.80
Ground Elevation: 259.7 ft

	Casing	Sampler
Type:	WB	SS
I.D.:	4 in	1.5 in
Hammer Wt:	N.A.	140 lb.
Hammer Fall:	N.A.	30 in.
Hammer/Rod Type:	Auto/AWJ	
Rig:	CME 55 TRACK	C_E = 1.46

Groundwater Observations

Date	Depth (ft)	Notes
05/04/12	5.1	Above Ground Level

Depth (ft)	Strata (1)	CLASSIFICATION OF MATERIALS (Description)	Blows/6" (N Value)	Moisture Content %	Gravel %	Sand %	Fines %	LL %	PI %
		A-2-4, SiSa, brn, Moist, Rec. = 0.4 ft	WH-WH-WH-1	24.6	0.8	64.3	34.9		
		A-4, SiSa, brn, Moist, Rec. = 1.3 ft	(WH)	17.9	4.8	57.4	37.8		
		A-4, SiSa, brn, Moist, Rec. = 2.0 ft	WH-1-1-2 (2)	27.6		53.4	46.6		
		A-4, SaSi with small pieces of Wood, brn-gry, Moist, Rec. = 1.8 ft	2-2-2-3 (4)	40.4		38.9	61.1		
		A-2-4, SiSa with lots of small pieces of Wood, brn-gry, Moist, Rec. = 0.9 ft	1-1-2-1 (3)	45.9	0.8	77.6	21.6		
10		Visual Description:, Wood, Rec. = 1.1 ft	1-5-6-7 (11)						
		A-1-b, GrSa with chunks of Wood, gry, Moist, Rec. = 0.7 ft	1-1-1-3 (2)	43.3	29.9	58.0	12.1		
		A-1-b, GrSa, brn, Moist, Rec. = 0.6 ft	1-1-1-1 (2)	18.5	39.6	53.2	7.2		
		A-7-6, Cl, gry, Moist		58.7	0.1	1.3	98.6	63	38
20		Visual Description:, Cl, gry, Moist, Rec. = 2.0 ft, Material similar as 27'-29'.	WH-WH-WH-WH	70.2					
30		A-7-6, Cl, gry, Wet, Rec. = 2.0 ft, Very wet & sloppy sample.	WR-WR-WR-WR	79.6		0.5	99.5	69	42
40		Visual Description:, Cl, gry, Moist, Rec. = 1.5 ft, Material similar as 47'-49'.	WR-WR-WR-WR	74.0					
50		A-7-6, Cl, gry, Moist, Rec. = 2.0 ft	WR-WR-WR-WR	69.4		0.3	99.7	67	41
		Visual Description:, Cl, gry, Moist, Rec. = 2.0 ft, Material similar as 47'-49'.	WR-WR-WR-WR	50.9					

Bottom of Pile Cap
Abutment 2
Elev. = 253.47

Pile Tip
Abutment 2
Elev. = 175.47

Notes:
1. Stratification lines represent approximate boundary between material types. Transition may be gradual.
2. N Values have not been corrected for hammer energy. C_E is the hammer energy correction factor.
3. Water level readings have been made at times and under conditions stated. Fluctuations may occur due to other factors than those present at the time measurements were made.

BORING LOG 2 NEW HAVEN BRF 0183(1).GPJ VERMONT AOT.GDT 12/11/13

STATE OF VERMONT
AGENCY OF TRANSPORTATION
MATERIALS & RESEARCH SECTION
SUBSURFACE INFORMATION

BORING LOG

NEW HAVEN
BRF 0183(1)
TH-2 BR-10

Boring No.: **B-103**
Page No.: 2 of 2
Pin No.: 10J070
Checked By: CCB

Boring Crew: PORTER, DAVISON
Date Started: 4/30/12 Date Finished: 5/04/12
VTSPG NAD83: N 569670.33 ft E 1470011.41 ft
Station: 505+25 Offset: 31.80
Ground Elevation: 259.7 ft

	Casing	Sampler
Type:	WB	SS
I.D.:	4 in	1.5 in
Hammer Wt:	N.A.	140 lb.
Hammer Fall:	N.A.	30 in.
Hammer/Rod Type:	Auto/AWJ	
Rig:	CME 55 TRACK	C_E = 1.46

Groundwater Observations

Date	Depth (ft)	Notes
05/04/12	5.1	Above Ground Level

Depth (ft)	Strata (1)	CLASSIFICATION OF MATERIALS (Description)	Blows/6" (N Value)	Moisture Content %	Gravel %	Sand %	Fines %	LL %	PI %
70		A-4, ClSi, gry, Moist, Rec. = 2.0 ft	WR-WR-WR-WR	29.6		5.7	94.3	23	8
		Field Note:, This area drills like small layers of sand							
80		A-2-4, SiGrSa, gry, Moist, Rec. = 0.4 ft, Lab Note: (HP)	51 (R)	12.8	30.2	40.9	28.9		
		Field Note:, Very hard drilling. Drills like rock., Water started flowing out of casing at 82.0 feet. Inserted 3 inch casing to advance. Some Cobbles were noticed during clean out.							
90		A-4, SaSi, gry, Moist, Rec. = 1.5 ft, Lab Note: (HP)	21-41-50 (R)	8.8	19.8	30.2	50.0		
		A-4, SaGrSi, grn-brn, Moist, Rec. = 1.8 ft, Lab Note: (HP)	24-37-37-50 (74)	7.7	29.7	26.6	43.7	17	5
100		Visual Description:, SaGrSi, brn-gry, Moist, Rec. = 1.5 ft, Material similar as 92'-94'. Lab Note: (HP)	42-42-50 (R)	8.3					
110		Visual Description:, GrSaSi, gry, Moist, Rec. = 1.8 ft, Material similar as 117'-119'. Lab Note: (HP)	13-20-31-36 (51)	8.7					
		A-4, GrSaSi, gry, Moist, Rec. = 2.0 ft	23-21-30-42 (51)	7.6	25.7	36.8	37.5		
		Hole stopped @ 119.0 ft							

Notes:
1. Stratification lines represent approximate boundary between material types. Transition may be gradual.
2. N Values have not been corrected for hammer energy. C_E is the hammer energy correction factor.
3. Water level readings have been made at times and under conditions stated. Fluctuations may occur due to other factors than those present at the time measurements were made.

BORING LOG 2 NEW HAVEN BRF 0183(1).GPJ VERMONT AOT.GDT 12/11/13

PARSONS BRINCKERHOFF
650 ELM STREET
MANCHESTER, NH 03101

PROJECT NAME: NEW HAVEN
PROJECT NUMBER: BRF 0183 (1)

FILE NAME: z10j070bor.dgn
PROJECT LEADER: K. DONINGTON
DESIGNED BY: P. ARMANO
BORING LOG SHEET 2

PLOT DATE: 13-MARCH-2015
DRAWN BY: W. GERHOLD
CHECKED BY: R. BENJAMIN
SHEET 23 OF 66

STATE OF VERMONT
AGENCY OF TRANSPORTATION
MATERIALS & RESEARCH SECTION
SUBSURFACE INFORMATION

BORING LOG

NEW HAVEN
BRF 0183(1)
TH-2 BR-10

Boring No.: **B-104**
Page No.: 1 of 2
Pin No.: 10J070
Checked By: CEE

Boring Crew: JUDKINS, DAIGNEAULT, GARROW
Date Started: 9/24/13 Date Finished: 9/30/13
VTSPG NAD83: N 569535.07 ft E 1469941.15 ft
Station: 503+78 Offset: 5.00
Ground Elevation: 249.0 ft

	Casing	Sampler
Type:	WB	SS & TUBE
I.D.:	4 in	1.5 in
Hammer Wt:	N.A.	140 lb.
Hammer Fall:	N.A.	30 in.
Hammer/Rod Type:	Auto/AWJ	
Rig:	CME 55 TRACK	C_E = 1.46

Groundwater Observations

Date	Depth (ft)	Notes

Depth (ft)	Strata (1)	CLASSIFICATION OF MATERIALS (Description)	Blows/6" (N Value)	Moisture Content %	Gravel %	Sand %	Fines %	LL %	PI %
		Visual Description:, SaGr, brn, MTW, Rec. = 0.2 ft, Insufficient sample for testing.	8-2-2-1 (4)	10.0					
10		A-7-6, Cl, gry, Wet, Rec. = 2.0 ft	1-2-WH-WH (2)	67.3		1.0	99.0	61	36
		Cl, gry, Wet, Rec. = 2.0 ft, 14.5 ft - 16.5 ft, Shelby Tube							
		Cl, gry, Wet, Rec. = 2.0 ft, 16.5 ft - 18.5 ft, Shelby Tube							
20		A-7-6, Cl, gry, MTW, Rec. = 2.0 ft	WR-WR-WR-WH (WR)	67.9		0.1	99.9	65	37
30		A-6, SiCl, gry, Wet, Rec. = 2.0 ft	WR-WR-WR-WR (WR)	33.1		1.1	98.9	32	15
40		A-7-6, Cl, gry, MTW, Rec. = 2.0 ft	WR-WR-WR-WR (WR)	57.6		0.2	99.8	61	35
50		SiCl, gry, MTW, Rec. = 2.0 ft, 48.5 ft - 50.5 ft, Shelby Tube							
		A-6, SiCl, gry, Wet, Rec. = 0.3 ft, Lost sample in hole. Bagged what remained in tube.		34.3		4.6	95.4	32	13
60		Field Note:, No Recovery, 10 blows with no movement.	19-R@5.0"						

Notes:
1. Stratification lines represent approximate boundary between material types. Transition may be gradual.
2. N Values have not been corrected for hammer energy. C_E is the hammer energy correction factor.
3. Water level readings have been made at times and under conditions stated. Fluctuations may occur due to other factors than those present at the time measurements were made.

Bottom of Drilled Shaft
Elev. = 130.00

BORING LOG 2 NEW HAVEN BRF 0183(1).GPJ VERMONT AOT.GDT 12/11/13

STATE OF VERMONT
AGENCY OF TRANSPORTATION
MATERIALS & RESEARCH SECTION
SUBSURFACE INFORMATION

BORING LOG

NEW HAVEN
BRF 0183(1)
TH-2 BR-10

Boring No.: **B-104**
Page No.: 2 of 2
Pin No.: 10J070
Checked By: CEE

Boring Crew: JUDKINS, DAIGNEAULT, GARROW
Date Started: 9/24/13 Date Finished: 9/30/13
VTSPG NAD83: N 569535.07 ft E 1469941.15 ft
Station: 503+78 Offset: 5.00
Ground Elevation: 249.0 ft

	Casing	Sampler
Type:	WB	SS & TUBE
I.D.:	4 in	1.5 in
Hammer Wt:	N.A.	140 lb.
Hammer Fall:	N.A.	30 in.
Hammer/Rod Type:	Auto/AWJ	
Rig:	CME 55 TRACK	C_E = 1.46

Groundwater Observations

Date	Depth (ft)	Notes

Depth (ft)	Strata (1)	CLASSIFICATION OF MATERIALS (Description)	Blows/6" (N Value)	Moisture Content %	Gravel %	Sand %	Fines %	LL %	PI %
70		Field Note:, No Recovery, Extremely hard drilling.	R@3.5"						
		Field Note:, Pulled casing & replaced bit., Re-drilled same hole							
80		Field Note:, Cobbles							
		Field Note:, No Recovery	18-42-R@3.5" (R)						
90		A-4, SaSi, gry, Moist, Rec. = 1.6 ft	8-28-34-R@3.5" (62)	8.8	16.8	29.0	54.2	17	4
100		A-4, GrSaSi, gry, Moist, Rec. = 0.6 ft	27-47-R@5.0" (R)	8.7	21.3	30.9	47.8	18	5
110		A-2-4, GrSiSa, gry, Moist, Rec. = 0.3 ft	26-R@6.0" (R)	11.1	21.2	43.4	35.4		
120		Field Note:, No Recovery, Bit worn out. Attempted to pull casing again.	10-34-R@6.0" (R)						
		Hole stopped @ 121.5 ft Casing broke off.							
130		Remarks: 1. Bit was worn out at 74.0 feet, so the driller's pulled the casing and replaced the bit. 2. Bit was worn out again at 121.5 feet, so the driller's attempted to pull the casing again. 3. Casing broke off at 100 feet below ground surface. 20 feet of casing remains in the ground. 4. Top of ground surface was 16.5 feet below the top of the bridge deck.							

Notes:
1. Stratification lines represent approximate boundary between material types. Transition may be gradual.
2. N Values have not been corrected for hammer energy. C_E is the hammer energy correction factor.
3. Water level readings have been made at times and under conditions stated. Fluctuations may occur due to other factors than those present at the time measurements were made.

BORING LOG 2 NEW HAVEN BRF 0183(1).GPJ VERMONT AOT.GDT 12/11/13

PROJECT NAME: NEW HAVEN
PROJECT NUMBER: BRF 0183 (1)

PARSONS BRINCKERHOFF
650 ELM STREET
MANCHESTER, NH 03101

FILE NAME: z10j070bor.dgn
PROJECT LEADER: K. DONINGTON
DESIGNED BY: P. ARMANO
BORING LOG SHEET 3

PLOT DATE: 13-MARCH-2015
DRAWN BY: W. GERHOLD
CHECKED BY: R. BENJAMIN
SHEET 24 OF 66

STATE OF VERMONT
AGENCY OF TRANSPORTATION
MATERIALS & RESEARCH SECTION
SUBSURFACE INFORMATION

BORING LOG

NEW HAVEN
BRF 0183(1)
TH-2 BR-10

Boring No.: **B-104A**
Page No.: 1 of 2
Pin No.: 10J070
Checked By: CEE

Boring Crew: DAIGNEAULT, GARROW
Date Started: 10/01/13 Date Finished: 10/07/13
VTSPG NAD83: N 569539.09 ft E 1469943.07 ft
Station: 503+82 Offset: 5.00
Ground Elevation: 249.0 ft

	Casing	Sampler
Type:	WB	SS
I.D.:	4 in	1.5 in
Hammer Wt:	N.A.	140 lb.
Hammer Fall:	N.A.	30 in.
Hammer/Rod Type:	Auto/AWJ	
Rig:	CME 55 TRACK	C_E = 1.46

Groundwater Observations

Date	Depth (ft)	Notes

Depth (ft)	Strata (1)	CLASSIFICATION OF MATERIALS (Description)	Blows/6" (N Value)	Moisture Content %	Gravel %	Sand %	Fines %
		Field Note:, Advanced casing to 60 ft., Appears to be Silty Clay.					
10							
20							
30							
40							
50							
60							
		Field Note:, Advanced & cleaned out casing., Appears to be Gravely Silty Sand.					
70		Field Note:, Advanced & cleaned out casing., Appears to be Gravely Silty Sand.					
		Field Note:, Advanced & cleaned out casing., Appears to be Cobbles.					
80							
		Field Note:, Advanced & cleaned out casing., Appears to be Gravely Silty Sand.					
		Field Note:, Advanced & cleaned out casing., Appears to be Gravel & Cobbles.					

Notes:
1. Stratification lines represent approximate boundary between material types. Transition may be gradual.
2. N Values have not been corrected for hammer energy. C_E is the hammer energy correction factor.
3. Water level readings have been made at times and under conditions stated. Fluctuations may occur due to other factors than those present at the time measurements were made.

BORING LOG 2 NEW HAVEN BRF 0183(1).GPJ VERMONT AOT.GDT 12/11/13

STATE OF VERMONT
AGENCY OF TRANSPORTATION
MATERIALS & RESEARCH SECTION
SUBSURFACE INFORMATION

BORING LOG

NEW HAVEN
BRF 0183(1)
TH-2 BR-10

Boring No.: **B-104A**
Page No.: 2 of 2
Pin No.: 10J070
Checked By: CEE

Boring Crew: DAIGNEAULT, GARROW
Date Started: 10/01/13 Date Finished: 10/07/13
VTSPG NAD83: N 569539.09 ft E 1469943.07 ft
Station: 503+82 Offset: 5.00
Ground Elevation: 249.0 ft

	Casing	Sampler
Type:	WB	SS
I.D.:	4 in	1.5 in
Hammer Wt:	N.A.	140 lb.
Hammer Fall:	N.A.	30 in.
Hammer/Rod Type:	Auto/AWJ	
Rig:	CME 55 TRACK	C_E = 1.46

Groundwater Observations

Date	Depth (ft)	Notes

Depth (ft)	Strata (1)	CLASSIFICATION OF MATERIALS (Description)	Blows/6" (N Value)	Moisture Content %	Gravel %	Sand %	Fines %
		Field Note:, Advanced & cleaned out casing., Appears to be Gravely Silty Sand.					
		Field Note:, Advanced & cleaned out casing., Appears to be Cobbles.					
		Field Note:, Bit wore out. Sleaved down to a 3 inch casing					
100							
110							
		Field Note:, Advanced & cleaned out casing., Appears to be Gravely Silty Sand.					
120							
		Field Note:, Advanced & cleaned out casing., Appears to be Gravel. Changed 3 inch casing bit at 126.0 feet. Material was very hard drilling.					
130		A-2-4, SiSaGr, gry, Moist, Rec. = 0.5 ft	23-28-36-R@2.5" (64)	10.5	45.8	28.4	25.8
140		A-4, SaSi, gry, Moist, Rec. = 0.5 ft	7-16-16-16 (32)	9.7	19.4	38.2	42.4
150		A-4, SaSi, gry, Moist, Rec. = 2.0 ft	8-10-18-36 (28)	10.5	2.9	36.4	60.7
160		A-4, SaSi, gry, Moist, Rec. = 1.0 ft	6-18-35-R@3.5" (53)	14.5	5.4	42.9	51.7
		Hole stopped @ 161.8 ft					
170							

Notes:
1. Stratification lines represent approximate boundary between material types. Transition may be gradual.
2. N Values have not been corrected for hammer energy. C_E is the hammer energy correction factor.
3. Water level readings have been made at times and under conditions stated. Fluctuations may occur due to other factors than those present at the time measurements were made.

BORING LOG 2 NEW HAVEN BRF 0183(1).GPJ VERMONT AOT.GDT 12/11/13

PARSONS BRINCKERHOFF
650 ELM STREET
MANCHESTER, NH 03101

PROJECT NAME: NEW HAVEN
PROJECT NUMBER: BRF 0183 (1)

FILE NAME: z10j070bor.dgn
PROJECT LEADER: K. DONINGTON
DESIGNED BY: P. ARMANO
BORING LOG SHEET 4

PLOT DATE: 13-MARCH-2015
DRAWN BY: W. GERHOLD
CHECKED BY: R. BENJAMIN
SHEET 25 OF 66

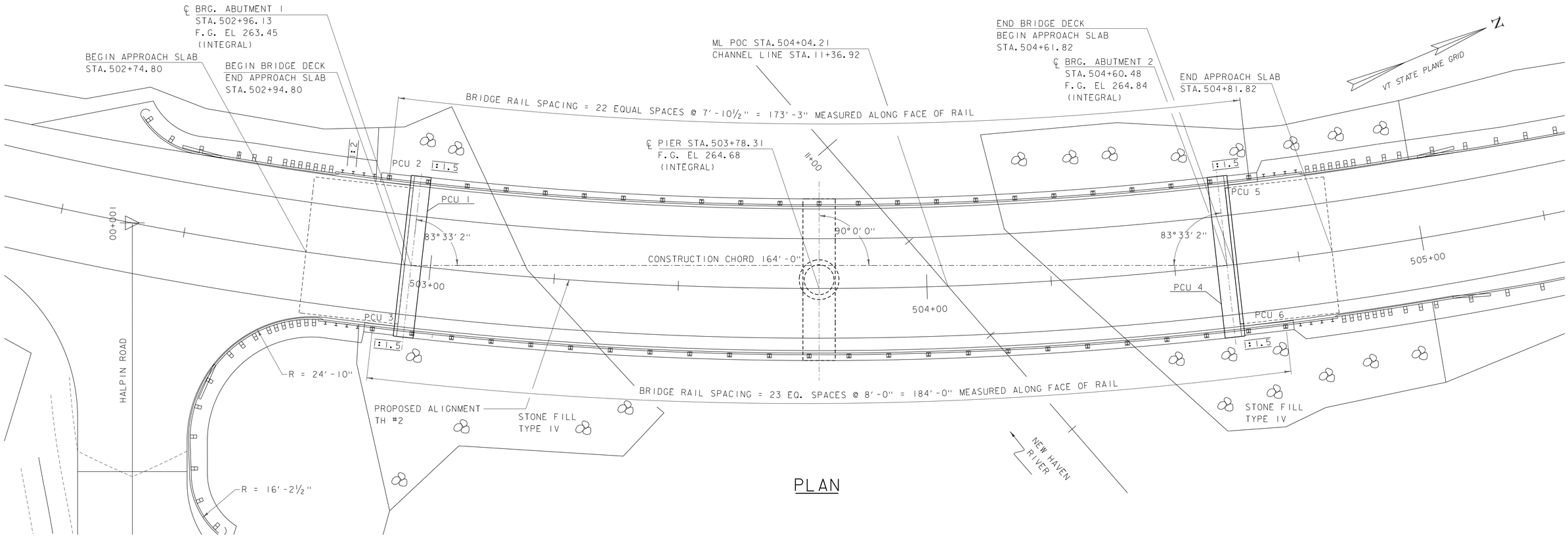

PLAN

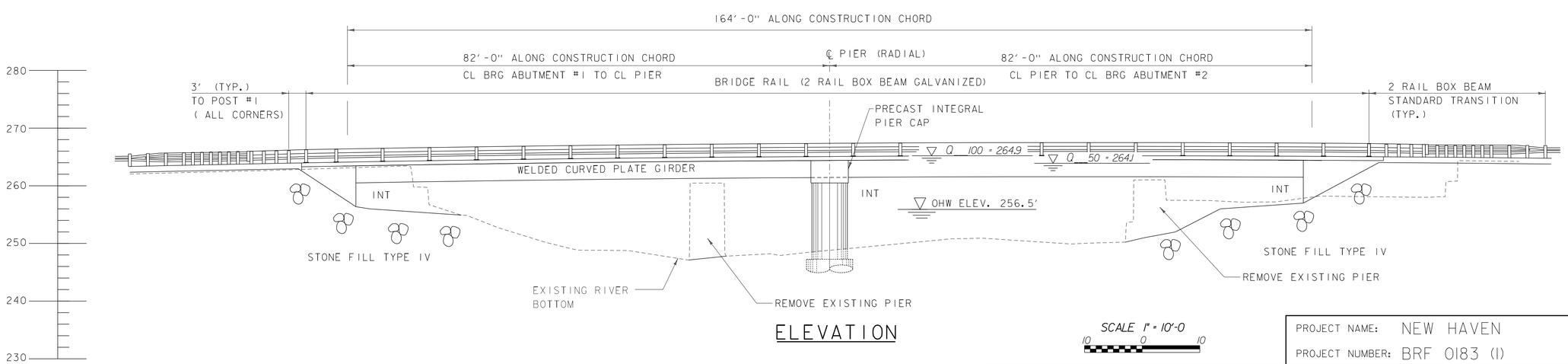

ELEVATION

SCALE 1" = 10'-0
10 0 10

PARSONS BRINCKERHOFF
650 ELM STREET
MANCHESTER, NH 03101

PROJECT NAME:	NEW HAVEN
PROJECT NUMBER:	BRF 0183 (1)

FILE NAME: z10j070Spe.dgn		PLOT DATE:	13-MARCH-2015
PROJECT LEADER:	K. DONINGTON	DRAWN BY:	W. GERHOLD
DESIGNED BY:	P. ARMANO	CHECKED BY:	A. STOCKIN
PLAN AND ELEVATION SHEET		SHEET 26	OF 66

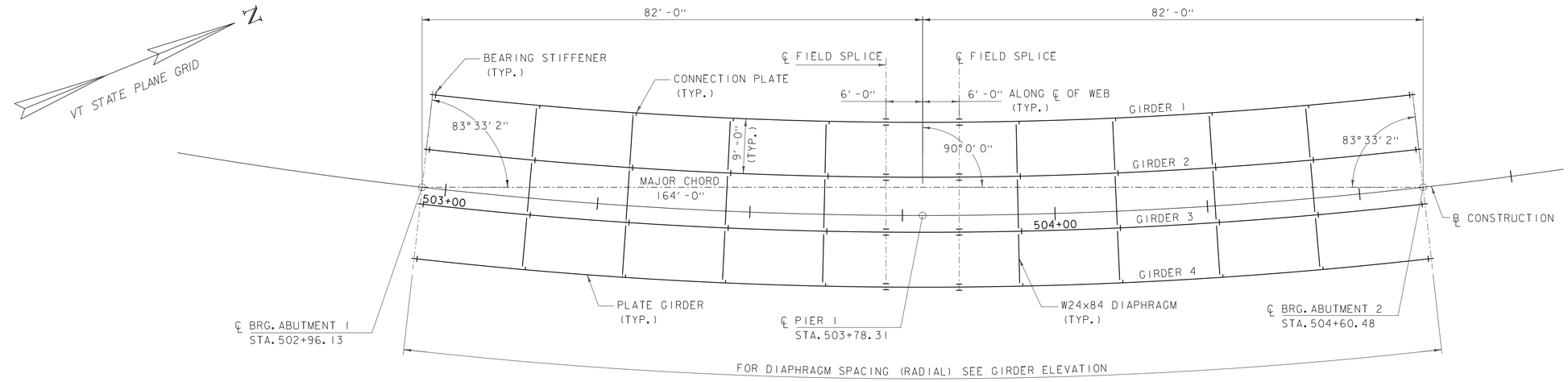

FRAMING PLAN

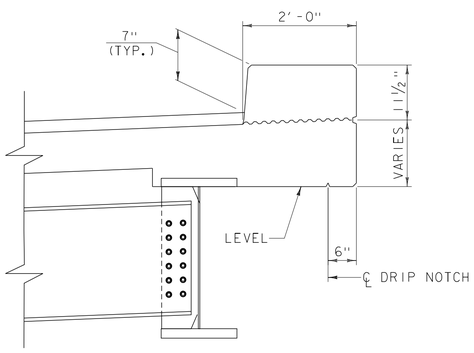

FASCIA DETAIL

SCALE: ¾"=1'-0"

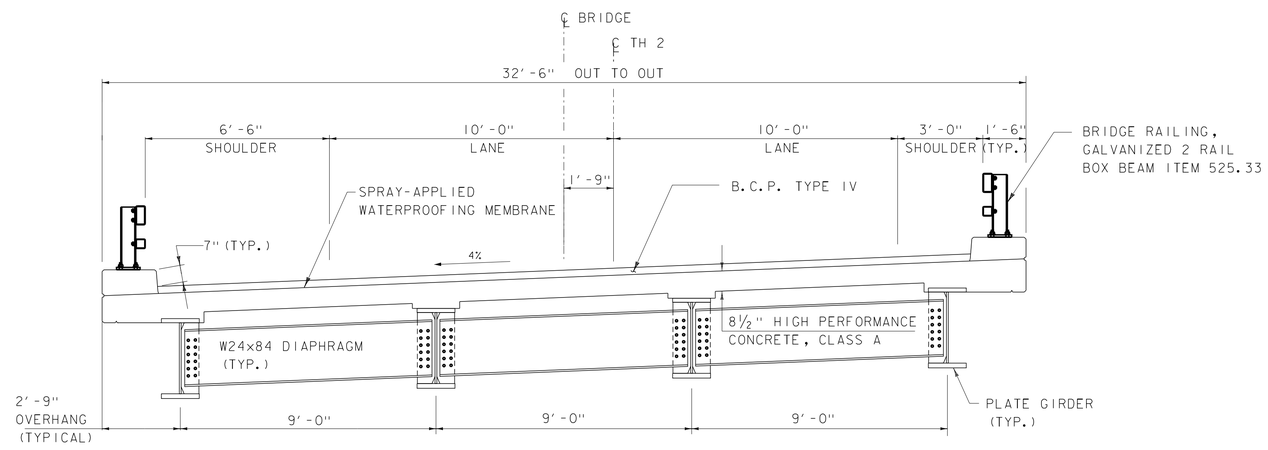

BRIDGE TYPICAL SECTION

SCALE: ⅜" = 1'-0"

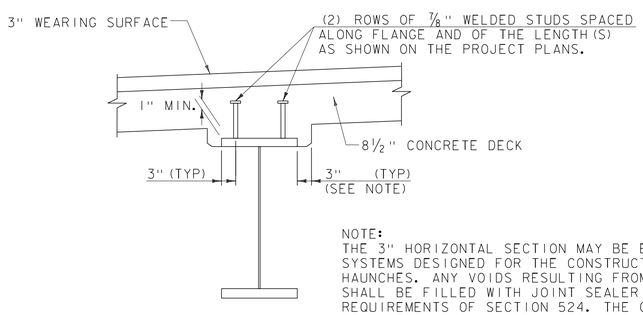

NOTE:
THE 3" HORIZONTAL SECTION MAY BE ELIMINATED FOR FORMING SYSTEMS DESIGNED FOR THE CONSTRUCTION OF VERTICAL HAUNCHES. ANY VOIDS RESULTING FROM FORMING SYSTEM ELEMENTS SHALL BE FILLED WITH JOINT SEALER, POLYURETHANE MEETING THE REQUIREMENTS OF SECTION 524. THE COST OF THE JOINT SEALER, POLYURETHANE SHALL BE INCIDENTAL TO THE ADJACENT CONCRETE.

HAUNCH DETAIL

SCALE: ¾"=1'-0"

SCALE 1" = 10'-0
10 0 10

PARSONS BRINCKERHOFF
650 ELM STREET
MANCHESTER, NH 03101

PROJECT NAME: NEW HAVEN	
PROJECT NUMBER: BRF 0183 (1)	
FILE NAME: z10j070sup.dgn	PLOT DATE: 13-MARCH-2015
PROJECT LEADER: G.K.DONINGTON	DRAWN BY: W GERHOLD
DESIGNED BY: R. GAUDREAU	CHECKED BY: H. RIAD
FRAMING PLAN	SHEET 27 OF 66

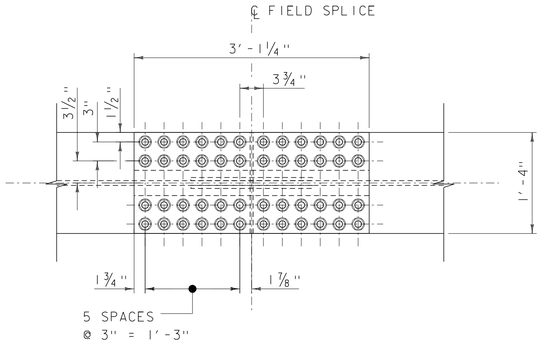

PLAN - FIELD SPLICE TOP FLANGE

SCALE: 1" = 1'-0"

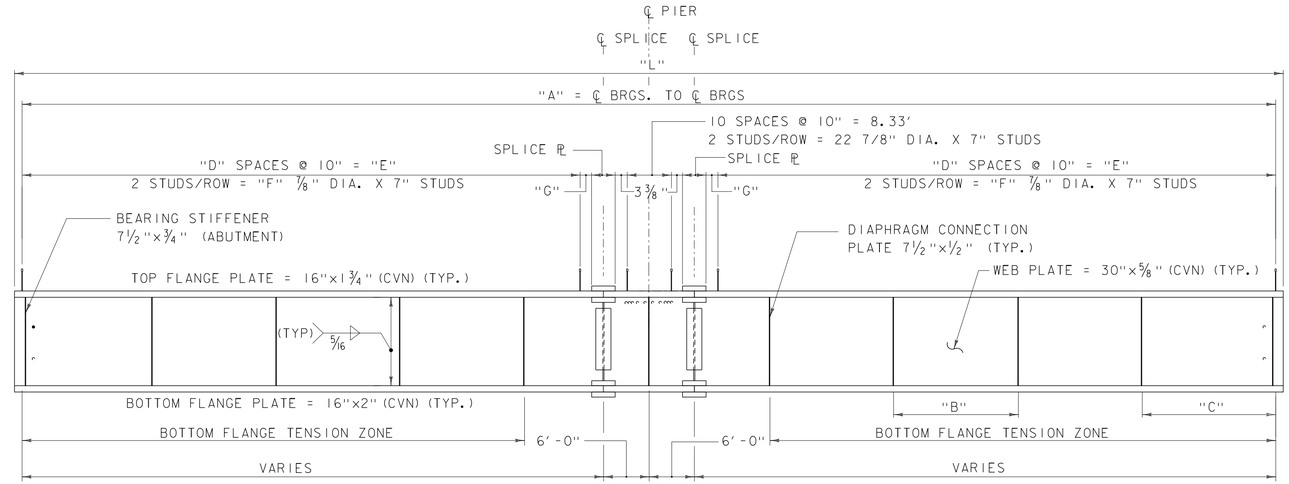

TYPICAL GIRDER ELEVATION

SCALE: 1"=10' HORIZ. 1"=2' VERT.

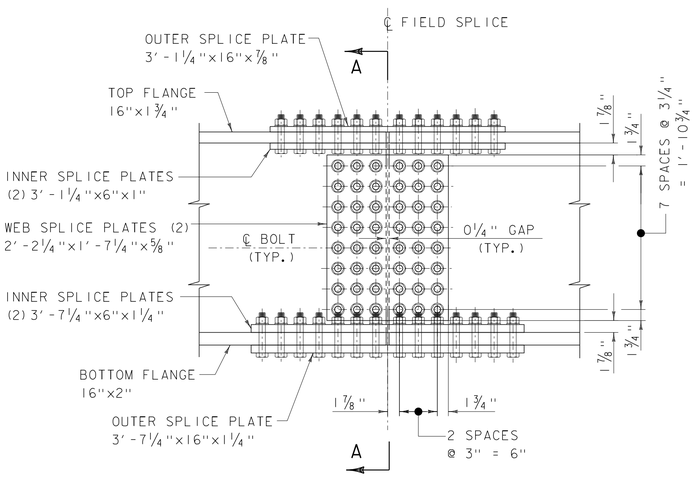

ELEVATION - FIELD SPLICE

SCALE: 1" = 1'-0"

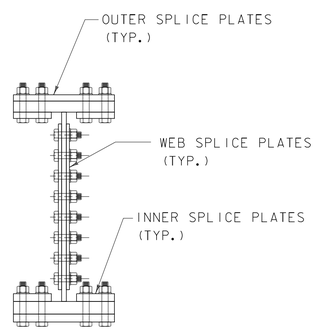

SECTION A-A

SCALE: 1" = 1'-0"

GIRDER #	"L" (2)	RADIUS (3)	"A" (2)	"B" (2)	"C" (2)(4)	"D"	"E"	"F"	"G"
1	161.75	714.75	160.92	16.092	15.675	87	72.5'	176	4⅞"
2	163.78	723.75	162.94	16.294	15.878	88	73.33'	178	7"
3	165.80	732.75	164.97	16.497	16.080	89	74.14'	180	9 3/16"
4	167.83	741.75	167.00	16.699	16.283	91	75.83'	184	1⅜"

(1) ALL UNITS IN FEET
(2) DIMENSIONS MEASURED ALONG ℄ OF GIRDER WEBS
(3) MEASURED TO ℄ OF GIRDER WEBS
(4) TO ℄ BEARING STIFFENER

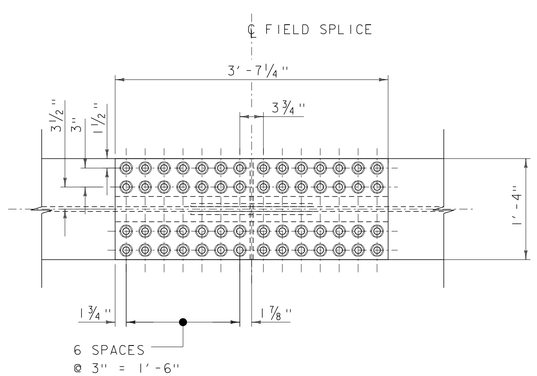

PLAN - FIELD SPLICE BOTTOM FLANGE

SCALE: 1" = 1'-0"

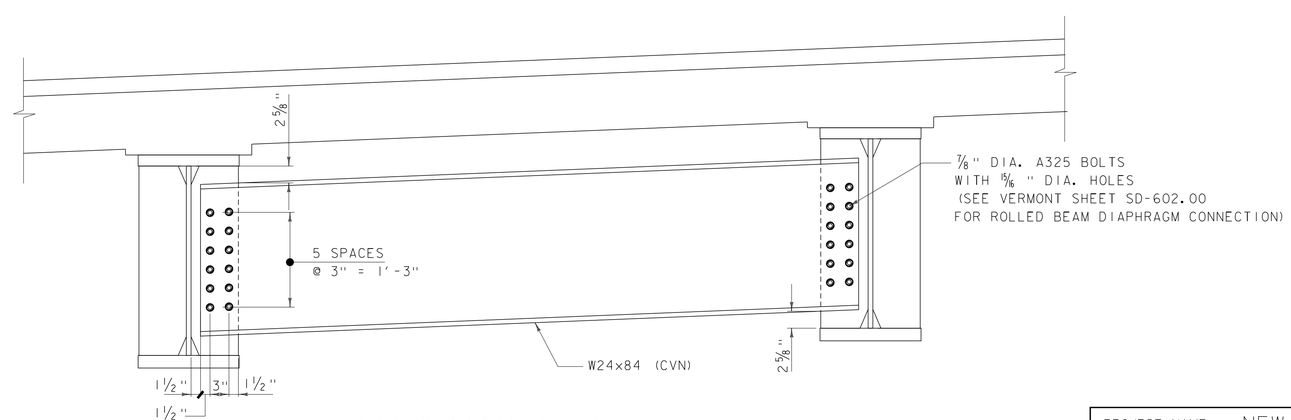

DIAPHRAGM DETAIL

SCALE: 1" = 1'-0"

PROJECT NAME: NEW HAVEN
PROJECT NUMBER: BRF 0183 (1)

PARSONS BRINCKERHOFF
650 ELM STREET
MANCHESTER, NH 03101

FILE NAME: z10j070sup5.dgn
PROJECT LEADER: G.K.DONINGTON
DESIGNED BY: B. HOLSAPPLE
GIRDER DETAILS

PLOT DATE: 13-MARCH-2015
DRAWN BY: W GERHOLD
CHECKED BY: H. RIAD
SHEET 28 OF 66

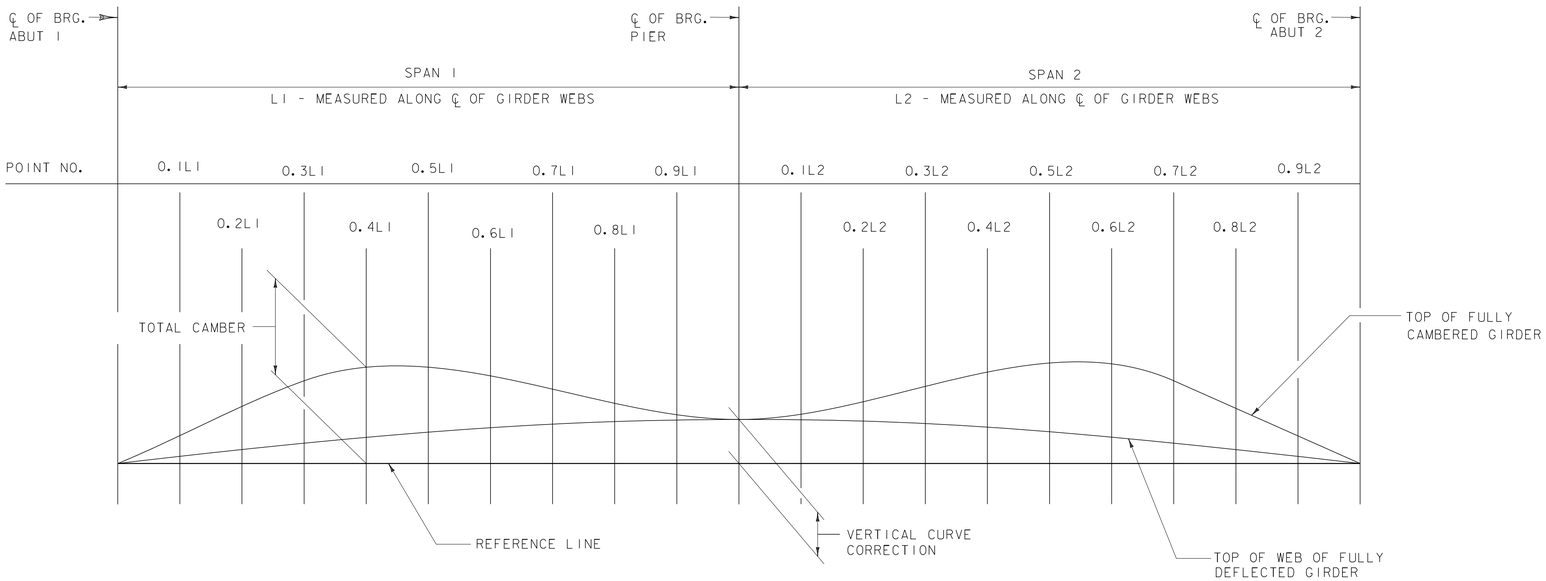

CAMBER DIAGRAM - CONTINUOUS SPAN

NOT TO SCALE

Camber Table		C.L. BRG. Abut. 1	0.1 L_1	0.2 L_1	0.3 L_1	0.4 L_1	0.5 L_1	0.6 L_1	0.7 L_1	0.8 L_1	0.9 L_1	C.L. Pier	0.1 L_2	0.2 L_2	0.3 L_2	0.4 L_2	0.5 L_2	0.6 L_2	0.7 L_2	0.8 L_2	0.9 L_2	C.L. BRG. Abut. 2
Girder 1	1. Steel DL Deflection	0.00	-0.10	-0.18	-0.24	-0.27	-0.27	-0.24	-0.19	-0.13	-0.08	-0.06	-0.08	-0.13	-0.18	-0.23	-0.26	-0.26	-0.23	-0.18	-0.09	0.00
	2. Concrete DL Deflection	0.00	-0.25	-0.45	-0.60	-0.66	-0.64	-0.55	-0.40	-0.24	-0.10	-0.04	-0.09	-0.23	-0.39	-0.53	-0.62	-0.64	-0.58	-0.44	-0.24	0.00
	3. Superimposed DL Deflection	0.00	-0.06	-0.12	-0.15	-0.17	-0.16	-0.14	-0.09	-0.04	0.00	0.02	0.00	-0.04	-0.08	-0.13	-0.15	-0.16	-0.14	-0.10	-0.05	0.00
	4. Vertical Curve	0.00	1.23	2.33	3.30	4.14	4.85	5.43	5.89	6.21	6.40	6.47	6.40	6.21	5.89	5.43	4.85	4.14	3.30	2.33	1.23	0.00
	Total Deflection	0.00	-0.40	-0.75	-0.99	-1.10	-1.07	-0.92	-0.69	-0.41	-0.18	-0.07	-0.17	-0.39	-0.65	-0.89	-1.03	-1.06	-0.95	-0.72	-0.39	0.00
	Total (1+2+3+4)	0.00	1.63	3.08	4.29	5.24	5.92	6.36	6.57	6.62	6.58	6.54	6.57	6.60	6.54	6.32	5.88	5.20	4.25	3.05	1.62	0.00
Girder 2	1. Steel DL Deflection	0.00	-0.10	-0.19	-0.25	-0.28	-0.28	-0.24	-0.18	-0.12	-0.06	-0.04	-0.06	-0.11	-0.18	-0.24	-0.27	-0.28	-0.25	-0.19	-0.10	0.00
	2. Concrete DL Deflection	0.00	-0.31	-0.58	-0.76	-0.84	-0.81	-0.69	-0.50	-0.28	-0.10	-0.02	-0.09	-0.27	-0.48	-0.67	-0.79	-0.82	-0.74	-0.57	-0.31	0.00
	3. Superimposed DL Deflection	0.00	-0.06	-0.11	-0.15	-0.16	-0.16	-0.13	-0.09	-0.05	-0.01	0.01	-0.01	-0.04	-0.08	-0.12	-0.14	-0.15	-0.13	-0.10	-0.05	0.00
	4. Vertical Curve	0.00	1.23	2.33	3.30	4.14	4.85	5.43	5.89	6.21	6.40	6.47	6.40	6.21	5.89	5.43	4.85	4.14	3.30	2.33	1.23	0.00
	Total Deflection	0.00	-0.48	-0.88	-1.16	-1.28	-1.24	-1.06	-0.78	-0.45	-0.17	-0.05	-0.16	-0.42	-0.74	-1.02	-1.20	-1.24	-1.12	-0.85	-0.46	0.00
	Total (1+2+3+4)	0.00	1.71	3.21	4.46	5.42	6.10	6.50	6.66	6.66	6.58	6.51	6.56	6.63	6.63	6.46	6.06	5.38	4.42	3.18	1.69	0.00
Girder 3	1. Steel DL Deflection	0.00	-0.11	-0.20	-0.27	-0.30	-0.30	-0.26	-0.20	-0.13	-0.07	-0.04	-0.07	-0.13	-0.19	-0.25	-0.29	-0.29	-0.26	-0.20	-0.11	0.00
	2. Concrete DL Deflection	0.00	-0.33	-0.61	-0.81	-0.89	-0.87	-0.74	-0.54	-0.32	-0.12	-0.04	-0.12	-0.30	-0.52	-0.72	-0.84	-0.87	-0.79	-0.60	-0.33	0.00
	3. Superimposed DL Deflection	0.00	-0.06	-0.12	-0.16	-0.18	-0.18	-0.16	-0.12	-0.08	-0.04	-0.02	-0.04	-0.07	-0.11	-0.15	-0.17	-0.17	-0.15	-0.11	-0.05	0.00
	4. Vertical Curve	0.00	1.23	2.33	3.30	4.14	4.85	5.43	5.89	6.21	6.40	6.47	6.40	6.21	5.89	5.43	4.85	4.14	3.30	2.33	1.23	0.00
	Total Deflection	0.00	-0.51	-0.94	-1.24	-1.38	-1.34	-1.16	-0.87	-0.53	-0.24	-0.11	-0.22	-0.50	-0.83	-1.12	-1.30	-1.34	-1.20	-0.91	-0.49	0.00
	Total (1+2+3+4)	0.00	1.74	3.27	4.54	5.52	6.20	6.59	6.75	6.74	6.64	6.57	6.62	6.71	6.72	6.55	6.15	5.48	4.50	3.24	1.72	0.00
Girder 4	1. Steel DL Deflection	0.00	-0.12	-0.21	-0.28	-0.32	-0.32	-0.29	-0.23	-0.17	-0.11	-0.08	-0.11	-0.16	-0.23	-0.28	-0.31	-0.31	-0.28	-0.21	-0.11	0.00
	2. Concrete DL Deflection	0.00	-0.29	-0.54	-0.71	-0.79	-0.78	-0.68	-0.52	-0.33	-0.17	-0.10	-0.16	-0.32	-0.50	-0.66	-0.76	-0.77	-0.69	-0.53	-0.28	0.00
	3. Superimposed DL Deflection	0.00	-0.07	-0.14	-0.20	-0.23	-0.24	-0.22	-0.18	-0.13	-0.09	-0.07	-0.09	-0.13	-0.17	-0.21	-0.22	-0.21	-0.18	-0.13	-0.06	0.00
	4. Vertical Curve	0.00	1.23	2.33	3.30	4.14	4.85	5.43	5.89	6.21	6.40	6.47	6.40	6.21	5.89	5.43	4.85	4.14	3.30	2.33	1.23	0.00
	Total Deflection	0.00	-0.48	-0.89	-1.19	-1.34	-1.33	-1.18	-0.93	-0.63	-0.37	-0.25	-0.36	-0.61	-0.90	-1.15	-1.29	-1.30	-1.16	-0.87	-0.46	0.00
	Total (1+2+3+4)	0.00	1.71	3.22	4.49	5.48	6.19	6.62	6.82	6.84	6.78	6.72	6.76	6.82	6.78	6.58	6.14	5.44	4.46	3.19	1.69	0.00

Unit: inch

PROJECT NAME: NEW HAVEN
PROJECT NUMBER: BRF 0183 (1)

PARSONS BRINCKERHOFF
650 ELM STREET
MANCHESTER, NH 03101

FILE NAME: z10j070CAMB.dgn
PROJECT LEADER: G.K.DONINGTON
DESIGNED BY: R. GAUDREAU
CAMBER DIAGRAM

PLOT DATE: 13-MARCH-2015
DRAWN BY: S.BROWN
CHECKED BY: A. STOCKIN
SHEET 29 OF 66

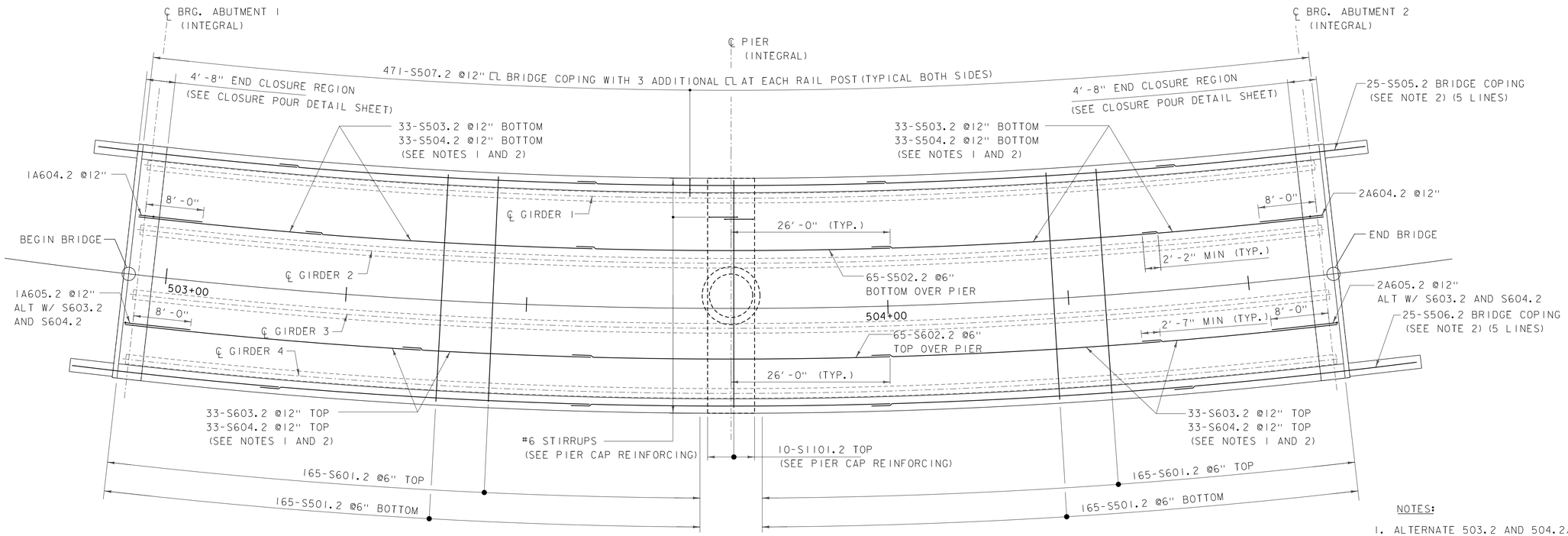

DECK REINFORCING PLAN

SCALE: 1/8" = 1'-0"

NOTES:

1. ALTERNATE 503.2 AND 504.2/603.2 AND 604.2 LONGITUDINAL TOP AND BOTTOM DECK BARS SO THAT LAP SPLICES ARE IN ALTERNATE LOCATIONS FOR EVERY OTHER ADJACENT BAR.
2. FOR #5 AND #6 LONGITUDINAL TOP AND BOTTOM DECK AND CURB BARS WHERE ACTUAL LAP LENGTHS ARE GREATER THAN THE MINIMUM SPECIFIED, SET ALL LAPS IN A SINGLE LONGITUDINAL LINE TO APPROXIMATELY EQUAL LENGTHS.

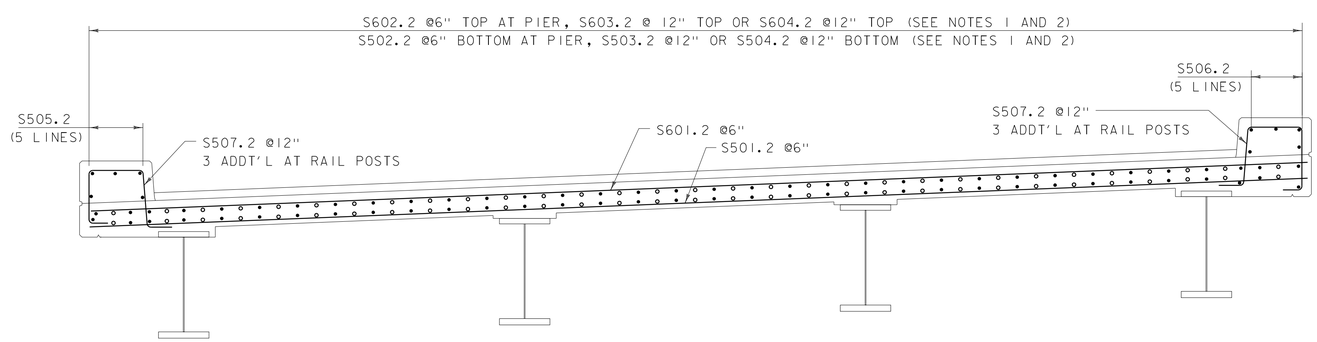

DECK REINFORCING CROSS SECTION

SCALE: 1/2" = 1'-0"

NOTE:

3" CLEAR, UNLESS OTHERWISE SPECIFIED ON THE PLANS.

PROJECT NAME: NEW HAVEN	
PROJECT NUMBER: BRF 0183 (1)	
PARSONS BRINCKERHOFF 650 ELM STREET MANCHESTER, NH 03101	
FILE NAME: z10j070sup4.dgn PROJECT LEADER: G.K.DONINGTON DESIGNED BY: J. KIM DECK REINFORCING	PLOT DATE: 13-MARCH-2015 DRAWN BY: W GERHOLD CHECKED BY: R. GAUDREAU SHEET 30 OF 66

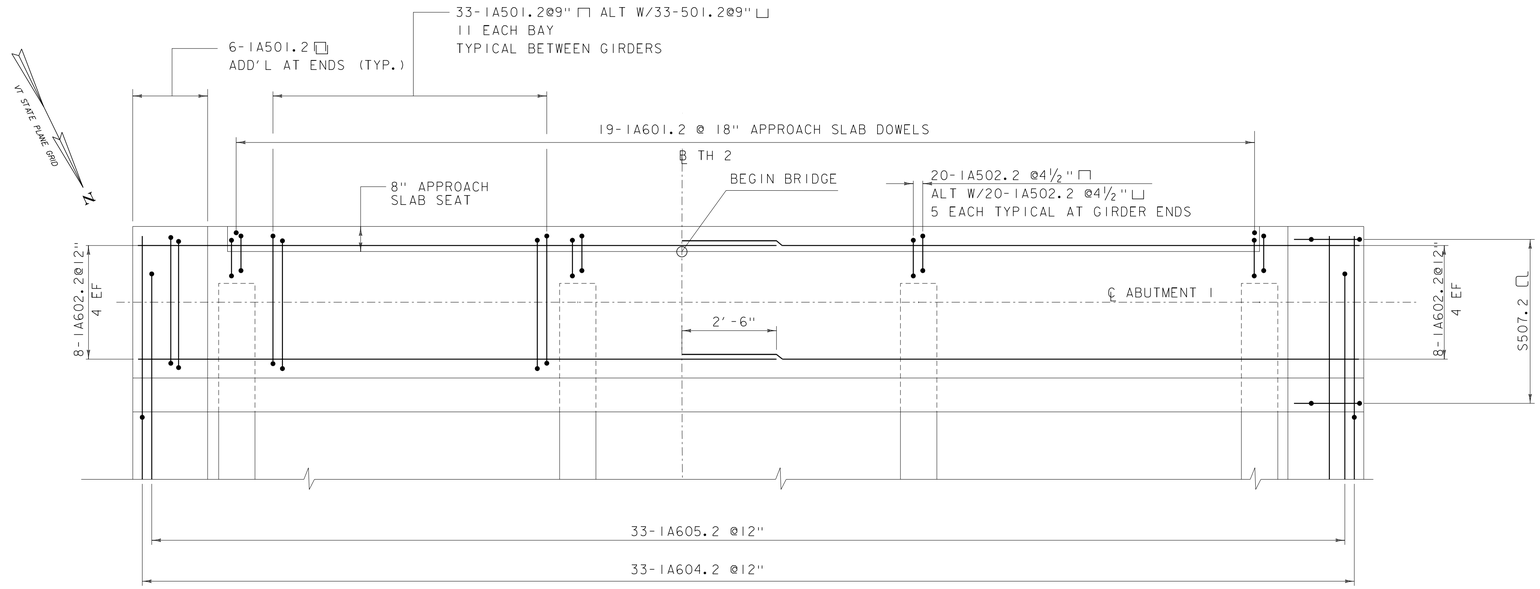

DECK CLOSURE POUR REINFORCING PLAN

(ABUTMENT 1 SHOWN, ABUTMENT 2 SIMILAR)
SCALE: ½" = 1'-0"

NOTE:
1Axxx SHOWN, DESIGNATES REINFORCING FOR CLOSURE POUR AT ABUTMENT 1
2Axxx NOT SHOWN, DESIGNATES REINFORCING FOR CLOSURE POUR AT ABUTMENT 2 (SEE REINFORCING SCHEDULE)

NOTE:

NF = NEAR FACE
FF = FAR FACE
EF = EACH FACE
△ = CUT TO FIT IN FIELD
3" CLEAR, UNLESS OTHERWISE SPECIFIED ON THE PLANS.

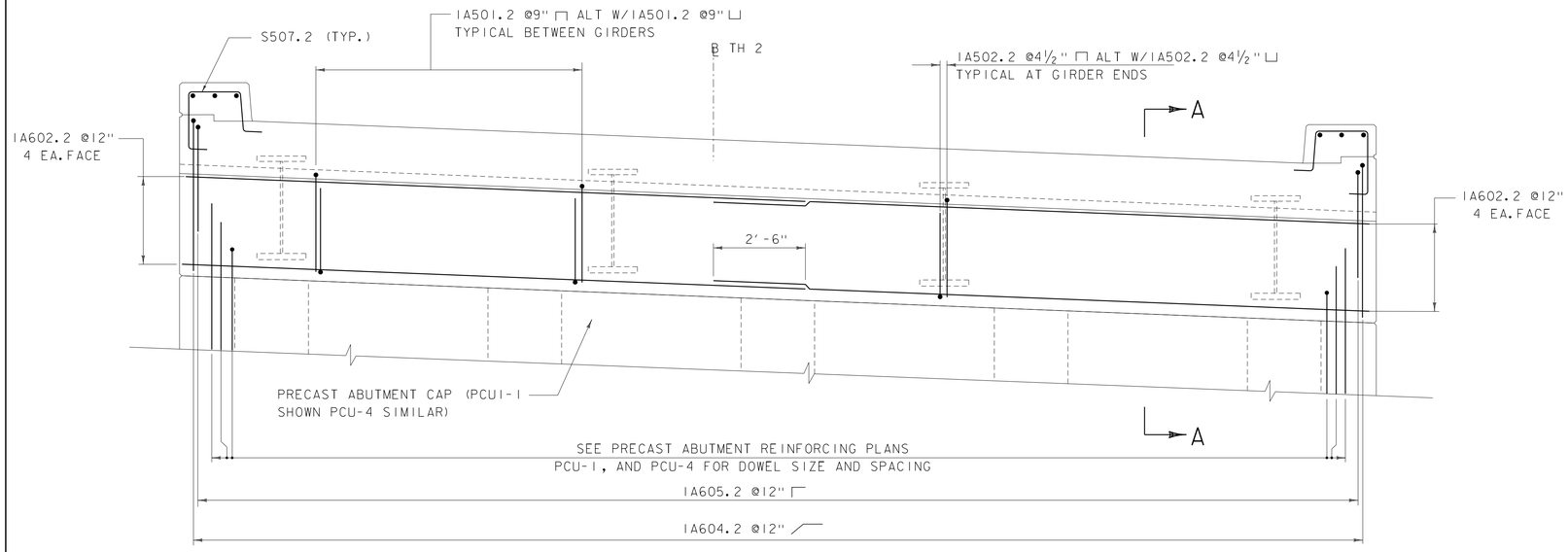

DECK CLOSURE POUR REINFORCING ELEVATION

(ABUTMENT 1 SHOWN, ABUTMENT 2 SIMILAR)
SCALE: ½" = 1'-0"

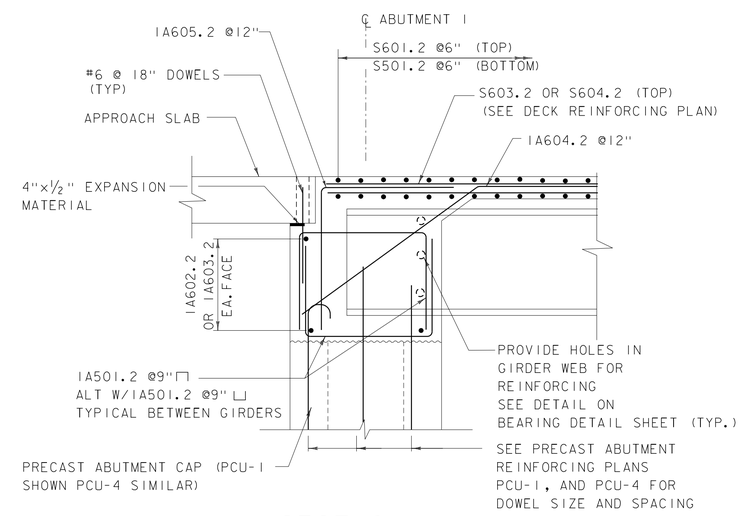

SECTION A-A

SCALE: ½" = 1'-0"

PROJECT NAME: NEW HAVEN
PROJECT NUMBER: BRF 0183 (1)

PARSONS BRINCKERHOFF
650 ELM STREET
MANCHESTER, NH 03101

FILE NAME: z10j070sub6.dgn
PROJECT LEADER: G.K.DONINGTON
DESIGNED BY: J. KIM
CLOSURE POUR DETAILS

PLOT DATE: 13-MARCH-2015
DRAWN BY: W GERHOLD
CHECKED BY: R. GAUDREAU
SHEET 31 OF 66

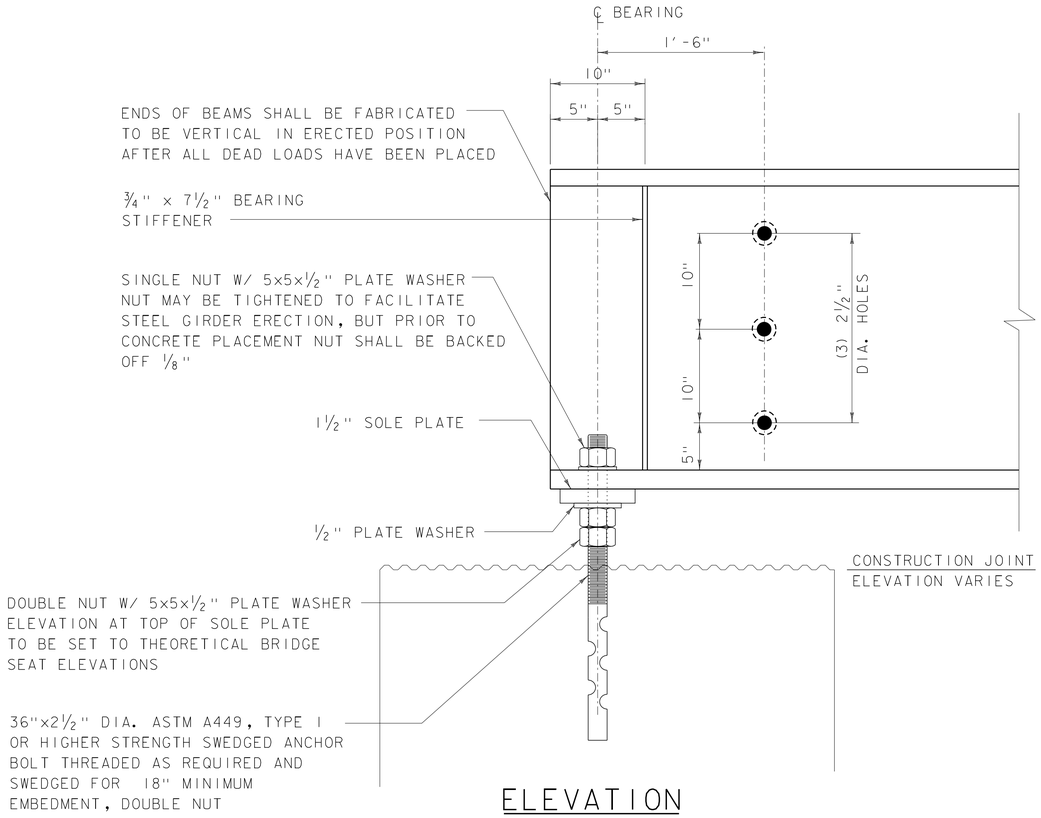

ELEVATION
END OF STEEL BEAM AT ABUTMENTS

SCALE: 1½" = 1'-0"

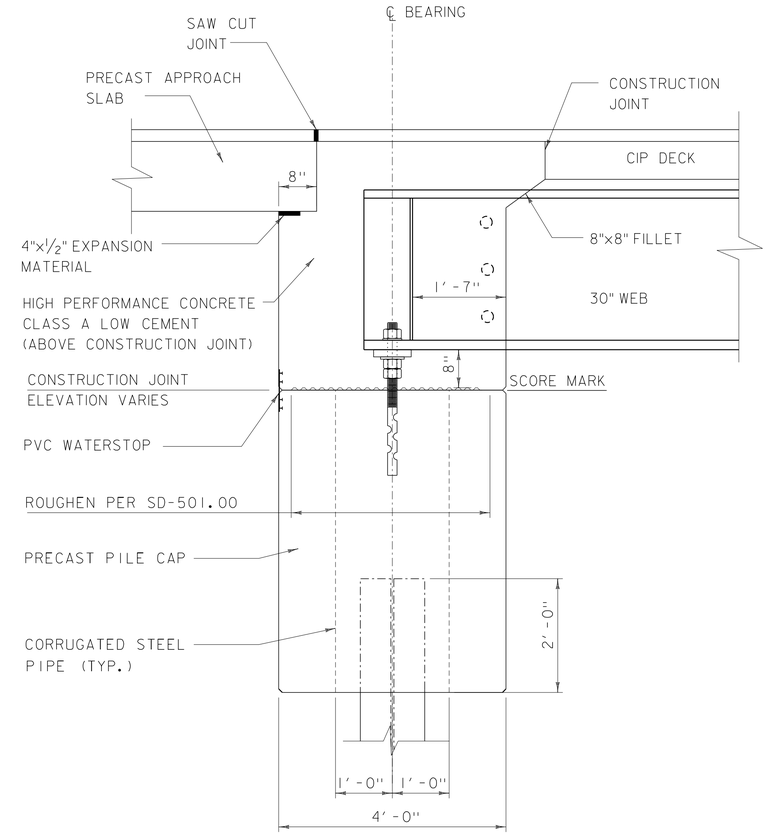

BRIDGE END DETAIL AND ABUTMENT TYPICAL SECTION

SCALE: ¾" = 1'-0"

NOTES:

1. THE SOLE PLATES, ANCHOR BOLTS, WASHERS AND NUTS SHALL BE PAID UNDER ITEM 506.65, "STRUCTURAL STEEL, CURVED PLATE GIRDER".
2. ANCHOR BOLTS SHALL BE 2 1/2" DIAMETER, TYPE 1 BOLTS MEETING THE ASTM A449. NUTS SHALL MEET AASHTO M291. THE CONTRACTOR SHALL ENSURE THAT THE ANCHOR BOLTS ARE INSTALLED IN A PLUMB POSITION. ONE EXTRA ANCHOR BOLT SHALL BE SUPPLIED FOR TESTING PURPOSES.
3. ALL STEEL IN BEARING DEVICE ASSEMBLY SHALL BE AASHTO M270M/M270 GRADE 36 UNLESS OTHERWISE NOTED.
4. SUBSTITUTIONS FOR BEARING DEVICE ASSEMBLY COMPONENT MATERIALS AND SIZES SHALL BE DETAILED ON THE FABRICATION DRAWINGS. ALL SUBSTITUTIONS SHALL BE APPROVED BY THE PROJECT MANAGER PRIOR TO FABRICATION AS PER SUBSECTION 506.04.
5. CAST ANCHOR BOLTS INTO PRECAST UNITS FOR INTERIOR GIRDERS CAST ANCHOR BOLTS INTO TUBES DURING GROUTING SEQUENCE FOR EXTERIOR GIRDERS.

THEORETICAL	TOP OF SOLE PLATE ELEVATIONS	
GIRDER	ABUTMENT 1	ABUTMENT 2
1	258.86	260.25
2	259.22	260.61
3	259.58	260.97
4	259.94	261.33

* GREASE TOP OF SOLE PLATE BEFORE GIRDER PLACEMENT

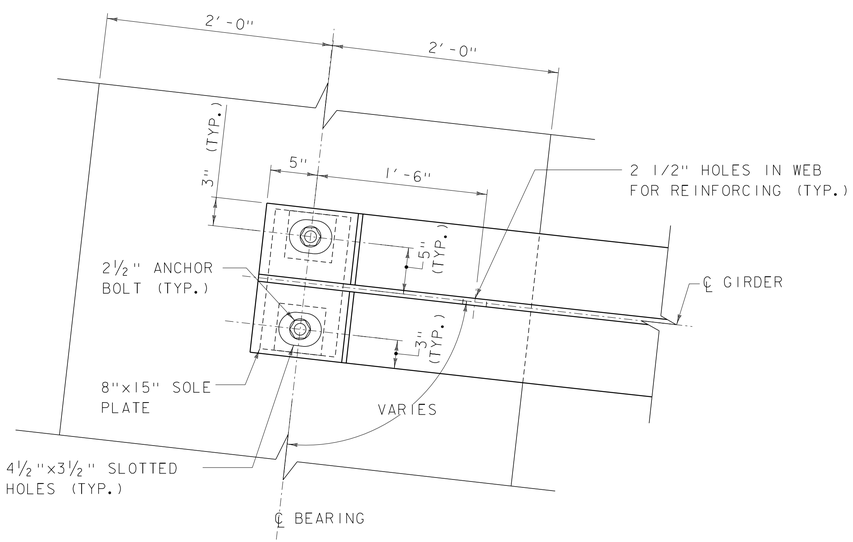

PLAN - END OF STEEL GIRDER AT ABUTMENT 1

SCALE: 1½" = 1'-0"

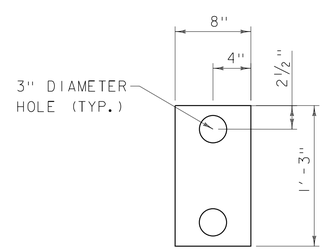

1½" SOLE PLATE DETAIL

SCALE: 1½" = 1'-0"

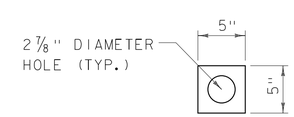

1½" PLATE WASHER DETAIL

SCALE: 1½" = 1'-0"

PROJECT NAME: NEW HAVEN
PROJECT NUMBER: BRF 0183 (1)

PARSONS BRINCKERHOFF
650 ELM STREET
MANCHESTER, NH 03101

FILE NAME: z10j070sub7.dgn
PROJECT LEADER: G.K.DONINGTON
DESIGNED BY: J. KIM
BEARING DETAILS

PLOT DATE: 13-MARCH-2015
DRAWN BY: W GERHOLD
CHECKED BY: R. GAUDREAU
SHEET 32 OF 64

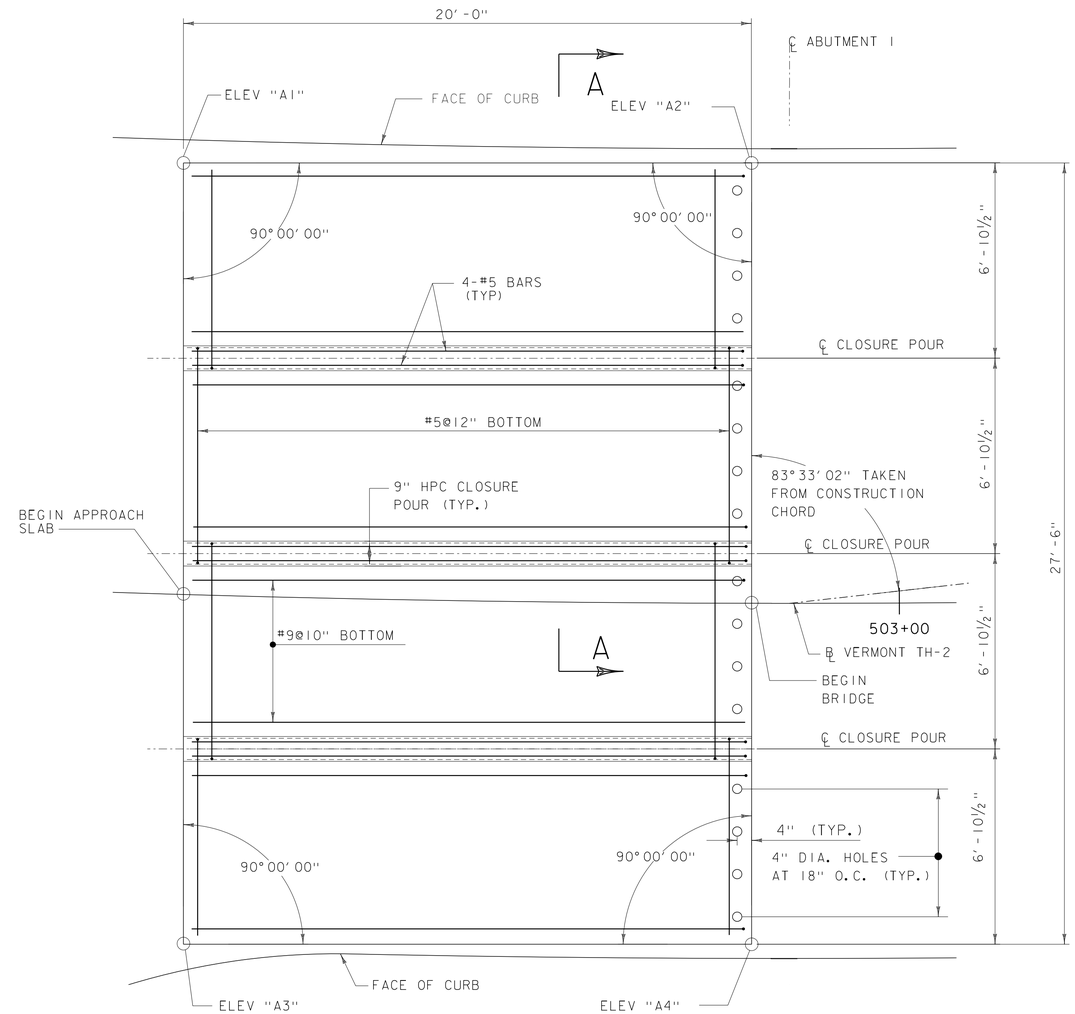

APPROACH SLAB 1 - PLAN

SCALE: ⅜" = 1'-0"

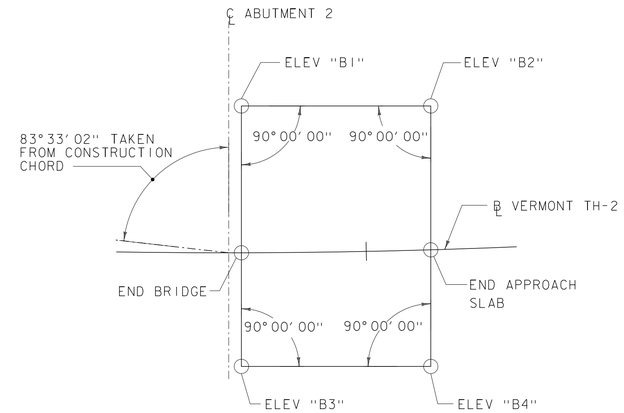

APPROACH SLAB 2 - PLAN

SCALE: ⅛" = 1'-0"

	STATION	OFFSET	ELEVATION
A1	502+74.35	15.19' LT	262.08
A2	502+94.80	15.50' LT	262.55
BEGIN AS 1	502+74.80	0.00'	262.70
BEGIN BRIDGE	502+94.80	0.00'	263.17
A3	502+75.15	12.30' RT	263.20
A4	502+94.80	12.00' RT	263.65
B1	504+61.82	15.50' LT	263.96
B2	504+82.27	15.18' LT	263.84
END BRIDGE	504+61.82	0.00'	264.58
END AS	504+81.82	0.00'	264.45
B3	504+61.82	12.00' RT	265.06
B4	504+81.46	12.31' RT	264.95

APPROACH SLAB ELEVATIONS

ALL ELEVATIONS ARE TOP OF SLAB

NOTE:

3" CLEAR, UNLESS OTHERWISE SPECIFIED ON THE PLANS.

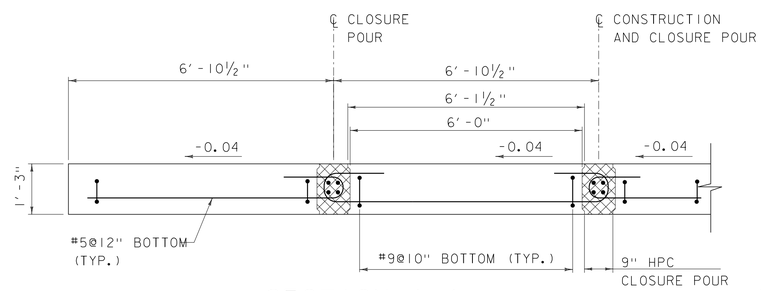

SECTION A-A

SCALE: ½" = 1'-0"

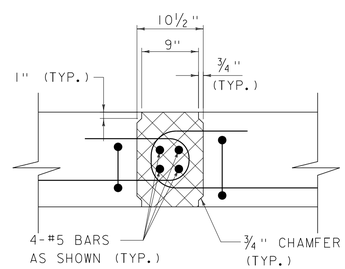

JOINT DETAIL SECTION

SCALE: 1" = 1'-0"

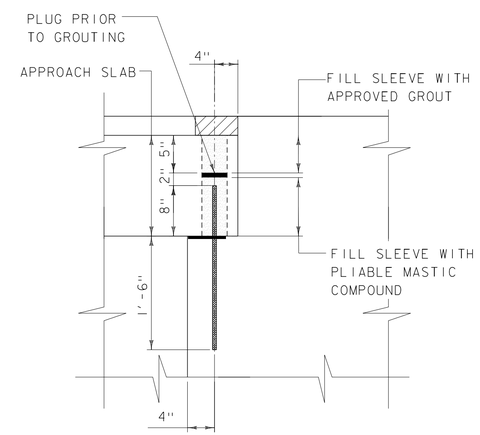

APPROACH SLAB DOWEL DETAIL

SCALE: 1" = 1'-0"

NOTE:
THE APPROACH SLAB DOWELS SHALL BE CAST INTO THE APPROACH SLAB SEAT. THE BOTTOM LENGTH OF THE SLEEVE WITHIN THE APPROACH SLAB SHALL BE FILLED WITH A PLIABLE MASTIC COMPOUND. THE UPPER PORTION SHALL BE PLUGGED AND THEN FILLED WITH AN APPROVED GROUT. ALL COSTS ASSOCIATED WITH THIS WORK SHALL BE INCLUDED IN THE UNIT PRICE BID FOR ITEM 540.10 PRECAST CONCRETE STRUCTURE (APPROACH SLAB #1) OR (APPROACH SLAB #2) AS APPROPRIATE.

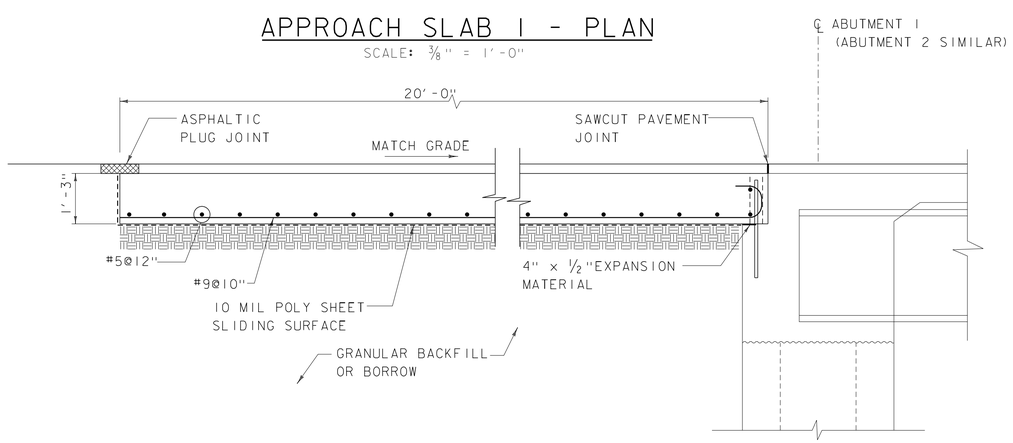

APPROACH SLAB ELEVATION

SCALE: ½" = 1'-0"

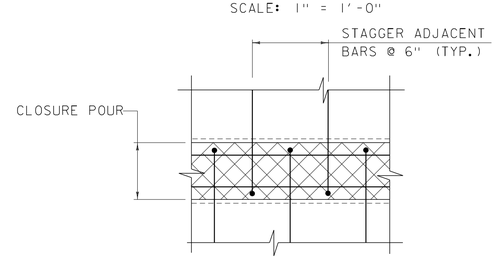

JOINT DETAIL PLAN

SCALE: 1" = 1'-0"

PARSONS BRINCKERHOFF
650 ELM STREET
MANCHESTER, NH 03101

PROJECT NAME: NEW HAVEN
PROJECT NUMBER: BRF 0183 (1)

FILE NAME: z10j070appslab.dgn
PROJECT LEADER: G.K.DONINGTON
DESIGNED BY: R.GAUDREAU
APPROACH SLAB

PLOT DATE: 13-MARCH-2015
DRAWN BY: W GERHOLD
CHECKED BY: A.STOCKIN
SHEET 33 OF 66

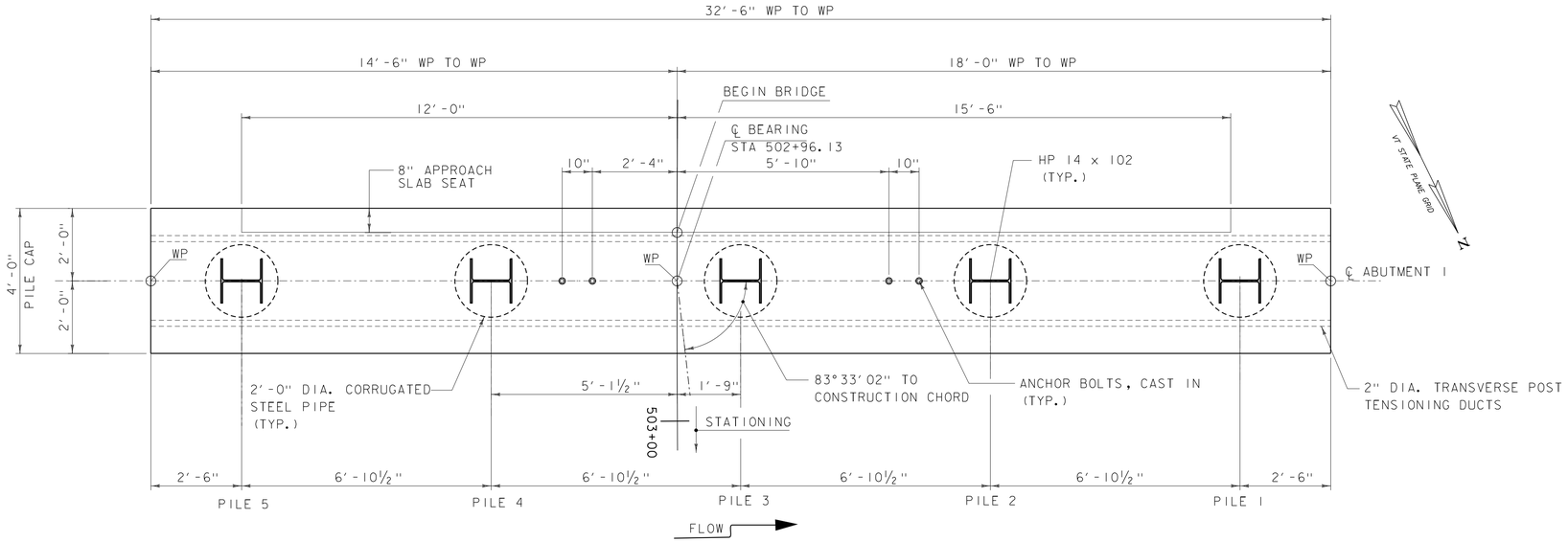

ABUTMENT 1 PLAN (PCU 1)

SCALE: ½" = 1'-0"

PCU 1 ELEVATIONS

ELEV "A"	259.38
ELEV "B"	252.08
ELEV "C"	258.08
ELEV "D"	252.08

NOTE:
POST TENSIONING DUCTS OPTIONAL WITH CONSTRUCTION JOINT OPTION.

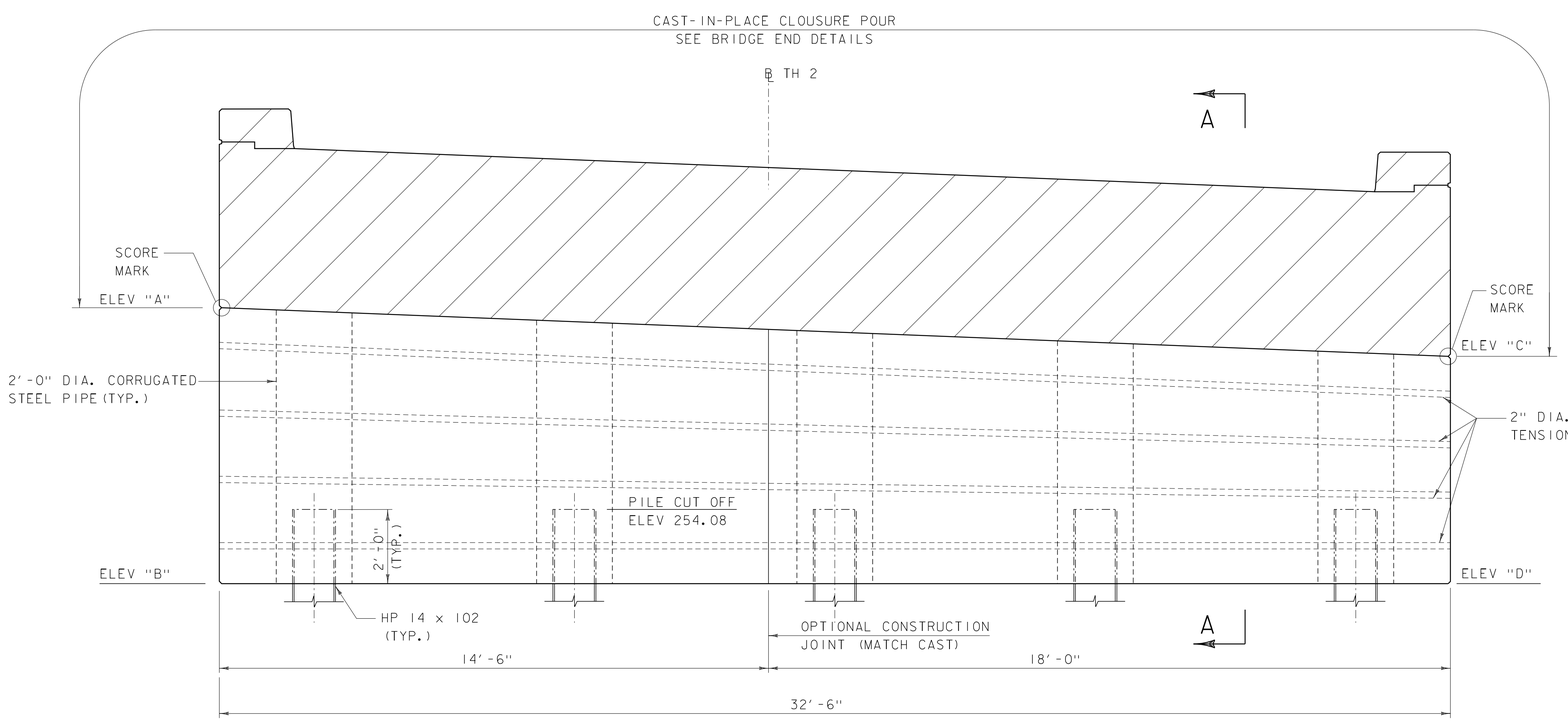

ABUTMENT 1 ELEVATION (PCU 1)

SCALE: ½" = 1'-0"

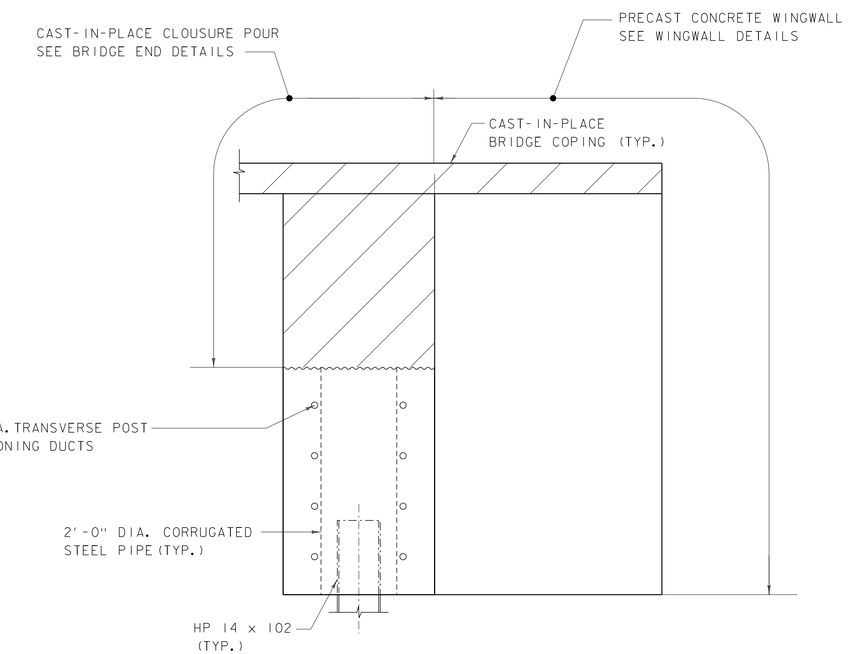

SECTION A-A (PCU 1)

SCALE: ½" = 1'-0"

PROJECT NAME: NEW HAVEN
PROJECT NUMBER: BRF 0183 (1)

PARSONS BRINCKERHOFF
650 ELM STREET
MANCHESTER, NH 03101

FILE NAME: z10j070sub.dgn
PROJECT LEADER: G.K.DONINGTON
DESIGNED BY: J. KIM
ABUTMENT 1 PLAN

PLOT DATE: 13-MARCH-2015
DRAWN BY: W GERHOLD
CHECKED BY: A.STOCKIN
SHEET 34 OF 66

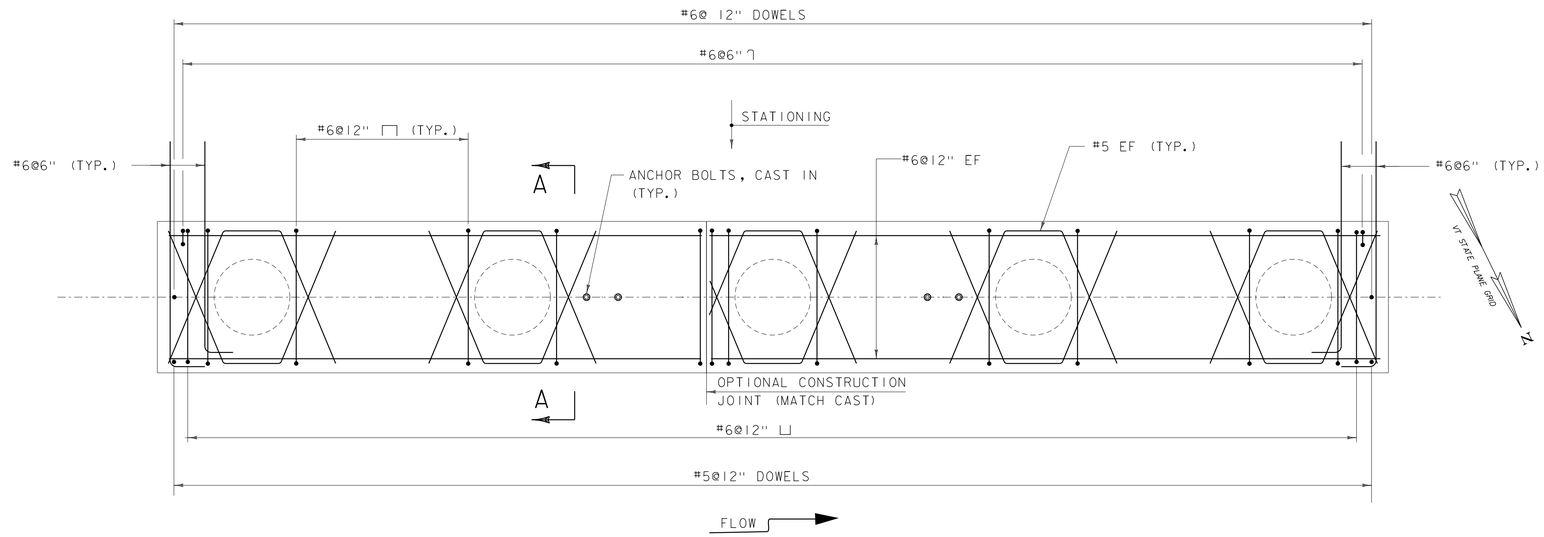

ABUTMENT 1 REINFORCING PLAN (PCU 1)

SCALE: 1/2" = 1'-0"

NOTE:

NF = NEAR FACE
FF = FAR FACE
EF = EACH FACE
3" CLEAR, UNLESS OTHERWISE SPECIFIED ON THE PLANS.

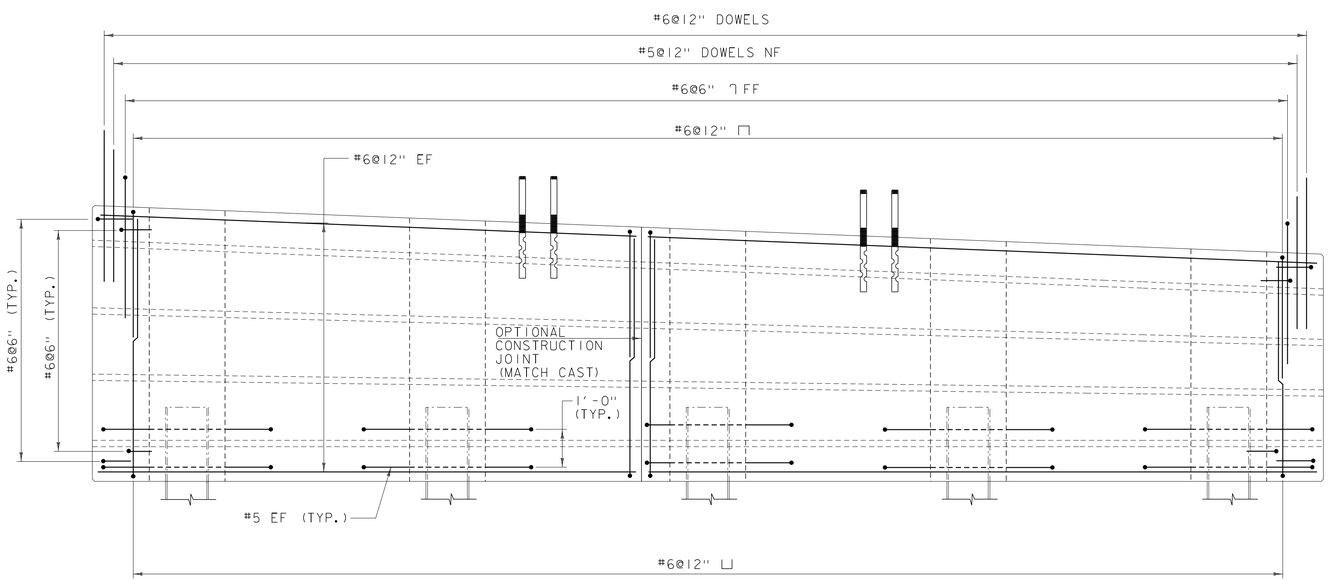

ABUTMENT 1 REINFORCING ELEVATION (PCU 1)

SCALE: 1/2" = 1'-0"

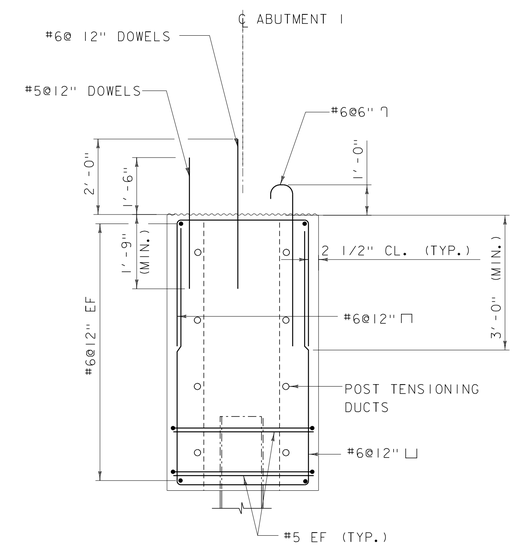

SECTION A-A

SCALE: 1/2" = 1'-0"

PROJECT NAME: NEW HAVEN	
PROJECT NUMBER: BRF 0183 (1)	
PARSONS BRINCKERHOFF 650 ELM STREET MANCHESTER, NH 03101	
FILE NAME: z10j070sub3.dgn	PLOT DATE: 13-MARCH-2015
PROJECT LEADER: G.K.DONINGTON	DRAWN BY: W GERHOLD
DESIGNED BY: J. KIM	CHECKED BY: A. STOCKIN
ABUTMENT 1 REINFORCING	SHEET 35 OF 66

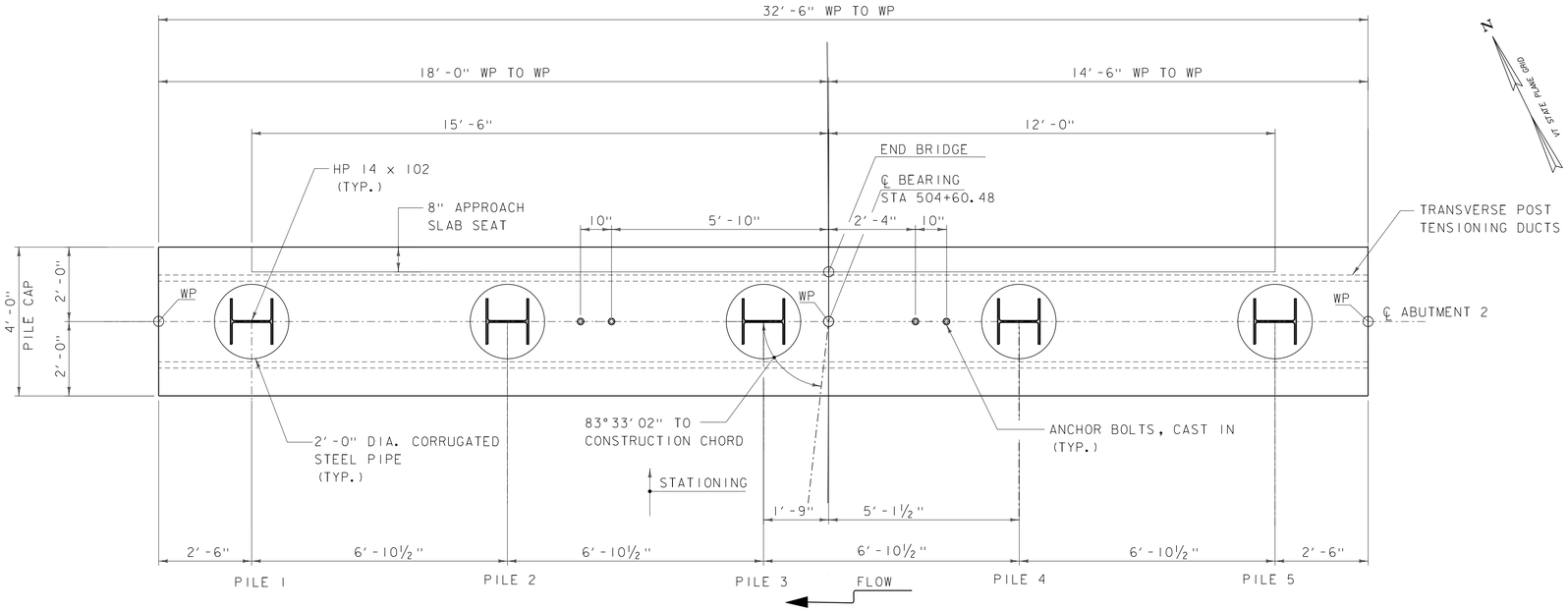

ABUTMENT 2 PLAN (PCU 4)

SCALE: ½" = 1'-0"

PCU 4 ELEVATIONS

ELEV "A"	259.47
ELEV "B"	253.47
ELEV "C"	260.77
ELEV "D"	253.47

NOTE:
POST TENSIONING DUCTS OPTIONAL WITH CONSTRUCTION JOINT OPTION.

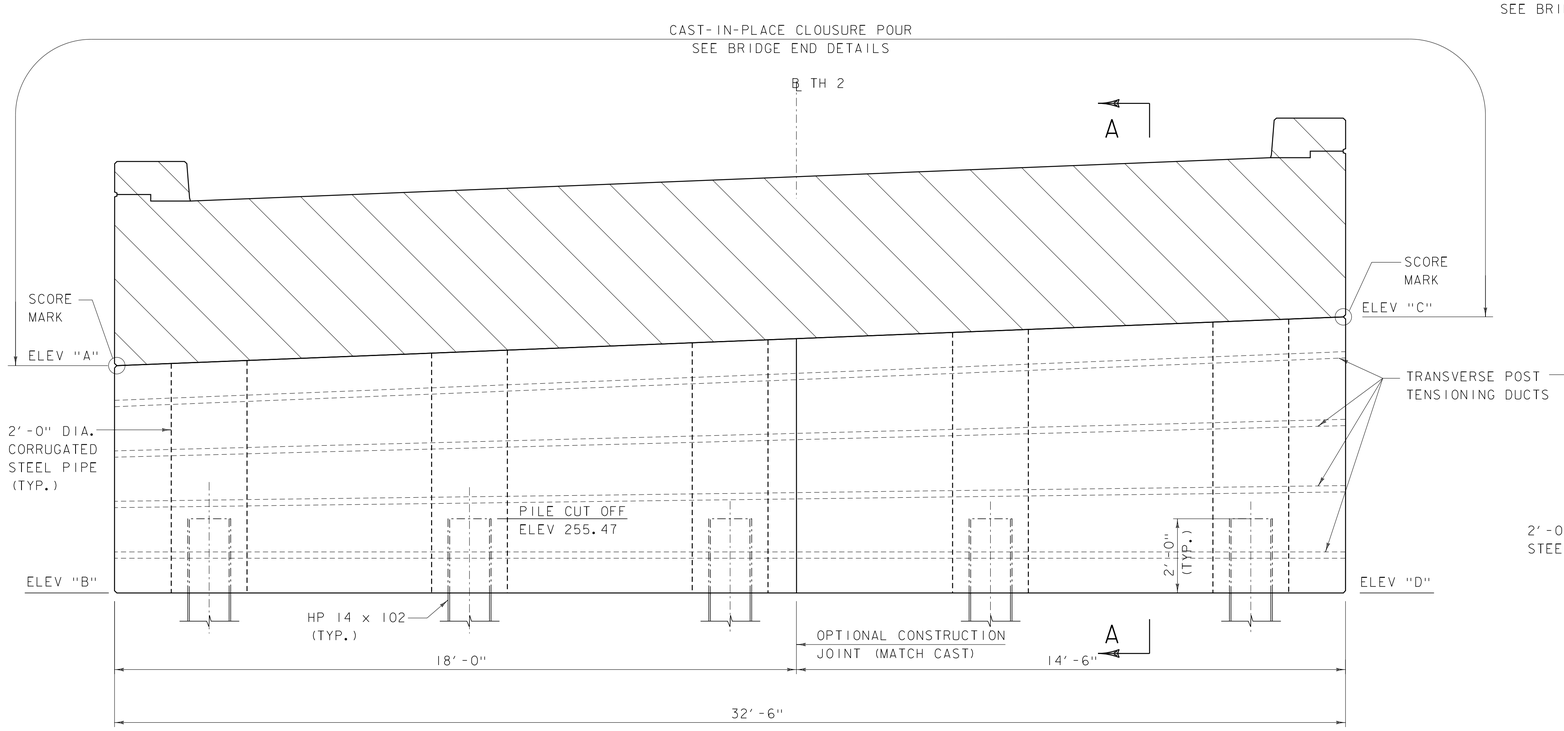

ABUTMENT 2 ELEVATION (PCU 4)

SCALE: ½" = 1'-0"

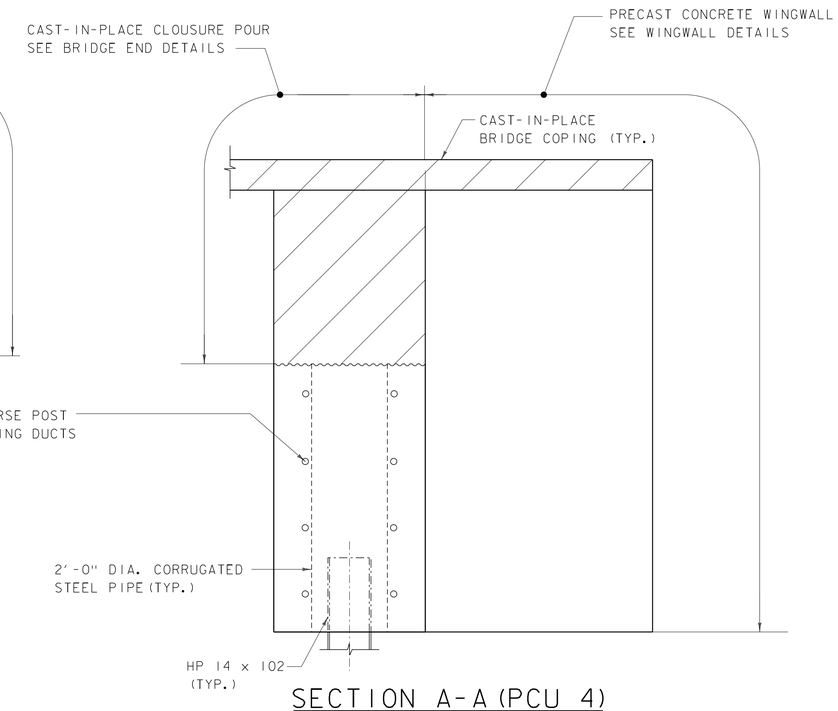

SECTION A-A (PCU 4)

SCALE: ½" = 1'-0"

PROJECT NAME: NEW HAVEN
PROJECT NUMBER: BRF 0183 (1)

PARSONS BRINCKERHOFF
650 ELM STREET
MANCHESTER, NH 03101

FILE NAME: z10j070sub2.dgn
PROJECT LEADER: G.K.DONINGTON
DESIGNED BY: J. KIM
ABUTMENT 2 PLAN

PLOT DATE: 13-MARCH-2015
DRAWN BY: W GERHOLD
CHECKED BY: A. STOCKIN
SHEET 36 OF 66

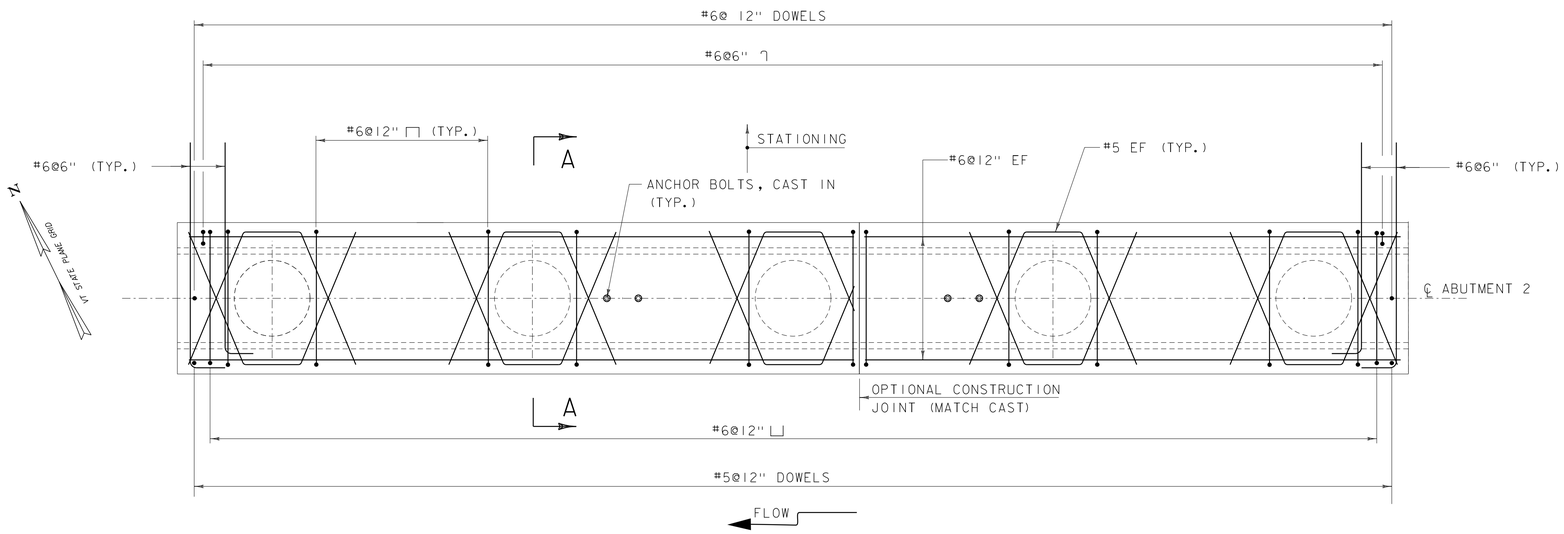

ABUTMENT 2 REINFORCING PLAN (PCU 4)

SCALE: ½" = 1'-0"

NOTE:

NF = NEAR FACE
FF = FAR FACE
EF = EACH FACE
3" CLEAR, UNLESS OTHERWISE SPECIFIED ON THE PLANS.

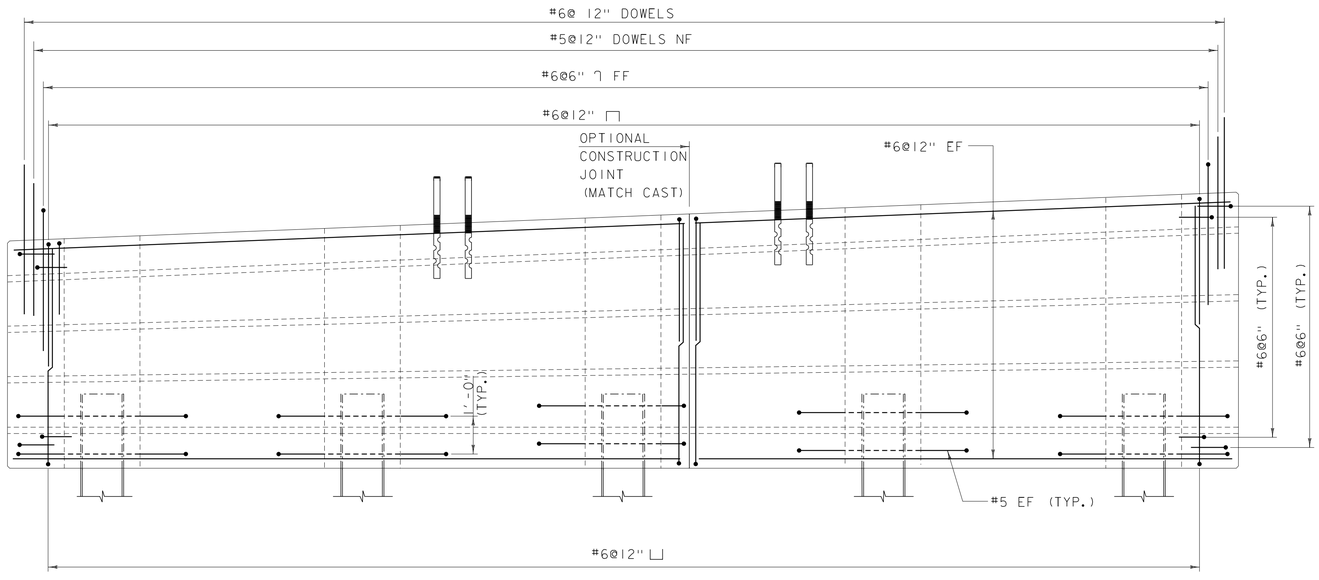

ABUTMENT 2 REINFORCING ELEVATION (PCU 4)

SCALE: ½" = 1'-0"

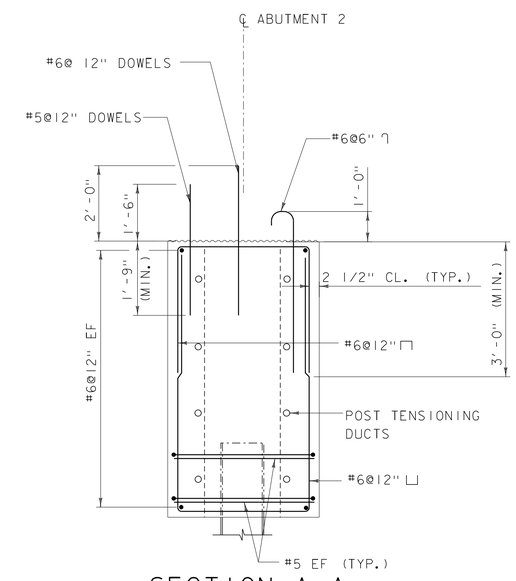

SECTION A-A

SCALE: ½" = 1'-0"

PROJECT NAME: NEW HAVEN	
PROJECT NUMBER: BRF 0183 (1)	
PARSONS BRINCKERHOFF 650 ELM STREET MANCHESTER, NH 03101	
FILE NAME: z10j070sub4.dgn	PLOT DATE: 13-MARCH-2015
PROJECT LEADER: G.K.DONINGTON	DRAWN BY: W GERHOLD
DESIGNED BY: J. KIM	CHECKED BY: B.BINNEY
ABUTMENT 2 REINFORCEMENT	SHEET 37 OF 66

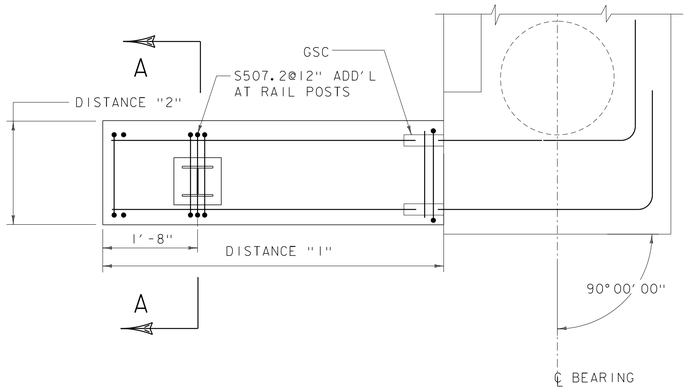

WINGWALL PLAN (PCU 3)

(PCU 3 SHOWN, PCU 2 AND PCU 5, SIMILAR)
SCALE: 3/4" = 1'-0"

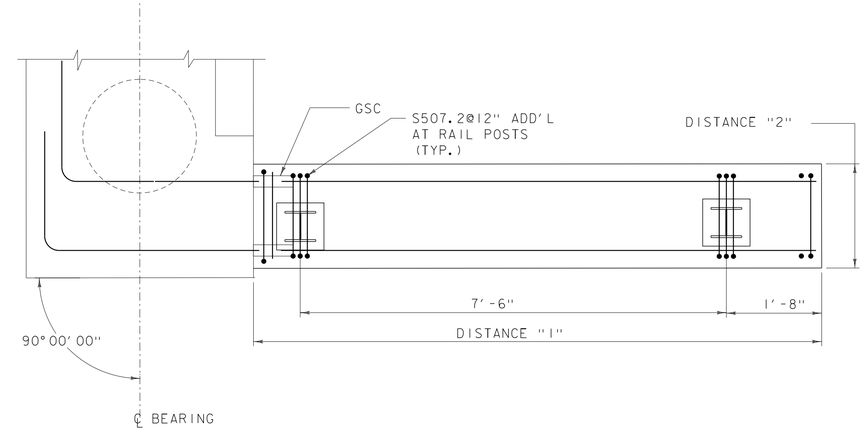

WINGWALL PLAN (PCU 6)

SCALE: 3/4" = 1'-0"

PCU 2-3, PCU 5-6 ELEVATIONS

	(PCU 2)	(PCU 3)	(PCU 5)	(PCU 6)
ELEV "A"	262.37	263.52	263.90	265.03
ELEV "B"	258.08	259.38	259.47	260.77
ELEV "C"	252.08	252.08	253.47	253.47
ELEV "D"	262.51	263.65	263.94	265.08
DIST "1"	6'-00"	6'-00"	6'-00"	10'-00"
DIST "2"	1'-10"	1'-10"	1'-10"	1'-10"

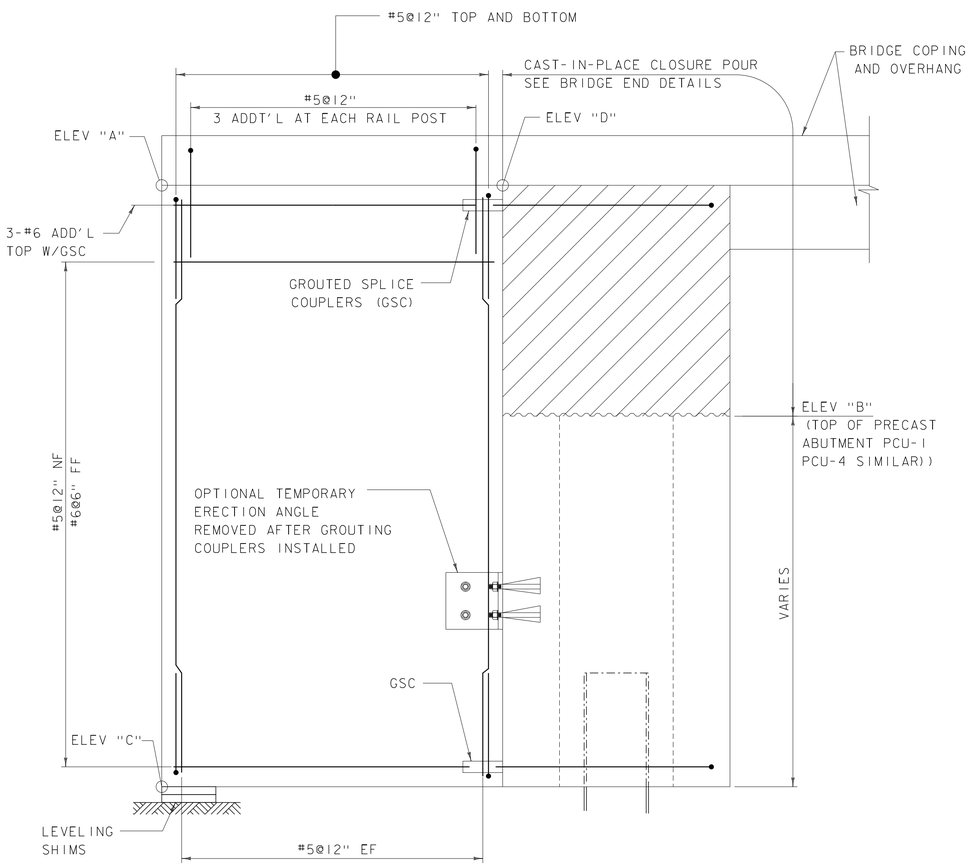

WINGWALL ELEVATION (PCU 3)

(PCU 3 SHOWN, PCU 2, PCU 5, AND PCU 6 SIMILAR)
SCALE: 3/4" = 1'-0"

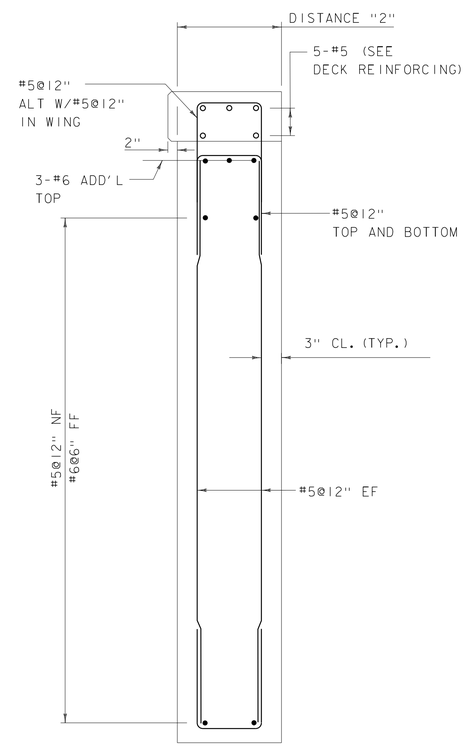

WINGWALL SECTION A-A (PCU 3)

(PCU 3 SHOWN, PCU 2, PCU 5, AND PCU 6 SIMILAR)
SCALE: 3/4" = 1'-0"

GROUTED SPLICE COUPLER DIMENSIONS

BAR SIZE	OUTSIDE DIA. (IN)	LENGTH (IN)
5	3	14.125
6	3	14.125
7	3	18.75

NOTE:

NF = NEAR FACE
FF = FAR FACE
EF = EACH FACE
Δ = CUT TO FIT IN FIELD
3" CLEAR, UNLESS OTHERWISE SPECIFIED ON THE PLANS.
TOP OF PRECAST WINGWALL SHALL BE ROUGHENED TO 1/4" AMPLITUDE.

PROJECT NAME: NEW HAVEN
PROJECT NUMBER: BRF 0183 (1)

PARSONS BRINCKERHOFF
650 ELM STREET
MANCHESTER, NH 03101

FILE NAME: z10j070sub5.dgn
PROJECT LEADER: G.K.DONINGTON
DESIGNED BY: R. GAUDREAU
WINGWALL DETAILS

PLOT DATE: 13-MARCH-2015
DRAWN BY: W GERHOLD
CHECKED BY: A. STOCKIN
SHEET 38 OF 66

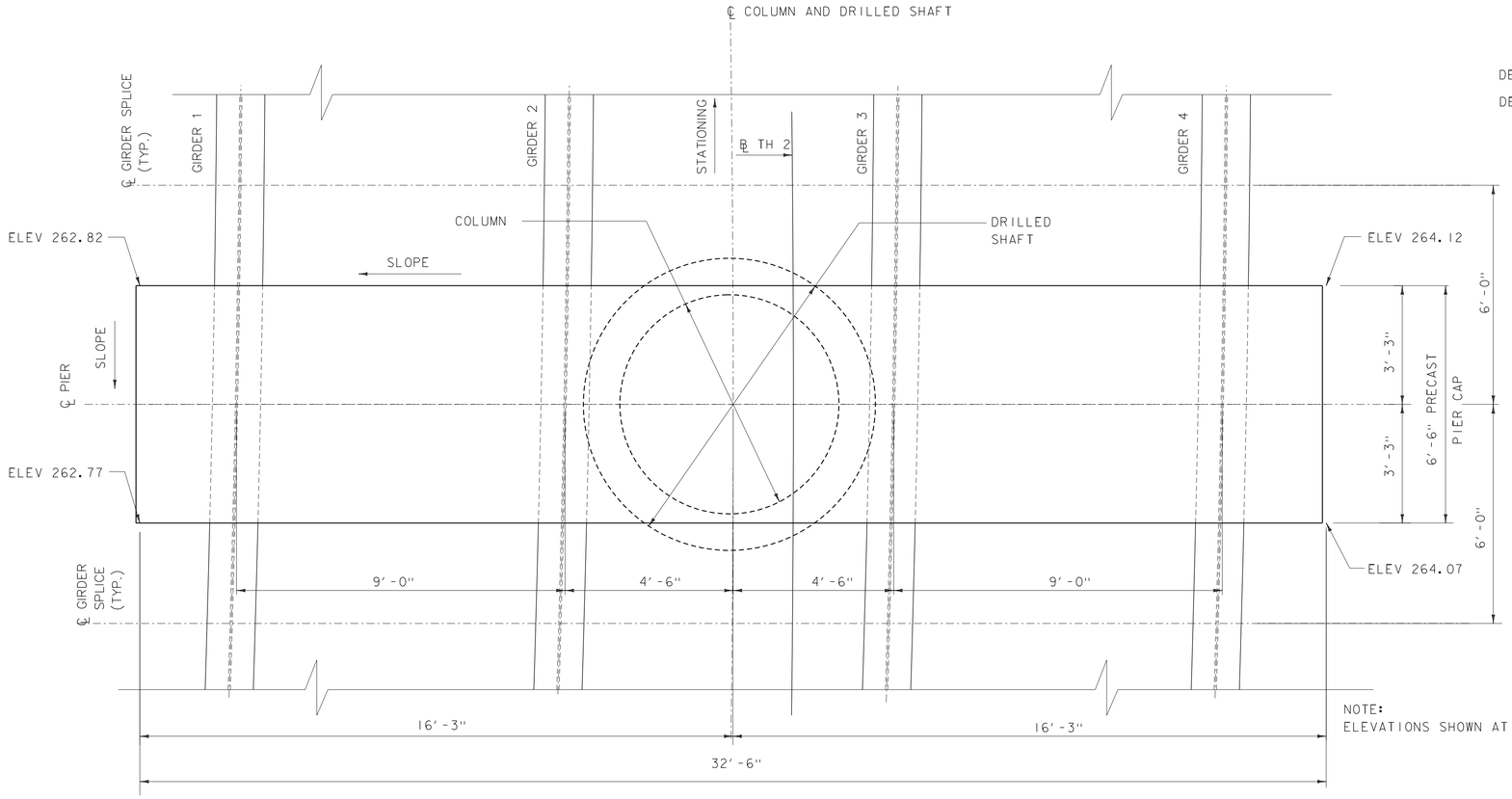

NOTE:
ELEVATIONS SHOWN AT TOP OF PIER CAP

PLAN - PRECAST PIER CAP MASONRY

SCALE: ½" = 1'-0"

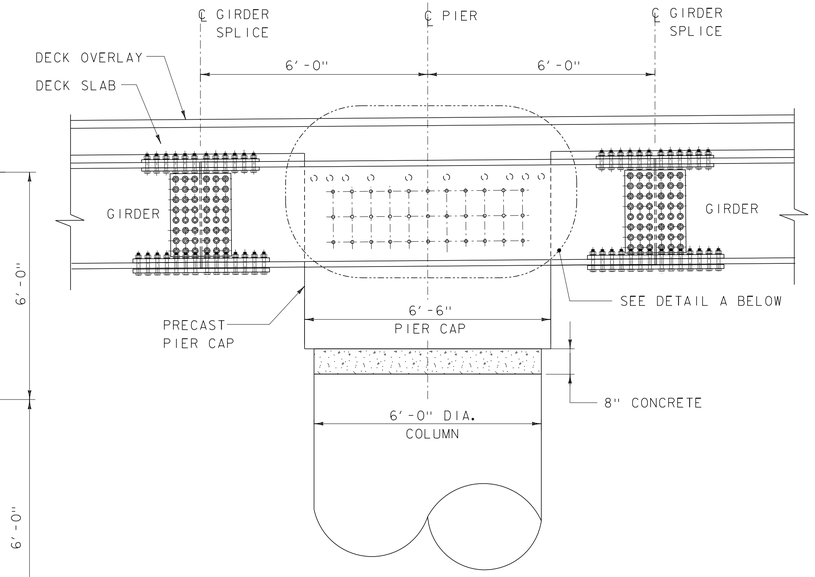

SECTION A-A

(REINFORCEMENT NOT SHOWN)

SCALE: ½" = 1'-0"

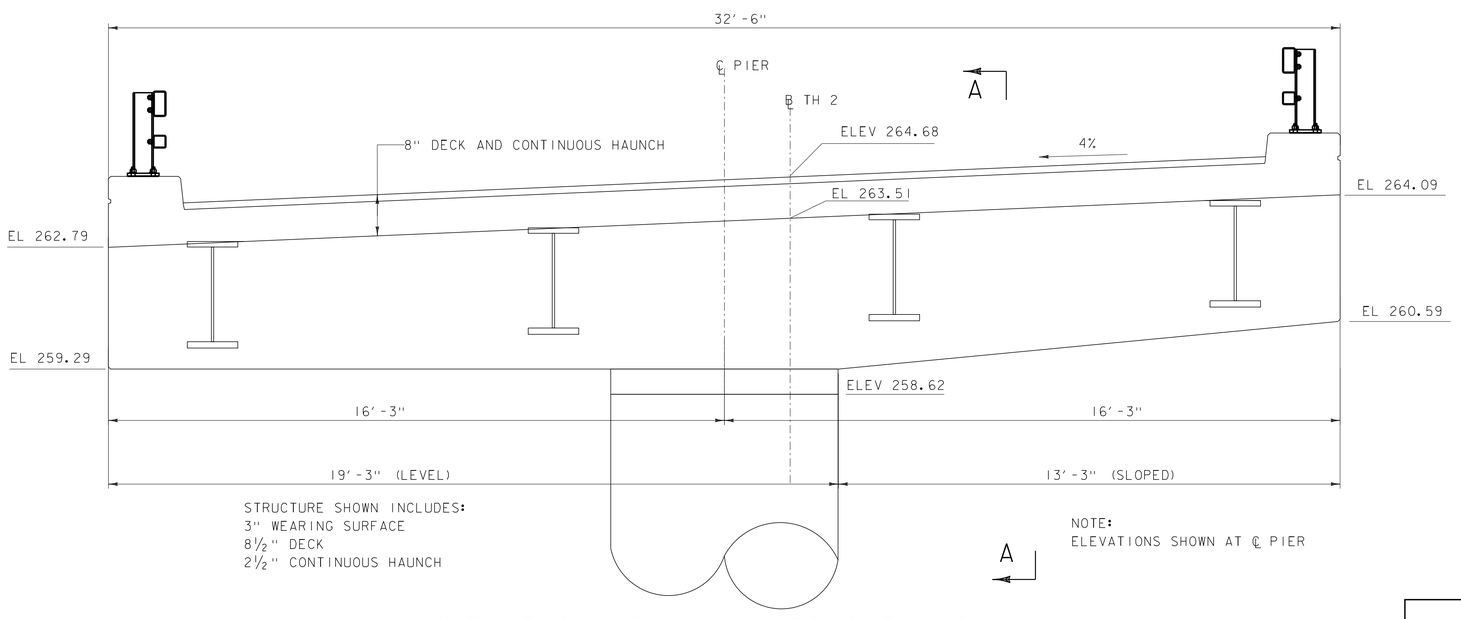

STRUCTURE SHOWN INCLUDES:
3" WEARING SURFACE
8½" DECK
2½" CONTINUOUS HAUNCH

NOTE:
ELEVATIONS SHOWN AT ℄ PIER

ELEVATION PRECAST PIER CAP MASONRY

SCALE: ½" = 1'-0"

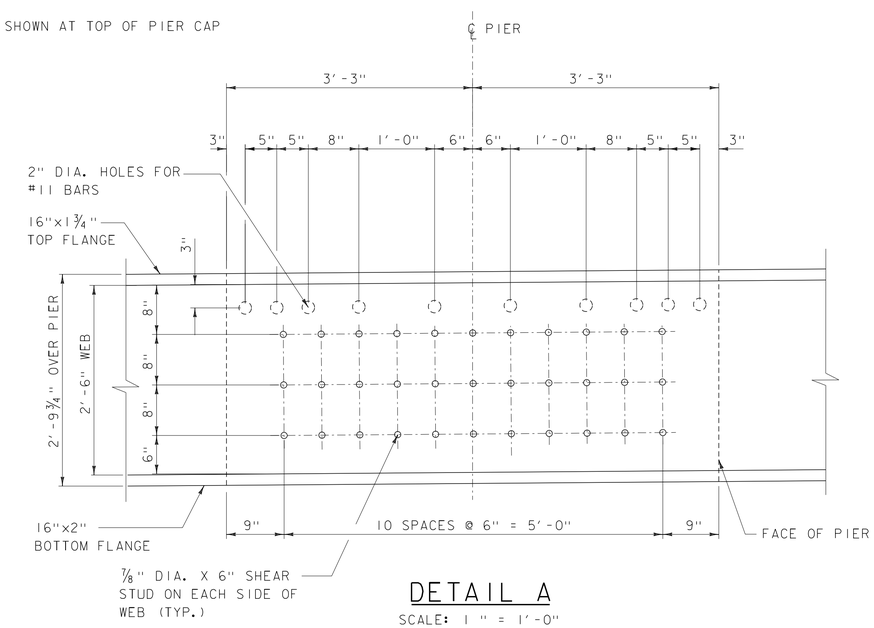

DETAIL A

SCALE: 1" = 1'-0"

PARSONS BRINCKERHOFF
650 ELM STREET
MANCHESTER, NH 03101

PROJECT NAME: NEW HAVEN	
PROJECT NUMBER: BRF 0183 (1)	
FILE NAME: z10j070sup2.dgn	PLOT DATE: 13-MARCH-2105
PROJECT LEADER: G.K.DONINGTON	DRAWN BY: W GERHOLD
DESIGNED BY: J. KIM	CHECKED BY: A. STOCKIN
PIER CAP DETAILS (1)	SHEET 39 OF 66

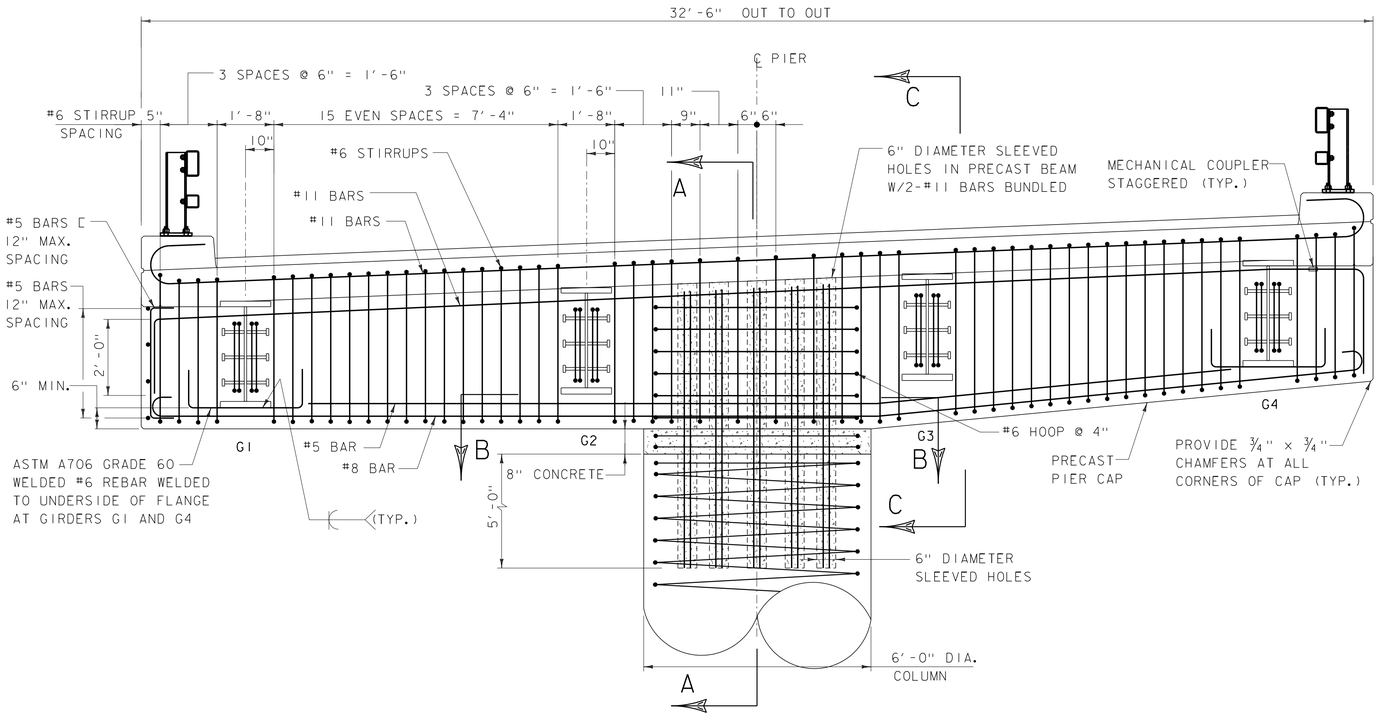

ELEVATION PIER CAP REINFORCEMENT

SCALE: 1/2" = 1'-0"

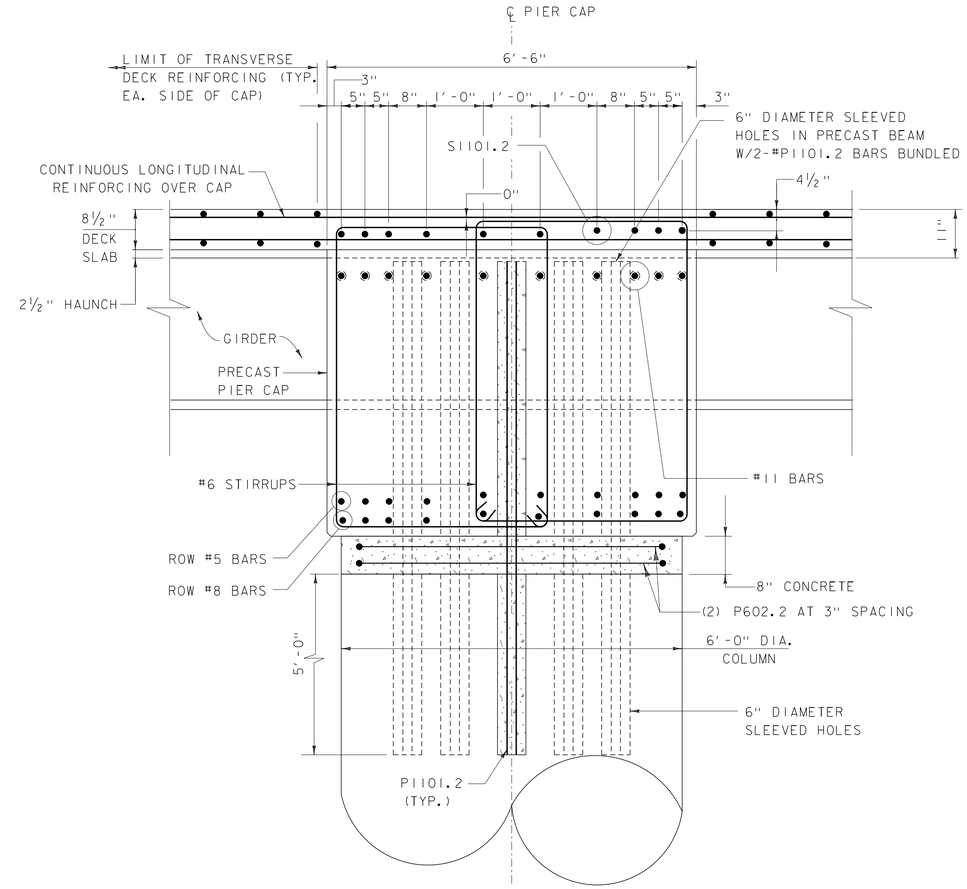

SECTION A-A

SCALE: 3/4" = 1'-0"

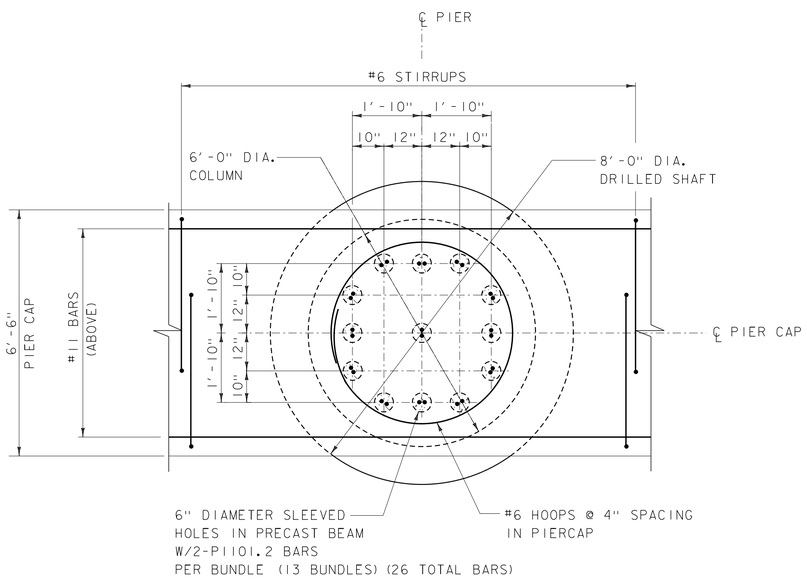

PLAN SECTION B-B

SCALE: 1/2" = 1'-0"

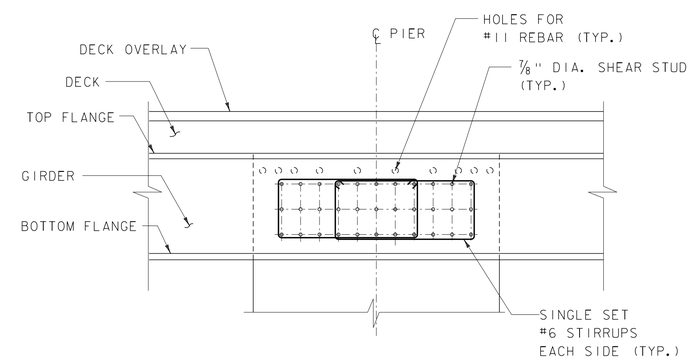

SECTION C-C

SCALE: 1/2" = 1'-0"

NOTE:

NF = NEAR FACE
FF = FAR FACE
EF = EACH FACE
3" CLEAR, UNLESS OTHERWISE SPECIFIED ON THE PLANS.

PARSONS BRINCKERHOFF
650 ELM STREET
MANCHESTER, NH 03101

PROJECT NAME: NEW HAVEN	
PROJECT NUMBER: BRF 0183 (1)	
FILE NAME: z10j070sup2.dgn	PLOT DATE: 13-MARCH-2015
PROJECT LEADER: G.K.DONINGTON	DRAWN BY: W GERHOLD
DESIGNED BY: J. KIM	CHECKED BY: A. STOCKIN
PIER CAP DETAILS (2)	SHEET 40 OF 66

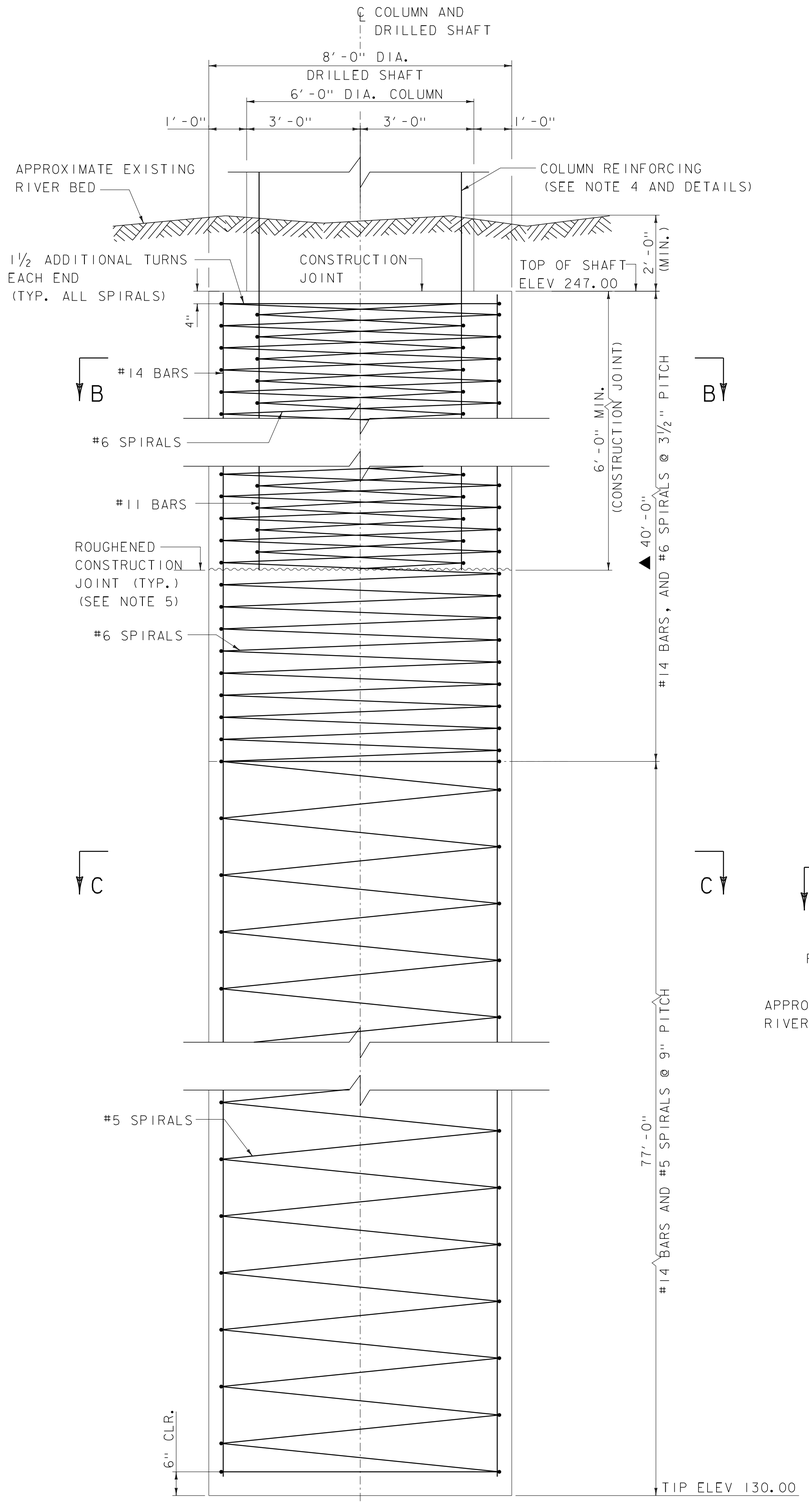

96" DIA. DRILLED SHAFT

SCALE" ½" = 1'-0"

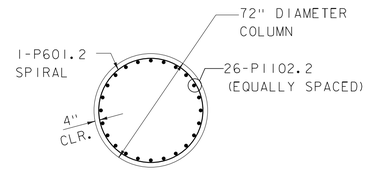

SECTION A-A

SCALE: ¼" = 1'-0"

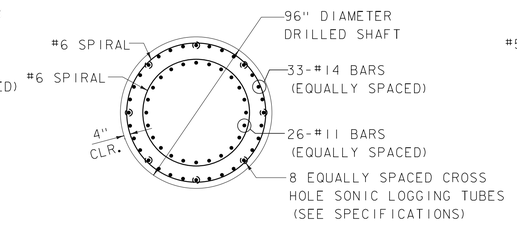

SECTION B-B

SCALE: ¼" = 1'-0"

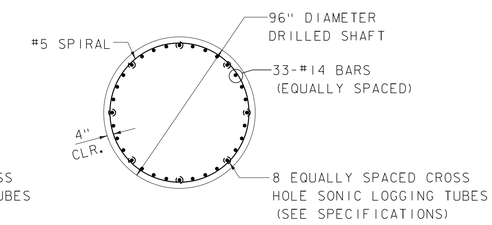

SECTION C-C

SCALE: ¼" = 1'-0"

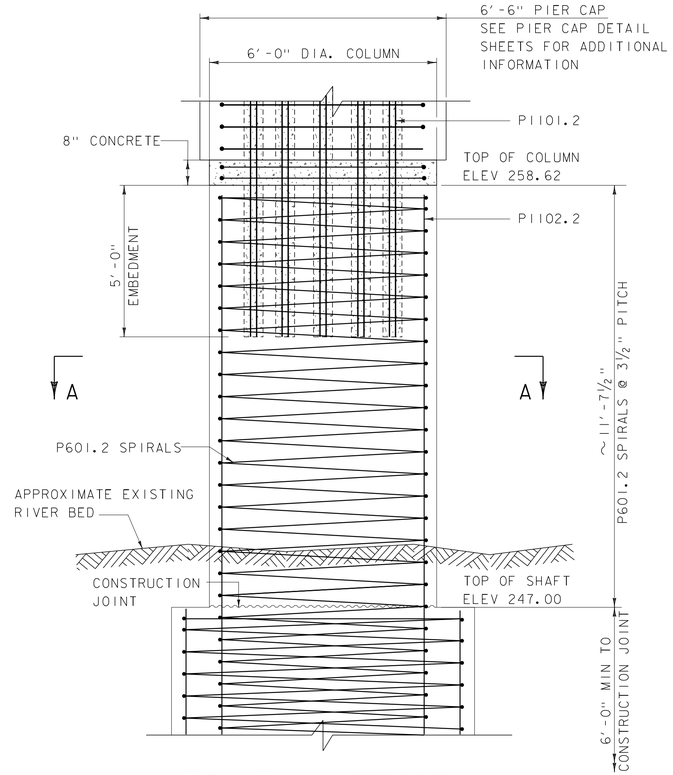

72" DIA. COLUMN

SCALE" ½" = 1'-0"

DRILLED SHAFT SCHEDULE

PIER NUMBER	MIN REQUIRED STRENGTH LIMIT LOAD [KIPS]	TOP OF SHAFT ELEV ** [FT.]	MINIMUM REQUIRED PILE TIP ELEV *** [FT.]
PIER 1	1500	247.00	130

** TOP OF SHAFT ELEVATION IS APPROXIMATE, CONTRACTOR SHALL FIELD VERIFY THAT THE TOP OF SHAFT ELEVATION SHOWN IS A MINIMUM OF 2'-0" BELOW THE EXISTING RIVER BED.

*** THE TIP ELEVATION ABOVE IS BASED ON BORINGS PERFORMED BY VTRANS.

▲ ADJUST LENGTH OF SPIRALS AND PRIMARY REINFORCEMENT BASED ON FINAL TOP ELEVATION.

NOTES:

1. FOR LOCATION OF DRILLED SHAFT SEE FOUNDATION LAYOUT SHEET.
2. LAP SPLICES SHALL NOT BE USED FOR BARS LARGER THAN #11. MECHANICAL SPLICES SHALL BE PROVIDED FOR BARS LARGER THAN #11 IN ACCORDANCE WITH VTRANS STANDARDS.
3. NO SPLICES OF PRIMARY SHAFT REINFORCEMENT SHALL OCCUR WITHIN 6'-0" OF THE TOP OF SHAFT. BELOW THIS DEPTH, ALTERNATING MECHANICAL SPLICES (AS REQUIRED) WITH A MIN. 8'-0" STAGGER SHALL BE PROVIDED TO ACHIEVE THE REQUIRED LENGTHS OF #14 REBAR.
4. COLUMN REINFORCING SHALL EXTEND A MINIMUM OF 6'-0" BELOW TOP OF SHAFT. SEE SHAFT DETAILS FOR REQUIRED REINFORCEMENT.
5. CONSTRUCTION JOINT SHALL BE PREPARED IN ACCORDANCE WITH THE DRILLED SHAFT FOUNDATIONS STANDARD SPECIFICATIONS.
6. CONNECTIONS OF SPIRAL REINFORCEMENT IN THE TOP 40'-0" MUST BE ACCOMPLISHED USING MECHANICAL COUPLERS.

NOTE:

NF = NEAR FACE
FF = FAR FACE
EF = EACH FACE
= CUT TO FIT IN FIELD
3" CLEAR, UNLESS OTHERWISE SPECIFIED ON THE PLANS.

PARSONS BRINCKERHOFF
650 ELM STREET
MANCHESTER, NH 03101

PROJECT NAME: NEW HAVEN
PROJECT NUMBER: BRF 0183 (1)

FILE NAME: z10j070sup3.dgn
PROJECT LEADER: K. DONINGTON
DESIGNED BY: J. KIM
DRILLED SHAFT AND COLUMN DETAILS

PLOT DATE: 13-MARCH-2015
DRAWN BY: W GERHOLD
CHECKED BY: H. RIAD
SHEET 41 OF 66

STATE OF VERMONT
AGENCY OF TRANSPORTATION

REINFORCING STEEL SCHEDULE

ITEM	EACH	SIZE	LENGTH	MARK	TYPE	A	B	C	D	E	F	G	H	J	K	R	O
	DECK																
	330	5	32'- 0"	S501.2	STR												
	65	5	52'- 0"	S502.2	STR												
	66	5	37'- 6"	S503.2	STR												
✳	67	5	30'- 0"	S504.2	STR												
	25	5	37'- 2"	S505.2	STR												
	25	5	39'- 4"	S506.2	STR												
	330	6	32'- 0"	S601.2	STR												
	65	6	52'- 0"	S602.2	STR												
	66	6	35'- 6"	S603.2	STR												
✳	67	6	32'- 0"	S604.2	STR												
✳	11	11	32'- 0"	S1101.2	STR												
	471	5	5'- 9"	S507.2	S5	1'- 0"	1'- 2"	1'- 5"	1'- 2"			1'- 0"					
	PIER COLUMN																
	1	6	1022'- 8"	P601.2	SPIRAL	5'- 4"	3.5"	16'- 4"	56								
	2	6	17'- 3"	P602.2	T3										6"		5'- 4"
✳	27	11	9'- 0"	P1101.2	STR												
	26	11	18'- 0"	P1102.2	STR												
	ABUTMENT 1																
	19	6	2'- 8"	1A601.2	STR												
	16	6	17'- 6"	1A602.2	STR												
	78	5	9'- 0"	1A501.2	17		2'- 9"	3'- 6"	2'- 9"								
	40	5	6'- 9"	1A502.2	17		2'- 9"	1'- 2"	2'- 9"								
	33	6	7'- 2"	1A604.2	22		5'- 8"	5'- 0"					3'- 4"		4'- 7"		
	33	6	9'- 2"	1A605.2	17		3'- 9"	9'- 2"									
	ABUTMENT 2																
	19	6	2'- 8"	2A601.2	STR												
	16	6	17'- 6"	2A602.2	STR												
	78	5	9'- 0"	2A501.2	17		2'- 9"	3'- 6"	2'- 9"								
	40	5	6'- 9"	2A502.2	17		2'- 9"	1'- 2"	2'- 9"								
	33	6	7'- 2"	2A604.2	22		5'- 8"	5'- 0"					3'- 4"		4'- 7"		
	33	6	9'- 2"	2A605.2	17		5'- 0"	9'- 2"									

~ NOTES ~

1. UNLESS OTHERWISE DESIGNATED, ALL BAR REINFORCEMENT FOR CONCRETE IN SIZES UP TO AND INCLUDING NO. 18 SHALL CONFORM TO THE REQUIREMENTS OF THE "SPECIFICATIONS FOR DEFORMED BILLET-STEEL BARS FOR CONCRETE REINFORCEMENT", AASHTO M 31 (ASTM A 615-SI). ALL BARS SHALL BE GRADE 60, UNLESS OTHERWISE DESIGNATED.
2. FOR TYPICAL BENDING DETAILS, RECOMMENDED PIN DIAMETER "D" OF BENDS AND HOOKS, AND OTHER STANDARD PRACTICE, SEE CURRENT CONCRETE REINFORCING STEEL INSTITUTE "MANUAL OF STANDARD PRACTICE".
3. BARS WHICH REQUIRE MORE ACCURATE BENDING THAN STANDARD PRACTICES SHOULD HAVE LIMITS INDICATED.
4. ALL DIMENSIONS ARE OUT TO OUT OF BAR EXCEPT "A" AND "G" ON STANDARD 180 DEGREE AND 135 DEGREE HOOKS.
5. "J" DIMENSION ON 180 DEGREE HOOKS TO BE SHOWN ONLY WHERE NECESSARY TO RESTRICT HOOK SIZE. OTHERWISE, STANDARD HOOKS ARE TO BE USED.
6. "H" DIMENSION ON STIRRUPS TO BE SHOWN ONLY WHEN NECESSARY TO MAINTAIN CLEARANCES.
7. WHERE SLOPE DIFFERS FROM 45 DEGREES, DIMENSIONS "H" AND "K" MUST BE SHOWN.
8. ▲ DENOTES BARS TO BE CUT IN FIELD.
9. ✳ DENOTES ONE EXTRA BAR ADDED FOR TESTING PURPOSES.
10. △ DENOTES TWO EXTRA BARS ADDED FOR TESTING PURPOSES.
11. E IN BAR MARK PREFIX DENOTES EPOXY COATED REINFORCING STEEL.

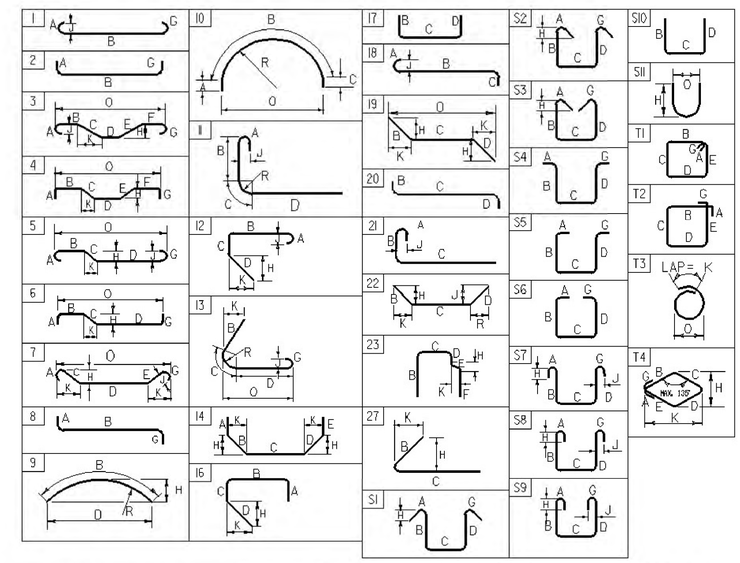

ASTM STANDARD REINFORCING BARS

BAR SIZE DESIGNATION	WEIGHT POUNDS PER FOOT	NOMINAL DIMENSIONS ROUND SECTION		
		DIAMETER INCHES	AREA INCHES ^{2}	PERIMETER INCHES
#3	0.376	0.375	0.11	1.178
#4	0.668	0.500	0.20	1.571
#5	1.043	0.625	0.31	1.963
#6	1.502	0.750	0.44	2.356
#7	2.044	0.875	0.60	2.749
#8	2.670	1.000	0.79	3.142
#9	3.400	1.128	1.00	3.544
#10	4.303	1.270	1.27	3.990
#11	5.313	1.410	1.56	4.430
#14	7.65	1.693	2.25	5.32
#18	13.60	2.257	4.00	7.09

~ REINFORCING STEEL CORROSION RESISTANCE LEVEL ~

THE REINFORCING STEEL MARKS IN THIS SCHEDULE INDICATE THE REQUIRED BAR CORROSION RESISTANCE LEVEL. CORROSION RESISTANCE LEVEL IS DENOTED WITH A .2 FOR LEVEL TWO SUFFIX OR .3 FOR LEVEL THREE SUFFIX, .1 FOR LEVEL ONE IS TO BE OMITTED. THE BAR MATERIAL TYPE AND BAR STEEL GRADE PROVIDED FOR EACH CORROSION LEVEL WILL BE RECORDED ON THE PLAN SET PI SHEET FOR AS-BUILT RECORD PLAN ARCHIVES.

PROJECT NAME: **NEW HAVEN**
PROJECT NUMBER: **BRF 0183 (1)**

FILE NAME: **52545TSK01_engreinf.xls**
PROJECT MANAGER: **G.K. DONINGTON**
DESIGNED BY: **K. JAMES**
REINFORCING STEEL SCHEDULE

PLOT DATE: **3/13/2015**
DRAWN BY: **W. GERHOLD**
CHECKED BY: **A. STOCKIN**
SHEET **42** OF **66**

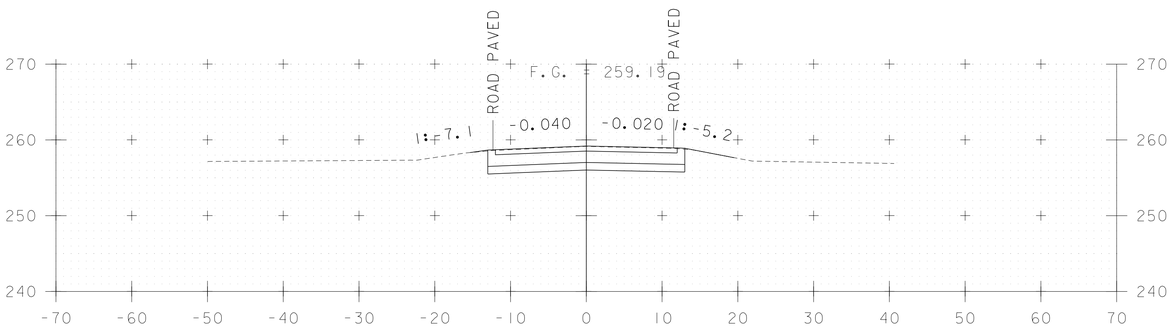

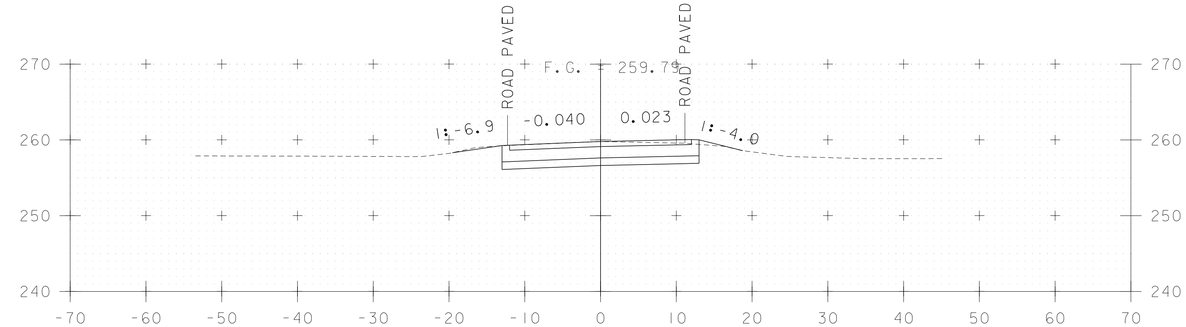

STA 500+00
END APPROACH
BEGIN PROJECT
BRF 0183 (1)

500+00

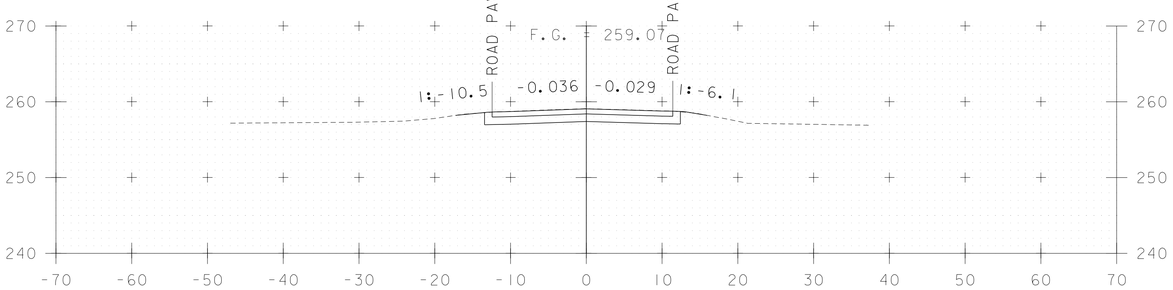

500+75

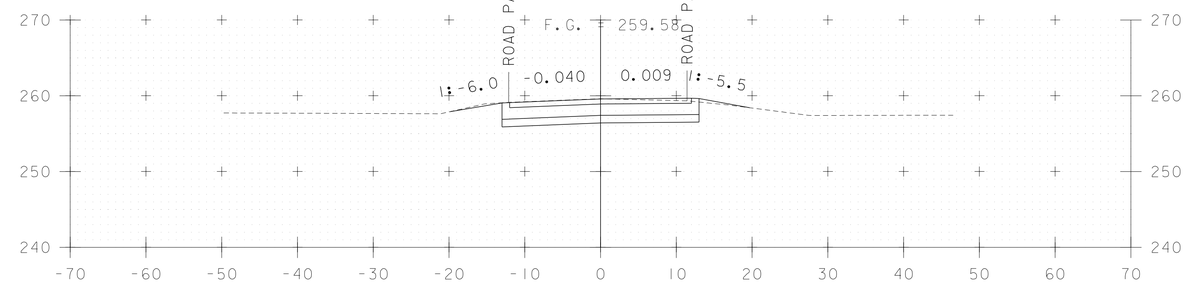

499+75

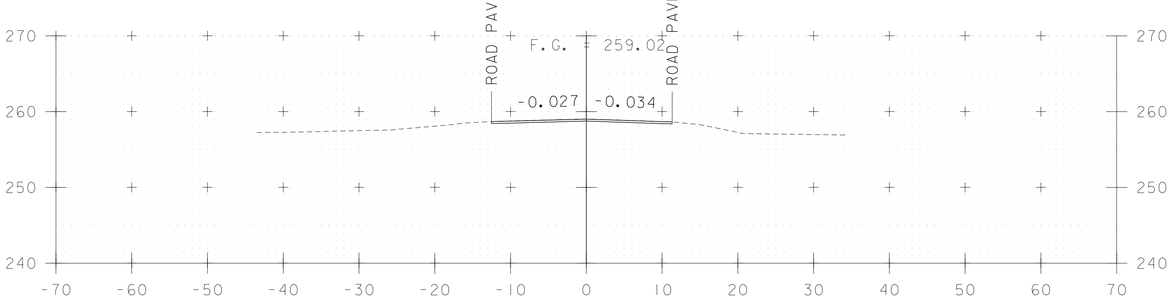

500+50

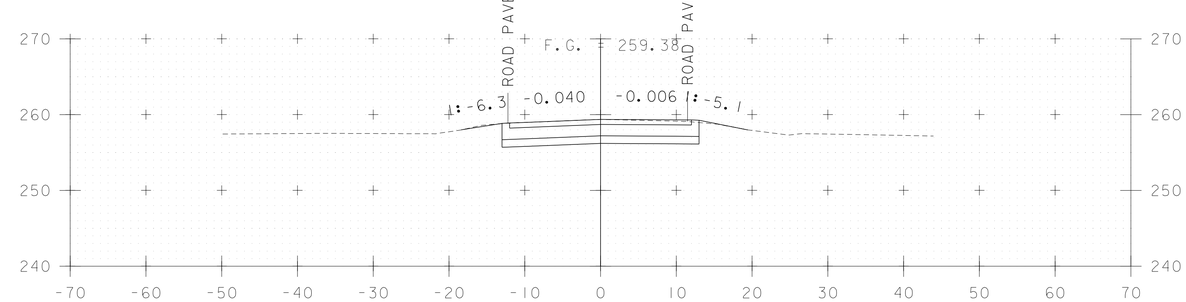

STA 499+50
BEGIN APPROACH
MATCH EXISTING CROSS-SLOPES

499+50

500+25

STA. 500+00 - STA. 500+75

PROJECT NAME: NEW HAVEN	
PROJECT NUMBER: BRF 0183 (1)	
FILE NAME: z10j070xsl.dgn	PLOT DATE: 13-MARCH-2015
PROJECT LEADER: K DONINGTON	DRAWN BY: P ARMANO
DESIGNED BY: P ARMANO	CHECKED BY: R BENJAMIN
MAINLINE CROSS SECTIONS	SHEET 43 OF 66

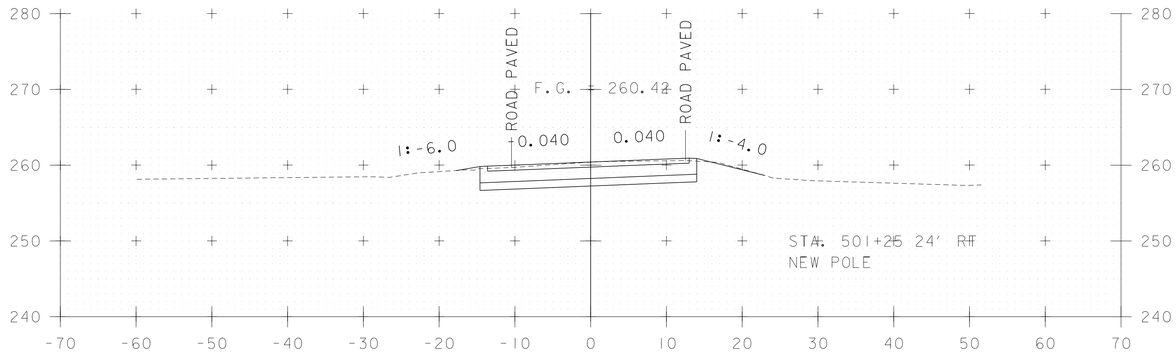

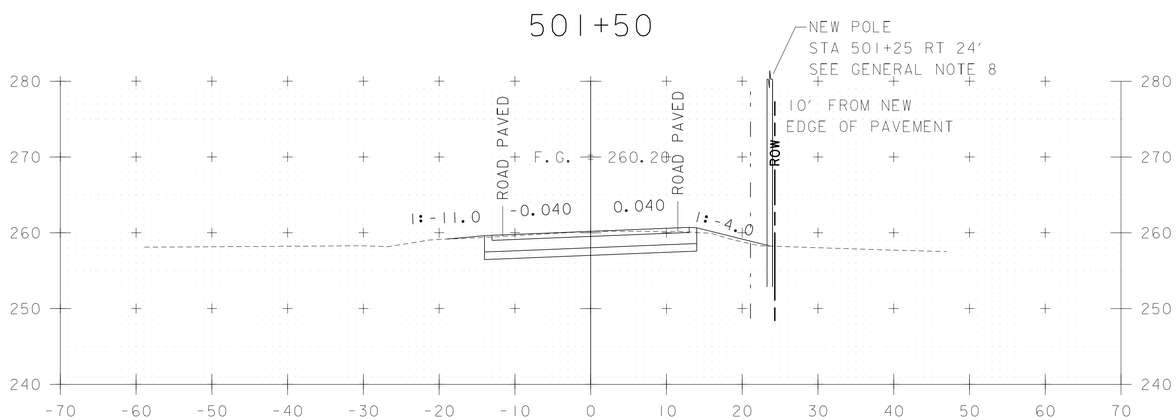

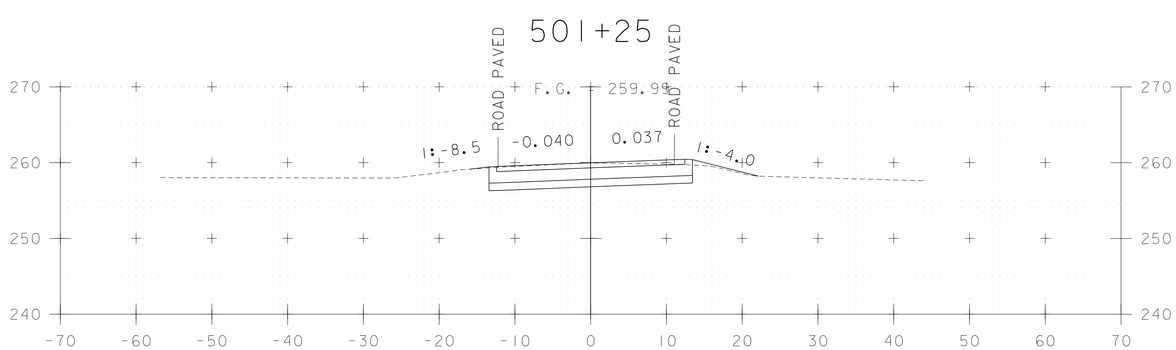

501+00

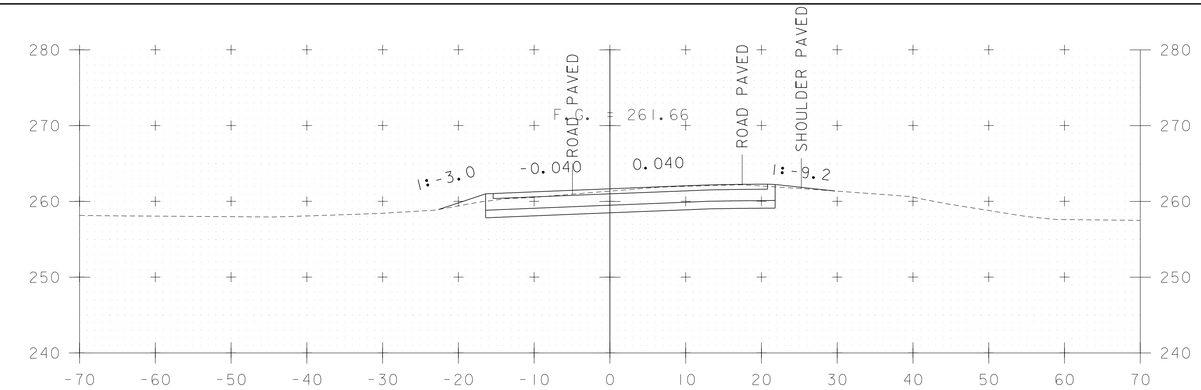

502+25

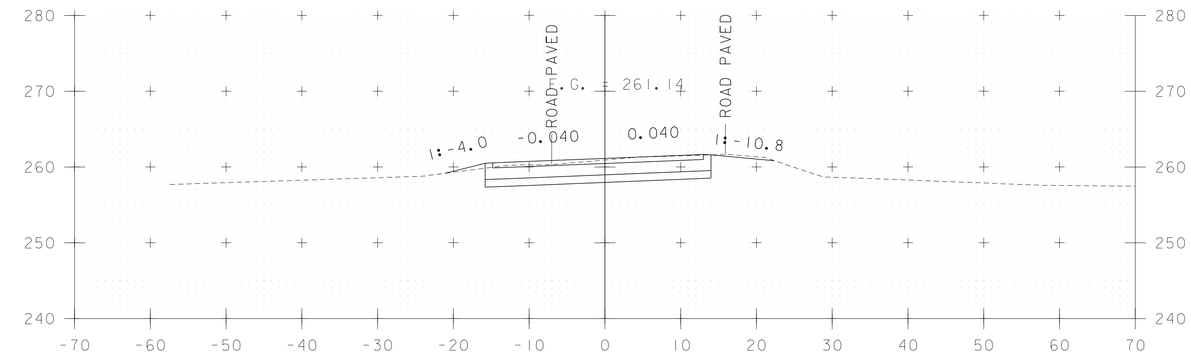

502+00

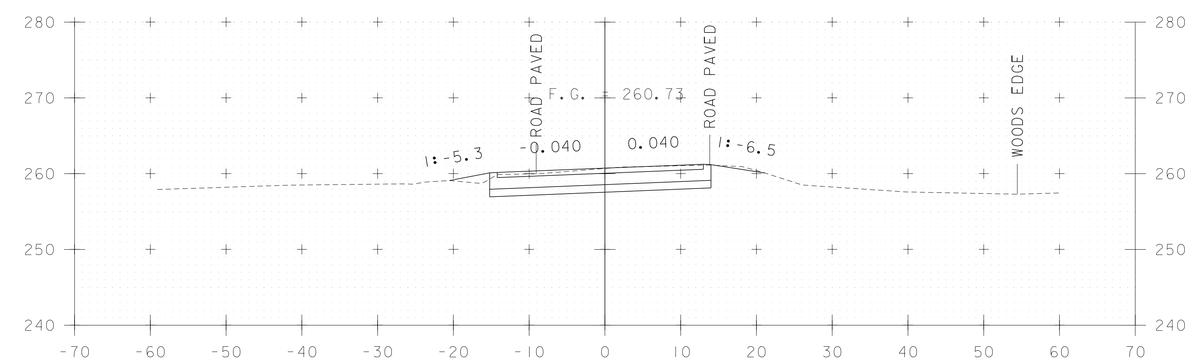

501+75

STA. 501+00 - STA. 502+25

PROJECT NAME: NEW HAVEN	
PROJECT NUMBER: BRF 0183 (1)	
FILE NAME: z10j070xsl.dgn	PLOT DATE: 13-MARCH-2015
PROJECT LEADER: K DONINGTON	DRAWN BY: P ARMANO
DESIGNED BY: P ARMANO	CHECKED BY: R BENJAMIN
MAINLINE CROSS SECTIONS	SHEET 44 OF 66

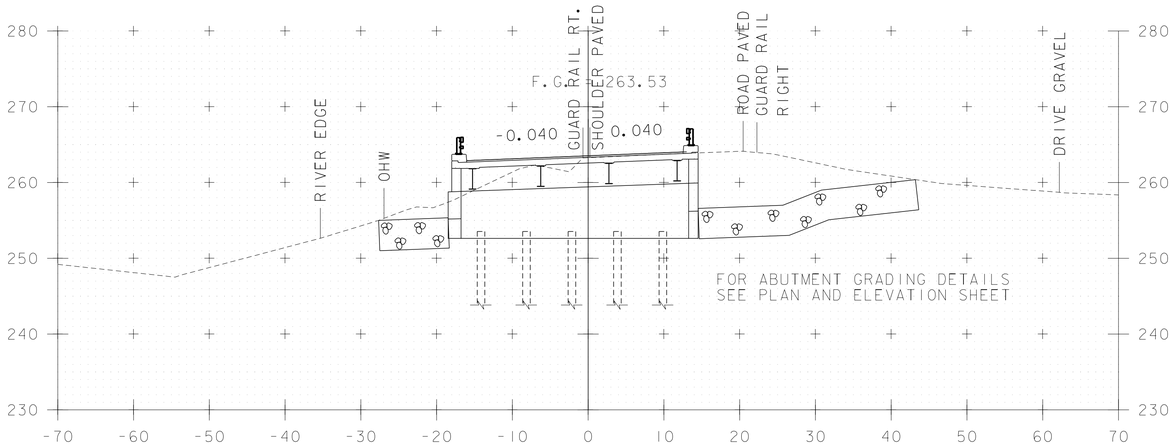

STA 502+94.80
BEGIN BRIDGE

503+00

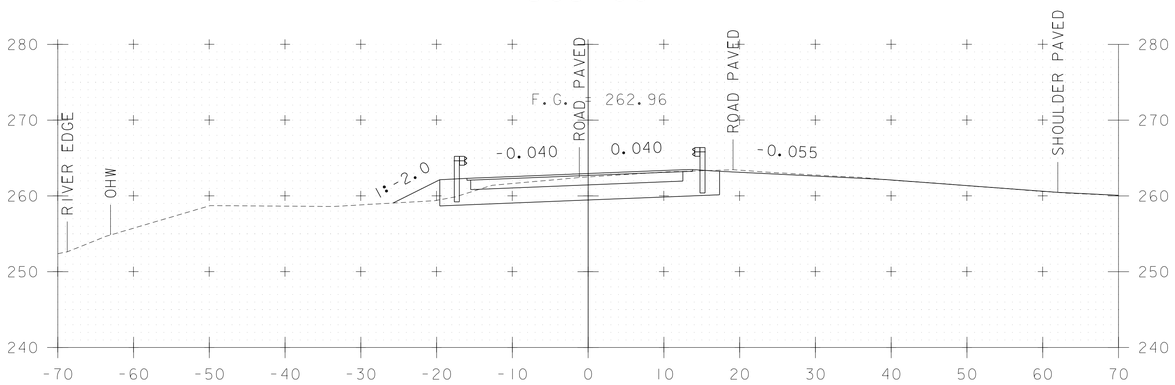

502+75

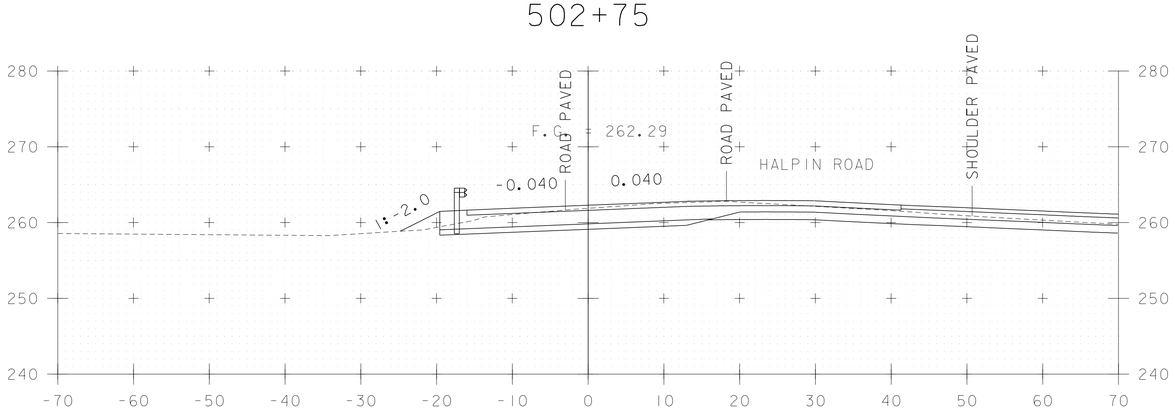

502+50

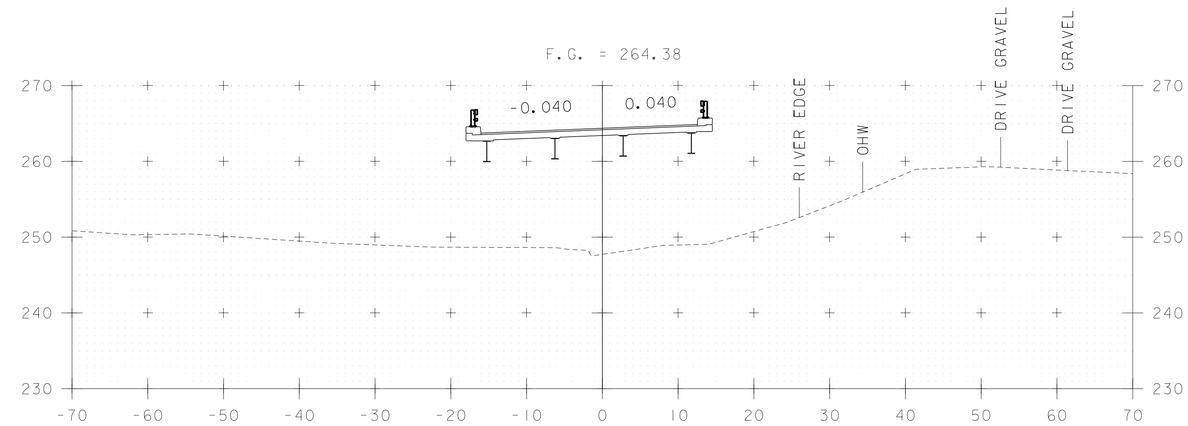

503+50

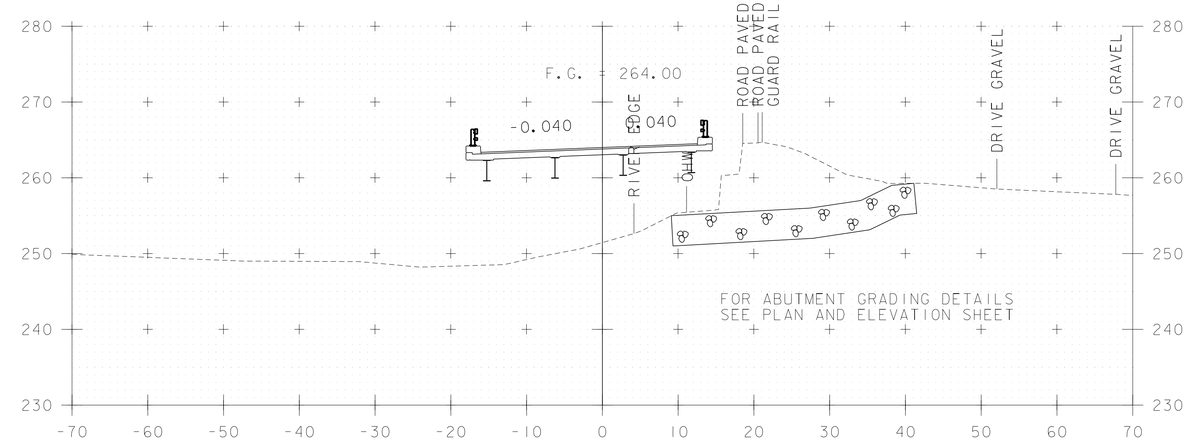

503+25

STA. 502+50 - STA. 503+50

PROJECT NAME: NEW HAVEN	
PROJECT NUMBER: BRF 0183 (1)	
FILE NAME: z10j070xsl.dgn	PLOT DATE: 13-MARCH-2015
PROJECT LEADER: K DONINGTON	DRAWN BY: P ARMANO
DESIGNED BY: P ARMANO	CHECKED BY: R BENJAMIN
MAINLINE CROSS SECTIONS	SHEET 45 OF 66

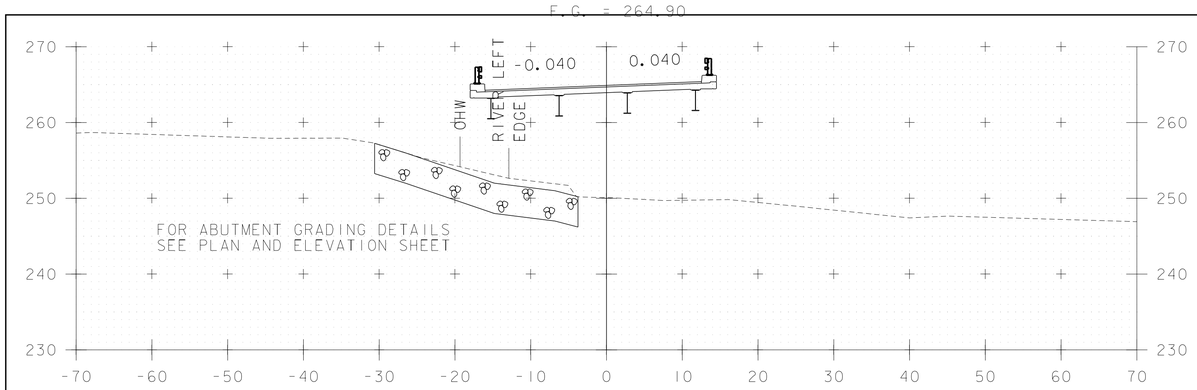

504+25

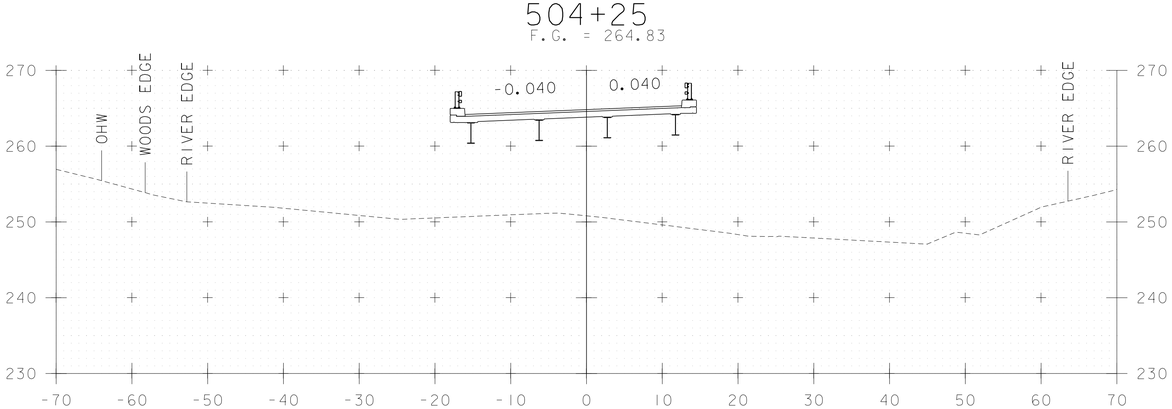

504+00

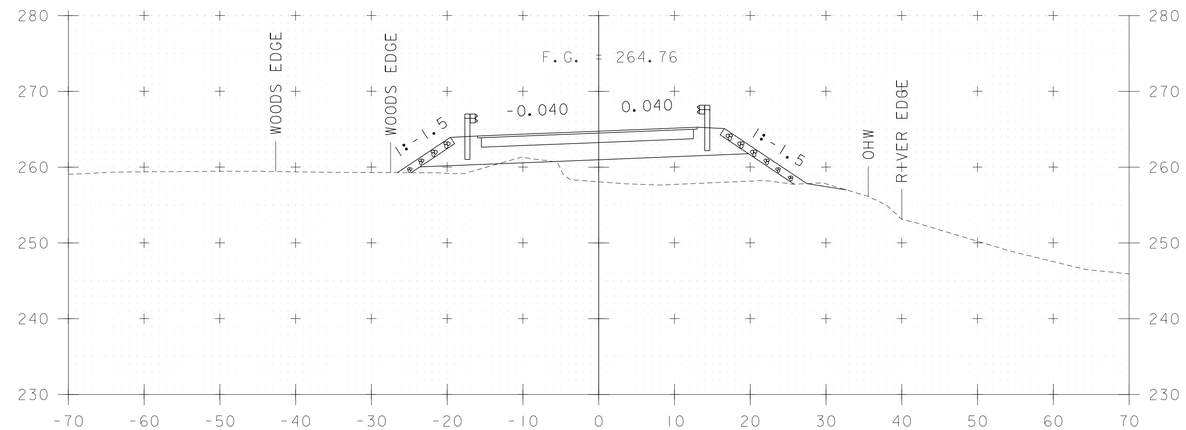

504+75

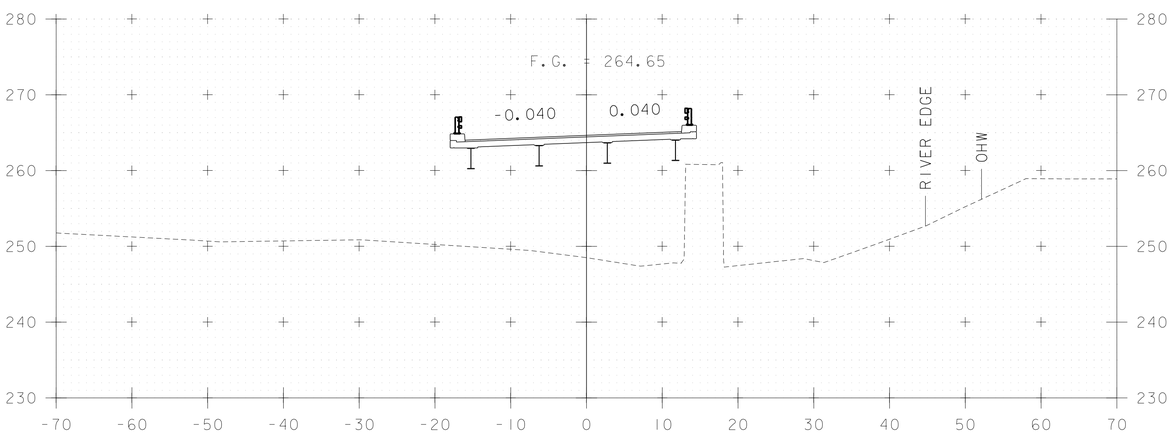

503+75

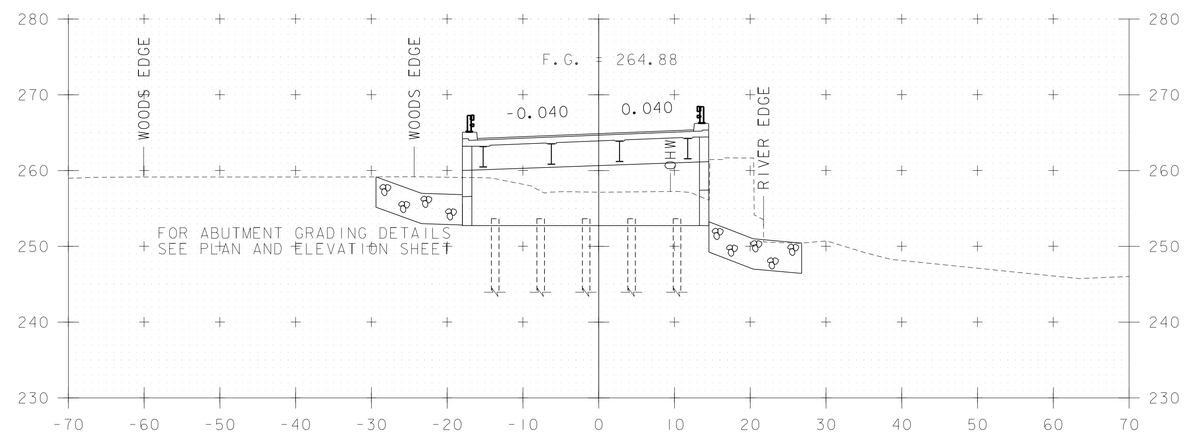

STA 504+61.82
END BRIDGE

504+50

STA. 503+75 - STA. 504+75

PROJECT NAME: NEW HAVEN	
PROJECT NUMBER: BRF 0183 (1)	
FILE NAME: z10j070xsl.dgn	PLOT DATE: 13-MARCH-2015
PROJECT LEADER: K DONINGTON	DRAWN BY: P ARMANO
DESIGNED BY: P ARMANO	CHECKED BY: R BENJAMIN
MAINLINE CROSS SECTIONS	SHEET 46 OF 66

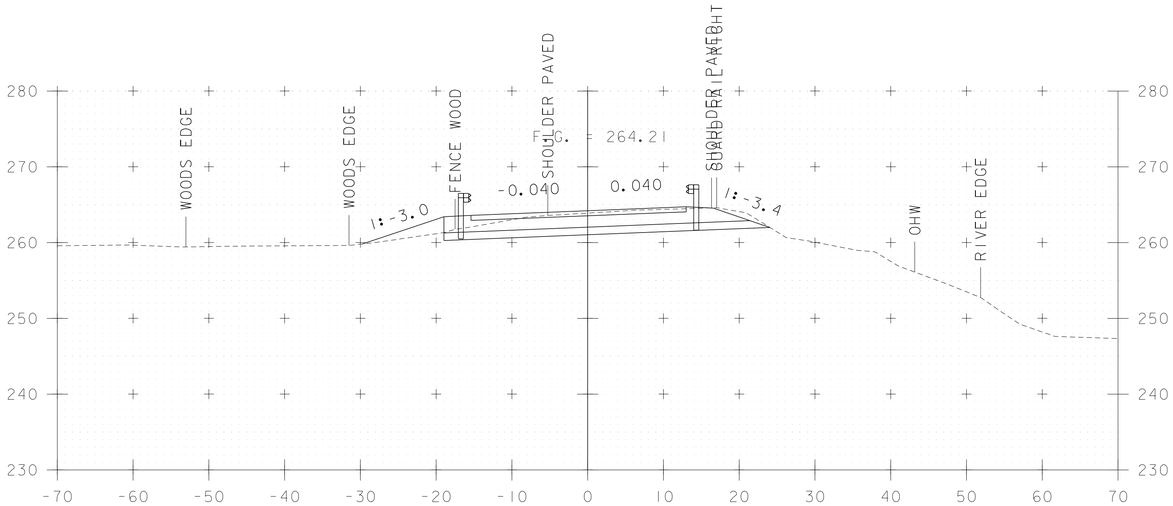

505+25

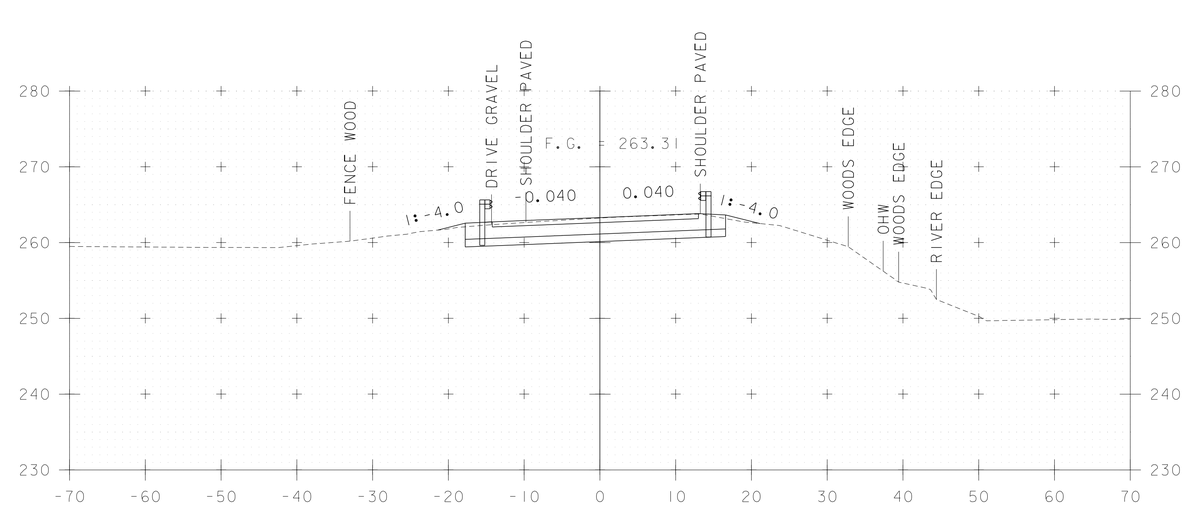

505+75

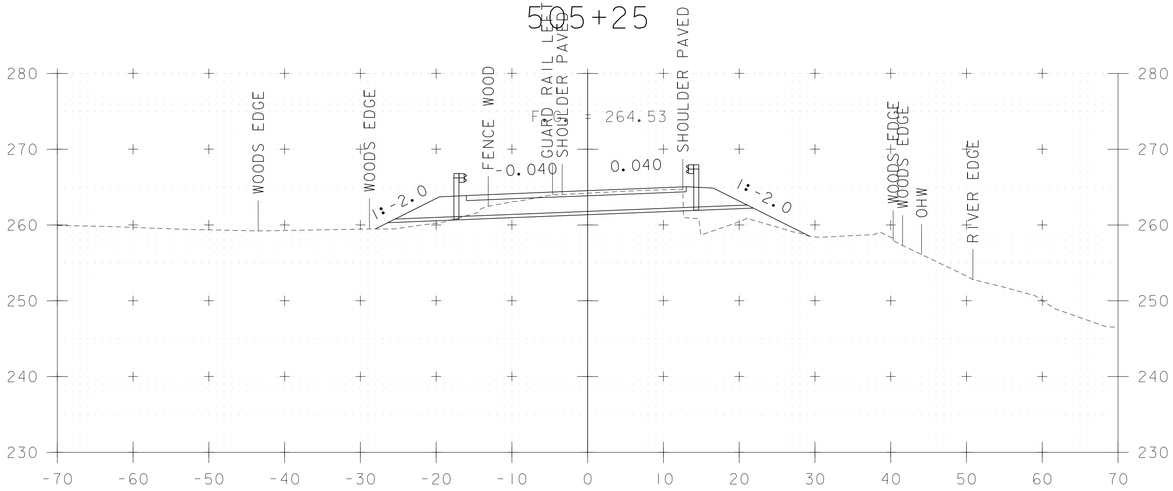

505+00

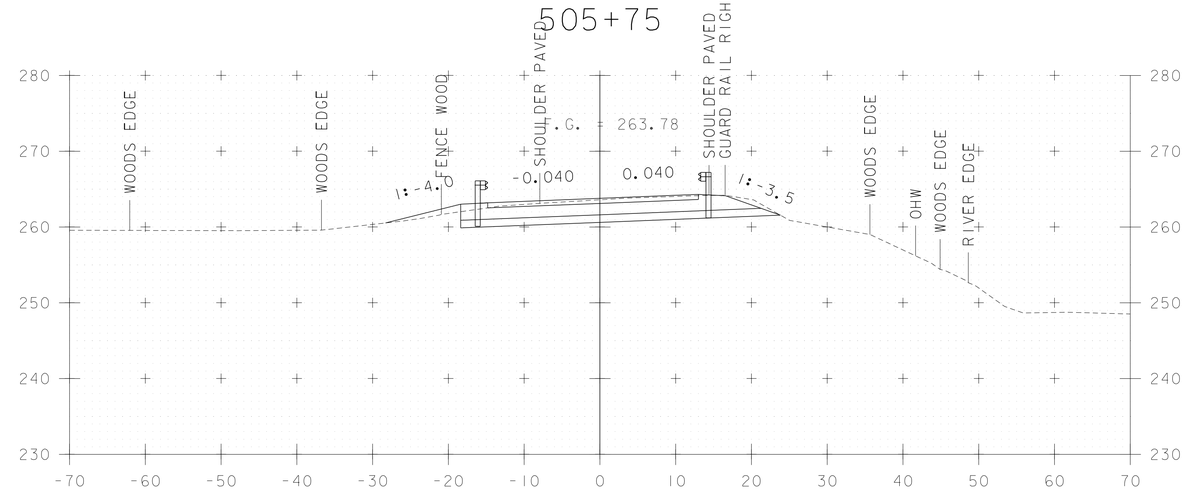

505+50

MAINLINE CROSS SECTIONS

STA. 505+00 - STA. 505+75

PROJECT NAME: NEW HAVEN	
PROJECT NUMBER: BRF 0183 (1)	
FILE NAME: z10j070xsl.dgn	PLOT DATE: 13-MARCH-2015
PROJECT LEADER: K DONINGTON	DRAWN BY: P ARMANO
DESIGNED BY: P ARMANO	CHECKED BY: R BENJAMIN
MAINLINE CROSS SECTIONS	SHEET 47 OF 66

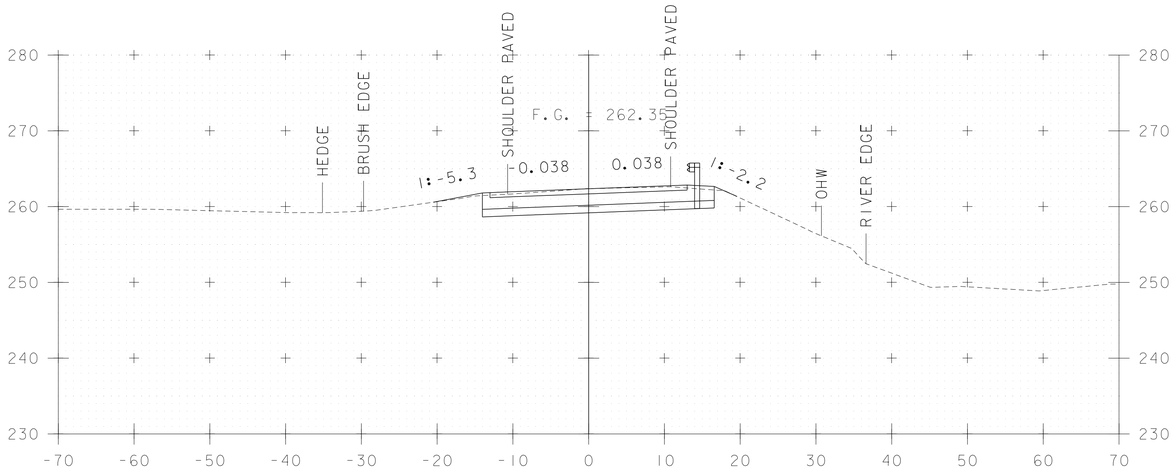

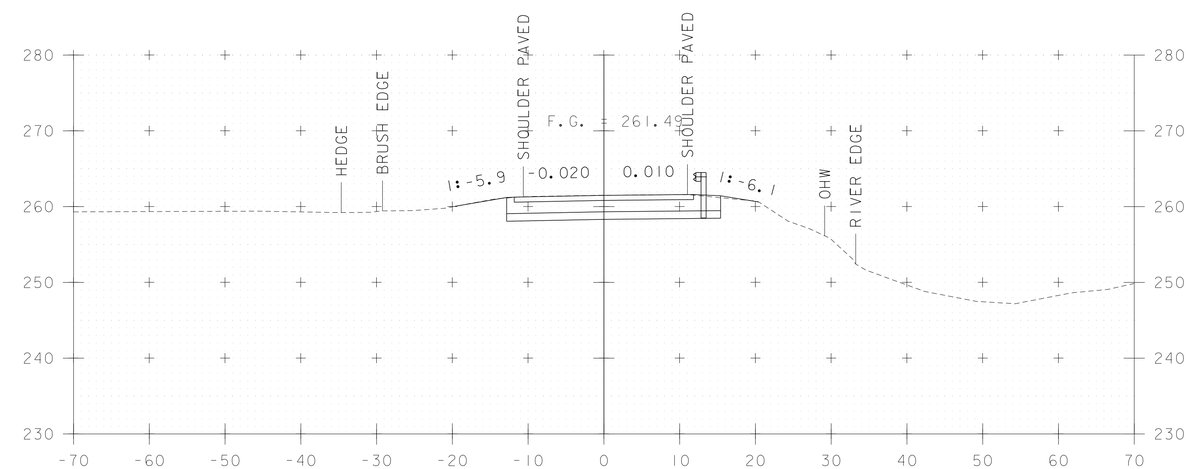

506+25

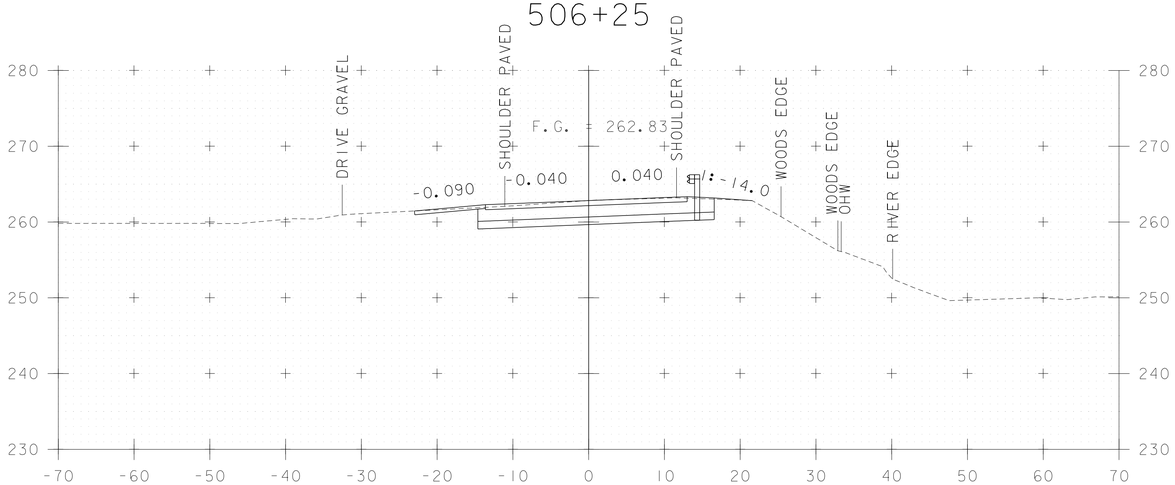

506+75

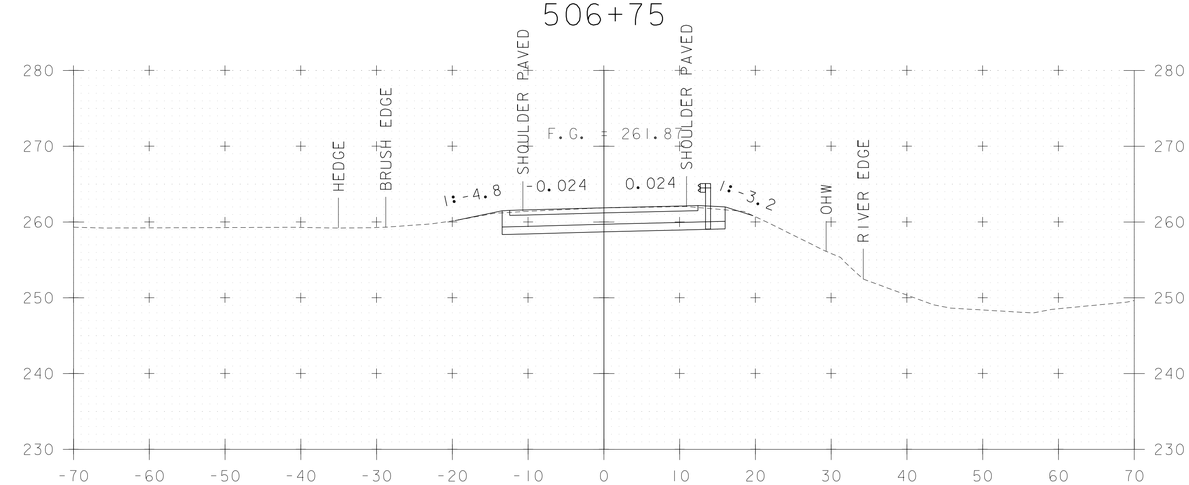

DRIVE LEFT 506+00

506+50

STA. 506+00 - STA. 506+75

PROJECT NAME: NEW HAVEN	
PROJECT NUMBER: BRF 0183 (1)	
FILE NAME: z10j070xsl.dgn	PLOT DATE: 13-MARCH-2015
PROJECT LEADER: K DONINGTON	DRAWN BY: P ARMANO
DESIGNED BY: P ARMANO	CHECKED BY: R BENJAMIN
MAINLINE CROSS SECTIONS	SHEET 48 OF 66

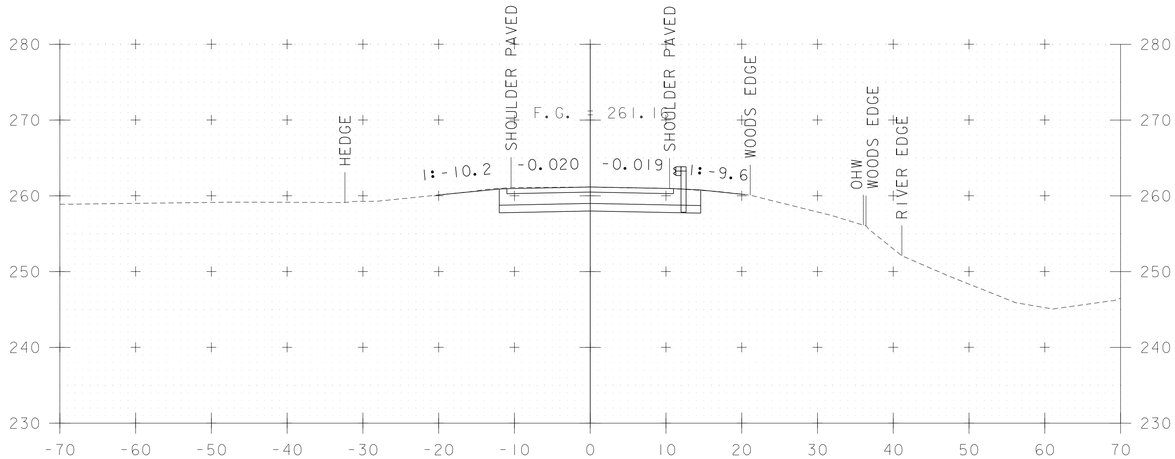

STA 507+30
END PROJECT
BRF 0183 (1)
BEGIN APPROACH

507+25

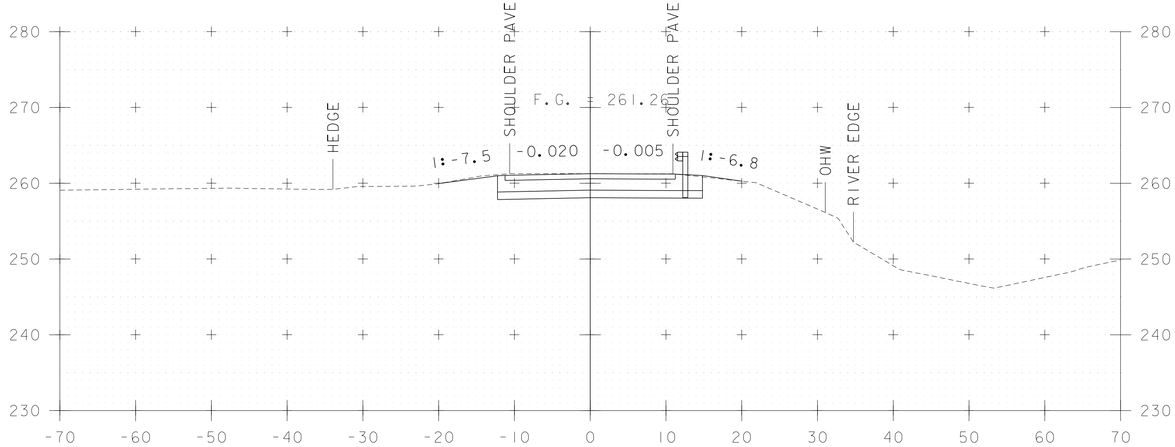

507+00

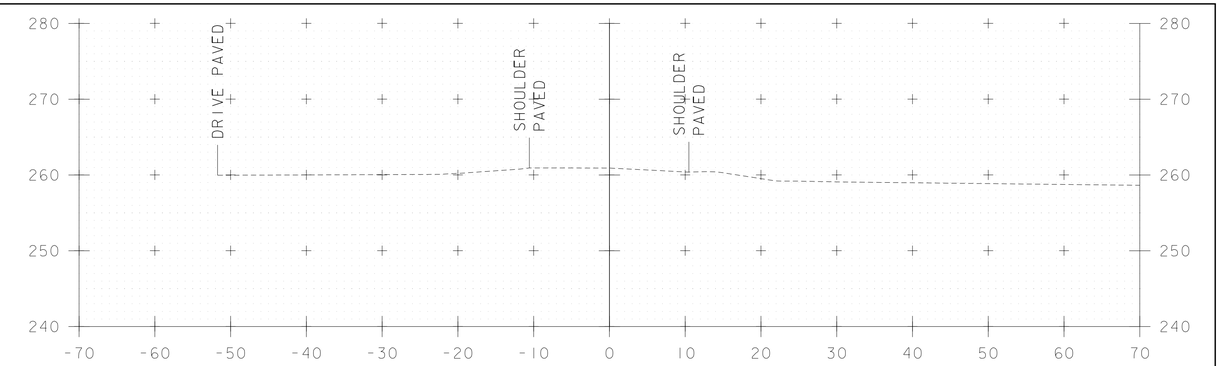

508+00

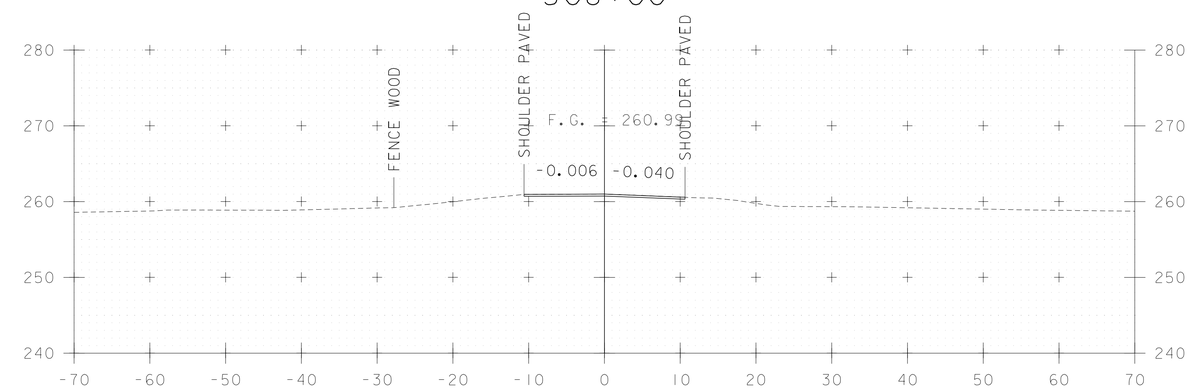

STA 507+80
END APPROACH
MATCH EXISTING CROSS-SLOPES

507+75

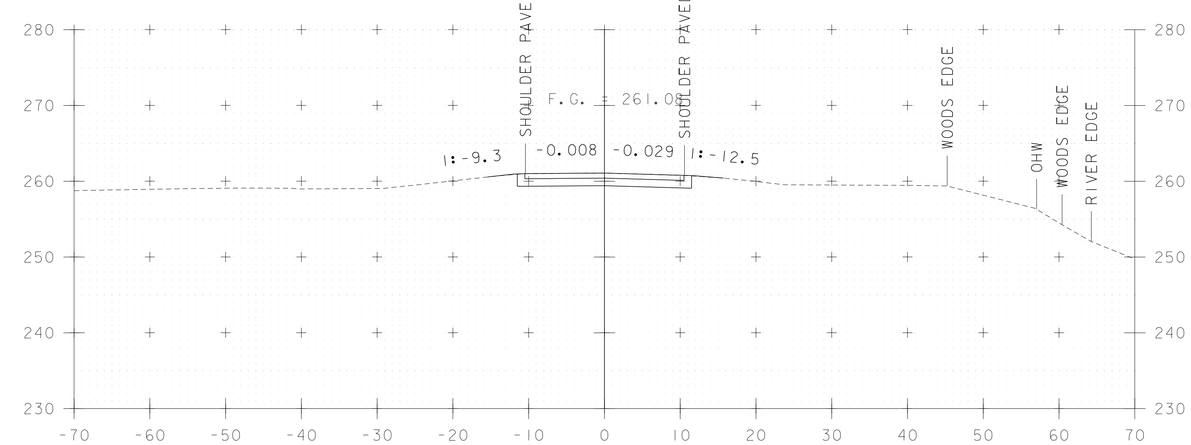

507+50

STA. 507+00 - STA. 508+00

PROJECT NAME: NEW HAVEN	
PROJECT NUMBER: BRF 0183 (1)	
FILE NAME: z10j070xsl.dgn	PLOT DATE: 13-MARCH-2015
PROJECT LEADER: K DONINGTON	DRAWN BY: P ARMANO
DESIGNED BY: P ARMANO	CHECKED BY: R BENJAMIN
MAINLINE CROSS SECTIONS	SHEET 49 OF 66

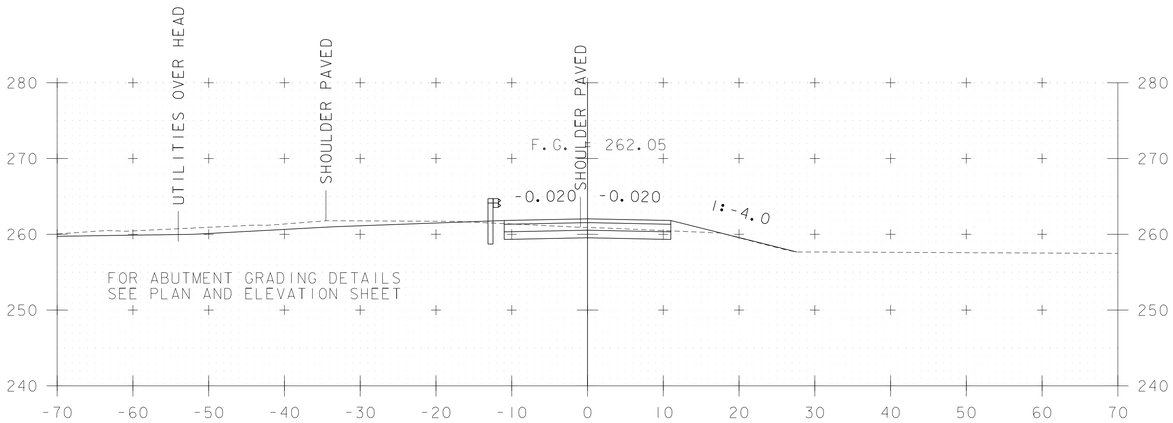

STA 100+50
END PAVED APRON

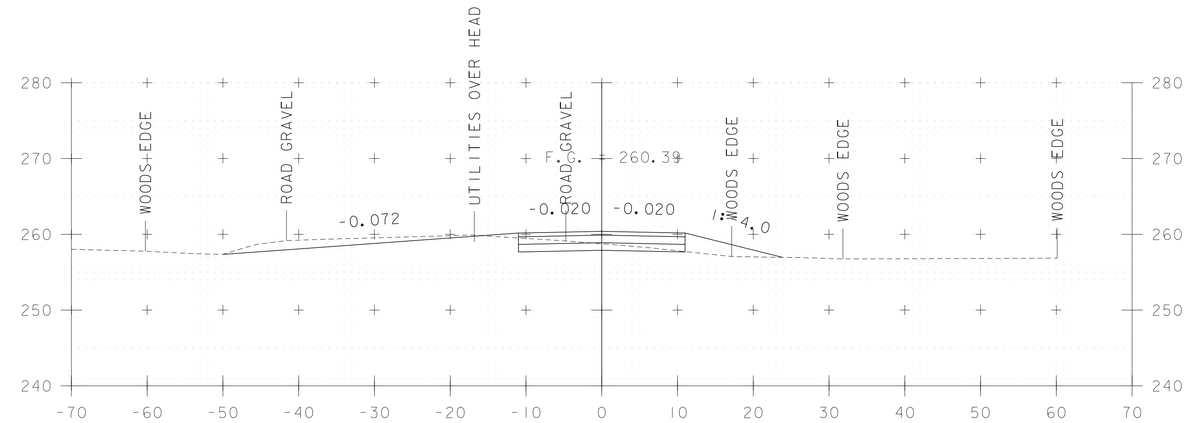

100+50

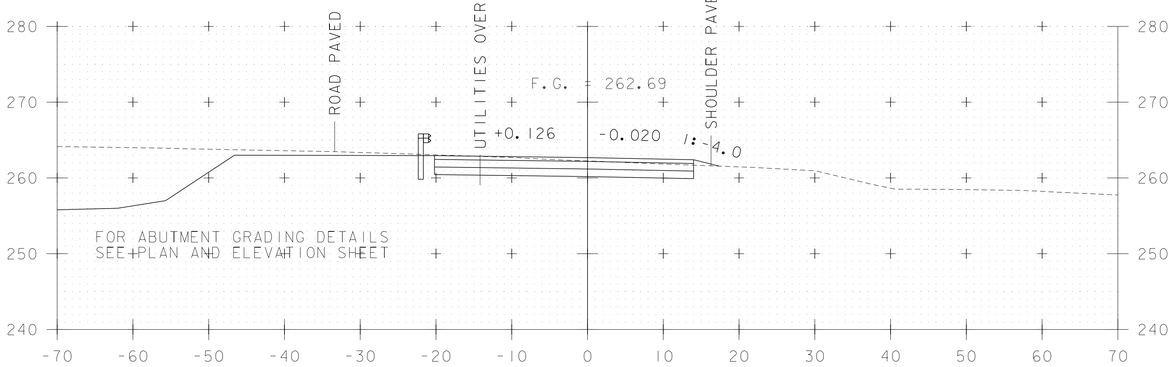

101+25

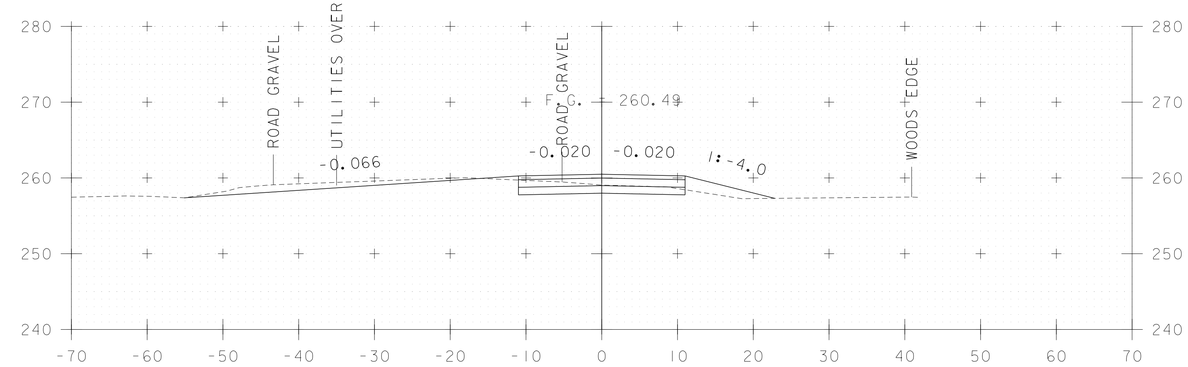

100+25

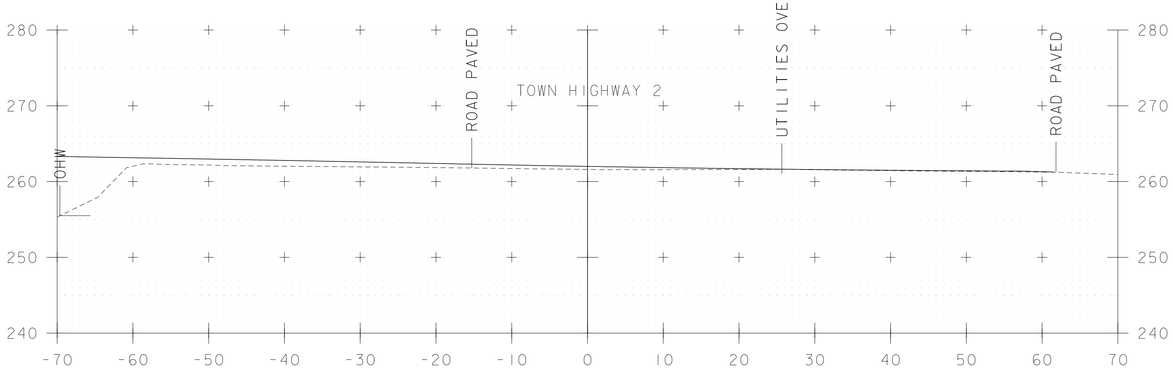

MATCH INTO EDGE OF
TOWN HIGHWAY 2
STA 100+13.23

101+00

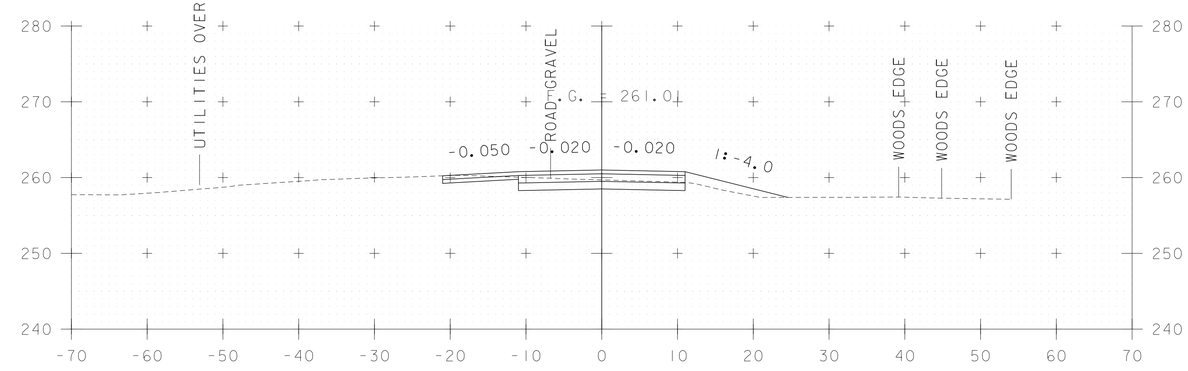

100+00

DRIVE LT

100+75

STA. 100+00 - STA. 101+25

PROJECT NAME: NEW HAVEN	
PROJECT NUMBER: BRF 0183 910	
FILE NAME: z10j070xsl.dgn	PLOT DATE: 13-MARCH-2015
PROJECT LEADER: K DONINGTON	DRAWN BY: P ARMANO
DESIGNED BY: P ARMANO	CHECKED BY: R BENJAMIN
HALPIN ROAD CROSS SECTIONS	SHEET 50 OF 66

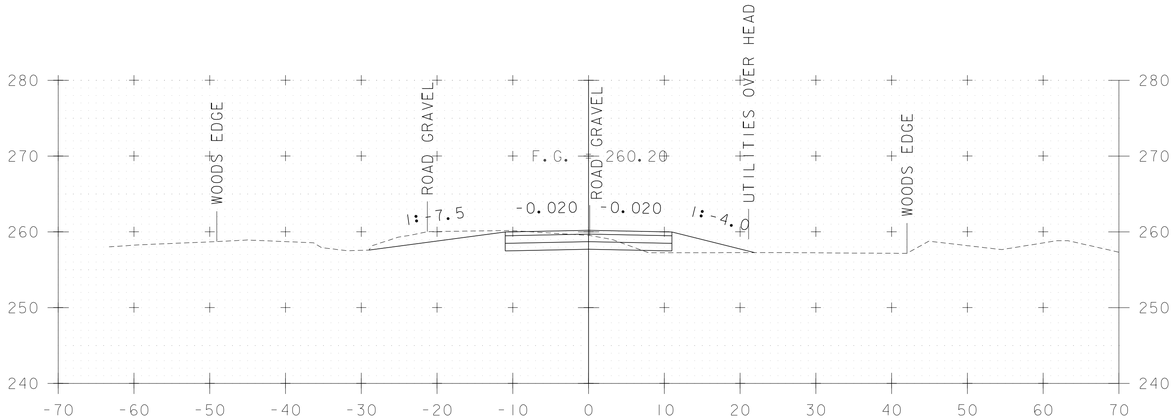

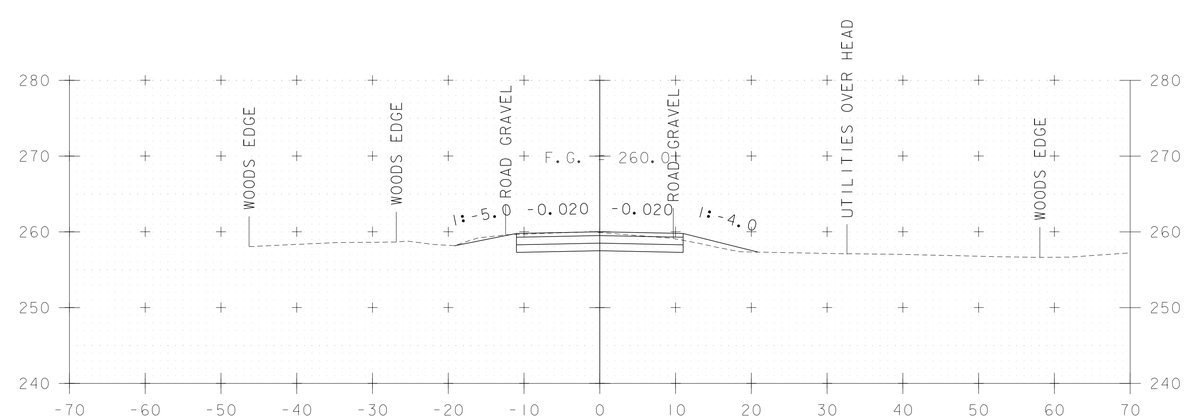

102+00

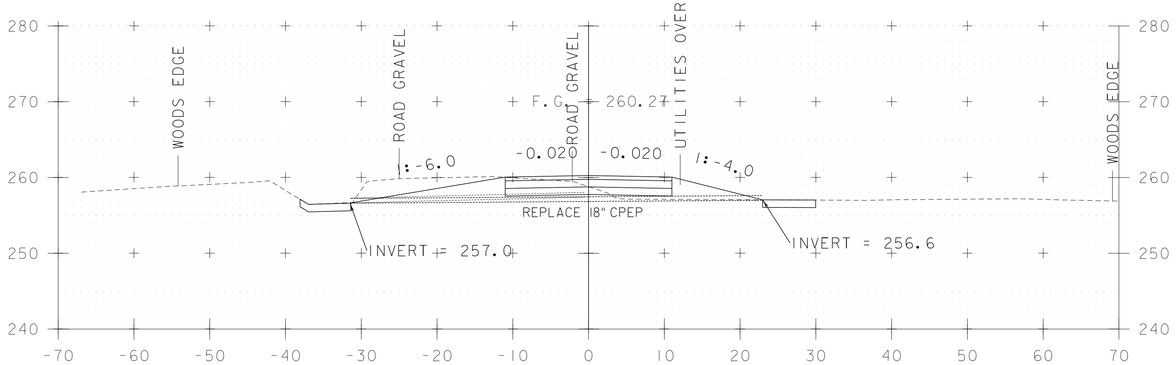

102+75

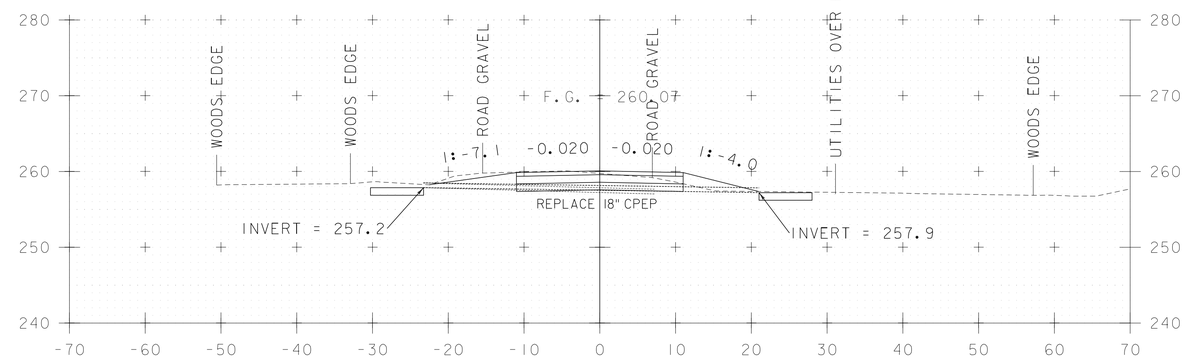

101+75

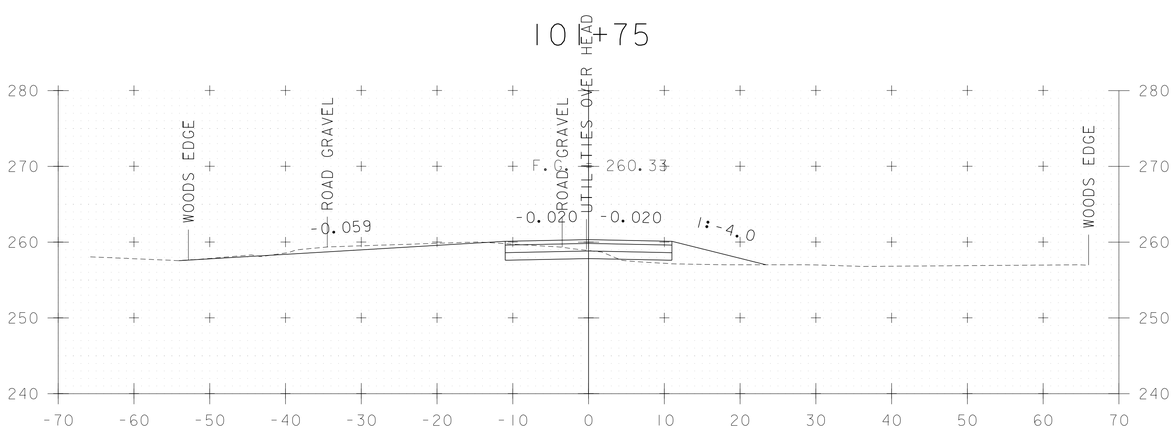

102+50

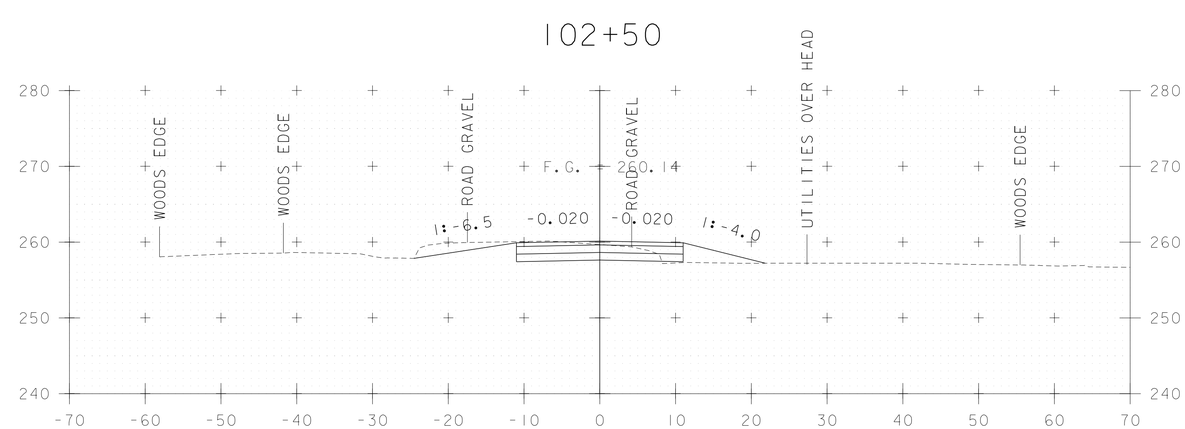

101+50

102+25

STA. 101+50 - STA. 102+75

PROJECT NAME: NEW HAVEN	
PROJECT NUMBER: BRF 0183 (1)	
FILE NAME: z10J070XS1.dgn	PLOT DATE: 13-MARCH-2015
PROJECT LEADER: K DONINGTON	DRAWN BY: P ARMANO
DESIGNED BY: P ARMANO	CHECKED BY: R BENJAMIN
HALPIN ROAD CROSS SECTIONS	SHEET 51 OF 66

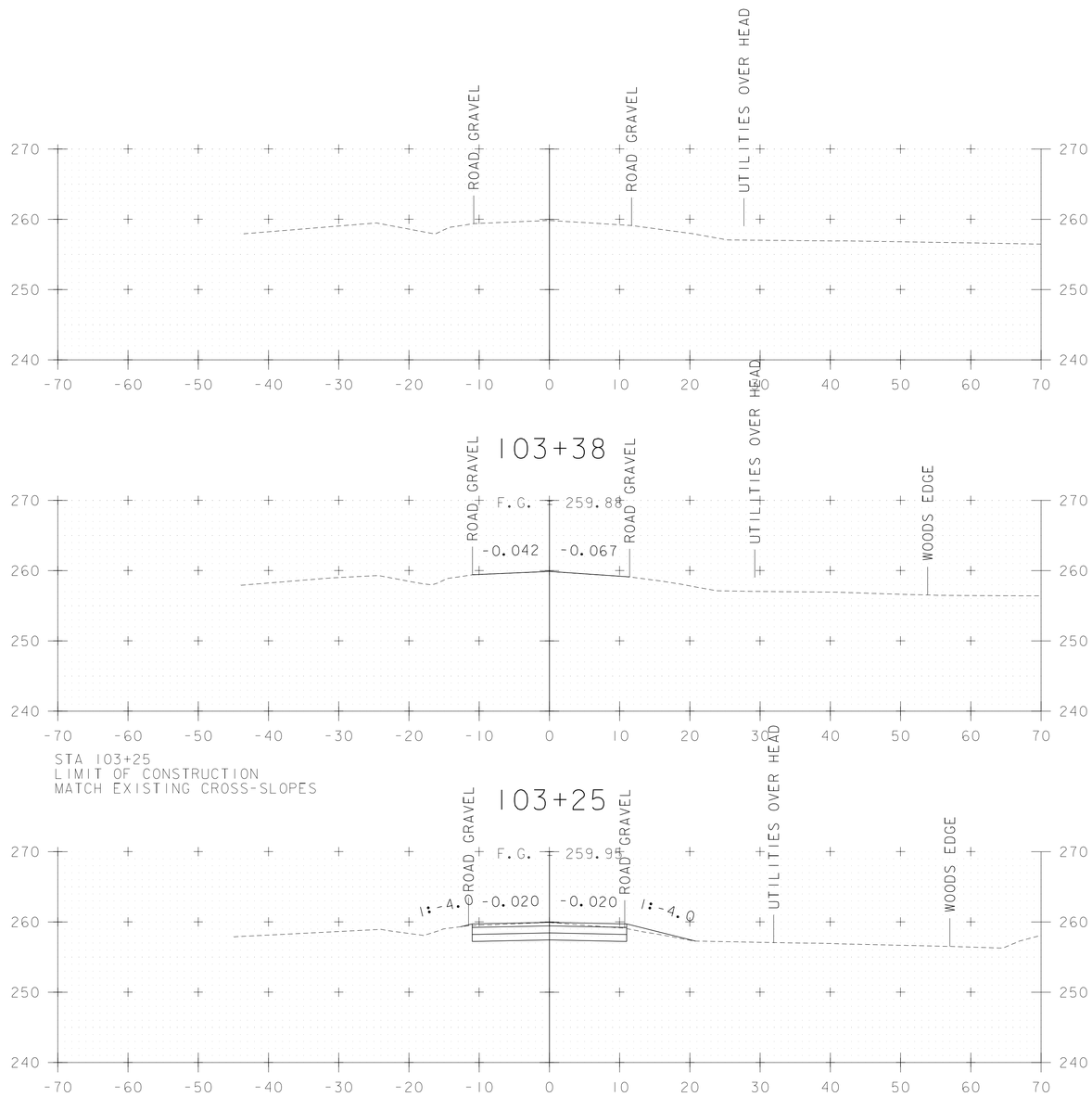

STA. 103+00 - STA. 103+38

PROJECT NAME: NEW HAVEN	
PROJECT NUMBER: BRF 0183 (1)	
FILE NAME: z10j070xsl.dgn	PLOT DATE: 13-MARCH-2015
PROJECT LEADER: K DONINGTON	DRAWN BY: P ARMANO
DESIGNED BY: P ARMANO	CHECKED BY: R BENJAMIN
HALPIN ROAD CROSS SECTIONS	SHEET 52 OF 66

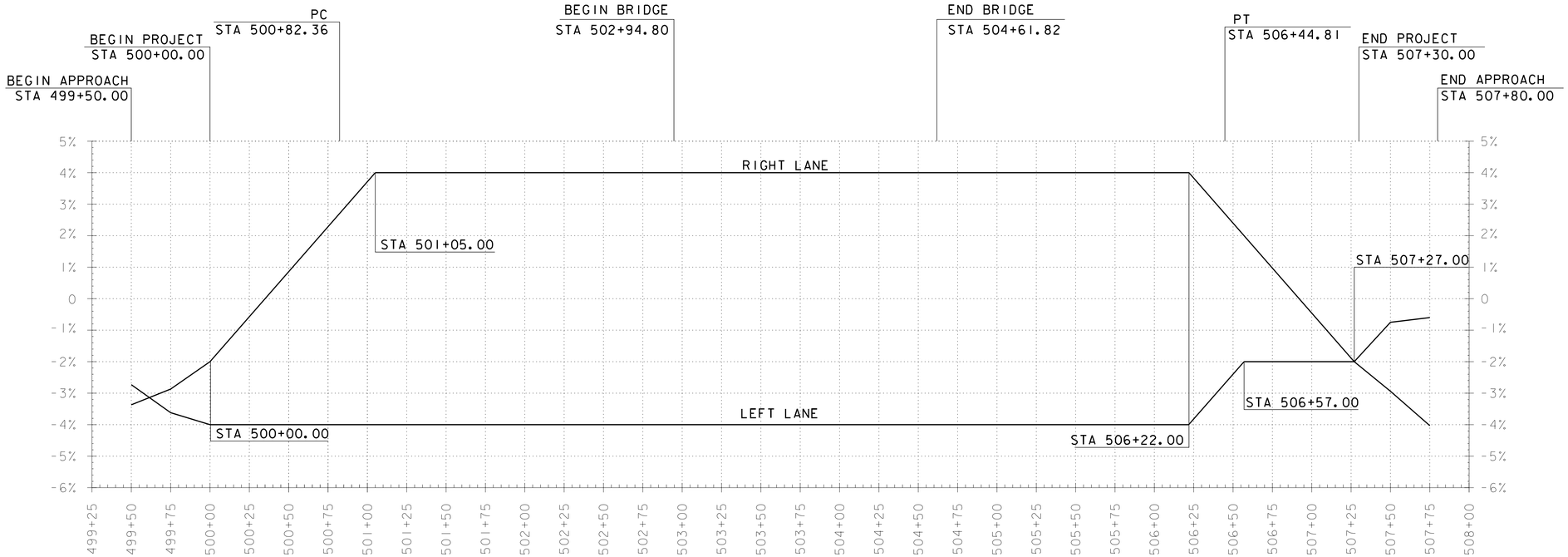

BANKING DIAGRAM

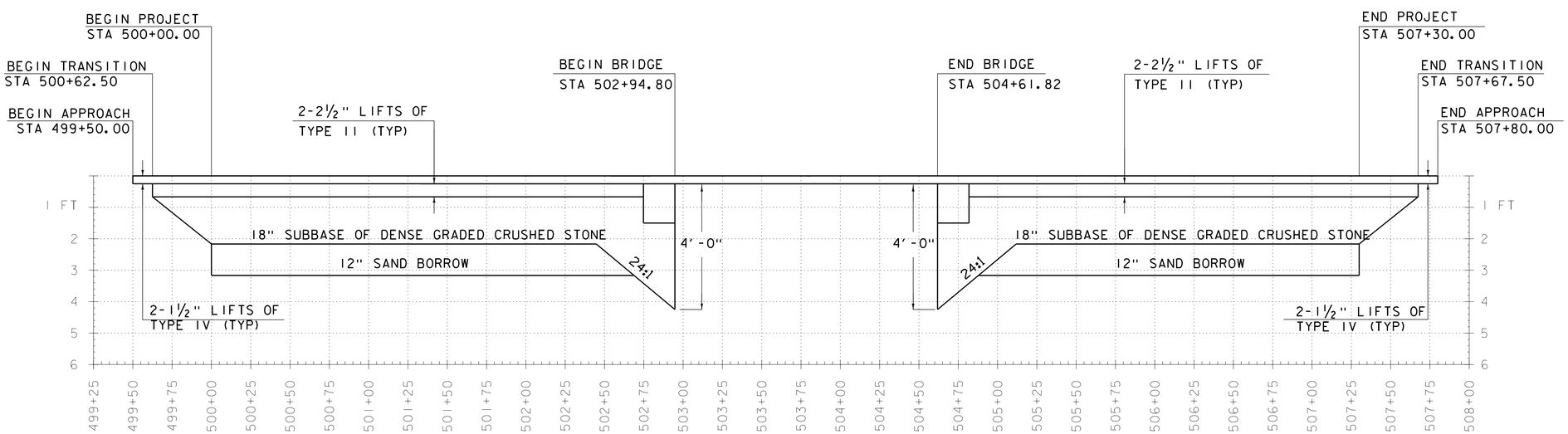

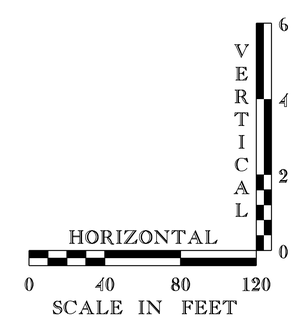

MATERIAL TRANSITIONS

PROJECT NAME: NEW HAVEN
PROJECT NUMBER: BRF 0183 (1)

PARSONS BRINCKERHOFF
650 ELM STREET
MANCHESTER, NH 03101

FILE NAME: z10j070xs2.dgn
PROJECT LEADER: K. DONINGTON
DESIGNED BY: P. ARMANO
BANKING DIAGRAM & MATERIAL TRANSITION

PLOT DATE: 15-APRIL-2014
DRAWN BY: P. ARMANO
CHECKED BY: R. BENJAMIN
SHEET 53 OF 66

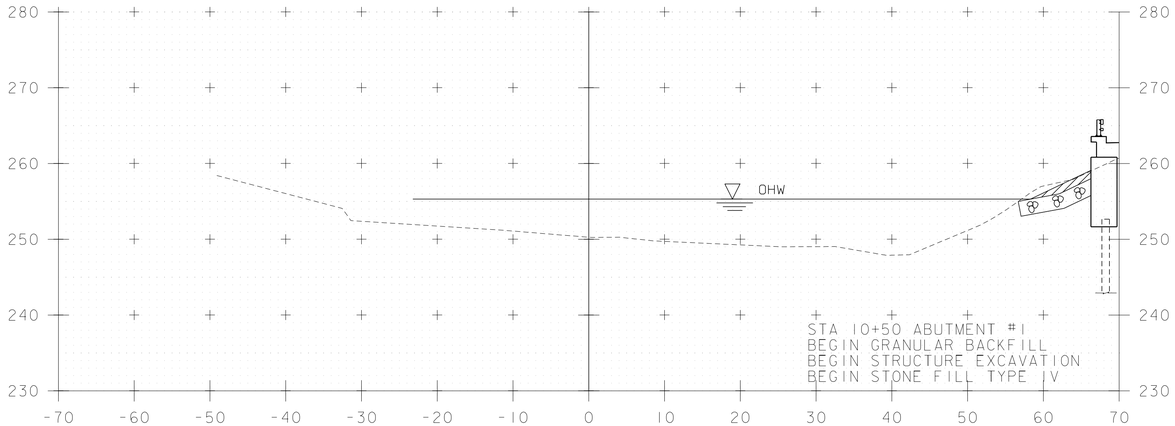

10+50

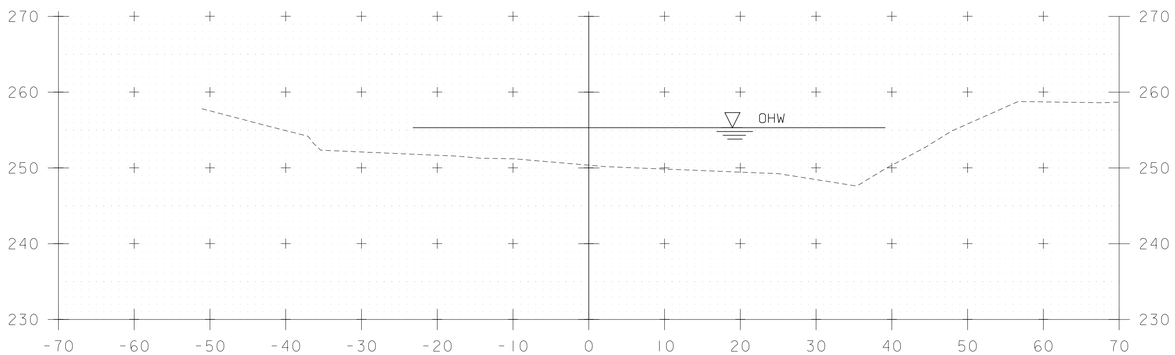

10+25

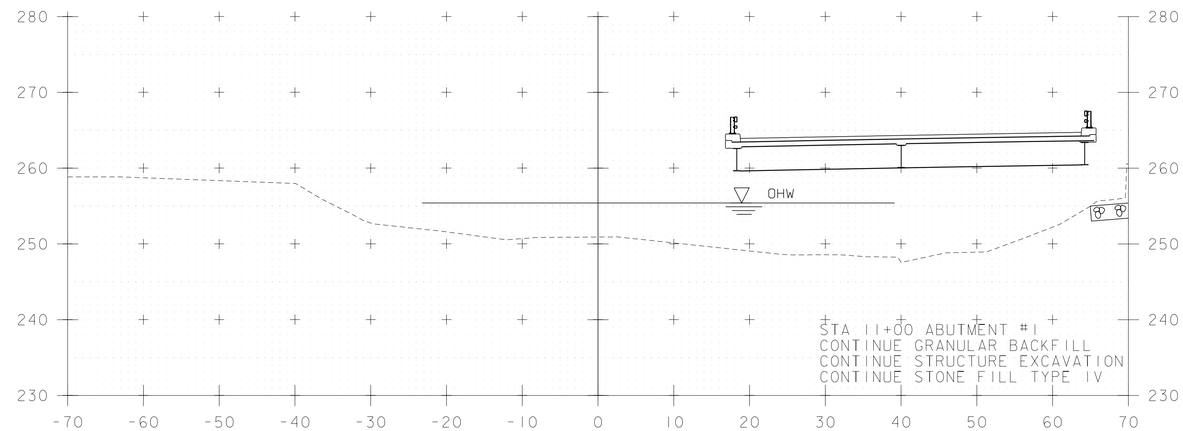

11+00

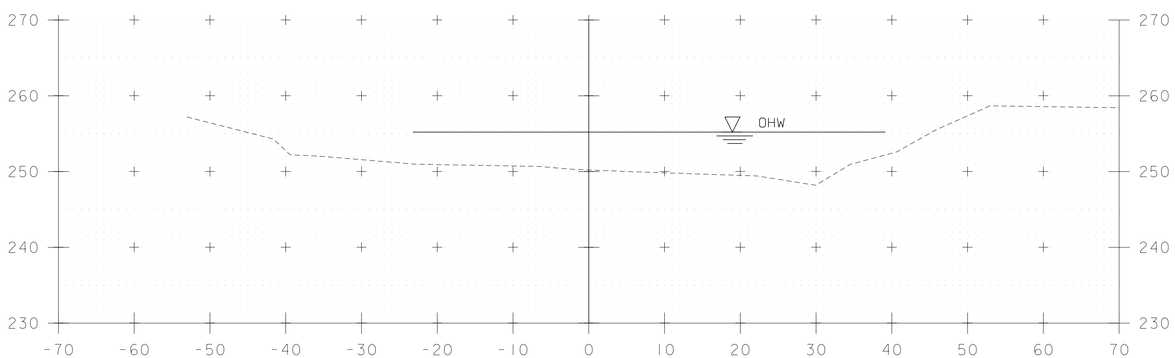

10+00

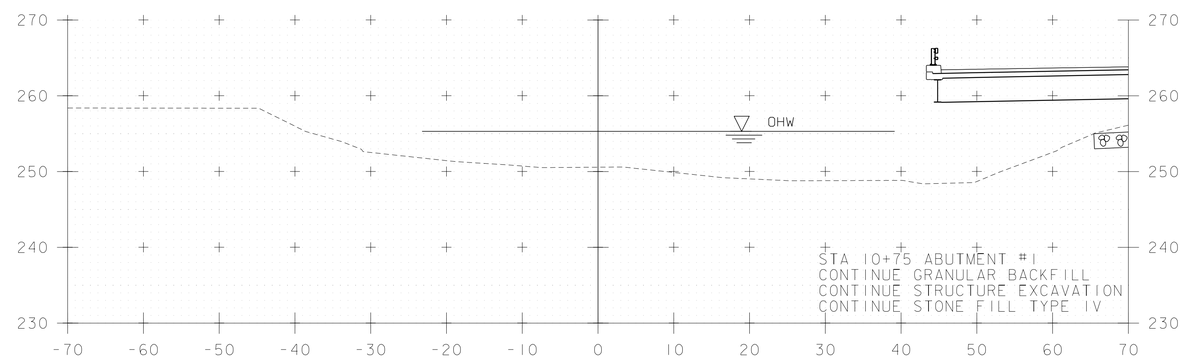

10+75

STA. 10+00 - STA. 11+00

PROJECT NAME: NEW HAVEN	
PROJECT NUMBER: BRF 0183 (1)	
FILE NAME: z10j070xsl.dgn	PLOT DATE: 13-MARCH-2015
PROJECT LEADER: K DONINGTON	DRAWN BY: P ARMANO
DESIGNED BY: P ARMANO	CHECKED BY: R BENJAMIN
CHANNEL CROSS SECTIONS	SHEET 54 OF 66

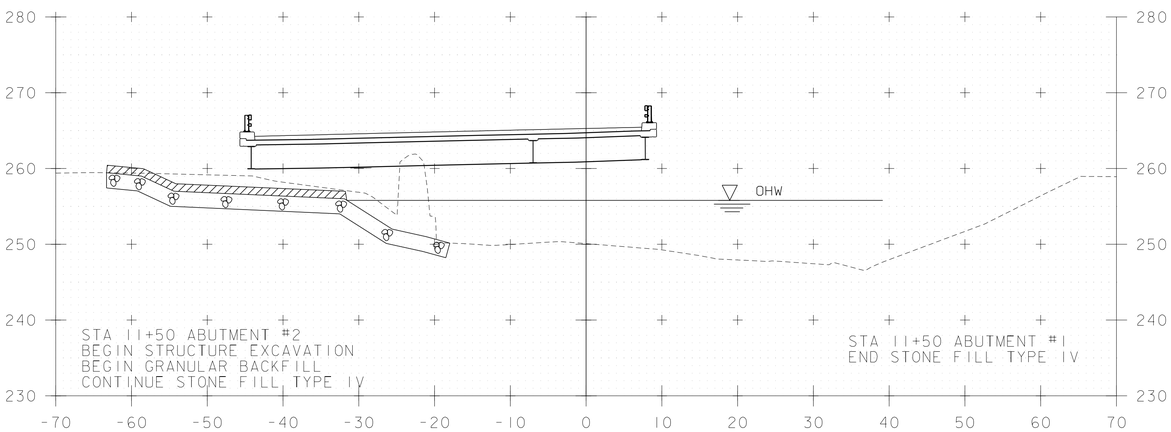

11+50

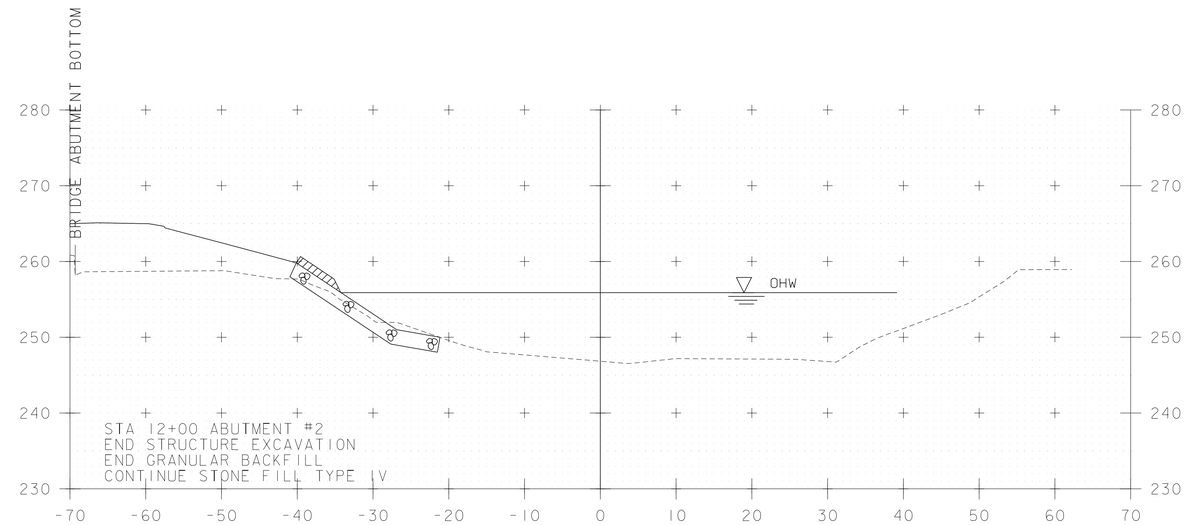

12+00

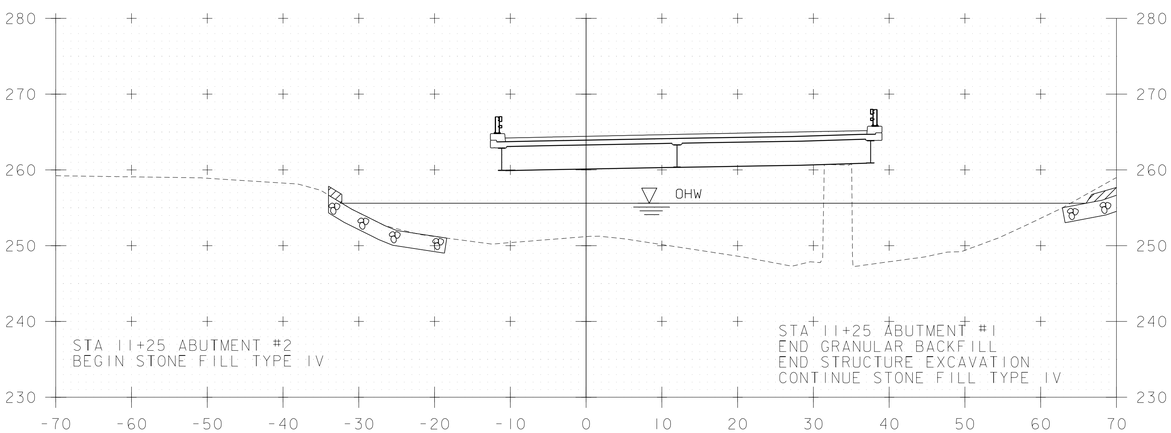

11+25

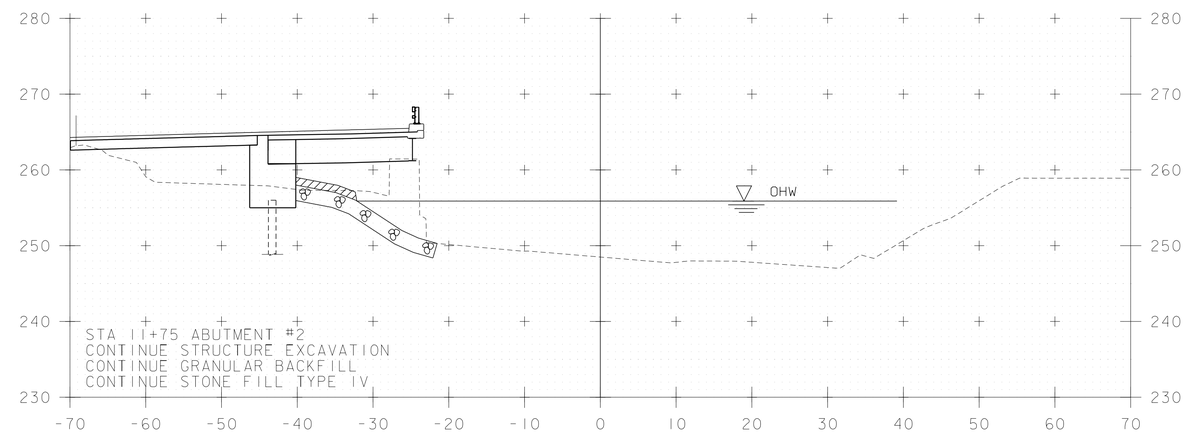

11+75

STA. 11+25 - STA. 12+00

PROJECT NAME: NEW HAVEN	
PROJECT NUMBER: BRF 0183 (1)	
FILE NAME: z10j070xsl.dgn	PLOT DATE: 13-MARCH-2015
PROJECT LEADER: K DONINGTON	DRAWN BY: P ARMANO
DESIGNED BY: P ARMANO	CHECKED BY: R BENJAMIN
CHANNEL CROSS SECTIONS	SHEET 55 OF 66

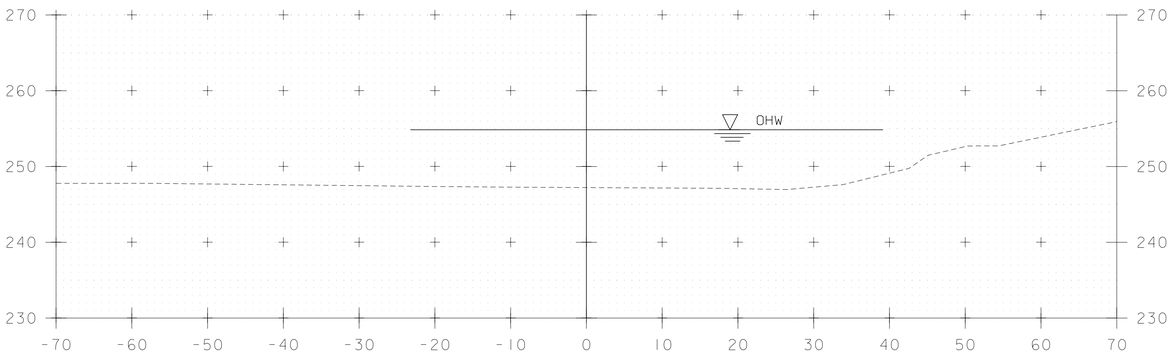

12+75

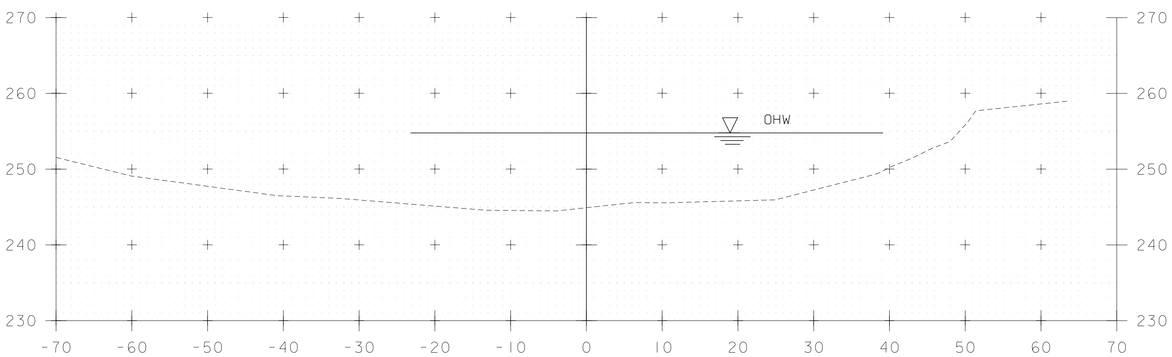

12+50

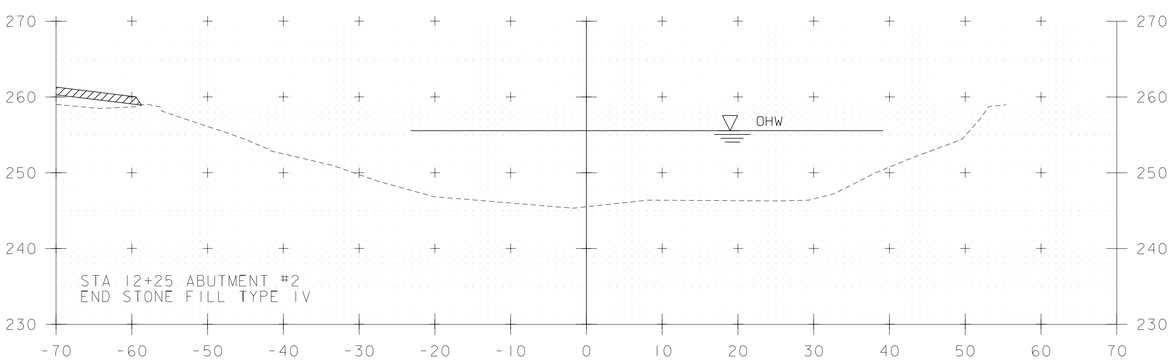

12+25

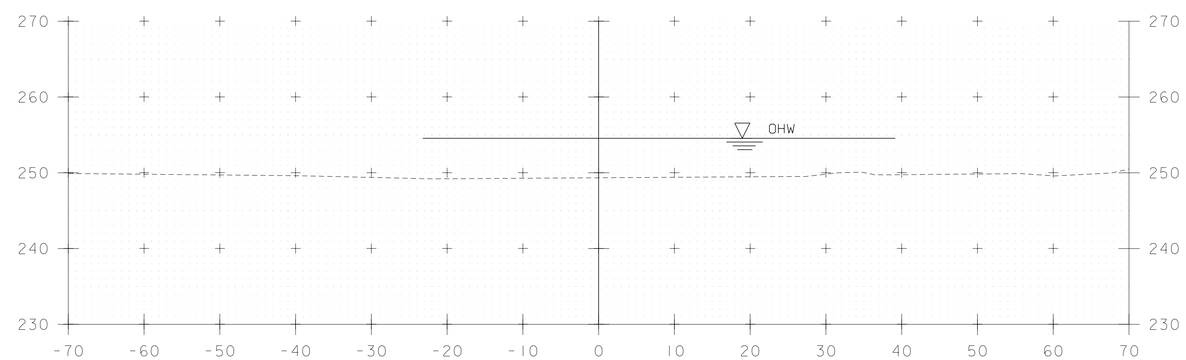

13+00

STA. 12+25 - STA. 13+00

PROJECT NAME: NEW HAVEN	
PROJECT NUMBER: BRF 0183 (1)	
FILE NAME: z10j070xsl.dgn	PLOT DATE: 13-MARCH-2015
PROJECT LEADER: K DONINGTON	DRAWN BY: P ARMANO
DESIGNED BY: P ARMANO	CHECKED BY: R BENJAMIN
CHANNEL CROSS SECTIONS	SHEET 56 OF 66

EPSC PLAN NARRATIVE

1.1 PROJECT DESCRIPTION

THIS PROJECT INVOLVES THE REMOVAL OF A 170' - 3 SPAN BRIDGE. THE BRIDGE WILL BE REPLACED WITH A 164' 2 SPAN CURVED STEEL GIRDER BRIDGE OVER THE NEW HAVEN RIVER, ON NEW INTEGRAL ABUTMENTS ALONG A SIMILAR ALIGNMENT. THE BRIDGE IS LOCATED IN THE TOWN OF NEW HAVEN, ON TH #2.

NOTE: AREA OF DISTURBANCE INCLUDES LIMITS OF EARTH DISTURBANCE WITHIN THE PROJECT AREA, AS WELL AS WASTE, BORROW, AND OTHER EARTH DISTURBING ACTIVITIES WITHIN OR DIRECTLY ADJACENT TO THE PROJECT LIMITS AS SHOWN ON THE ATTACHED EPSC PLAN.

TOTAL AREA OF DISTURBANCE AS SHOWN ON THE ATTACHED EPSC PLAN IS APPROXIMATELY 1.61 ACRES.

IT IS ANTICIPATED THAT THIS PROJECT WILL LAST ONE CONSTRUCTION SEASON.

1.2 SITE INVENTORY

1.2.1 TOPOGRAPHY

THE TOPOGRAPHY OF THE AREA IS MOSTLY WELL ESTABLISHED FOREST WITH OCCASIONAL OPEN AREAS. THERE IS A RESIDENTIAL DWELLING ON THE NORTHWEST PROPERTY OF THE BRIDGE. THIS PROPERTY HAS A LAWN AREA. TOWN HIGHWAY #2, HALPIN ROAD AND 2 GRAVEL DRIVEWAYS ARE WITHIN THE PROJECT SITE.

1.2.2 DRAINAGE, WATERWAYS, BODIES OF WATER, AND PROXIMITY TO NATURAL OR MAN-MADE WATER FEATURES

THE NEW HAVEN RIVER AND MUDDY BROOK ARE THE WATER SOURCES ON THE PROJECT SITE. THE RIVER IS CLASSIFIED AS SEMI-ALLUVIAL, STRAIGHT AND NOT BRAIDED OR UNABRANCHED. THE STREAMBED IS MADE UP PRIMARILY OF COBBLESTONES. THE RIVER HAS A LARGE FLOOD PLAIN AND RELATIVILY SHALLOW BANKS. THERE ARE TWO CROSS PIPES UNDER HALPIN ROAD.

1.2.3 VEGETATION

THE VEGETATION IN THE PROJECT AREA CONSISTS OF HARDWOOD TREES AND UNDERGROWTH. THE IMPACT TO VEGETATION WILL BE LIMITED TO THAT WHICH IS DIRECTLY AFFECTED BY REPLACEMENT OF THE EXISTING BRIDGE. UPON PROJECT COMPLETION, THE CHANNEL WILL BE ARMORED WITH STONE FILL TYPE IV AS SPECIFIED ON THE PLANS. DISTURBED VEGETATION WILL BE REESTABLISHED WITH STANDARD SEED AND MULCH PRACTICES.

1.2.4 SOILS

ALL SOIL DATA CAME FROM THE U.S. DEPARTMENT OF AGRICULTURE SOIL CONSERVATION SERVICE:

Wo - WINOOSKI, VERY FINE SANDY LOAM, SLOPES 0 TO 3%, MODERATELY WELL DRAINED, SLIGHT EROSION POTENTIAL

Hh - HADLEY, VERY FINE SANDY LOAM, FREQUENTLY FLOODED

1.2.5 SENSITIVE RESOURCE AREAS

CRITICAL HABITATS: NO
HISTORICAL OR ARCHEOLOGICAL AREAS: YES, HISTORIC NASH FARM AT NW QUADRANT OF SITE
PRIME AGRICULTURAL LAND: NO
THREATENED AND ENDANGERED SPECIES: NO
WATER RESOURCE: NEW HAVEN RIVER
WETLANDS: NO

1.3 RISK EVALUATION

THIS PROJECT FALLS UNDER THE JURISDICTION OF GENERAL PERMIT 3-9020 FOR STORMWATER RUNOFF FROM CONSTRUCTION SITES FOR LOW RISK PROJECTS. ANY MODIFICATIONS TO THE PROJECT THAT INCREASE THE RISK TO ENVIRONMENTAL RESOURCES SHALL BE EVALUATED IN ACCORDANCE WITH THE PERMIT REQUIREMENTS. THE CONTRACTOR WILL BE RESPONSIBLE FOR ANY ADDITIONAL PERMITTING.

1.4 EROSION PREVENTION AND SEDIMENT CONTROL

THE EROSION CONTROL PLANS ARE MEANT AS A GUIDELINE FOR PREVENTING EROSION AND CONTROLLING SEDIMENT TRANSPORT. THE PRINCIPLES OUTLINED IN THIS NARRATIVE CONSIST OF APPLYING MEASURES THROUGHOUT CONSTRUCTION OF THE PROJECT IN ORDER TO MINIMIZE SEDIMENT TRANSPORT TO THE RECEIVING WATERS. THE MEASURES INCLUDE STABILIZATION AND STRUCTURAL PRACTICES, STORM WATER CONTROLS AND OTHER POLLUTION PREVENTION PRACTICES. THEY HAVE BEEN PROPOSED BY THE DESIGNER AS A BASIS FOR PROTECTING RESOURCES AND WILL NEED TO BE BUILT UPON BASED ON THE SPECIFIC MEANS AND METHODS OF THE CONTRACTOR. REFER TO THE LOW RISK SITE HANDBOOK AND APPROPRIATE DETAIL SHEETS FOR SPECIFIC GUIDANCE AND CONSTRUCTION DETAILING.

ALL MEASURES SHALL BE REGULARLY MAINTAINED AND SHALL BE CHECKED FOR SEDIMENT BUILD-UP. SEDIMENT SHALL BE DISPOSED OF AT AN APPPROVED SITE WHERE IT WILL NOT BE SUBJECT TO EROSION.

1.4.1 MARK SITE BOUNDARIES
SITE BOUNDARIES AND AREAS CONSTRUCTION EQUIPMENT CAN ACCESS SHALL BE DELINEATED.

PROJECT DEMARCATION FENCING (PDF) SHALL BE USED TO PHYSICALLY MARK SITE BOUNDARIES.

1.4.2 LIMIT DISTURBANCE AREA
PREVENTING INITIAL SOIL EROSION BY MINIMIZING THE EXPOSED AREA IS MUCH MORE EFFECTIVE THAN TREATING ERODED SEDIMENT. EARTH DISTURBANCE CAN BE MINIMIZED THROUGH CONSTRUCTION PHASING BY ONLY OPENING UP EARTH AS NECESSARY. THIS CAN LIMIT THE AREA THAT WILL BE DISTURBED AND EXPOSED TO EROSION. EMPLOY TEMPORARY CONSTRUCTION STABILIZATION PRACTICES IN INCREMENTAL STAGES AS PHASES CHANGE. FOR PROJECTS WHICH FALL UNDER THE CONSTRUCTION GENERAL PERMIT, ONLY THE ACREAGE LISTED ON THE PERMIT AUTHORIZATION MAY BE EXPOSED AT ANY GIVEN TIME.

MAINTAINING VEGETATED BUFFERS ALONG STREAM BANKS, WETLANDS OR OTHER SENSITIVE AREAS IS A CRUCIAL EROSION AND SEDIMENT CONTROL MEASURE THAT SHOULD BE ESTABLISHED WHEREVER POSSIBLE.

1.4.3 SITE ENTRANCE/EXIT STABILIZATION
TRACKING OF SEDIMENT ONTO PUBLIC HIGHWAYS SHALL BE MINIMIZED TO REDUCE THE POTENTIAL FOR RUNOFF ENTERING RECEIVING WATERS. INSTALLATION SHALL COINCIDE WITH THE CONTRACTORS PROGRESS SCHEDULE.

STABILIZED CONSTRUCTION ENTRANCES SHALL BE INSTALLED AS PROPOSED ON THE EPSC PLAN AND ANYWHERE EQUIPMENT WILL BE GOING FROM AREAS OF EXPOSED SOILS TO PAVED SURFACES.

1.4.4 INSTALL SEDIMENT BARRIERS
SEDIMENT BARRIERS SHALL BE UTILIZED TO INTERCEPT RUNOFF AND ALLOW SUSPENDED SEDIMENT TO SETTLE OUT. THEY SHALL BE INSTALLED PRIOR TO ANY UP SLOPE WORK.

SILT FENCE, TURBIDITY FILTER CURTAINS, AND PIPE INLET PROTECTION SHALL BE INSTALLED AS PROPOSED ON THE EPSC PLAN.

1.4.5 DIVERT UPLAND RUNOFF
DIVERSIONARY MEASURES SHALL BE USED TO INTERCEPT RUNOFF FROM ABOVE THE CONSTRUCTION AND DIRECT IT AROUND THE DISTURBED AREA SO THAT CLEAN WATER DOES NOT BECOME MUDDIED WHILE TRAVELING OVER EXPOSED SOILS ON THE CONSTRUCTION SITE.

THE PROJECT AREA IS RELATIVELY FLAT. THERFORE IT IS NOT ANTICPIATED THAT DIVERSION MEASURES WILL BE NECESSARY.

1.4.6 CONSTRUCT PERMANENT CONTROLS
PERMANENT STORMWATER TREATMENT DEVICES SHALL BE INSTALLED AS SHOWN ON THE PLANS AND IN ACCORDANCE WITH PERMIT CONDITIONS.

THE USE OF PERMANENT STORMWATER TREATMENT DEVICES IS NOT ANTICIPATED FOR THIS PROJECT.

1.4.7 STABILIZE EXPOSED SOILS DURING CONSTRUCTION
ALL AREAS OF DISTURBANCE MUST HAVE TEMPORARY STABILIZATION IN PLACE WITHIN 48 HOURS OF DISTURBANCE OR IN ACCORDANCE WITH THE CONSTRUCTION GENERAL PERMIT 3-9020 AUTHORIZATION.

SURFACE ROUGHENING OF ALL EXPOSED SLOPES, COMBINED WITH TEMPORARY MULCHING, SHALL BE UTILIZED ON A REGULAR BASIS. BIODEGRADABLE EROSION CONTROL MATTING OR AN EQUIVALENT SHALL BE USED TO STABILIZE ALL SLOPES STEEPER THAN 1:3.

THE FORECAST OF RAINFALL EVENTS SHALL TRIGGER IMMEDIATE PROTECTION OF EXPOSED SOILS.

1.4.8 WINTER STABILIZATION
VARIOUS MEASURES SPECIFIC TO WINTER MAY BE NECESSARY SHOULD THE PROJECT EXTEND INTO WINTER (OCTOBER 15 THROUGH APRIL 15). REFER TO THE LOW RISK SITE HANDBOOK FOR GUIDANCE.

1.4.9 STABILIZE SOIL AT FINAL GRADE
EXPOSED SOIL MUST BE STABILIZED WITHIN 48 HOURS OF REACHING FINAL GRADE.

SEED, MULCH, FERTILIZER AND LIME SHALL BE USED TO ESTABLISH PERMANENT VEGETATION. FOR SLOPES STEEPER THAN 1:3, BIODEGRADABLE EROSION CONTROL MATTING OR AN EQUIVALENT SHALL BE USED INSTEAD OF MULCH.

1.4.10 DE-WATERING ACTIVITIES
DISCHARGE FROM DEWATERING ACTIVITIES THAT FLOWS OFF OF THE CONSTRUCTION SITE MUST NOT CAUSE OR CONTRIBUTE TO A VIOLATION OF THE VERMONT WATER QUALITY STANDARDS.

DEWATERING IS NOT ANTICIPATED FOR THIS PROJECT. IF DEWATERING IS NECESSARY THE SPECIFIC MEANS FOR TREATMENT OF DISCHARGE SHALL BE PROVIDED BY THE CONTRACTOR.

1.4.11 INSPECT YOUR SITE
INSPECT THE PROJECT SITE BASED ON SPECIAL PROVISION REQUIREMENTS OR CONSTRUCTION GENERAL PERMIT AUTHORIZATION STIPULATIONS.

1.5 SEQUENCE AND STAGING

THIS SECTION WILL BE DEVELOPED BY THE CONTRACTOR USING THE GUIDANCE OUTLINED IN THE VTRANS EPSC PLAN CONTRACTOR CHECKLIST.

1.5.1 CONSTRUCTION SEQUENCE

1.5.2 OFF-SITE ACTIVITIES
IN ADDITION TO THE CONTRACTOR CHECKLIST ANY ACTIVITIES OUTSIDE THE CONSTRUCTION LIMITS SHALL FOLLOW SPECIFICATION 105.25 - 105.29 OF THE STANDARD SPECIFICATIONS FOR CONSTRUCTION.

1.5.3 UPDATES

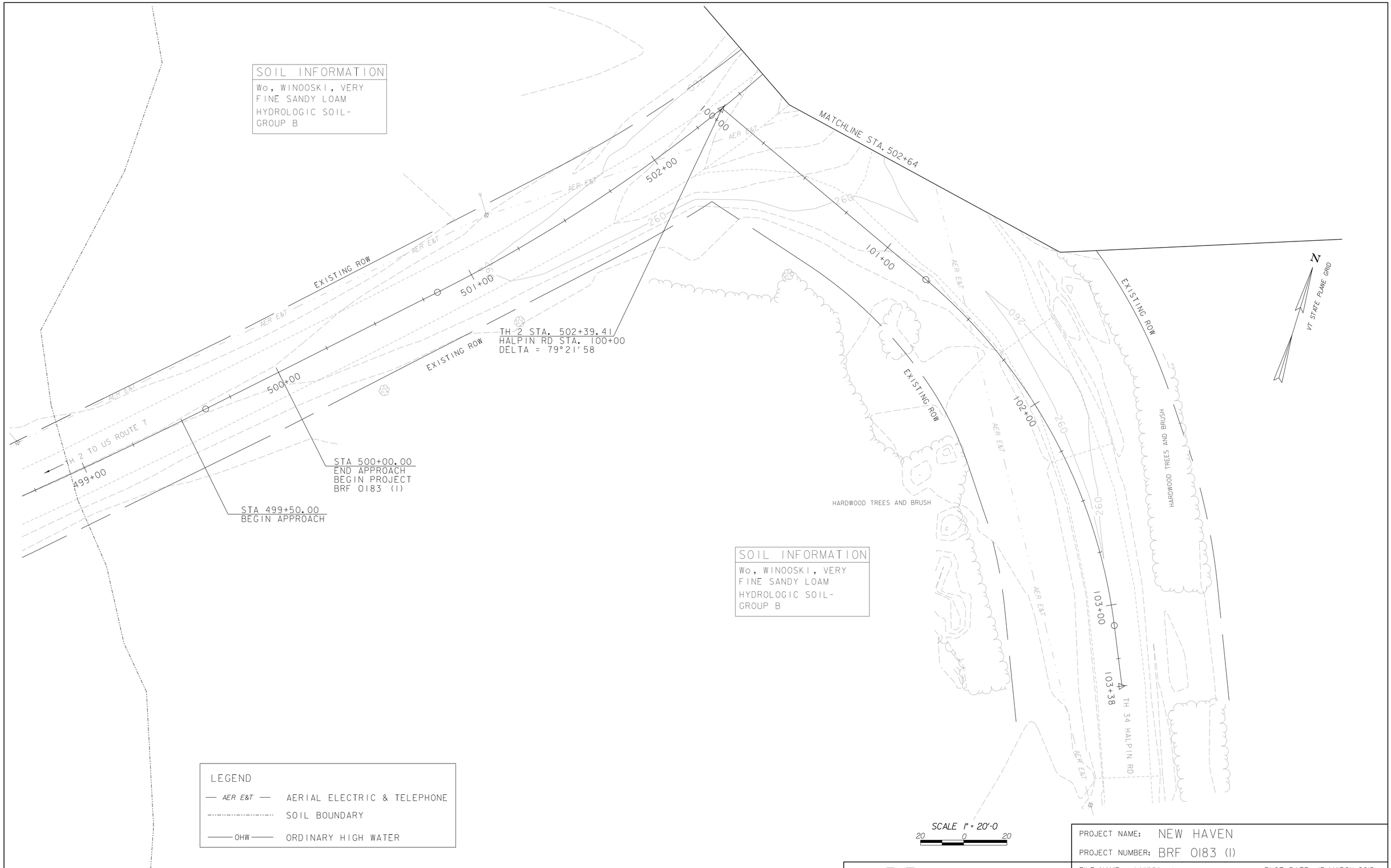

PARSONS BRINCKERHOFF
650 ELM STREET
MANCHESTER, NH 03101

PROJECT NAME: NEW HAVEN
PROJECT NUMBER: BRF 0183 (1)

FILE NAME: z2010706dr1.dgn
PROJECT LEADER: G.K. DONINGTON
DESIGNED BY: P. ARMANO
LAYOUT SHEET (1)

PLOT DATE: 13-MARCH-2015
DRAWN BY: P. ARMANO
CHECKED BY: R. BENJAMIN

EXISTING CONDITIONS SITE PLAN (1)

SHEET 38 OF 66

SOIL INFORMATION
Wo, WINOOSKI, VERY FINE SANDY LOAM
HYDROLOGIC SOIL-GROUP B

SOIL INFORMATION
Hh, HADLEY, VERY FINE SANDY LOAM, FREQUENTLY FLOODED
HYDROLOGIC SOIL-GROUP B

SOIL INFORMATION
Wo, WINOOSKI, VERY FINE SANDY LOAM
HYDROLOGIC SOIL-GROUP B

SOIL INFORMATION
Wo, WINOOSKI, VERY FINE SANDY LOAM
HYDROLOGIC SOIL-GROUP B

BUILDING
BUILDING
EVERGREEN TREES AND LAWN
GRAVEL DRIVE
GRAVEL DRIVE
PAVED DRIVE
EXISTING ROW
EXISTING ROW
NEW HAVEN RIVER
MATCHLINE STA. 502+64
503+00
504+00
505+00
506+00
507+00
508+00
508+59
TH 2 TO BRISTOL
STA 507+80.00
END APPROACH
STA 507+30.00
END PROJECT
BRF 0183 (1)
BEGIN APPROACH
AER E&T
OHW
VT STATE PLANE GRID

LEGEND

— AER E&T —	AERIAL ELECTRIC & TELEPHONE
----------	SOIL BOUNDARY
——OHW——	ORDINARY HIGH WATER

SCALE 1" = 20'-0
20 0 20

PARSONS BRINCKERHOFF
650 ELM STREET
MANCHESTER, NH 03101

PROJECT NAME: NEW HAVEN
PROJECT NUMBER: BRF 0183 (1)

FILE NAME: z10j070exsitebdr.dgn
PROJECT LEADER: G.K. DONINGTON
DESIGNED BY:
EPSC EXISTING CONDITIONS SITE PLAN (2)

PLOT DATE: 13-MARCH-2015
DRAWN BY:
CHECKED BY:
SHEET 59 OF 66

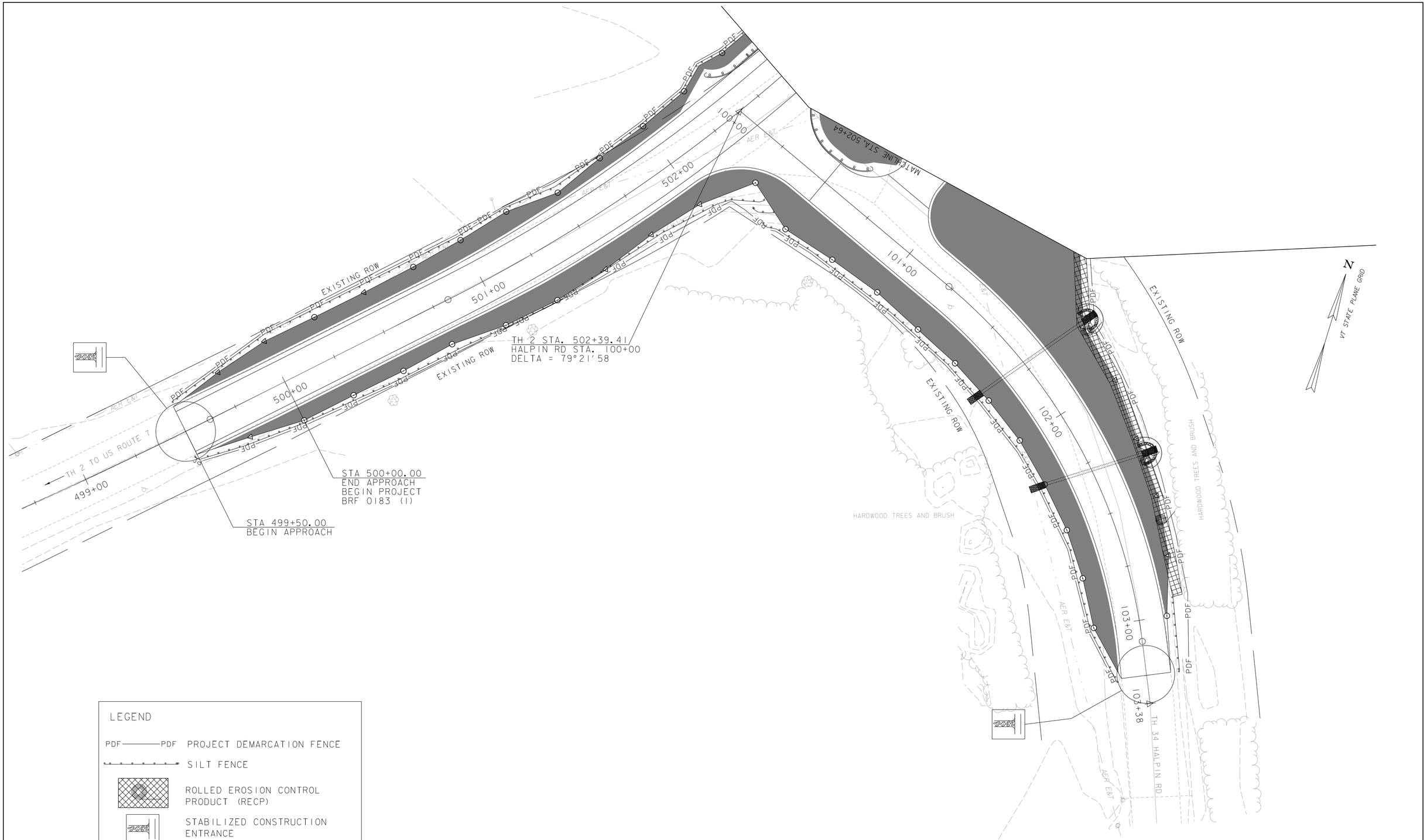

LEGEND

PDF ——— PDF	PROJECT DEMARCATION FENCE
	SILT FENCE
	ROLLED EROSION CONTROL PRODUCT (RECP)
	STABILIZED CONSTRUCTION ENTRANCE
	PIPE INLET PROTECTION

PARSONS BRINCKERHOFF
650 ELM STREET
MANCHESTER, NH 03101

PROJECT NAME: NEW HAVEN
PROJECT NUMBER: BRF 0183 (1)

FILE NAME: z10j070erobdr.dgn
PROJECT LEADER: G.K. DONINGTON
DESIGNED BY:
EPSC CONST. CONDITIONS SITE PLAN (1)

PLOT DATE: 13-MARCH-2015
DRAWN BY:
CHECKED BY:
SHEET 60 OF 66

TEMPORARY CAUSEWAY TO PIER.
THE CORPS OF ENGINEERS SHALL BE NOTIFIED OF ANY PROPOSED CHANGES TO THE CONFIGURATION AND/OR LOCATION OF THE CAUSEWAY PRIOR TO BEGINNING WORK.

STA. 502+94.80
END ROADWAY
BEGIN BRIDGE

IMPACT AREA
885 SF

IMPACT AREA
816 SF
TEMPORARY
IMPACT AREA
3169 SF

TEMPORARY
CONSTRUCTION
LIMITS

STA. 504+61.82
END BRIDGE
RESUME ROADWAY

MATCHLINE STA. 502+64

VT STATE PLANE GRID

BUILDING

EVERGREEN TREES AND LAWN

GRAVEL DRIVE

PAVED DRIVE

EXISTING ROW

TH 2 TO
BRISTOL

NEW HAVEN RIVER

STA 507+80.00
END APPROACH

STA 507+30.00
END PROJECT
BRF 0183 (1)
BEGIN APPROACH

503+00 504+00 505+00 506+00 507+00 508+00 508+59

LEGEND

PDF———PDF	PROJECT DEMARCATION FENCE
	SILT FENCE
	ROLLED EROSION CONTROL PRODUCT (RECP)
	STABILIZED CONSTRUCTION ENTRANCE

SCALE 1" = 20'-0
20 0 20

PARSONS BRINCKERHOFF
650 ELM STREET
MANCHESTER, NH 03101

PROJECT NAME: NEW HAVEN
PROJECT NUMBER: BRF 0183 (1)

FILE NAME: z10j070erobdr.dgn
PROJECT LEADER: G.K. DONINGTON
DESIGNED BY:
EPSC CONST. CONDITIONS SITE PLAN (2)

PLOT DATE: 13-MARCH-2015
DRAWN BY:
CHECKED BY:
SHEET 61 OF 66

CONSTRUCTION LIMITS (TYP.)

EXISTING ROW

AER E&T

501+00

502+00

100+00

MATCHLINE STA. 502+64

TH 2 STA. 502+39.41
HALPIN RD STA. 100+00
DELTA = 79°21'58

EXISTING ROW

CONSTRUCTION LIMITS (TYP.)

500+00

TH 2 TO US ROUTE 7

499+00

STA 500+00.00
END APPROACH
BEGIN PROJECT
BRF 0183 (1)

STA 499+50.00
BEGIN APPROACH

101+00

102+00

103+00

103+38

HALPIN ROAD

TH 34 HALPIN RD

EXISTING ROW

HARDWOOD TREES AND BRUSH

HARDWOOD TREES AND BRUSH

N

VT STATE PLANE GRID

LEGEND

DISTURBED AREAS REQUIRING RE-VEGETATION

CUT/FILL LIMITS

SCALE 1" = 20'-0

20 0 20

PARSONS BRINCKERHOFF
650 ELM STREET
MANCHESTER, NH 03101

PROJECT NAME: NEW HAVEN

PROJECT NUMBER: BRF 0183 (1)

FILE NAME: z10070sitebdr.dgn
PROJECT LEADER: G.K. DONINGTON
DESIGNED BY: P. ARMANO
EPSC FINAL CONDITIONS SITE PLAN (1)

PLOT DATE: 13-MARCH-2015
DRAWN BY: P. ARMANO
CHECKED BY: R. BENJAMIN
SHEET 62 OF 66

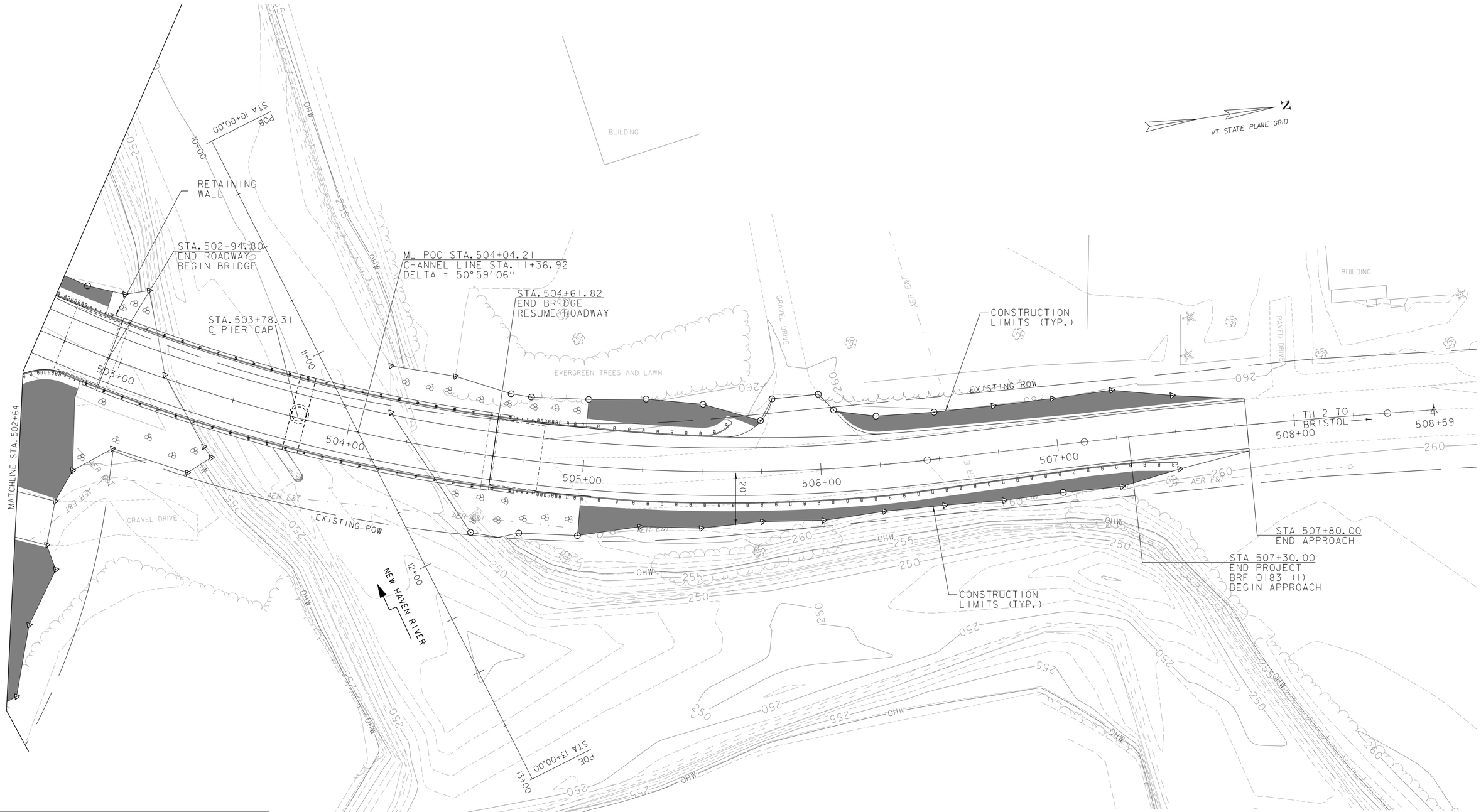

LEGEND

DISTURBED AREAS REQUIRING RE-VEGETATION

CUT/FILL LIMITS

SCALE 1" = 20'-0

20 0 20

PARSONS BRINCKERHOFF
650 ELM STREET
MANCHESTER, NH 03101

PROJECT NAME: NEW HAVEN

PROJECT NUMBER: BRF 0183 (1)

FILE NAME: z10j070sitebdr.dgn
PROJECT LEADER: G.K. DONINGTON
DESIGNED BY: P. ARMANO
EPSC FINAL CONDITIONS SITE PLAN (2)

PLOT DATE: 13-MARCH-2015
DRAWN BY: P. ARMANO
CHECKED BY: R. BENJAMIN
SHEET 63 OF 66

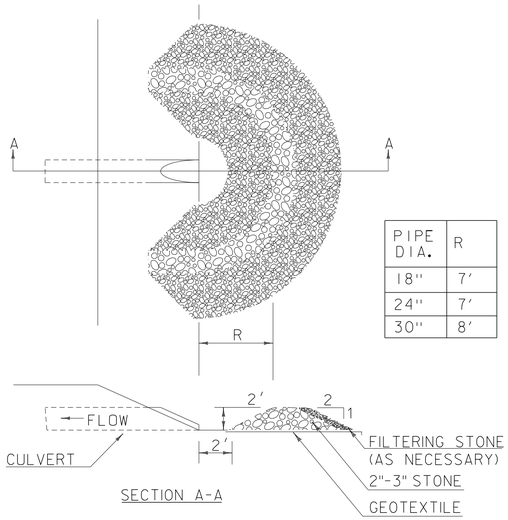

PIPE DIA.	R
18"	7'
24"	7'
30"	8'

SYMBOL

NOT TO SCALE

CONSTRUCTION SPECIFICATIONS

1. USE 2" TO 3" STONE. FILTERING STONE SHALL BE 3/4".
2. PLACE STONE OVER GEOTEXTILE.
3. ONCE THE AREAS UPSTREAM FROM THE CHECK DAM ARE STABILIZED WITH VEGETATION, THE SEDIMENT TRAPPED BEHIND THE DAM SHALL BE DISPOSED OF IN AN APPROVED WASTE AREA.
4. THE CHECK DAM(S) SHALL BE FLATTENED AND GRADED IN A MANNER WHICH PROTECTS THE AREA FROM EROSION AND CHANNEL BLOCKAGE . (GEOTEXTILE MUST BE REMOVED).
5. THE GEOTEXTILE MUST BE DISPOSED OF APPROPRIATELY.
6. THE AREA CONTRIBUTING TO THE CHECK DAM SHALL NOT EXCEED 4 ACRES.

ADAPTED FROM DETAILS PROVIDED BY: ILLINOIS USDA-NRCS
ORIGINALLY DEVELOPED BY USDA-NRCS

PIPE INLET PROTECTION

THIS WORK SHALL BE PERFORMED IN ACCORDANCE WITH SECTION 653 FOR INLET PROTECTION DEVICE, TYPE I (PAY ITEM 653.40).

REVISIONS	
MARCH 6, 2008	WHF
JANUARY 13, 2009	WHF

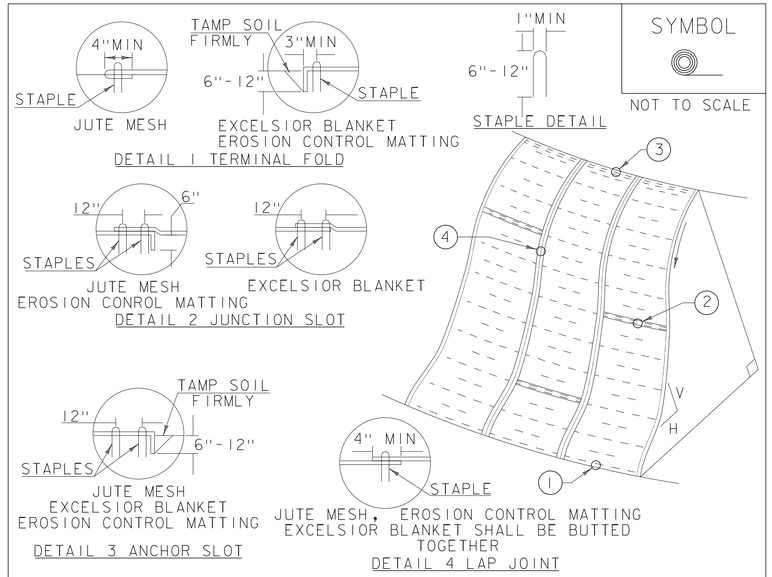

SYMBOL

NOT TO SCALE

CONSTRUCTION SPECIFICATIONS

1. APPLY TO SLOPES GREATER THAN 3H:1V OR WHERE NECESSARY TO AID IN ESTABLISHING VEGETATION.
2. APPLY FERTILIZER, LIME SEED PRIOR TO PLACING MATTING.
3. STAPLES ARE TO BE PLACED ALTERNATELY, IN COLUMNS APPROXIMATELY 2' APART AND IN ROWS APPROXIMATELY 3' APART. APPROXIMATELY 175 STAPLES ARE REQUIRED PER 4'X225' ROLL OF MATERIAL AND 125 STAPLES ARE REQUIRED PER 4'X150' ROLL OF MATERIAL.
4. DISTURBED AREAS SHALL BE SMOOTHLY GRADED. EROSION CONTROL MATERIAL SHALL BE PLACED LOOSELY OVER GROUND SURFACE. DO NOT STRETCH.
5. ALL TERMINAL ENDS AND TRANSVERSE LAPS SHALL BE STAPLED AT APPROXIMATELY 12" INTERVALS.

ADAPTED FROM DETAILS PROVIDED BY: NEW YORK STATE DEC
ORIGINALLY DEVELOPED BY USDA-NRCS
VERMONT DEPARTMENT OF ENVIRONMENTAL CONSERVATION

ROLLED EROSION CONTROL PRODUCT (RECP) SIDE SLOPE

NOTES:
REFER TO "THE VERMONT STANDARDS & SPECIFICATIONS FOR EROSION PREVENTION & SEDIMENT CONTROL -2006- "FROM THE VT AGENCY OF NATURAL RESOURCES FOR ADDITIONAL GUIDANCE.
THIS WORK SHALL BE PERFORMED IN ACCORDANCE WITH SECTION 653 AND AS SHOWN IN THE PLANS FOR TEMPORARY EROSION MATTING (PAY ITEM 653.20) OR PERMANENT EROSION MATTING (PAY ITEM 653.21).

REVISIONS	
APRIL 16, 2007	JMF
JANUARY 13, 2009	WHF

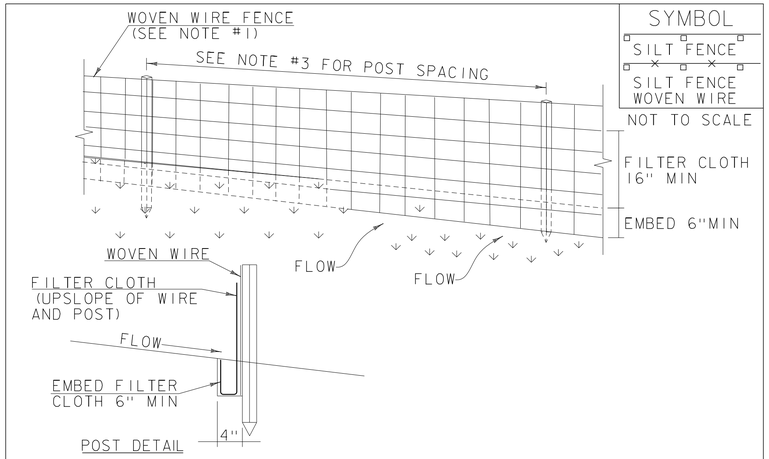

SYMBOL

SILT FENCE

SILT FENCE WOVEN WIRE

NOT TO SCALE

CONSTRUCTION SPECIFICATIONS

1. WOVEN WIRE REINFORCED FENCE IS REQUIRED WITHIN 100' UPSLOPE OF RECEIVING WATERS WHEN THE PROJECT FALLS UNDER A CONSTRUCTION STORMWATER PERMIT. WOVEN WIRE SHALL BE A MIN. 14 GAUGE WITH A 6" MAX. MESH OPENING.
2. FILTER CLOTH SHALL BE EITHER FILTER X, MIRAFI 100X, STABILINKA T140N OR APPROVED EQUIVALENT.
3. POST SPACING FOR WIRE-BACKED FENCE SHALL BE 10' MAXIMUM. FOR FILTER-CLOTH FENCE, WHEN ELONGATION IS >50%, POST SPACING SHALL NOT EXCEED 4' AND WHEN ELONGATION IS <50%, POST SPACING SHALL NOT EXCEED 6'.
4. WOVEN WIRE FENCE IS TO BE FASTENED SECURELY TO FENCE POSTS WITH WIRE TIES. FILTER CLOTH IS TO BE FASTENED SECURELY TO WOVEN WIRE FENCE WITH TIES SPACED EVERY 24" AT TOP AND MID SECTION.
5. WHEN TWO SECTIONS OF FILTER CLOTH ADJOIN EACH OTHER THEY SHALL BE OVER-LAPPED BY 6" AND FOLDED.
6. MAINTENANCE SHALL BE PERFORMED AS NEEDED AND MATERIAL REMOVED WHEN SEDIMENT REACHES HALF OF FABRIC HEIGHT.

ADAPTED FROM DETAILS PROVIDED BY: NEW YORK STATE DEC
ORIGINALLY DEVELOPED BY USDA-NRCS
VERMONT DEPARTMENT OF ENVIRONMENTAL CONSERVATION

SILT FENCE

NOTES:
REFER TO "THE VERMONT STANDARDS & SPECIFICATIONS FOR EROSION PREVENTION & SEDIMENT CONTROL -2006- "FROM THE VT AGENCY OF NATURAL RESOURCES FOR ADDITIONAL GUIDANCE.

THIS WORK SHALL BE PERFORMED IN ACCORDANCE WITH SECTION 649 AND AS SHOWN IN THE PLANS FOR GEOTEXTILE FOR SILT FENCE (PAY ITEM 649.51) OR GEOTEXTILE FOR SILT FENCE, WOVEN WIRE REINFORCED (PAY ITEM 649.515).

REVISIONS	
MARCH 21, 2008	WHF
DECEMBER 11, 2008	WHF
JANUARY 13, 2009	WHF

PROJECT NAME: NEW HAVEN
PROJECT NUMBER: BRF 0183 (1)

PARSONS BRINCKERHOFF
650 ELM STREET
MANCHESTER, NH 03101

FILE NAME: z10j070epscdet.dgn
PROJECT LEADER: K. DONINGTON
DESIGNED BY: P. ARMANO
EPSC DETAILS (1)

PLOT DATE: 13-MARCH-2015
DRAWN BY: P. ARMANO
CHECKED BY: R. BENJAMIN
SHEET 64 OF 66

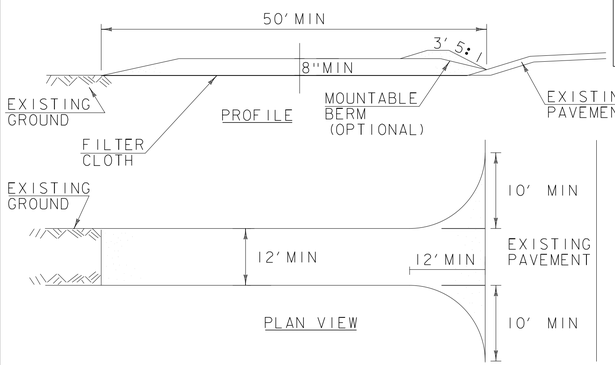

SYMBOL

NOT TO SCALE

CONSTRUCTION SPECIFICATIONS

1. STONE SIZE- USE 1-4" STONE, RECLAIMED OR RECYCLED CONCRETE EQUIVALENT.
2. LENGTH- NOT LESS THAN 50' (EXCEPT ON A SINGLE RESIDENCE LOT WHERE A 30' MINIMUM LENGTH APPLIES).
3. THICKNESS- NOT LESS THAN 8".
4. WIDTH- 12' MINIMUM, BUT NOT LESS THAN THE FULL WIDTH AT POINTS WHERE INGRESS OR EGRESS OCCURS. 24' IF SINGLE ENTRANCE TO SITE.
5. GEOTEXTILE MUST BE PLACED OVER THE ENTIRE AREA PRIOR TO PLACING STONE.
6. SURFACE WATER- ALL SURFACE WATER FLOWING OR DIVERTED TOWARD CONSTRUCTION ENTRANCES SHALL BE PIPED BENEATH THE ENTRANCE. IF PIPING IS IMPRACTICAL, A MOUNTABLE BERM WITH 5:1 SLOPES WILL BE PERMITTED.
7. MAINTENANCE- THE ENTRANCE SHALL BE MAINTAINED IN A CONDITION WHICH WILL PREVENT TRACKING OR FLOWING OF SEDIMENT ONTO PUBLIC RIGHTS-OF-WAY, ALL SEDIMENT SPILLED, DROPPED, WASHED OR TRACKED ONTO PUBLIC RIGHTS-OF-WAY MUST BE REMOVED IMMEDIATELY.
8. WHEN WASHING IS REQUIRED, IT SHALL BE DONE ON AN AREA STABILIZED WITH STONE AND WHICH DRAINS INTO AN APPROVED SEDIMENT TRAPPING DEVICE.
9. PERIODIC INSPECTION AND NEEDED MAINTENANCE SHALL BE PROVIDED ACCORDING TO PERMIT REQUIREMENTS.

ADAPTED FROM DETAILS PROVIDED BY: NEW YORK STATE DEC
ORIGINALLY DEVELOPED BY USDA-NRCS
VERMONT DEPARTMENT OF ENVIRONMENTAL CONSERVATION

STABILIZED CONSTRUCTION ENTRANCE

NOTES:
REFER TO "THE VERMONT STANDARDS & SPECIFICATIONS FOR EROSION PREVENTION & SEDIMENT CONTROL -2006- "FROM THE VT AGENCY OF NATURAL RESOURCES FOR ADDITIONAL GUIDANCE.

THIS WORK SHALL BE PERFORMED IN ACCORDANCE WITH SECTION 653 FOR VEHICLE TRACKING PAD (PAY ITEM 653.35) OR AS SPECIFIED IN THE CONTRACT.

REVISIONS	
MARCH 24, 2008	WHF
JANUARY 13, 2009	WHF

VAOT LOW GROW/FINE FESCUE MIX						
	LBS/AC					
WEIGHT	BROADCAST	HYDROSEED	NAME	LATIN NAME	GERM	PURITY
38%	57	95	CREEPING RED FESCUE	FESTUCA RUBRA VAR. RUBRA	90%	98%
29%	43.5	72.5	HARD FESCUE	FESTUCA LONGIFOLIA	85%	95%
15%	22.5	37.5	CHEWINGS FESCUE	FESTUCA RUBRA VAR. COMMUTATA	87%	95%
15%	22.5	37.5	ANNUAL RYEGRASS	LOLIUM MULTIFLORUM	90%	95%
3%	4.5	7.5	INERTS			
100%	150	250				

VAOT RURAL AREA MIX						
	LBS/AC					
WEIGHT	BROADCAST	HYDROSEED	NAME	LATIN NAME	GERM	PURITY
37.5%	22.5	45	CREEPING RED FESCUE	FESTUCA RUBRA VAR. RUBRA	85%	98%
37.5%	22.5	45	TALL FESCUE	FESTUCA ARUNDINACEA	90%	95%
5.0%	3	6	RED TOP	AGROSTIS GIGANTEA	90%	95%
15.0%	9	18	WHITE FIELD CLOVER	TRIFOLIUM REPENS	85%	98%
5.0%	3	6	ANNUAL RYE GRASS	LOLIUM MULTIFLORUM	85%	95%
100%	60	120				

GENERAL AMENDMENT GUIDANCE		
FERTILIZER	LIME	
10/20/10	AG LIME	PELLITIZED
500 LBS/AC	2 TONS/AC	1 TONS/AC

CONSTRUCTION GUIDANCE

1. SEED MIX: THE CONTRACTOR SHALL COORDINATE WITH THE RESIDENT ENGINEER ON WHICH SEED MIX TO USE.
2. SEED MIX: USE AS INDICATED IN THE PLANS AND/OR FOR ALL ESTABLISHED UPLAND (NON WETLAND) AREAS DISTURBED BY THE CONTRACTOR.
3. ALL SEED MIXTURES: SHALL NOT HAVE A WEED CONTENT EXCEEDING 0.40% BY WEIGHT AND SHALL BE FREE OF ALL NOXIOUS SEED.
4. FERTILIZER AND LIMESTONE: SHALL FOLLOW RATES SHOWN ON PLAN OR AS DIRECTED BY THE ENGINEER.
5. HAY MULCH: TO BE PLACED ON EARTH SLOPES AT THE RATE OF 2 TONS/ACRE, ACHIEVE 90% GROUND COVER OR AS DIRECTED BY THE ENGINEER.
6. HYDROSEEDING: ALTHOUGH GUIDANCE IS GIVEN ABOVE THE SITE CONDITIONS AND THE TYPE OF HYDROSEED PROPOSED FOR USE WILL ULTIMATELY DICTATE THE AMOUNTS AND TYPES OF SOIL AMENDMENTS TO BE APPLIED.
7. TURF ESTABLISHMENT: PLACING SEED, FERTILIZER, LIME AND MULCH PRIOR TO SEPTEMBER 15 AND AFTER APRIL 15 CAN BETTER ENSURE A VIGOROUS GROWTH OF GRASS.

ADAPTED FROM VTRANS TECHNICAL LANDSCAPE MANUAL FOR ROADWAYS AND TRANSPORTATION FACILITIES

TURF ESTABLISHMENT

THIS WORK SHALL BE PERFORMED IN ACCORDANCE WITH SECTION 651 FOR SEED (PAY ITEM 651.15)

REVISIONS	
JANUARY 12, 2015	WHF

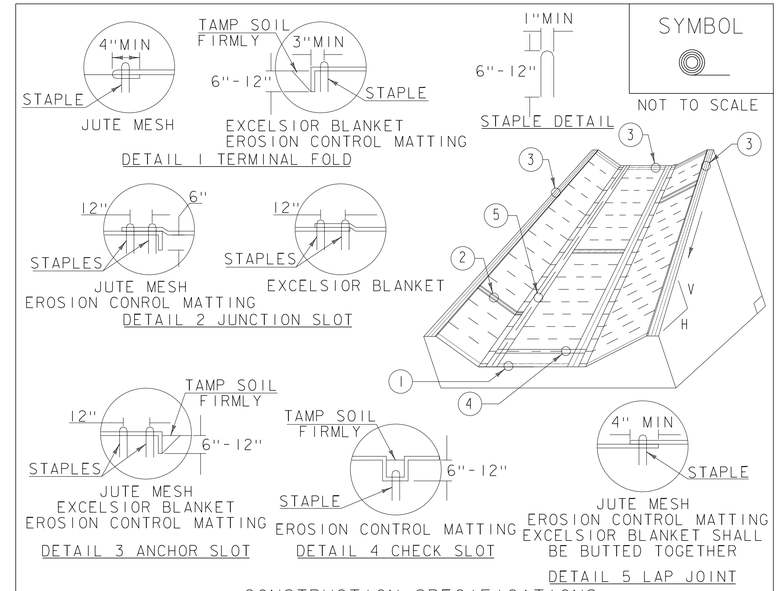

SYMBOL

NOT TO SCALE

CONSTRUCTION SPECIFICATIONS

1. EROSION MATTING, CHECK SLOTS, SHALL BE SPACED IN DITCH CHANNEL SO THAT ONE OCCURS WITHIN EACH 50' ON SLOPES OF MORE THAN 4% AND LESS THAN 6%. ON SLOPES OF 6% OR MORE, THEY SHALL BE SPACED SO THAT ONE OCCURS WITHIN EACH 25'.
2. APPLY FERTILIZER, LIME SEED PRIOR TO PLACING MATTING.
3. STAPLES ARE TO BE PLACED ALTERNATELY, IN COLUMNS APPROXIMATELY 2' APART AND IN ROWS APPROXIMATELY 3' APART. APPROXIMATELY 175 STAPLES ARE REQUIRED PER 4'X225' ROLL OF MATERIAL AND 125 STAPLES ARE REQUIRED PER 4'X150' ROLL OF MATERIAL.
4. DISTURBED AREAS SHALL BE SMOOTHLY GRADED. EROSION CONTROL MATERIAL SHALL BE PLACED LOOSELY OVER GROUND SURFACE. DO NOT STRETCH.
5. ALL TERMINAL ENDS AND TRANSVERSE LAPS SHALL BE STAPLED AT APPROXIMATELY 12" INTERVALS.

ADAPTED FROM DETAILS PROVIDED BY: NEW YORK STATE DEC
ORIGINALLY DEVELOPED BY USDA-NRCS
VERMONT DEPARTMENT OF ENVIRONMENTAL CONSERVATION

ROLLED EROSION CONTROL PRODUCT (RECP) DITCH

NOTES:
REFER TO "THE VERMONT STANDARDS & SPECIFICATIONS FOR EROSION PREVENTION & SEDIMENT CONTROL -2006- "FROM THE VT AGENCY OF NATURAL RESOURCES FOR ADDITIONAL GUIDANCE.
THIS WORK SHALL BE PERFORMED IN ACCORDANCE WITH SECTION 653 AND AS SHOWN IN THE PLANS FOR TEMPORARY EROSION MATTING (PAY ITEM 653.20) OR PERMANENT EROSION MATTING (PAY ITEM 653.21).

REVISIONS	
MARCH 8, 2007	JMF
APRIL 16, 2007	WHF
JANUARY 13, 2009	WHF

PROJECT NAME: NEW HAVEN
PROJECT NUMBER: BRF 0183 (1)

PARSONS BRINCKERHOFF
650 ELM STREET
MANCHESTER, NH 03101

FILE NAME: z10j070epscdet.dgn
PROJECT LEADER: K. DONINGTON
DESIGNED BY: P. ARMANO
EPSC DETAILS (2)

PLOT DATE: 13-MARCH-2015
DRAWN BY: P. ARMANO
CHECKED BY: R. BENJAMIN
SHEET 65 OF 66

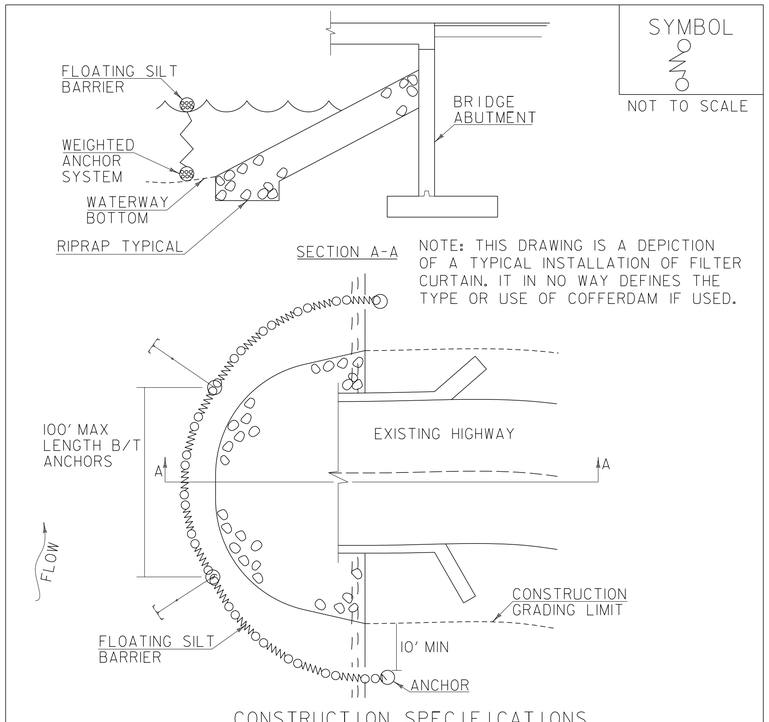

CONSTRUCTION SPECIFICATIONS

1. FILTER CURTAIN SHALL NOT BE PLACED ACROSS A FLOWING WATERWAY, OR IN A WATERWAY WITH STREAM VELOCITIES GREATER THAN 1.5 FEET/SECOND.
2. MAXIMUM 100' LENGTH BETWEEN ANCHORS.
3. LAST SECTION SHALL TERMINATE A MINIMUM OF 10' BEYOND LIMIT OF DISTURBANCE.
4. THE WEIGHTED ANCHOR SYSTEM SHALL BE A TYPE WHICH ALLOWS THE CURTAIN TO CONFORM TO THE BOTTOM OF THE WATERWAY.
5. THE CURTAIN SHALL BE REMOVED BY SLOWLY PULLING TOWARD THE SHORE MINIMIZING THE ESCAPE OF SEDIMENTS INTO WATERWAY.

FILTER CURTAIN

THIS WORK SHALL BE PERFORMED IN ACCORDANCE WITH SECTION 649 FOR GEOTEXTILE FOR FILTER CURTAIN (PAY ITEM 649.61).

REVISIONS	
APRIL 1, 2008	WHF
JANUARY 13, 2009	WHF
SEPTEMBER 4, 2009	WHF

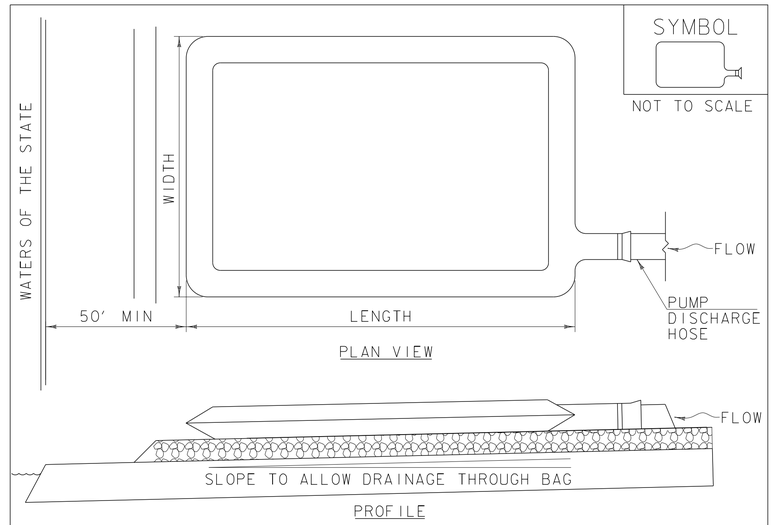

CONSTRUCTION SPECIFICATIONS

1. THE PRIMARY PURPOSE OF FILTER BAG IS TO RETAIN SILT, SAND, AND FINES DURING DEWATERING OPERATIONS.
2. FILTER BAGS SHALL BE INSTALLED ON A VEGETATED SLOPE GRADED TO ALLOW INCOMING WATER TO FLOW THROUGH THE BAG.
3. FILTER BAGS MAY ALSO BE PLACED ON COARSE AGGREGATE, STONE, OR HAYBALES TO INCREASE FILTRATION EFFICIENCY.
4. FILTER BAGS SHALL BE LOCATED A MINIMUM OF 50' FROM WATERS OF THE STATE UNLESS OTHERWISE APPROVED BY THE ENGINEER.
5. THE NECK OF THE FILTER BAG SHALL BE STRAPPED TIGHTLY TO THE DISCHARGE HOSE.
6. A FILTER BAG IS FULL WHEN IT NO LONGER CAN EFFICIENTLY FILTER SEDIMENT OR ALLOW WATER TO PASS AT A REASONABLE RATE.
7. FILTER BAG SHALL BE DISPOSED OF AS APPROVED IN THE EPSC PLAN OR AS DIRECTED BY THE ENGINEER.

FILTER BAG

NOTES:
REFER TO "THE VERMONT STANDARDS & SPECIFICATIONS FOR EROSION PREVENTION & SEDIMENT CONTROL -2006- "FROM THE VT AGENCY OF NATURAL RESOURCES FOR ADDITIONAL GUIDANCE.

THIS WORK SHALL BE PERFORMED IN ACCORDANCE WITH SECTION 653 FOR FILTER BAG (PAY ITEM 653.45) AND AS SPECIFIED IN THE CONTRACT.

REVISIONS	
MARCH 24, 2008	WHF
JANUARY 13, 2009	WHF

PROJECT NAME: NEW HAVEN
PROJECT NUMBER: BRF 0183 (1)

PARSONS BRINCKERHOFF
650 ELM STREET
MANCHESTER, NH 03101

FILE NAME: z10j070epscdet.dgn
PROJECT LEADER: K. DONINGTON
DESIGNED BY: P. ARMANO
EPSC DETAILS (3)

PLOT DATE: 13-MARCH-2015
DRAWN BY: P. ARMANO
CHECKED BY: R. BENJAMIN
SHEET 66 OF 66

CONCRETE GENERAL NOTES

1. ALL EXPOSED EDGES OF CONCRETE SHALL BE CHAMFERED 1" x 1"
2. REINFORCING STEEL SIZE AND SPACING SHOWN IN THE PLANS IS BASED ON 60 KSI STEEL, UNLESS NOTED OTHERWISE. WITH THE ENGINEER'S PERMISSION, BAR SIZE AND SPACING MAY BE MODIFIED ACCORDING TO THE LATEST AASHTO LRFD BRIDGE DESIGN SPECIFICATION AND STRUCTURES DESIGN MANUAL WHEN USING HIGHER STRENGTH STEEL.

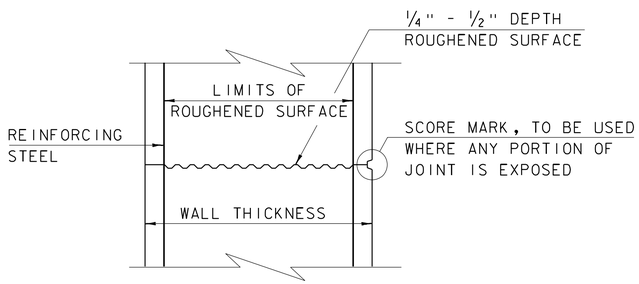

TYPICAL HORIZONTAL CONSTRUCTION JOINT

(NOT TO SCALE)

1. THE SURFACE OF THE CONCRETE CONSTRUCTION JOINTS SHALL BE CLEANED AND FREE OF LAITANCE.
2. IMMEDIATELY BEFORE NEW CONCRETE IS PLACED, ALL CONSTRUCTION JOINTS SHALL BE WETTED AND STANDING WATER REMOVED.

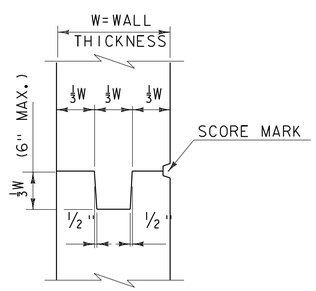

TYPICAL CONCRETE CONSTRUCTION JOINT

(NOT TO SCALE)

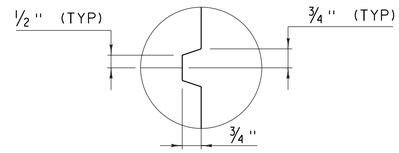

SCORE MARK DETAIL

(NOT TO SCALE)

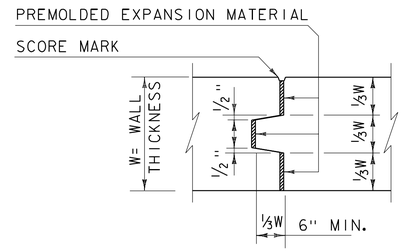

TYPICAL CONCRETE EXPANSION JOINT

(NOT TO SCALE)

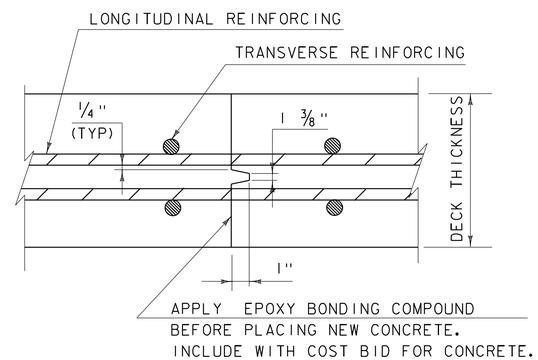

TRANSVERSE BRIDGE SLAB CONSTRUCTION JOINT DETAILS

(NOT TO SCALE)

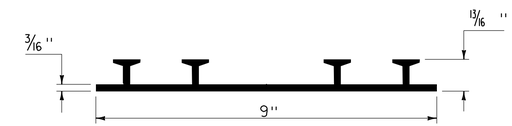

P.V.C. WATERSTOP FOR CONSTRUCTION JOINTS

(NOT TO SCALE)

PAYMENT FOR THE P.V.C. WATERSTOP SHALL BE INCIDENTAL TO THE UNIT BID PRICE FOR THE ADJACENT CONCRETE.

OTHER CONFIGURATIONS OF WATERSTOP MAY BE USED UPON APPROVAL OF THE ENGINEER.

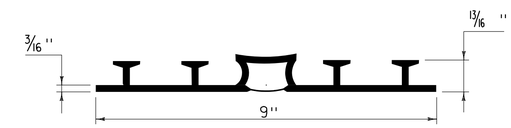

P.V.C. WATERSTOP FOR EXPANSION JOINTS

(NOT TO SCALE)

PAYMENT FOR THE P.V.C. WATERSTOP SHALL BE INCIDENTAL TO THE UNIT BID PRICE FOR THE ADJACENT CONCRETE.

OTHER CONFIGURATIONS OF WATERSTOP MAY BE USED UPON APPROVAL OF THE ENGINEER.

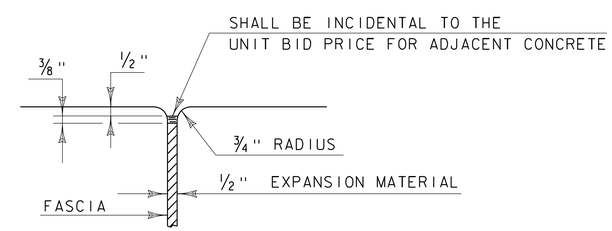

JOINT BETWEEN FASCIA AND WINGWALL

(NOT TO SCALE)

REVISIONS	
MAY 7, 2010	APPROVED FOR USE BY VAOT STRUCTURES SECTION
FEBRUARY 9, 2012	REBAR SUBSTITUTION ALLOWANCE ADDED TO CONCRETE GENERAL NOTES.

CONCRETE DETAILS AND NOTES

VERMONT AGENCY OF TRANSPORTATION
STRUCTURES - SECTION

STRUCTURES DETAIL

SD-501.00

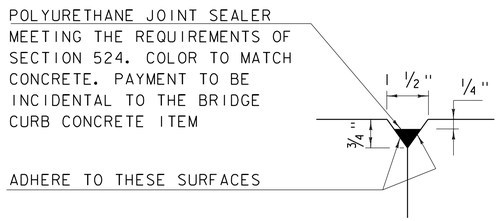

DETAIL "B"
(NOT TO SCALE)

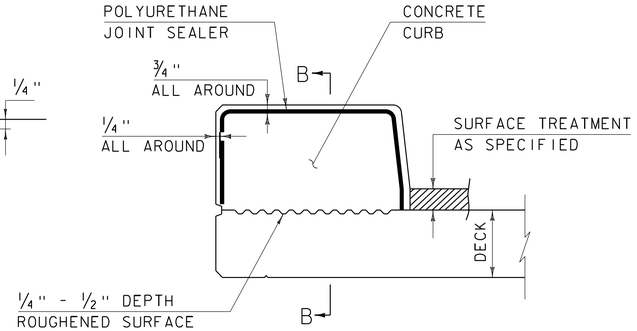

CONCRETE CURB JOINT SECTION
(NOT TO SCALE)

1. SEE TYPICAL HORIZONTAL CONSTRUCTION JOINT DETAIL FOR ADDITIONAL INFORMATION

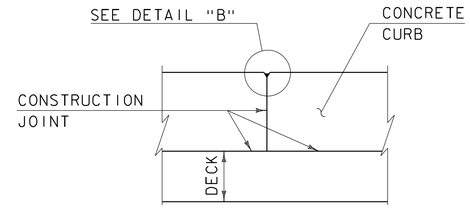

SECTION B - B
(NOT TO SCALE)

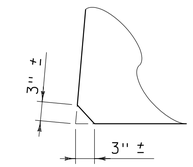

ACUTE ANGLE CLIP DETAIL
(NOT TO SCALE)

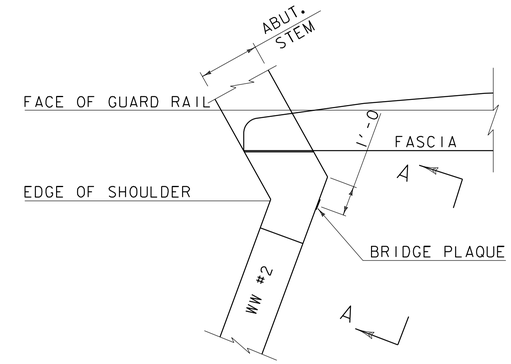

PLAN

CONCRETE CURB JOINT NOTES

1. CONCRETE CURBS MAY BE PLACED IN ONE CONTINUOUS OPERATION IF AN APPROVED SHRINKAGE REDUCING ADMIXTURE LISTED IN THE SPECIAL PROVISIONS IS USED WITH THE CONCRETE MIX DESIGN. PAYMENT FOR THE SHRINKAGE REDUCING ADMIXTURE WILL BE INCIDENTAL TO THE BRIDGE CURB CONCRETE ITEM.

2. IF THE CONTRACTOR CHOOSES NOT TO USE AN APPROVED SHRINKAGE REDUCING ADMIXTURE, THE CURBS SHALL BE CONSTRUCTED WITH CONSTRUCTION JOINTS SPACED AT A MAXIMUM OF 15'-0" CENTER TO CENTER AND 2'-0" MINIMUM FROM THE CENTER OF NEAREST BRIDGE RAILING POST.

3. ON MULTI-SPAN CONTINUOUS SUPERSTRUCTURES, REGARDLESS OF WHETHER APPROVED SHRINKAGE REDUCING ADMIXTURE IS USED, CURB JOINTS SHALL BE LOCATED OVER THE CENTERLINE OF PIERS AND 7'-0" EACH SIDE OF THE CENTERLINE OF EACH PIER.

4. WHEN CURB JOINTS ARE USED THE CURBS SHALL BE PLACED IN ALTERNATE SECTIONS WITH A MINIMUM OF 48 HOUR DELAY BETWEEN ADJACENT PLACEMENTS.

5. LONGITUDINAL REINFORCING SHALL BE CONTINUOUS THROUGH CURB CONSTRUCTION JOINTS. CURB STIRRUP BARS SHALL BE TURNED AS NECESSARY TO MAINTAIN COVER IN THE FLARED CURB ENDS.

6. THE JOINT SPACING AND DETAILS SHOWN SHALL APPLY TO SIDEWALKS WHEN SHOWN IN THE PLANS.

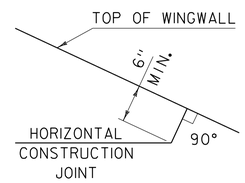

HORIZONTAL WINGWALL CONSTRUCTION JOINT
(NOT TO SCALE)

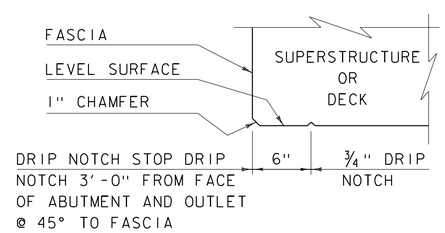

DRIP NOTCH DETAIL
(NOT TO SCALE)

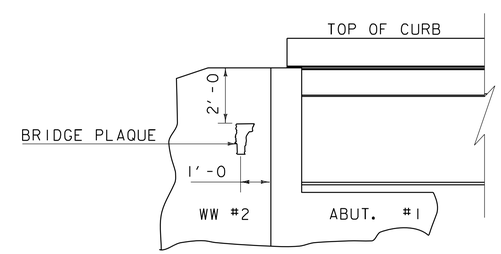

VIEW "A - A"

BRIDGE PLAQUE
(NOT TO SCALE)

THE BRIDGE PLAQUE WILL BE SUPPLIED BY THE AGENCY OF TRANSPORTATION AND SHALL BE INSTALLED BY THE CONTRACTOR AT ABUTMENT #1 ON THE RIGHT SIDE AS SHOWN OR AS DIRECTED BY THE ENGINEER.

PAYMENT FOR INSTALLATION OF THE BRIDGE PLAQUE SHALL BE INCIDENTAL TO THE ADJACENT CONCRETE.

REVISIONS

MAY 7, 2010	APPROVED FOR USE BY VAOT STRUCTURES SECTION
JUNE 4, 2010	MODIFIED AND ADDED TWO DETAILS
OCTOBER 10, 2012	MODIFIED HORZ. JOINT WINGWALL ADD 6" MIN. DIMENSION

CONCRETE DETAILS AND NOTES

VERMONT AGENCY OF TRANSPORTATION
STRUCTURES - SECTION

STRUCTURES DETAIL
SD-502.00

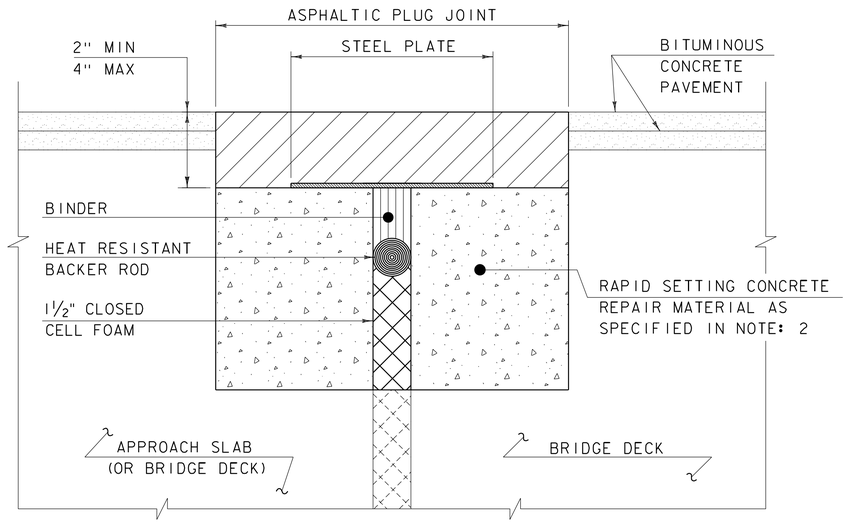

ASPHALTIC PLUG JOINT DETAIL - REHAB

NOTES:

1. THE CONTRACTOR SHALL REMOVE ALL ASPHALTIC PLUG JOINT MATERIAL AND DETERIORATED CONCRETE AS DIRECTED BY THE ENGINEER. REMOVAL OF THE FIRST 4 INCHES OF MATERIAL SHALL BE INCLUDED IN THE BID PRICE FOR ITEM 516.10 BRIDGE EXPANSION JOINT, ASPHALTIC PLUG. ANY REMOVAL OF MATERIAL GREATER THAN 4 INCHES SHALL BE INCLUDED IN THE BID PRICE OF ITEM 580.20 RAPID SETTING CONCRETE REPAIR MATERIAL WITH COARSE AGGREGATE.

2. THE CONTRACTOR SHALL REPLACE REMOVED MATERIAL THAT IS LESS THAN 4" FROM FINISHED GRADE WITH ASPHALTIC PLUG JOINT MATERIAL MEETING THE REQUIREMENTS OF SUBSECTION 707.15. ALL REMOVED MATERIAL THAT IS GREATER THAN 4 INCHES FROM FINISHED GRADE SHALL BE REPLACED WITH RAPID SETTING CONCRETE REPAIR MATERIAL WITH COARSE AGGREGATE MEETING THE REQUIREMENTS OF SUBSECTION 780.04.

3. REINFORCING STEEL NOT SHOWN FOR CLARITY.

4. PLACE 1/4" THICK BY 8" WIDE SECTIONS OF STEEL PLATE OVER THE CENTER OF THE MOVEMENT GAP. SECURE THE PLATES FROM MOVING BY INSERTING LOCATING PINS THROUGH THE PRE-STAMPED HOLES INTO BACKER ROD AND COVER WITH HOT BINDER. THE STEEL PLATES MAY BE OMITTED WHERE THE ENGINEER DETERMINES THAT THE APPROACH SLAB OR BRIDGE DECK WILL PROVIDE INADEQUATE SUPPORT AND WHERE VERTICAL MOVEMENT OF THE PLATES MIGHT OCCUR.

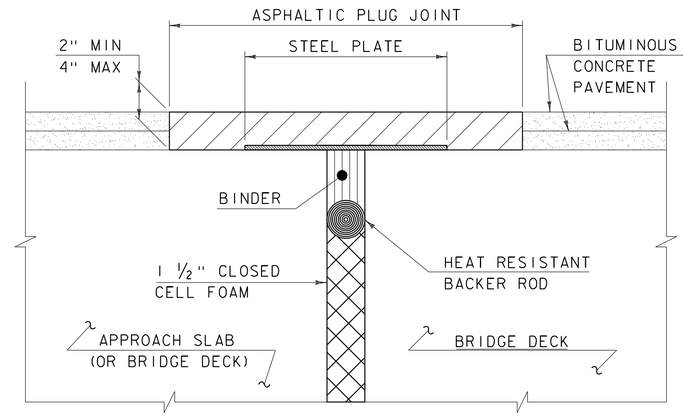

ASPHALTIC PLUG JOINT DETAIL "A" - NEW

NOTE:
PLACE 1/4" THICK BY 8" WIDE SECTIONS OF STEEL PLATE OVER THE CENTER OF THE MOVEMENT GAP. SECURE THE PLATES FROM MOVING BY INSERTING LOCATING PINS THROUGH THE PRE-STAMPED HOLES INTO BACKER ROD AND COVER WITH HOT BINDER.

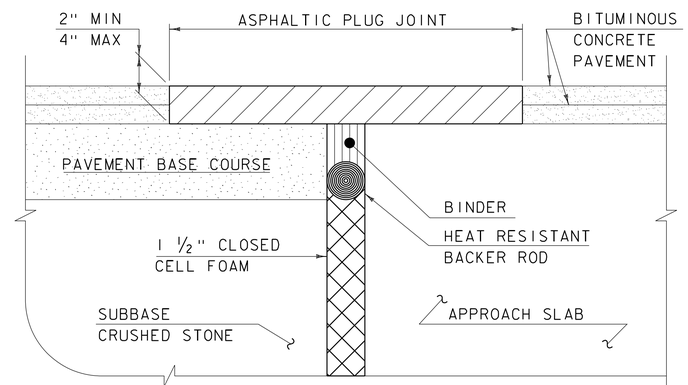

ASPHALTIC PLUG JOINT DETAIL "B" - NEW

ASPHALTIC PLUG JOINT NOTES

INSTALLATION:

1. LOCATE THE JOINT CENTRALLY OVER THE DECK OVERLAY EXPANSION GAP OR FIXED JOINT, MARKED OUT TO THE MANUFACTURER'S RECOMMENDED WIDTH.

2. REMOVE THE BITUMINOUS CONCRETE PAVEMENT FULL DEPTH AS SHOWN ON THE PLANS. THE PAVEMENT SHALL BE DRY AND SAW CUT TO THE LIMITS REQUIRED TO PLACE THE JOINT. A PNEUMATIC HAMMER AND CHISEL MAY BE USED ADJACENT TO THE CURB ONLY WHEN SAW CUTTING IS NOT POSSIBLE.

3. BLAST CLEAN THE JOINT AREA OF DEBRIS, ASPHALT AND SHEET MEMBRANE. THOROUGHLY DRY THE JOINT AREA WITH COMPRESSED AIR PRIOR TO APPLYING BINDER MATERIAL.

4. PLACE PROPERLY SIZED HEAT RESISTANT BACKER ROD IN THE MOVEMENT GAP ALLOWING FOR 1" +/- OF BINDER ABOVE THE ROD.

5. HEAT AND PLACE THE BINDER MATERIAL AS RECOMMENDED BY THE MANUFACTURER.

6. IMMEDIATELY AFTER TOP COATING, CAST AN ANTI-SKID MATERIAL OVER THE JOINT TO REDUCE THE RISK OF TRACKING.

WEATHER LIMITATIONS

APPLY BINDER MATERIAL ONLY WHEN THE FOLLOWING CONDITIONS PREVAIL OR AS RECOMMENDED BY THE MANUFACTURER:

1. THE AMBIENT AIR TEMPERATURE IS AT LEAST 10 DEG C (50 DEG F) AND RISING.

2. THE ROAD SURFACE IS DRY.

3. WEATHER CONDITIONS OR OTHER CONDITIONS ARE FAVORABLE AND ARE EXPECTED TO REMAIN SO FOR THE PERFORMANCE OF SATISFACTORY WORK.

DETAILS ON THIS SHEET ARE NOT TO SCALE.

REVISIONS	
MAY 7, 2010	APPROVED FOR USE BY VAOT STRUCTURES SECTION
AUGUST 29, 2011	ADD DETAIL "B" AND REV. NOTES

BRIDGE JOINT
ASPHALTIC PLUG

VERMONT AGENCY OF TRANSPORTATION
STRUCTURES - DIVISION

STRUCTURES DETAIL
SD-516.10

STRUCTURAL STEEL GENERAL NOTES:

1. ALL FIELD CONNECTIONS SHALL BE MADE WITH 7/8" DIAMETER HIGH-STRENGTH BOLTS IN 15/16" DIAMETER HOLES, PER SUBSECTION 506.19, UNLESS OTHERWISE SPECIFIED.
2. ALL HOLES IN THE WEBS OF THE FASCIA GIRDERS THAT ARE NOT OTHERWISE FILLED, SHALL BE FILLED WITH EITHER BUTTON HEAD OR HEX HEAD BOLTS. THESE BOLTS SHALL BE TIGHTENED IN ACCORDANCE WITH SUBSECTION 506.19.
3. ALL WELDING SHALL CONFORM TO THE PROVISIONS OF SUBSECTION 506.10.
4. ANY CONNECTIONS THAT ARE NOT DETAILED ON THE PLANS SHALL BE DETAILED BY THE FABRICATOR AND SUBMITTED TO THE STRUCTURES ENGINEER FOR APPROVAL.
5. STRUCTURAL STEEL MEMBERS DESIGNATED "CVN" IN THE PLANS SHALL BE CHARPY V-NOTCH TESTED IN ACCORDANCE WITH SUBSECTION 714.01 OF THE STANDARD SPECIFICATIONS.
6. ENDS OF GIRDERS ARE TO BE VERTICAL IN THEIR FINAL POSITION.
7. AFTER SUPERSTRUCTURE STEEL HAS BEEN ERECTED, ELEVATIONS ALONG THE TOP OF THE GIRDERS SHALL BE TAKEN AS DIRECTED BY THE RESIDENT ENGINEER FOR USE IN DETERMINING FINISHED GRADES.

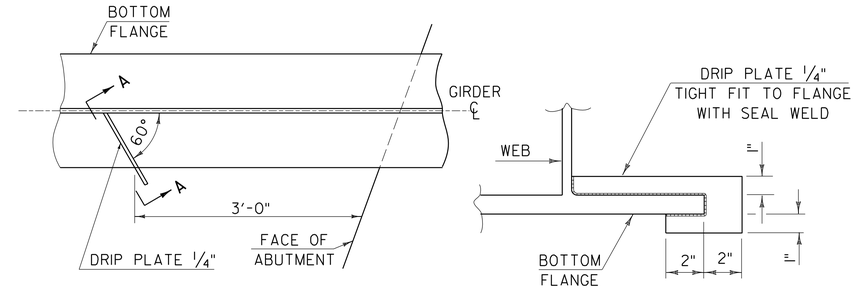

PLAN DRIP PLATE

SECTION A - A

NOTE: DRIP PLATES SHALL BE PLACED ON OUTSIDE EDGE OF FASCIA GIRDERS ON THE HIGH SIDE OF ALL PIERS AND ABUTMENTS OR AS INDICATED ON PROJECT PLANS.

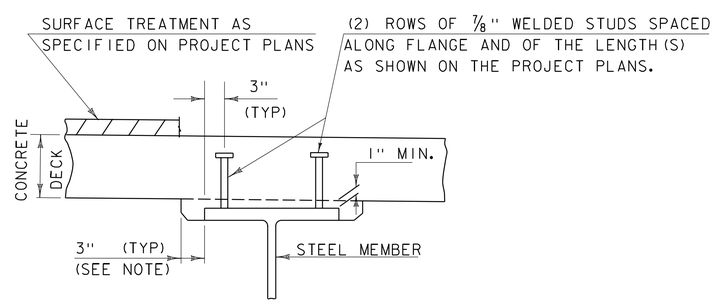

NOTE:
THE 3" HORIZONTAL SECTION MAY BE ELIMINATED FOR FORMING SYSTEMS DESIGNED FOR THE CONSTRUCTION OF VERTICAL HAUNCHES. ANY VOIDS RESULTING FROM FORMING SYSTEM ELEMENTS SHALL BE FILLED WITH JOINT SEALER, POLYURETHANE MEETING THE REQUIREMENTS OF SECTION 524. THE COST OF THE JOINT SEALER, POLYURETHANE SHALL BE INCIDENTAL TO THE ADJACENT CONCRETE.

HAUNCH AND SHEAR CONNECTOR DETAIL

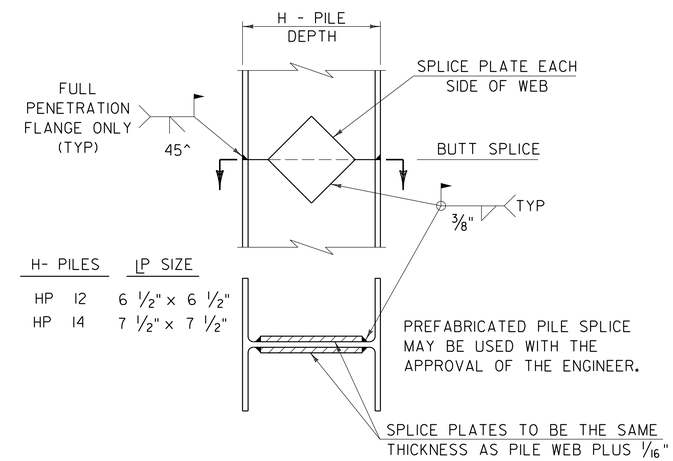

H- PILES	LP SIZE
HP 12	6 1/2" x 6 1/2"
HP 14	7 1/2" x 7 1/2"

DETAIL OF PILE SPLICE

DETAILS ON THIS SHEET ARE "NOT TO SCALE" UNLESS NOTED OTHERWISE.

REVISIONS	
MAY 7, 2010	APPROVED FOR USE BY VAOT STRUCTURES SECTION
JUNE 4, 2010	MODIFIED NOTES

STRUCTURAL STEEL DETAILS & NOTES

VERMONT AGENCY OF TRANSPORTATION
STRUCTURES - SECTION

STRUCTURES DETAIL

SD-601.00

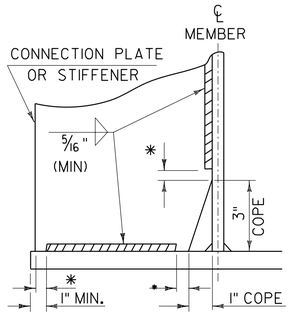

WELD TERMINATION AND COPING DETAILS FOR STEEL MEMBERS

*NO WELD FOR 3/8" MIN. 7/8" MAX. (EXCEPT MUST MAINTAIN 1" MINIMUM FROM EDGE OF FLANGE)

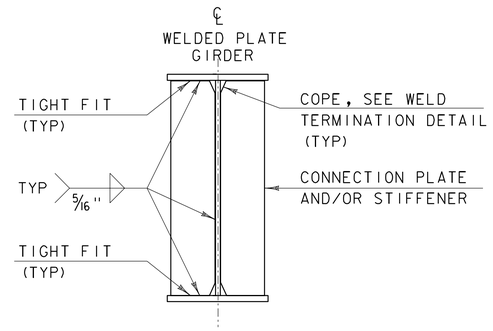

INTERMEDIATE CONNECTION PLATES AND/OR STIFFENERS FOR WELDED PLATE GIRDERS

INTERMEDIATE DETAIL IS ONLY USED WHEN PLATE DOES NOT OCCUR AT AN ABUTMENT OR PIER.

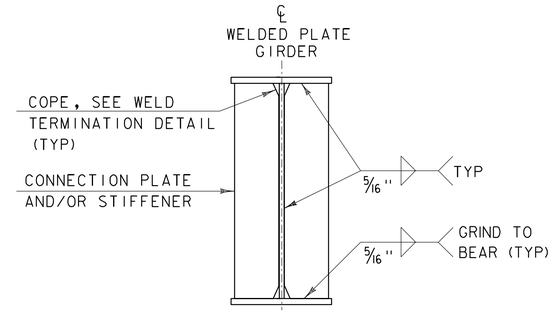

ABUTMENT BEARING STIFFENERS AND/OR CONNECTION PLATES FOR WELDED PLATE GIRDERS

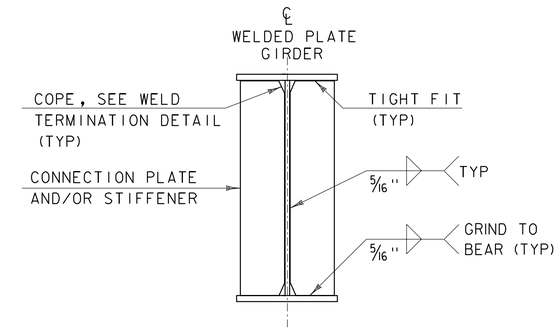

PIER BEARING STIFFENERS AND/OR CONNECTION PLATES FOR WELDED PLATE GIRDERS

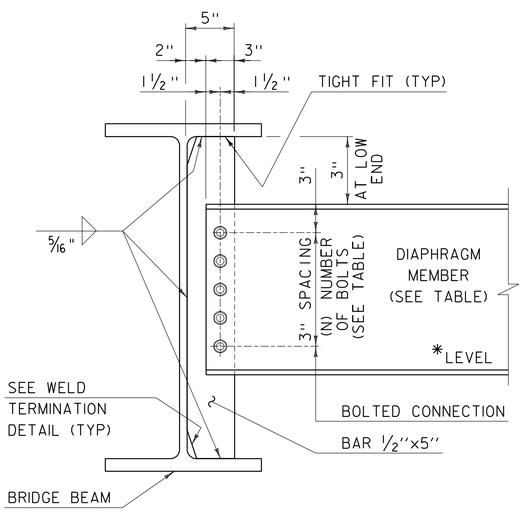

DEPTH		DIAPHRAGM MEMBER	(N) BOLTS
ROLLED BEAM	24" 30"	C15x33.9	4
	31" 36"	MC18x42.7	5
	37" 42"	W21x44	6
PLATE GIRDER WEB	31" 36"	W27x84	7
	37" 42"	W33x118	9
	43" 48"	W36x135	10

INTERMEDIATE DIAPHRAGMS FOR 24" TO 48" BRIDGE BEAMS

* IF CLEARANCE CANNOT BE MET, DIAPHRAGM MAY BE SLOPED.

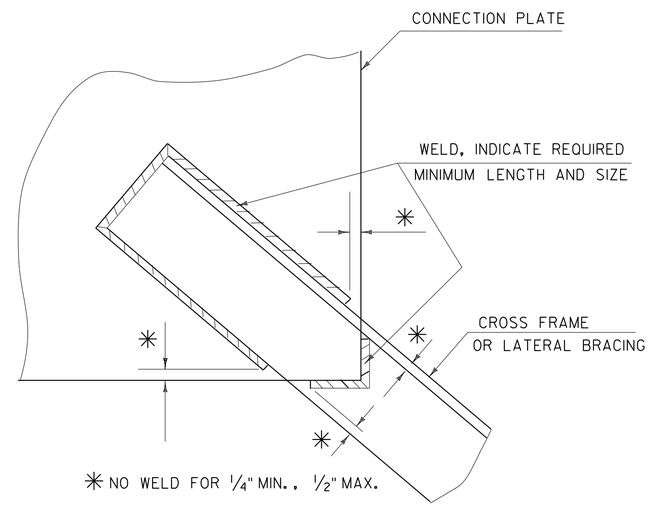

WELD LOCATION DETAIL AT CROSS FRAMES AND LATERAL BRACING

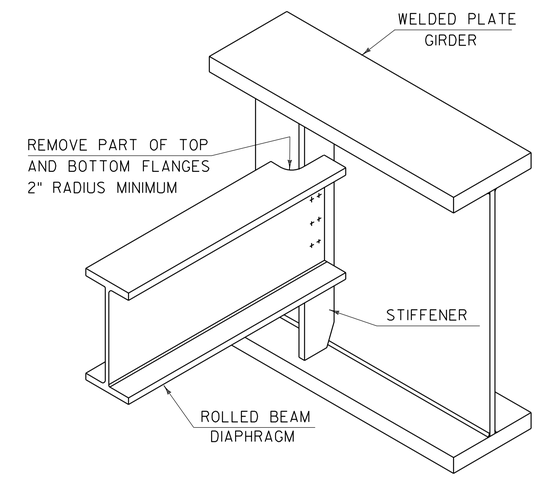

SEE CONTRACT DRAWINGS FOR SIZES OF MEMBERS AND CONNECTION DETAILS

ROLLED BEAM USED AS DIAPHRAGM

DETAILS ON THIS SHEET ARE "NOT TO SCALE" UNLESS NOTED OTHERWISE.

REVISIONS	
MAY 7, 2010	APPROVED FOR USE BY VAOT STRUCTURES SECTION
MAY 2, 2011	ADD INTERMEDIATE DIAPHRAGMS DETAIL & ADD NOT TO SCALE NOTE

STRUCTURAL STEEL PLATE GIRDER DETAILS AND NOTES

VERMONT AGENCY OF TRANSPORTATION
STRUCTURES - SECTION

STRUCTURES DETAIL

SD-602.00