THE STATE OF NEW HAMPSHIRE
DEPARTMENT OF TRANSPORTATION

CONSTRUCTION PLANS

NH PROJECT 14957
US ROUTE 4 (BRIDGE STREET)

DESIGN DATA	
AVERAGE DAILY TRAFFIC 2008	13,000
AVERAGE DAILY TRAFFIC 2032	22,000
PERCENT OF TRUCKS	6.5%
DESIGN SPEED	35 MPH
LENGTH OF PROJECT	1,665 FT

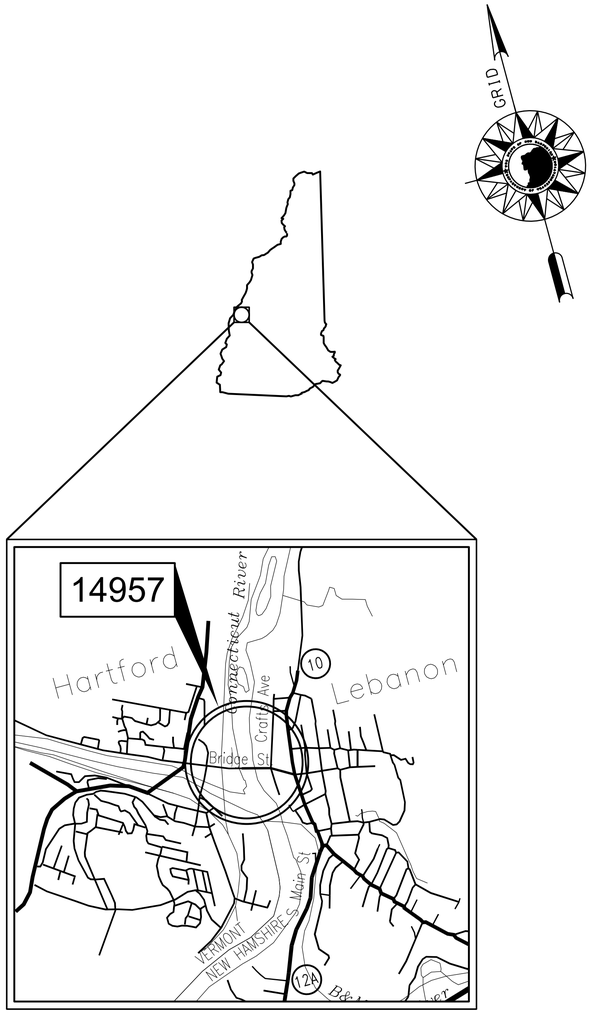

LOCATION MAP

1 ½ 0 1 2 mi.

GRAPHIC SCALE: 1"=1/2 MILE

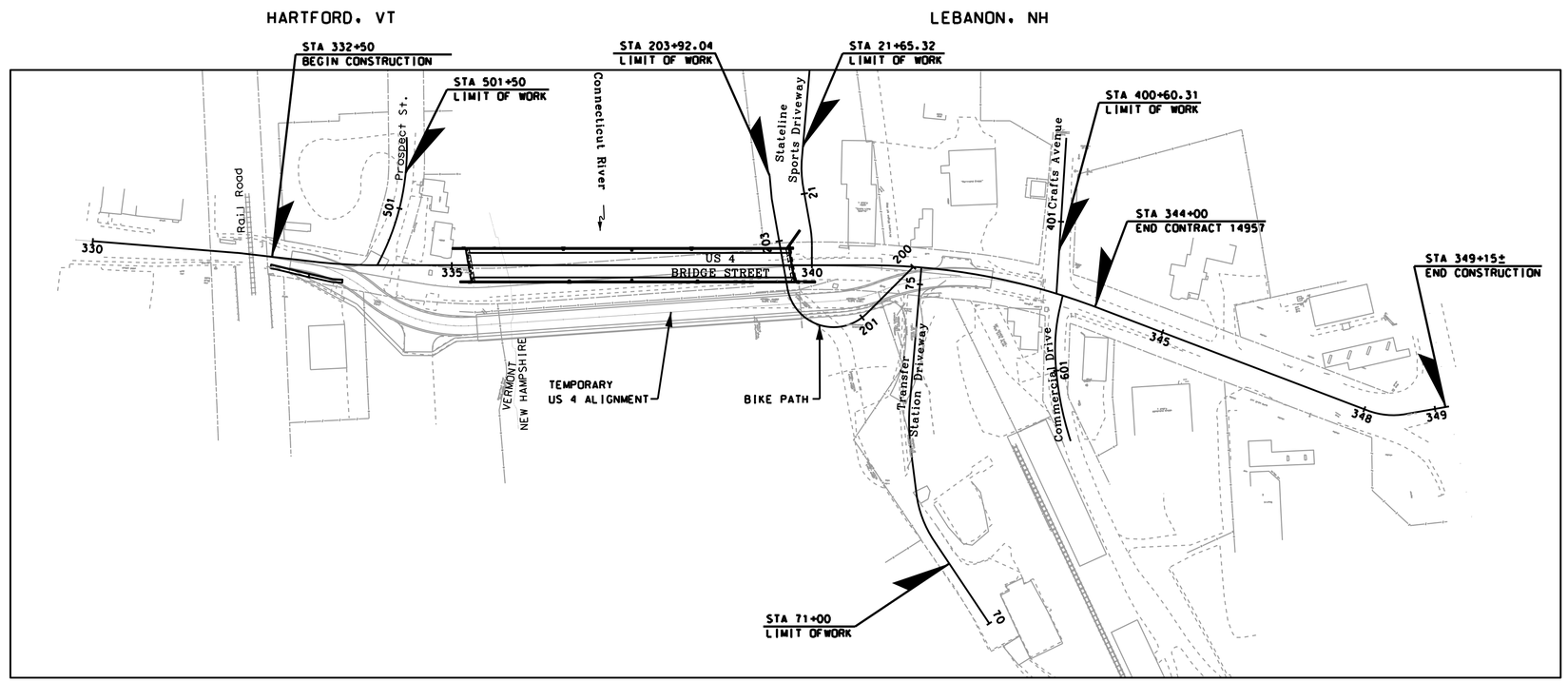

LEBANON - HARTFORD

COUNTY OF GRAFTON

SCALE: 1" = 100'

DRAWN BY ARM	DATE MAY 2013
CHECKED BY DEM	DATE MAY 2013

STRUCTURAL PLANS PREPARED BY:
NEW HAMPSHIRE DEPARTMENT OF TRANSPORTATION
7 HAZEN DRIVE, CONCORD, NH 03302
TEL (603) 271-3734 FAX (603) 271-3914

STAMP:

ELECTRICAL PLANS PREPARED BY:
FAY, SPOFFORD & THORNDIKE, LLC
ENGINEERS • PLANNERS • SCIENTISTS • LANDSCAPE ARCHITECTS
288 SOUTH RIVER ROAD, BUILDING C, BEDFORD, NH 03110
TEL (603) 669-2000 FAX (603) 668-2670

STAMP:

CIVIL PLANS PREPARED BY:
FAY, SPOFFORD & THORNDIKE, LLC
ENGINEERS • PLANNERS • SCIENTISTS • LANDSCAPE ARCHITECTS
288 SOUTH RIVER ROAD, BUILDING C, BEDFORD, NH 03110
TEL (603) 669-2000 FAX (603) 668-2670

STAMP:

SEWER PLANS PREPARED BY:
FAY, SPOFFORD & THORNDIKE, LLC
ENGINEERS • PLANNERS • SCIENTISTS • LANDSCAPE ARCHITECTS
288 SOUTH RIVER ROAD, BUILDING C, BEDFORD, NH 03110
TEL (603) 669-2000 FAX (603) 668-2670

STAMP:

NHDOT THE STATE OF NEW HAMPSHIRE DEPARTMENT OF TRANSPORTATION

RECOMMENDED FOR APPROVAL:

DIRECTOR OF PROJECT DEVELOPMENT — DATE

MUNICIPAL HIGHWAYS ENGINEER
BUREAU OF PLANNING AND COMMUNITY ASSISTANCE — DATE

APPROVED:

ASSISTANT COMMISSIONER AND CHIEF ENGINEER — DATE

U. S. DEPARTMENT OF TRANSPORTATION
FEDERAL HIGHWAY ADMINISTRATION

APPROVED:

DIVISION ADMINISTRATOR — DATE

FEDERAL PROJECT NO.	STATE PROJECT NO.	SHEET NO.	TOTAL SHEETS
	14957	1	157

INDEX OF SHEETS

SHEET NO.	DESCRIPTION
1	TITLE PAGE
2	INDEX OF SHEETS & GENERAL NOTES
3,4	STANDARD SYMBOLS
5-7	TYPICAL SECTIONS
8-11	SUMMARY OF QUANTITIES
12	EXTENDED MICROPOOL DETENTION POND GRADING AND DETAILS
13-15	MISCELLANEOUS DETAILS
16-19	ELECTRICAL DETAILS
20-21	STANDARD SEWER DETAILS
22	WATER MAIN RELOCATION DETAILS
23	PEDESTRIAN CROSSWALK FLASHER AND FOUNDATION DETAIL
24	DRIVEWAY DETAILS
25	SIDEWALK CURB RAMPS WITH DETECTABLE WARNINGS
26-96	BRIDGE PLANS
	ROADWAY PLANS
97-101	GENERAL PLANS
102-103	DRAINAGE NOTES
104-107	US 4 PROFILES
108-110	SIDE ROAD DRIVEWAY PROFILES
111-115	CURBING, PAVEMENT & LIGHTING LAYOUT PLANS
116	INTERSECTION GRADING PLANS
117-118	WATER MAIN REPLACEMENT PLAN
119-120	SANITARY SEWER REPLACEMENT PLAN
121	SANITARY SEWER REPLACEMENT PROFILE & NOTES
122-126	PAVEMENT MARKING AND SIGNAGE PLANS
127	SIGN TEXT LAYOUT
128	CONSTRUCTION PHASING PLAN
	CROSS SECTIONS
129-146	US 4 SECTIONS
147-148	PROSPECT ST. SECTIONS
149-150	CRAFTS AVE. SECTIONS
151-155	TRANSFER STATION DRIVEWAY SECTIONS
155-157	STATELINE DRIVEWAY SECTIONS

GENERAL NOTES

1. FOR STANDARD PLANS, SEE "STANDARD PLANS FOR ROAD CONSTRUCTION" DATED 2010 (A BOUND BOOK) AND CURRENT UPDATES ON NHDOT WEBSITE WWW.NH.GOV/DOT.
2. HIGH TENSION OVERHEAD TRANSMISSION LINES ARE LOCATED THROUGHOUT THE PROJECT WITH CROSSINGS AT VARIOUS LOCATIONS AND RUNNING ALONG THE ROAD THROUGHOUT THE PROJECT EVEN ON REGULAR POLES. THE CONTRACTOR IS ADVISED THAT EXTREME CAUTION WILL BE REQUIRED IN THE OPERATION OF EQUIPMENT, ESPECIALLY CRANES AND PILE DRIVING EQUIPMENT.
3. MODIFY SUPERELEVATION ON EXISTING CURVES BY THE USE OF A LEVELING COURSE TO THE RATES INDICATED ON THE PLANS OR AS ORDERED.
4. EXISTING DELINEATORS AND WITNESS MARKERS THAT ARE REMOVED AND DETERMINED BY THE ENGINEER TO BE IN ACCEPTABLE CONDITION SHALL BE RESET (SUBSIDIARY). ADDITIONAL DELINEATORS AND WITNESS MARKERS ORDERED WILL BE PAID UNDER THE APPROPRIATE ITEMS OF THE CONTRACT.
5. NO EXISTING MONUMENTS, BOUNDS, OR BENCHMARKS SHALL BE DISTURBED WITHOUT FIRST MAKING PROVISIONS FOR RELOCATION.
6. PERFORM ALL WORK WITHIN THE EXISTING RIGHT-OF-WAY, UNLESS OTHERWISE SHOWN ON THE PLANS OR AS ORDERED BY THE ENGINEER.
7. REMOVE UNPROTECTED PROJECT MARKERS (SUBSIDIARY).
8. SURVEY DATA FOR THIS PROJECT WAS COLLECTED BY SDR AND THE FIELD NOTES CAN BE FOUND IN THE FIELD BOOK(S) 13303. COORDINATES ARE NEW HAMPSHIRE STATE PLANE COORDINATES OF NAD83, 1986 ADJUSTMENT AND THE BEARINGS ARE GRID. ELEVATIONS ARE REFERENCED TO NGVD 1929.
9. QUANTITIES FOR EMBANKMENT AND EXCAVATION FOR SLOPE ROUNDINGS AS SHOWN ON THE TYPICALS HAVE NOT BEEN CALCULATED AND ARE NOT INCLUDED IN THE QUANTITY SUMMARIES, AND ARE CONSIDERED SUBSIDIARY TO THE APPROPRIATE 203 ITEMS.
10. PAVEMENT JOINT ADHESIVE, ITEM 403.6 SHALL BE APPLIED TO ALL EXPOSED LONGITUDINAL JOINTS FOR ALL PAVEMENT COURSES PRIOR TO PLACEMENT OF EACH PAVEMENT COURSE PASS. PAVEMENT JOINT ADHESIVE SHALL ALSO BE APPLIED AT PAVEMENT MATCH TRANSVERSE JOINTS AND ALL PAVEMENT JOINTS ACROSS THE LENGTH OF BRIDGE DECK (FOR BOTH WEARING AND BASE COURSES). APPLICATION OF JOINT ADHESIVE SHALL ALSO BE PLACED ALONG BRIDGE CURBES AND U-BACK WINGWALL CURBS FOR ALL PAVEMENT COURSES.

THE FOLLOWING GENERAL NOTES WILL BE USED ON THIS PROJECT:

1			4	5		7	8	9	10		

STATE OF NEW HAMPSHIRE

DEPARTMENT OF TRANSPORTATION • BUREAU OF HIGHWAY DESIGN

INDEX OF SHEETS AND GENERAL NOTES

REVISION DATE	DGN	STATE PROJECT NO.	SHEET NO.	TOTAL SHEETS
1/20/11	14957index_sheet	14957	2	157

GENERAL

EDGE OF PAVEMENT — PROPOSED ROADWAY
TRAVELED WAY — existing roadway — (pavement removed outside slope lines)

DRIVEWAYS — (label surface type)

BUILDINGS — (building to be removed) — (label house or type of building)

FOUNDATION — (label type)

LEACH FIELD — leach field

BRIDGE CROSSINGS — STREAM — OVERPASS

STEPS AND WALK — (label type)

INTERMITTENT WATER COURSE

SHORE LINE — river/stream — pond — (label name of water body)

POTENTIAL WET AREA SYMBOL

BRUSH OR WOODS LINE

TREES (PLANS) — (deciduous) (coniferous) (stump)
(show station, circumference in feet & type)

TREE OR STUMP (CROSS-SECTIONS)

HEDGE — (label type)

MONITORING WELL — mon

WELL

FLAG POLE — fp

ORIGINAL GROUND (TYPICALS)

ROCK OUTCROP

ROCK LINE (TYPICALS & SECTIONS ONLY)

GUARDRAIL (LABEL TYPE) — existing: bgr, cgr — PROPOSED: BGR, MEDIAN CGR

JERSEY BARRIER

CURB (LABEL TYPE)

STONE WALL

RETAINING WALL (LABEL TYPE) — (points toward retained ground)

FENCE (LABEL TYPE)

SIGNS — (single post) — (double post)

GAS PUMP — gp

FUEL TANK (ABOVE GROUND) — ft — (label size & type)

STORAGE TANK FILLER CAP — fc

SEPTIC TANK

GRAVE — gr

MAILBOX — mb

VENT PIPE — vp

SATELLITE DISH ANTENNA — da

PHONE — ph

GROUND LIGHT/LAMP POST — gl — lp

BORING LOCATION — B

TEST PIT — TP

INTERSTATE NUMBERED HIGHWAY — 293

UNITED STATES NUMBERED HIGHWAY — 3

STATE NUMBERED HIGHWAY — 102

WETLANDS

WETLAND DESIGNATION AND TYPE — 2 PUB2E

DELINEATED WETLAND — DW

PRIME WETLAND — PWET

ORDINARY HIGH WATER — OHW

TOP OF BANK — TOB

TOP OF BANK & ORDINARY HIGH WATER — TOBOHW

MEAN HIGH TIDE — MHT

TIDAL BUFFER ZONE — TBZ

HIGHEST OBSERVABLE TIDAL LINE — HOTL

SPECIAL AQUATIC SITE — SAS

VERNAL POOL — VP

INVASIVE SPECIES LABEL — I.S. I — I.S. II

INVASIVE SPECIES — INV

WATER FRONT BUFFER — WB50

NATURAL WOODLAND BUFFER — NWB150

PROTECTED SHORE LAND — PS250

FLOODPLAIN / FLOODWAY

500 YEAR FLOODPLAIN BOUNDARY — FP500

100 YEAR FLOODPLAIN BOUNDARY — FP100

FLOODWAY — FW

ENGINEERING

CONSTRUCTION BASELINE — 30 31 32

PC, PT, POT (ON CONST BASELINE)

PI (IN CONSTRUCTION BASELINES)

INTERSECTION OR EQUATION OF TWO LINES

ORIGINAL GROUND LINE (PROFILES AND CROSS-SECTIONS)

PROFILE GRADE LINE (PROFILES AND CROSS-SECTIONS)

CLEARING LINE — SLOPE LINE

SLOPE LINE

SLOPE LINE (FILL)

SLOPE LINE (CUT)

PROFILES AND CROSS SECTIONS:
ORIGINAL GROUND ELEVATION (LEFT) — 72.5
FINISHED GRADE ELEVATION (RIGHT) — 79.14

SHEET 1 OF 2

STATE OF NEW HAMPSHIRE
DEPARTMENT OF TRANSPORTATION • BUREAU OF HIGHWAY DESIGN

STANDARD SYMBOLS

FAY, SPOFFORD & THORNDIKE, LLC

REVISION DATE	DGN	STATE PROJECT NO.	SHEET NO.	TOTAL SHEETS
3-15-13	stdsymb1	14957	3	157

DRAINAGE

MANHOLE
CATCH BASIN — cb — (existing) — (PROPOSED)
DROP INLET — di
DRAINAGE PIPE (existing) — (label size & type)
DRAINAGE PIPE (PROPOSED)
UNDERDRAIN (existing) W/ FLUSHING BASIN — fb — (label size & type)
UNDERDRAIN (PROPOSED) W/ FLUSHING BASIN
show direction of flow
HEADER (existing & PROPOSED) — (with stone outlet protection)
END SECTION (existing & PROPOSED) — METAL or PLASTIC — RCP
OPEN DITCH (PROPOSED)
EROSION CONTROL/ STONE SLOPE PROTECTION

BOUNDARIES / RIGHT-OF-WAY

RIGHT-OF-WAY LINE — (label type)
RR RIGHT-OF-WAY LINE
PROPERTY LINE — PL
PROPERTY LINE (COMMON OWNER) — Z
TOWN LINE — BOW / CONCORD
COUNTY LINE — COOS / GRAFTON
STATE LINE — MAINE / NEW HAMPSHIRE
NATIONAL FOREST
LCHIP CONSERVATION EASEMENT
BENCH MARK / SURVEY DISK
BOUND — bnd — (PROPOSED)
STATE LINE/ TOWN LINE MONUMENT — S/L — T/L
NHDOT PROJECT MARKER
IRON PIPE OR PIN — ip
DRILL HOLE IN ROCK — dh
TAX MAP AND LOT NUMBER — 156 / 14 — 1642/341 — 6.80 Ac.±
PROPERTY PARCEL NUMBER — 12
HISTORIC PROPERTY — H

UTILITIES

existing — PROPOSED

TELEPHONE POLE
POWER POLE
JOINT OCCUPANCY
MISCELLANEOUS/UNKNOWN POLE
GUY POLE OR PUSH BRACE
(plot point at face not center of symbol)
LIGHT POLE
LIGHT ON POWER POLE
LIGHT ON JOINT POLE

POLE STATUS:
REMOVE, LEAVE, PROPOSED, OR TEMPORARY AS APPLICABLE e.g.: R, L, P+04 25.0', T+04 25.0'

RAILROAD — (label ownership)
RAILROAD SIGN
RAILROAD SIGNAL
UTILITY JUNCTION BOX — jb — JB
OVERHEAD ELECTRIC — OE

UNDERGROUND UTILITIES
WATER (on existing lines label size, type and note if abandoned) — W — PW
SEWER — S — PS
TELEPHONE — T — PT
ELECTRIC — E — PE
GAS — G — PG
LIGHTING — L — PL
INTELLIGENT TRANSPORTATION SYSTEM — ITS — PITS
FIBER OPTIC — FO — PFO
WATER SHUT OFF
GAS SHUT OFF
HYDRANT

MANHOLES
SEWER — MHS
TELEPHONE — MHT
ELECTRICAL — MHE
GAS — MHG
UNKNOWN

FAY, SPOFFORD & THORNDIKE, LLC

TRAFFIC SIGNALS / ITS

existing — PROPOSED

MAST ARM (existing) — 30' MA (NOTE ANGLE FROM ℄)
OPTICOM RECEIVER
OPTICOM STROBE
TRAFFIC SIGNAL
PEDESTAL WITH PEDESTRIAN SIGNAL HEADS AND PUSH BUTTON UNIT
SIGNAL CONDUIT — C — PC
CONTROLLER CABINET — cc — CC
METER PEDESTAL — mp — MP
PULL BOX — pb — PB
LOOP DETECTOR (QUADRUPOLE) — (label size)
LOOP DETECTOR (RECTANGULAR) — (label size)
CAMERA POLE (CCTV)
FIBER OPTIC DELINEATOR — fod — FOD
FIBER OPTIC SPLICE VAULT — SVF
ITS EQUIPMENT CABINET — its — ITS
VARIABLE SPEED LIMIT SIGN
DYNAMIC MESSAGE SIGN
ROAD AND WEATHER INFO SYSTEM

CONSTRUCTION NOTES

CURB MARK NUMBER - BITUMINOUS — B-1
CURB MARK NUMBER - GRANITE — G-1
CLEARING AND GRUBBING AREA — A
DRAINAGE NOTE — 1
EROSION CONTROL NOTE — A
FENCING NOTE — A
GUARDRAIL NOTE — 1
ITS NOTE — 1
LIGHTING NOTE — A
TRAFFIC SIGNAL NOTE — 1

SHEET 2 OF 2

STATE OF NEW HAMPSHIRE
DEPARTMENT OF TRANSPORTATION • BUREAU OF HIGHWAY DESIGN

STANDARD SYMBOLS

REVISION DATE	DGN	STATE PROJECT NO.	SHEET NO.	TOTAL SHEETS
3-15-13	stdsymb2	14957	4	157

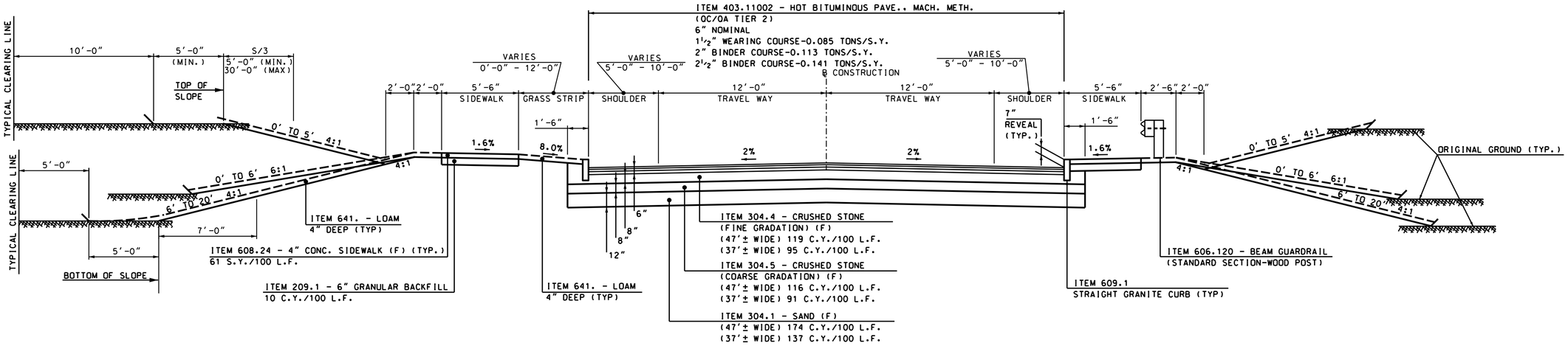

US 4

STA 333+79.80 TO STA 335+25.38
STA 339+72.88 TO STA 342+25
SCALE: ¼" = 1'-0"

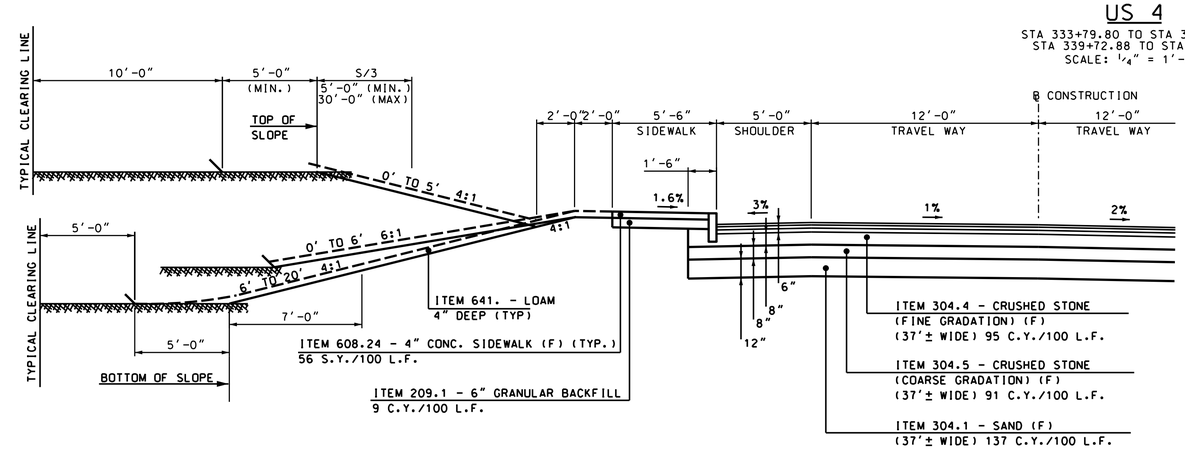

US 4
HIGH SIDE SUPERELEVATION DETAIL

STA 340+91.76 TO STA 343+10.00

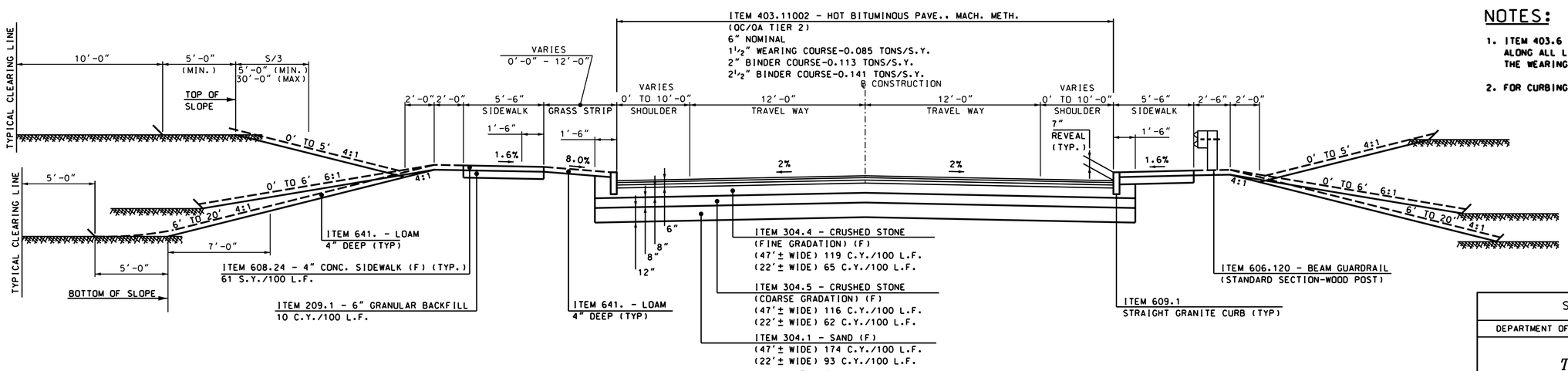

US 4

STA 332+50 TO STA 333+79.80
STA 342+25 TO STA 344+00
SCALE: ¼" = 1'-0"

NOTES:

1. ITEM 403.6 PAVEMENT JOINT ADHESIVE TO BE USED ALONG ALL LONGITUDINAL JOINTS ASSOCIATED WITH THE WEARING COURSE.
2. FOR CURBING SUPPORT SEE MISC. DETAIL SHEET 9.

NUMBER	DATE	STATION	STATION	DESCRIPTION

REVISIONS AFTER PROPOSAL

SDR PROCESSED	ARM	DATE 10/10
NEW DESIGN	DEM	DATE 05/13
SHEET CHECKED	TAT	DATE 05/13
AS BUILT DETAILS		DATE

STATE OF NEW HAMPSHIRE

DEPARTMENT OF TRANSPORTATION • BUREAU OF BRIDGE DESIGN

TYPICAL SECTIONS

FAY SPOFFORD AND THORNDIKE, LLC

DGN	STATE PROJECT NO.	SHEET NO.	TOTAL SHEETS
typ1	14957	5	157

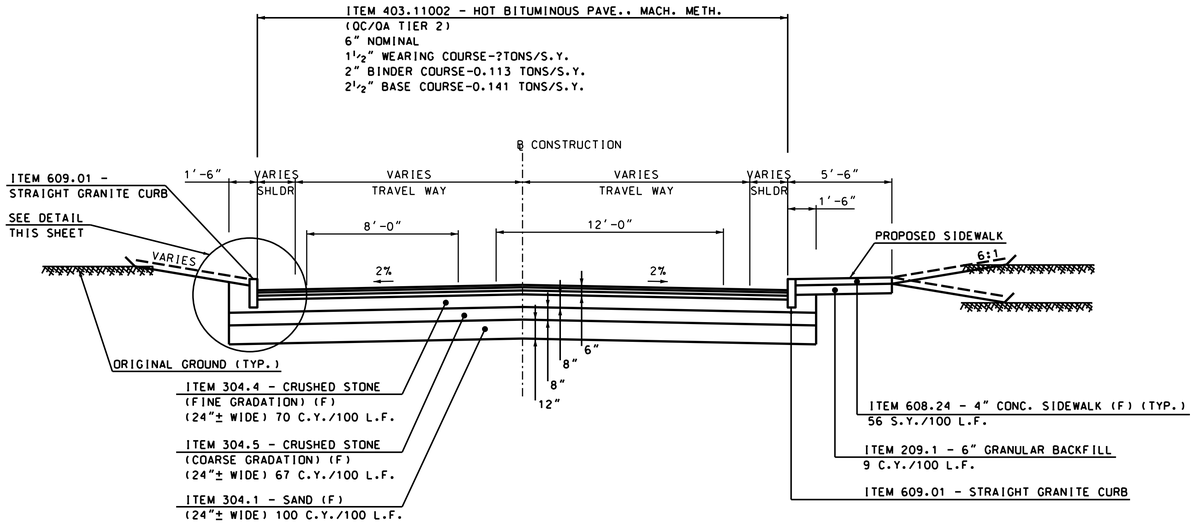

US 4

STA 344+00 TO STA 348+17±
SCALE: ¼" = 1'-0"

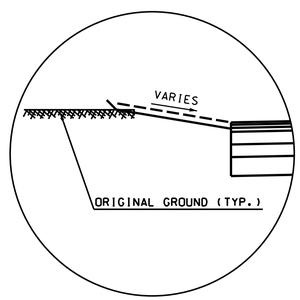

US 4

STA 346+05± TO STA 348+17±
SCALE: ¼" = 1'-0"

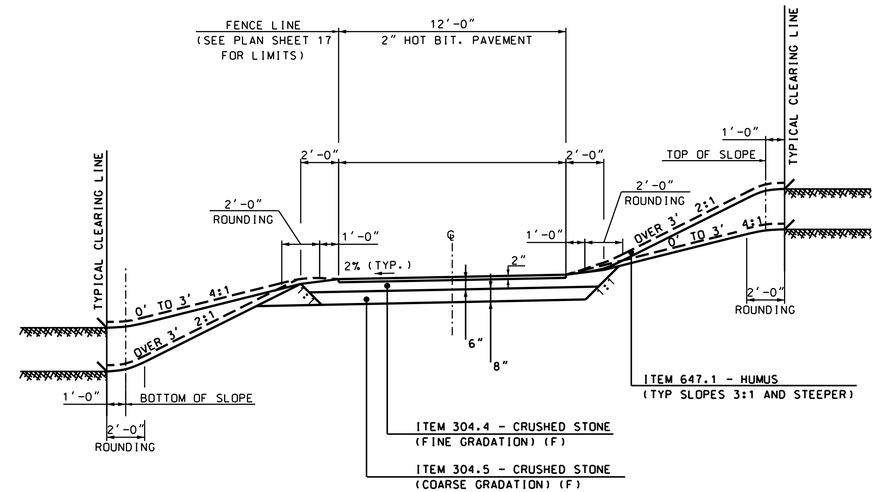

BIKE PATH TYPICAL SECTION

SCALE: ¼" = 1'-0"

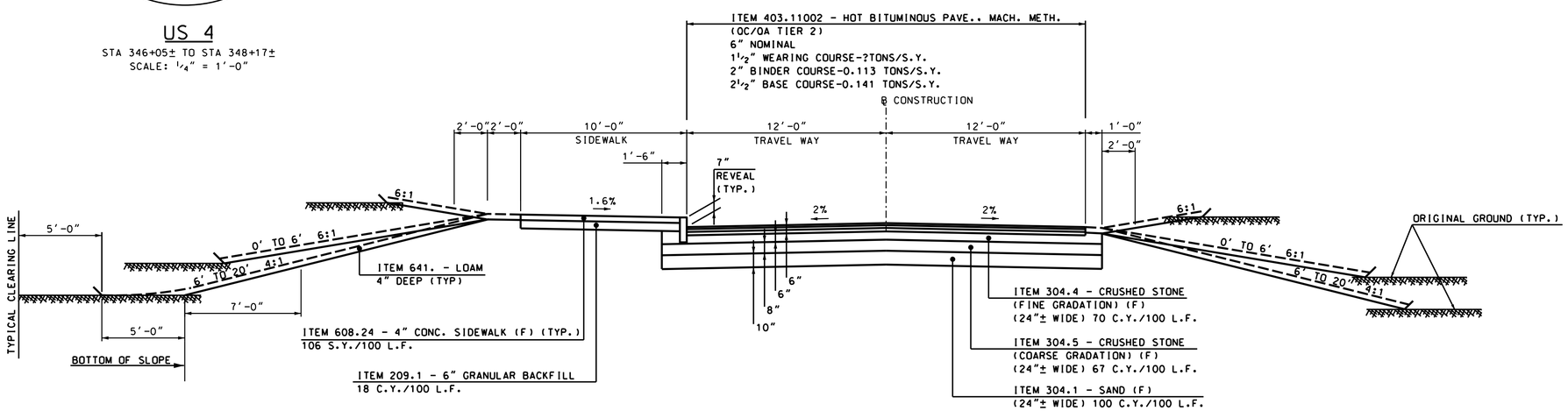

TRANSFER STATION DRIVEWAY

SCALE: ¼" = 1'-0"

REVISIONS AFTER PROPOSAL			
DESCRIPTION	STATION	STATION	DATE	NUMBER

SDR PROCESSED ARM	DATE 10/10	
NEW DESIGN DEM	DATE 05/13	
SHEET CHECKED TAT	DATE 05/13	
AS BUILT DETAILS	DATE	

FAY SPOFFORD AND THORNDIKE, LLC

STATE OF NEW HAMPSHIRE

DEPARTMENT OF TRANSPORTATION • BUREAU OF BRIDGE DESIGN

TYPICAL SECTIONS

DGN	STATE PROJECT NO.	SHEET NO.	TOTAL SHEETS
typ2	14957	6	157

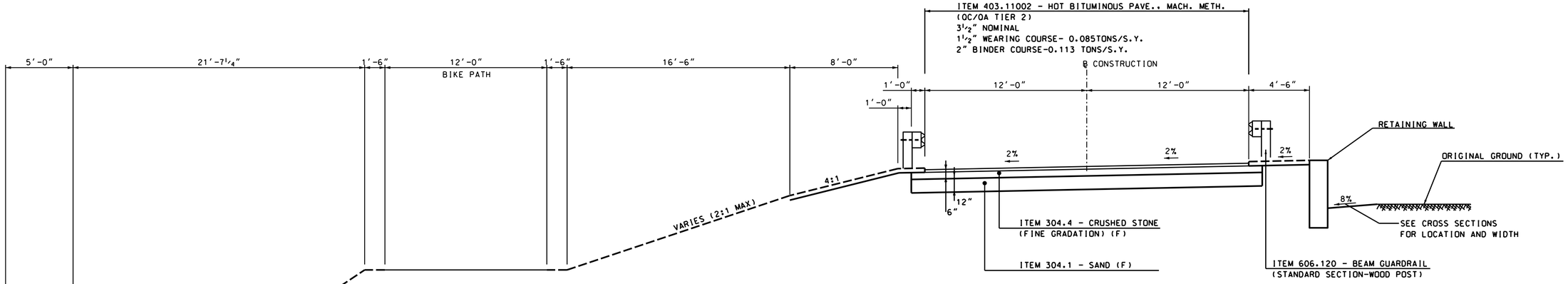

STATELINE SPORTS DRIVEWAY

STA 20+26± TO STA 20+78±
SCALE: ¼" = 1'-0"

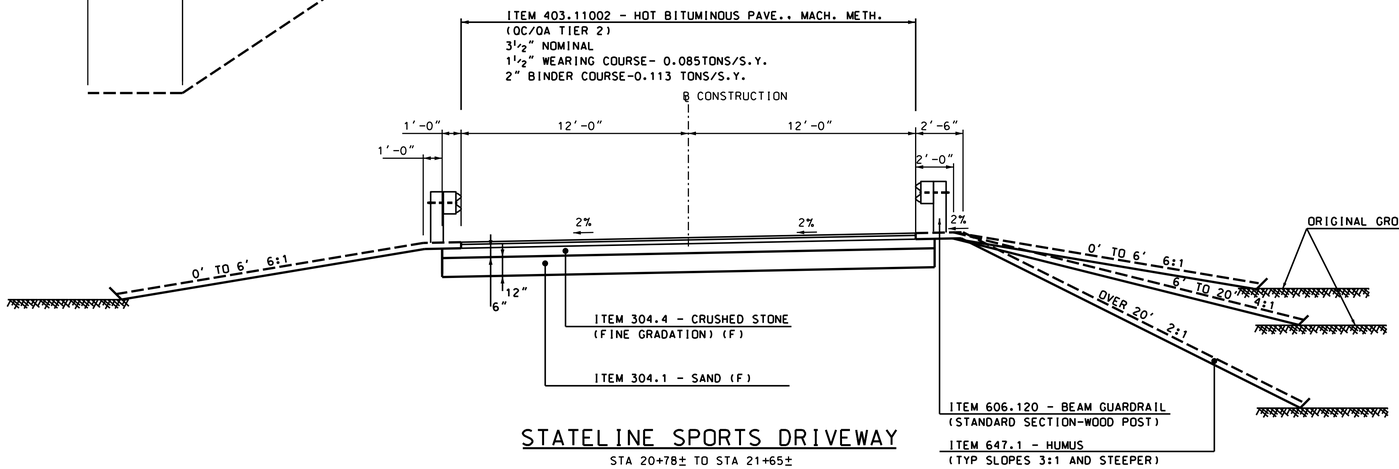

STATELINE SPORTS DRIVEWAY

STA 20+78± TO STA 20+65±
SCALE: ¼" = 1'-0"

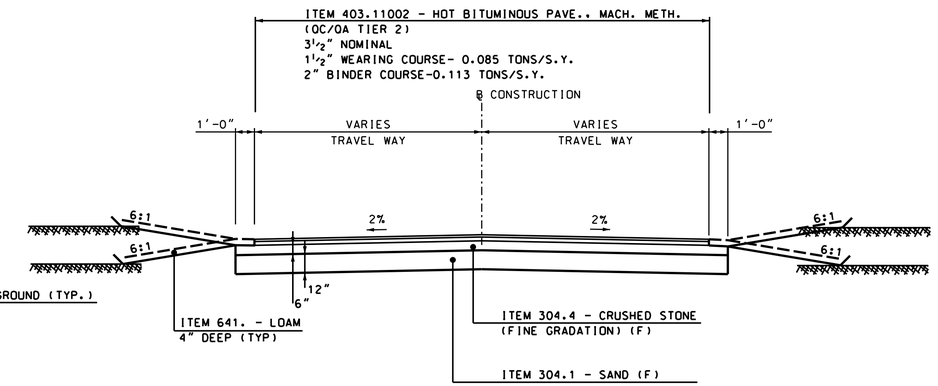

PROSPECT STREET

SCALE: ¼" = 1'-0"

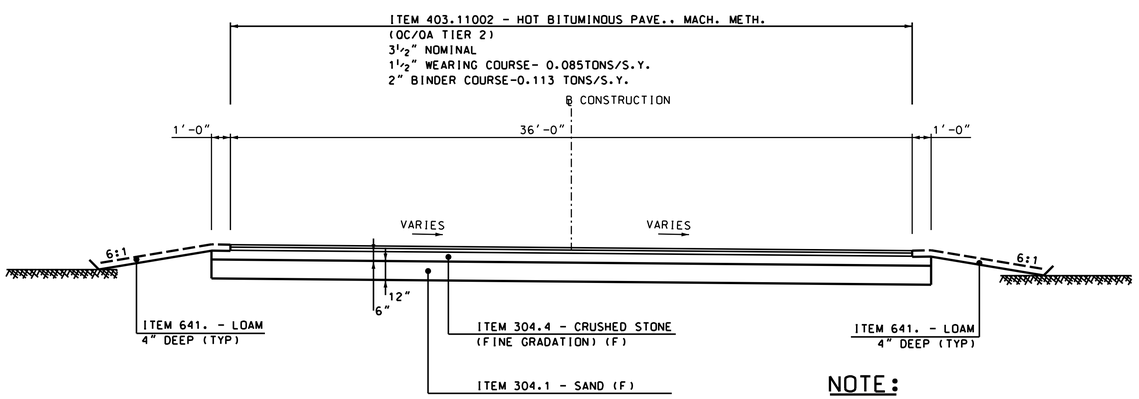

LISTEN INC. DRIVEWAY

SCALE: ¼" = 1'-0"

NOTE:

MATCH LISTIN. INC. DRIVEWAY APRON TO PARKING LOT CONSTRUCTED BY OTHERS.

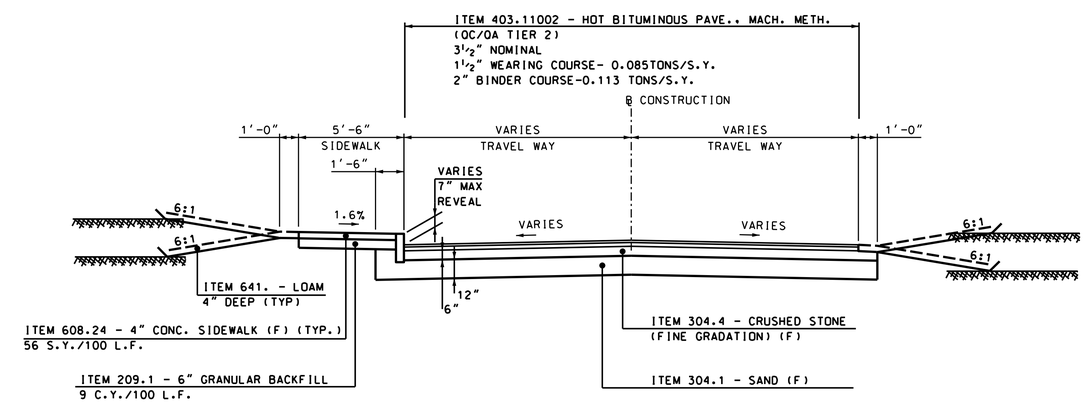

CRAFTS AVENUE

SCALE: ¼" = 1'-0"

REVISIONS AFTER PROPOSAL			
NUMBER	DATE	STATION	DESCRIPTION

SDR PROCESSED	ARM	DATE 10/10
NEW DESIGN	DEM	DATE 05/13
SHEET CHECKED	TAT	DATE 05/13
AS BUILT DETAILS		DATE

STATE OF NEW HAMPSHIRE

DEPARTMENT OF TRANSPORTATION ∘ BUREAU OF BRIDGE DESIGN

TYPICAL SECTIONS

DGN	STATE PROJECT NO.	SHEET NO.	TOTAL SHEETS
typ2	14957	7	157

FAY SPOFFORD AND THORNDIKE, LLC

DRAINAGE SUMMARY - 1

REF. NO.	202.41 REMOVAL OF EXISTING PIPE 0-24" DIAMETER	202.5 REMOVAL OF CATCH BASINS, DROP INLETS, AND MANHOLES	206.1 COMMON STRUCTURE EXCAVATION	585.2 STONE FILL, CLASS B	585.3 STONE FILL, CLASS C	593.421 GEOTEXTILE ; PERM. CONTROL CL.2, NON-WOVEN	603.0001 VIDEO INSPECTION	603.00215 15" R.C. PIPE, 2000D	603.00218 18" R.C. PIPE, 2000D	603.00230 30" R.C. PIPE, 2000D	603.30130 30" R.C. END SECTIONS	603.36112 12" ALUMINIZED STEEL END SECTION	603.36124 24" ALUMINIZED STEEL END SECTION	603.36130 30" ALUMINIZED STEEL END SECTION	603.36136 36" ALUMINIZED STEEL END SECTION	603.44024 24" CORR. POLYETHYLENE PIPE FOR SLOPE DRAINAGE	603.80024 24" PLASTIC PIPE (CORR. INTERIOR)	603.80212 12" PLASTIC PIPE (SMOOTH INTERIOR)	603.80215 15" PLASTIC PIPE (SMOOTH INTERIOR)	603.80218 18" PLASTIC PIPE (SMOOTH INTERIOR)	603.80230 30" PLASTIC PIPE (SMOOTH INTERIOR)	603.80236 36" PLASTIC PIPE (SMOOTH INTERIOR)	REMARKS
	LF	EA	CY	CY	CY	SY	LF	LF	LF	LF	EA	EA	EA	EA	EA	LF	LF	LF	LF	LF	LF	LF	
B1			0.2				25	25															
B2							23	23															
B3							16											16					
B4			15.8				128	128															
B5			23.5				42		42														
B6			12.5				17	17															
B7			11.2				7													7			
B8			3.8				5													5			
B9			26.0				32		32														
B10			23.9				73						1			73							
B11							44	44															
B12							10	10															
B13							28	28															
B14							9	9															
B15			5.3		3.9	18.3	0																
B16			1.1				12	12															
B17							16	16															
B18			5.1				79														79		
B19			5.1				6			6													
B20			64.3	24.1		46.8	275								1							275	
B21							0																
B22			2.4				35															35	
B23			14.5				46			46													
B24							0																NOT USED
B25			1.6				50										50						
B26							25	25															
B32			34.3				100		100														
B33							7											7					
B34			2.2				66										66						
T1							46														46		
T2							22											22					
T3			27.9	27.9		54.0	54							1							54		
T4			1.7		1.7	9.1	37					1						37					
T5			13.4	13.4		29.8	104			104	1												
C1			17.6				89															89	
C2			26.4				25	25															
C3			34.5				28															28	
E1	17	1					0																
E2	33	1					0																
E3	135	1					0																EXACT LOCATION OF DMH UNKNOWN
E4	4	1					0																
E5	89	1					0																
E8	120	1					0																
E9	60						0																
E10	19						0																
E11	27	1					0																
E12	25	1					0																
E13	60	1					0																LOCATION OF END OF PIPE UNKNOWN
E14							0																
E15	120	1					0																
E16		1					0																
E17							0																NOT USED
E18		1					0																
E19	65						0																LOCATION OF END OF PIPE UNKNOWN
E20	19						0																
E28	54						0																
E29							0																
TREATMENT BASIN			1501																				
SUB-TOTAL	847	12	1875	65	6	158	1581	362	174	156	1	1	1	1	1	73	116	82	0	12	179	427	
ROUNDING	3	0	5	5	0	2	19	3	6	4	0	0	0	0	0	2	4	8	0	3	1	3	
PARTICIPATING TOTAL	850	12	1880	70	6	160	1600	365	180	160	1	1	1	1	1	75	120	90	0	15	180	430	
NON-PARTICIPATING																							
B27							5												5				
B28			0.5				234										234						
B29							28	28															
B30							4	4															
B31			0.5				43		43														
B35							146										146						
E21	210						0																LOCATION OF END OF PIPE UNKNOWN
E22	225	1					0																
E23	21	1					0																
E24	14						0																
E25	24	1					0																LOCATION OF END OF PIPE UNKNOWN
E26	38						0																
SUB-TOTAL	**532**	**3**	**1**	**0**	**0**	**0**	**460**	**32**	**43**	**0**	**0**	**0**	**0**	**0**	**0**	**0**	**380**	**0**	**5**	**0**	**0**	**0**	
ROUNDING	**8**	**0**	**0.0**	**0.0**	**0.0**	**0.0**	**0**	**3**	**2**	**0**	**0**	**0**	**0**	**0**	**0**	**0**	**0**	**0**	**0**	**0**	**0**	**0**	
NON-PARTCIPATING TOTAL	**540**	**3**	**1**	**0**	**0**	**0**	**460**	**35**	**45**	**0**	**0**	**0**	**0**	**0**	**0**	**0**	**380**	**0**	**5**	**0**	**0**	**0**	
ITEM TOTAL	**1390**	**15**	**	**70**	**6**	**160**	**2060**	**400**	**225**	**160**	**1**	**1**	**1**	**1**	**1**	**75**	**500**	**90**	**5**	**15**	**180**	**430**	

*** - Subsidiary to Item 585.1** **** - Not an Item Total**

REVISIONS AFTER PROPOSAL

NUMBER	DATE	STATION	STATION	DESCRIPTION

SDR PROCESSED ARM DATE 08/11
NEW DESIGN DEM DATE 05/13
SHEET CHECKED TAT DATE 05/13
AS BUILT DETAILS DATE

FAY SPOFFORD AND THORNDIKE, LLC

STATE OF NEW HAMPSHIRE

DEPARTMENT OF TRANSPORTATION • BUREAU OF BRIDGE DESIGN

SUMMARY OF QUANTITIES

DGN	STATE PROJECT NO.	SHEET NO.	TOTAL SHEETS
	14957	8	157

DRAINAGE SUMMARY - 2

REF. NO.	604.0007 POLYETHYLENE LINER	604.12 CATCH BASINS, TYPE B		604.16 CATCH BASINS, TYPE F		604.165 CATCH BASINS TYPE F, 5-FOOT DIAMETER		604.166 CATCH BASINS TYPE F, 6-FOOT DIAMETER		604.22 DROP INLETS TYPE B		604.32 DRAINAGE MANHOLES		604.325 DRAINAGE MANHOLES, 5-FOOT DIAMETER		604.326 DRAINAGE MANHOLES, 6-FOOT		604.51 RECONSTRUCTING/ADJUSTING SEWER MANHOLES	604.9101 OUTLET CONTROL STRUCTURE	613.42 WATER QUALITY UNIT	622.1 STEEL WITNESS MARKERS	REMARKS
	EA	ACT. (U)	EST. (U)	ACT. (U)	EST. (U)	ACT. (U)	EST. (U)	ACT. (U)	EST. (U)	ACT. (U)	EST. (U)	ACT. (U)	EST. (U)	ACT. (U)	EST. (U)	ACT. (U)	EST. (U)	LF	EA	EA	EA	
B1	1	1	1.0																			ECCENTRIC CONE
B2	1	1	1.0																			
B3		1	1.0																			
B4		1	1.3																			SLAB TOP
B5	1			1	1.7																	
B6	1			1	1.8																	
B7	1			1	2.1																	
B8																				1		
B9	1			1	2.0																	
B10																1	1.8				1	
B11	1									1	1.0											
B12	1	1	1.0																			ECCENTRIC CONE
B13	1	1	1.0																			ECCENTRIC CONE
B14	1	1	1.0																			ECCENTRIC CONE
B15	1	1	1.2																		1	ECCENTRIC CONE
B16	1	1	1.2																			ECCENTRIC CONE
B17	1	1	1.0																			ECCENTRIC CONE
B18	1					1	1.5															
B19	1					1	1.5															
B20														1	1.2						1	
B21	1									1	1.4											
B22	1					1	1.4															
B23	1					1	1.6															
B24																						NOT USED
B25	1			1	1.3																	ECCENTRIC CONE
B26	1			1	1.0																	
B32												1	1.1									
B33				1	1.0																	
B34	1			1	1.4																	
T1														1	1.0							
T2	1			1	1.0																	
T3														1	1.0						1	
T4	1	1	1.0																		1	
T5																			1		1	
C1	1							1.0	1.6													
C2	1					1	1.4															ECCENTRIC CONE
C3	1			1	1.7																	
E1																						
E2																						
E3																						
E4																						
E5																						
E8																						
E9																						
E10																						
E11																						
E12																						
E13																						
E14																		0.2				
E15																						
E16																						
E17																						NOT USED
E18																						
E19																						
E20																						
E28																						
E29																		3.0				
SUB-TOTAL	26	11	11.7	10	15.0	5	7.4	1	1.6	2	2.4	1	1.1	3	3.2	1	1.8	3.2	1	1	6	
ROUNDING	0	0	0.3	0	0	0	0.6	0	0.4	0	0.6	0	0.9	0	0.8	0	0.2	0.8	0	0	0	
PARTICIPATING TOTAL	26	11	12.0	10	15.0	5	8.0	1	2.0	2	3.0	1	2.0	3	4.0	1	2.0	4.0	1	1	6	
NON-PARTICIPATING																						
B27	1			1	1.0																	
B28																1	1.0					
B29	1			1	1.0																	
B30	1	1	1.0																			
B31	1	1	1.1																			
B35														1	1.0							
E21																						
E22																						
E23																						
E24																						
E25																						
E26																						
SUB-TOTAL	4	2	2.1	2	2.0	0	0.0	0	0.0	0	0.0	0	0.0	1	1.0	1	1.0	0.0	0	0	0	
ROUNDING	0	0	0.9	0	0.0	0	0.0	0	0.0	0	0.0	0	0.0	0	0.0	0	0.0	0.0	0	0	0	
NON-PARTCIPATING TOTAL	4	2	3.0	2	2.0	0	0.0	0	0.0	0	0.0	0	0.0	1	1.0	1	1.0	0.0	0	0	0	
ITEM TOTAL	30	13	15.0	12	17.0	5	8.0	1	2.0	2	3.0	1	2.0	4	5.0	2	3.0	4.0	1	1	6	

* - Subsidiary to Item 585.1

LIGHTING ITEMS - NON-PARTICIPATING

ITEM NO.	ITEM	UNIT	TOTAL
TOWN OF HARTFORD			
614.522	MOLDED PULL BOX 13" x 24"	EA	4
614.72118	2" PVC CONDUIT SCHEDULE 80	LF	12
614.73118	3" PVC CONDUIT SCHEDULE 80	LF	185
625.4231	#10 WIRE	LF	120
625.42306	#6 WIRE	LF	645
625.42302	#2 WIRE	LF	100
625.55	ORNAMENTAL LIGHT POLE, 12'-6" HIGH	EA	2
626.2	LIGHTING SYSTEM METER PEDESTAL	EA	1
CITY OF LEBANON			
564.102	BRIDGE LIGHTING SYSTEM	EA	1
614.522	MOLDED PULL BOX 13" x 24"	EA	1
614.73118	3" PVC CONDUIT SCHEDULE 80	LF	252
625.4231	#10 WIRE	LF	360
625.42306	#6 WIRE	LF	3135
625.42302	#2 WIRE	LF	100
625.55	ORNAMENTAL LIGHT POLE, 12'-6" HIGH	EA	6
626.2	LIGHTING SYSTEM METER PEDESTAL	EA	1

FIRE ALARM ITEMS - NON-PARTICIPATING

ITEM NO.	ITEM	UNIT	TOTAL
CITY OF LEBANON			
564.51	BRIDGE LIGHTING SYSTEM	EA	1
614.522	MOLDED PULL BOX 13" x 24"	EA	4
614.73118	3" PVC CONDUIT SCHEDULE 80	LF	164

REVISIONS AFTER PROPOSAL

NUMBER	DATE	STATION	DESCRIPTION

SDR PROCESSED ARM DATE 08/11
NEW DESIGN DEM DATE 05/13
SHEET CHECKED TAT DATE 05/13
AS BUILT DETAILS DATE

FAY SPOFFORD AND THORNDIKE, LLC

STATE OF NEW HAMPSHIRE
DEPARTMENT OF TRANSPORTATION • BUREAU OF BRIDGE DESIGN

SUMMARY OF QUANTITIES

DGN	STATE PROJECT NO.	SHEET NO.	TOTAL SHEETS
	14957	9	157

CURBING

ITEM NO.			202.6	609.01	609.02
DESCRIPTION	MARK NUMBER	RADIUS	CURB REMOVAL FOR STORAGE	STRAIGHT GRANITE CURB	CURVED GRANITE CURB
UNIT		LF	LF	LF	LF
PARTICIPATING					
LOCATION					
US 4					
STA 332+38, LT. 11.00' - STA 332+83, LT. 12.60'			135.4		
STA 334+30, RT. 6.89' - STA 335+50, RT. 18.19'			120.1		
STA 335+07, RT. 42.82' - STA 335+51, RT. 42.00'			44.7		
STA 339+41, RT. 15.74' - STA 340+84, RT. 16.39'			143.7		
STA 340+52, LT. 17.36' - STA 341+00, LT. 26.32'			66.0		
STA 341+44, LT. 17.12' - STA 341+80, LT. 19.89'			81.2		
STA 342+18, LT. 23.30' - STA 342+42, LT. 29.85'			51.3		
STA 332+50.0, LT. 10.8' - STA 333+39.6, LT. 22.0'	G-1			89.4	
STA 333+39.6, LT. 22.0' - STA 333+64.4, LT. 22.0'	G-2			24.1	
STA 333+64.4, LT. 22.0' - STA 333+90.0, LT. 31.6'	G-3	35		27.1	
STA 333+, RT. ' - STA 333+36.4, RT. 22.0'	G-4				
STA 333+36.4, RT. 22.0' - STA 333+79.7, RT. 22.0'	G-5			44.6	
STA 333+79.7, RT. 22.0' - STA 333+84.6, RT. 26.9'	G-6	5			7.8
STA 333+84.6, RT. 26.9' - STA 333+84.6, RT. 29.9'	G-7			3.0	
STA 334+20.3, RT. 30.0' - STA 334+20.3, RT. 27.0'	G-8			3.0	
STA 334+20.3, RT. 27.0' - STA 334+24.9, RT. 22.0'	G-9	5			7.5
STA 334+24.9, RT. 22.0' - STA 334+99.9, RT. 17.0'	G-10			75.2	
STA 334+99.9, RT. 17.0' - STA 335+26.5, RT. 17.0'	G-11			26.5	
STA 334+40.4, LT. 33.6' - STA 334+63.7, LT. 20.5'	G-12	35		27.4	
STA 334+63.7, LT. 20.5' - STA 334+91.5, LT. 17.0'	G-13			28.0	
STA 334+91.5, LT. 17.0' - STA 335+20.7, LT. 17.0'	G-14			29.2	
STA 339+69.5, LT. 17.0' - STA 339+78.0, LT. 17.0'	G-15			8.5	
STA 339+78.0, LT. 17.0' - STA 339+86.9, LT. 22.5'	G-16	10			11.0
STA 340+13.1, LT. 22.5' - STA 340+22.0, LT. 17.0'	G-17	10			11.0
STA 340+22.0, LT. 17.0' - STA 341+01.9, LT. 17.0'	G-18			80.4	
STA 341+01.9, LT. 17.0' - STA 341+06.8, LT. 21.8'	G-19	5			7.7
STA 341+06.8, LT. 21.8' - STA 341+06.9, LT. 24.8'	G-20			3.0	
STA 341+44.9, LT. 22.5' - STA 341+49.7, LT. 17.0'	G-21	5			8.3
STA 341+49.7, LT. 17.0' - STA 341+74.8, LT. 17.0'	G-22			25.6	
STA 341+44.9, LT. 22.5' - STA 341+79.7, LT. 22.5'	G-23			35.7	
STA 341+74.8, LT. 17.0' - STA 341+79.7, LT. 22.5'	G-24	5			8.4
STA 342+17.6, LT. 23.3' - STA 342+22.3, LT. 17.0'	G-25	5			9.2
STA 342+22.3, LT. 17.0' - STA 343+06.8, LT. 17.0'	G-26			86.1	
STA 343+06.8, LT. 17.0' - STA 400+38.8, LT. 14.7'	G-27	15			26.1
STA 339+75.5, RT. 17.0' - STA 341+02.1, LT. 17.0'	G-29			126.1	
STA 341+02.1, RT. 17.0' - STA 74+70.4, LT. 12.0'	G-30	35		56.9	
STA 341+82.3, RT. 22.5' - STA 342+01.9, RT. 17.0'	G-32	35		20.3	
STA 342+01.9, RT. 17.0' - STA 342+50.0, RT. 17.0'	G-33			47.2	
STA 342+50.0, RT. 17.0' - STA 342+66.7, RT. 16.8'	G-34			16.4	
STA 342+66.7, RT. 16.8' - STA 343+33.7, RT. 15.9'	G-35			65.8	
STA 343+33.7, RT. 15.9' - STA 343+37.7, RT. 17.8'	G-36	5			4.6
STA 343+37.7, RT. 17.8' - STA 343+39.9, RT. 21.3'	G-37	15			4.1
STA 343+69.5, RT. 23.6' - STA 343+78.7, RT. 18.2'	G-38	5			11.0
STA 343+78.7, RT. 18.2' - STA 344+00.1, RT. 18.0'	G-39			20.9	
CRAFTS AVENUE					
STA 400+38.8, LT. 14.7' - STA 400+60.3, LT 14.1'	G-28			21.6	
STA 400+28, LT. 15.00' - STA 400+60, LT. 14.06'			32.1		
TRANSFER STATION DRIVEWAY					
STA 72+47.7, LT. 12.0' - STA 74+70.4, LT. 12.0'	G-31			225.2	
	SUB-TOTAL		**674.5**	**1311.0**	**96.0**
	ROUNDING		**5.5**	**9.0**	**4.0**
PARTICIPATING TOTAL:			**680.0**	**1320.0**	**100.0**
NON-PARTICIPATING					
US 4 - City Side			**203.0**	**464.0**	**37.0**
	SUB-TOTAL		**203.0**	**464.0**	**37.0**
	ROUNDING		**2.0**	**6.0**	**3.0**
NON-PARTICIPATING TOTAL:			**205.0**	**470.0**	**40.0**
PROJECT TOTAL:			**885.0**	**1790.0**	**140.0**

GUARDRAIL AND CONCRETE BARRIER

NOTE NO.	ITEM NO. / ITEM	202.7 REMOVAL OF GUARDRAIL	203.5555 GUARDRAIL 25 FT. EAGRT PLATFORM	606.1209 BEAM GUARDRAIL (STANDARD SECTION - STEEL POSTS)(POWDER COATED) GR-140	606.12559 BEAM GUARDRAIL (TERM. UNIT TYPE EAGRT 25 FT.)(POWDER COATED)	621.2 RETROREFLECTIVE BEAM GUARDRAIL DELINEATOR (WHITE)	621.31 SINGLE DELINEATOR WITH POST	REMARKS
	UNIT	LF	UNIT	LF	UNIT	EA	EA	
	LOCATION							
	PARTICIPATING							
1	STA 334+56, RT - STA 334+71, RT			15		1	1	
	STA 334+21, RT - STA 334+56, RT		1		1		1	
6	STA 334+80, RT. 15.41' - STA 335+49, RT. 17.62'	69.4						
2	STA 335+03, RT. 43.86' - STA 335+51, RT. 42.65'	48.4						
10	STA 334+93, RT. 65.14' - STA 335+52, RT. 49.48'	71.3						
3	STA 340+43, RT. - STA 340+68, RT.		1		1		1	
12	STA 339+41, RT. 23.71' - STA 340+73, RT. 22.14'	132.3						
9	STA 339+88, LT. 27.40' - STA 340+47, LT. 19.34'	70.7						
11	STA 339+39, LT. 8.89' - STA 339+60, LT. 22.57'	27.7						
13	STA 74+70, LT. 30.28' - STA 73+99, LT. 14.46'	77.0						
4	STA 334+21, RT. 8.76' - STA 335+33, RT. 71.00'	156.6						
5	STA 334+75, RT. 115.77' - STA 335+34, RT. 95.16'	68.0						
8	STA 339+84, RT. 41.35' - STA 341+70, LT. 9.50'	193.2						
7	STA 339+85, RT. 65.01' - STA 341+05, RT. 48.77'	119.8						
	BEAM GUARDRAIL FOR FUTURE REPLACEMENT *			15				
	SUBTOTAL	**1034**	**2**	**30**	**2**	**1**	**3**	
	ROUNDING	**6**	**0**	**0**	**0**	**0**	**0**	
	TOTAL	**1040**	**2**	**30**	**2**	**1**	**3**	

* - Contractor to supply equivalent length of guardrail to municipality as installed. This will allow for future replacement of powder coated rail.

SURFACING MATERIALS

ITEM NO.	304.1	304.4	304.5	403.11	403.11002	403.12	403.6	403.99	417	628.2
ITEM	SAND (F)	CRUSHED STONE (FINE GRADATION) (F)	CRUSHED STONE (COURSE GRADATION) (F)	HOT BITUMINOUS PAVEMENT, MACH. METH.	HOT BITUMINOUS PAVEMENT, MACH. METH. (QC/QA TIER 2)	HOT BIT. PAVEMENT, HAND METHOD	PAVEMENT JOINT ADHESIVE	TEMPORARY BITUMINOUS PAVEMENT	COLD PLANING BITUMINOUS SURFACES	SAWED BITUMINOUS PAVEMENT
UNIT	CY	CY	CY	TON	TON	TON	LF	TON	SY	LF
LOCATION										
PARTICIPATING										
US 4	1009	682	673		913.6	27.4	7755	135	69	495
COMMERCIAL DRIVE	22	11			15.5		50		62	
CRAFTS AVE.	57	29			38.1	0.6	100		84	
TRANSFER STATION DRIVE	410	219	286		390.9	6.4	910		76	
PROSPECT STREET	124	62			81.5		220		60	
STATELINE SPORTS DRIVEWAY	142	71			90.4					
LISTEN INC. DRIVEWAY	26	13			18.1					
WAQ DRIVEWAY	0	9								
PORTLAND GLASS DRIVEWAY	0	55			69.7					
SIDE ROADS										200
BRIDGE OVERLAY					142.6		4989			
BIKE PATH		107	119	35.6						
SUBTOTAL	1791	1258	1078	35.6	1760.4	34.4	14024	135	352	695
ROUNDING	0	0	0	4.4	9.4	5.6	76	5	8	5
PARTICIPATING TOTAL	1791	1258	1078	40	1770	40	14100	140	360	700
NON-PARTICIPATING										
US 4 - City Side	598	400	400	0.0	566.4	13.1	3735	69	111	205
DRIVE APRONS		124				63.2				250
SUBTOTAL	598	525	400	0.0	566	76	3735	69	111	455
ROUNDING	0	0	0	0.0	4.0	4.0	15	1	9	5
NON-PARTICIPATING TOTAL	598	525	400	0	570	80	3750	70	120	460
PROJECT TOTAL	2389	1783	1478	40	2340	120	17850	210	480	1160

FORCE ACCOUNT WORK BY UTILITIES

(NOT PART OF THIS CONTRACT)
LIBERTY UTILITIES
FIRE DEPARTMENT (PRE-EMPT CABLE)
FAIRPOINT COMMUNICATIONS (PHONE)

TEMPORARY EROSION CONTROL

ITEM NO.	645.3	645.42	645.44	645.512	645.531
ITEM	EROSION STONE	TEMPORARY SLOPE STABILIZATION, TYPE B (WILDLIFE FRIENDLY)	TEMPORARY SLOPE STABILIZATION, TYPE D (WILDLIFE FRIENDLY)	COMPOST SOCK FOR PERIMETER BERM	SILT FENCE
UNIT	TON	SY	SY	EA	LF
LOCATION - PARTICIPATING					
VERMONT					
ALONG CT. RIVER				337	337.1
ALONG TOE OF SLOPE					431.4
NEW HAMPSHIRE					
ALONG CT. RIVER				1228	1227.7
ALONG TOE OF SLOPE					472.6
POND				481	481
SLOPES		5172	278		
ALONG US4	263				
SUBTOTAL	263	5,172	278	2,046	2,950
ROUNDING	7	28	2	4	0
PARTICIPATING TOTAL	270	5,200	280	2,050	2,950
LOCATION - NON-PARTICIPATING					
LEBANON		63	48		
SUBTOTAL	0	63	48	0	0
ROUNDING	0	2	2	0	0
NON-PARTCIPATING TOTAL	0	65	50	0	0
PROJECT TOTAL	270	5,265	330	2,050	2,950

INCIDENTAL ITEMS - PARTICIPATING

ITEM NO.	ITEM	UNIT	TOTAL PAR	TOTAL NON-PAR
203.37	HANDLING AND SEGREGATING NON-CONTAMINATED SOILS	CY	830	0
206.19	COMMON STRUCTURE EXCAVATION, EXPLORATORY	CY	30	0
211.11	VIBRATION MONITORING SERVICES	HR	130	60
214.	FINE GRADING	U	0.7	0.3
606.63119	SAFETY RAIL, W/GUARD,STEEL (ANODIZED)	LF	100	0
611.90001	ADJUSTING WATER GATES AND SHUTOFFS SET BY OTHERS	EA	19	3
618.6	UNIFORMED OFFICERS	HR	240	60
618.61	UNIFORMED OFFICERS W/ VEHICLE	HR	120	0
618.7	FLAGGERS	HR	4800	780
619.1	MAINTENANCE OF TRAFFIC	U	1	0
619.25	PORTABLE CHANGEABLE MESSAGE SIGN	U	2	0
645.7	STORMWATER POLLUTION PREVENTION PLAN	U	1	0
645.71	MONITORING SWPPP & EROSION AND SEDIMENT CONTROL	HR	470	0
670.0459	REMOVE TEMPORARY DIVERSION	U	1	0
692.	MOBILIZATION	U	1	0
693.	ON THE JOB TRAINING OF UNSKILLED WORKERS	$	*	*
698.12	FIELD OFFICE TYPE B	MO	36	0
698.2	PHYSICAL TESTING LABORATORY	MO	33	0
699.	MISCELLANEOUS TEMPORARY EROSION AND SEDIMENT CONTROL	$	*	*
1009.2	TREATMENT OR DISPOSAL OF CONTAMINATED SOIL GROUNDWATER	$	*	*
1009.21	TREATMENT OR DISPOSAL OF CONTAMINATED GROUNDWATER (FRAC TANK)	$	*	*
1010.15	FUEL ADJUSTMENT	$	*	*
1010.2	ASPHALT CEMENT ADJUSTMENT	$	*	*
1010.3	QUALITY CONTROL QUALITY ASSURANCE (QC/QA) FOR ASPHALT	$	*	*

* - NOT A BID ITEM

FAY SPOFFORD AND THORNDIKE, LLC

STATE OF NEW HAMPSHIRE

DEPARTMENT OF TRANSPORTATION • BUREAU OF BRIDGE DESIGN

SUMMARY OF QUANTITIES

DGN	STATE PROJECT NO.	SHEET NO.	TOTAL SHEETS
sumsht	14957	10	157

REVISIONS AFTER PROPOSAL

NUMBER	DATE	STATION	DESCRIPTION

SDR PROCESSED ARM DATE 08/11

NEW DESIGN DEM DATE 05/13

SHEET CHECKED TAT DATE 05/13

AS BUILT DETAILS DATE

LANDSCAPING AND SLOPE PROTECTION

ITEM NO.	641.	643.21	644.15	644.44	644.62	646.31	647.1
ITEM	LOAM	FERTILIZER FOR REFERTILIZATION	PARK SEED TYPE 15 (SUBSIDIARY TO ITEM 646.3)*	PARK SEED TYPE 44 (SUBSIDIARY TO ITEM 646.3)*	WET BASIN/MEADOW SEED TYPE 62	TURF ESTABLISHMENT WITH MULCH & TACKIFIERS	HUMUS
UNIT	CY	LB	LB	LB	LB	SY	CY
LOCATION - PARTICIPATING							
VERMONT							
2:1 SLOPES	0.0						8
4:1 SLOPES	78.9						
6:1 SLOPES	9.0						
NEW HAMSHIRE							
2:1 SLOPES	0.0						23
3:1 SLOPES	0.0						92
4:1 SLOPES	403.1						
6:1 SLOPES	70.8						
		1632.0	123	28	21	6169.0	20
SUBTOTAL	562	1632	123	28	21	6169	143
ROUNDING	3	18	*	*	1	31	7
PARTICIPATING TOTAL	565	1650	*	*	22	6200	150
LOCATION - NON-PARTICIPATING							
LEBANON							
SLOPES	50.0	22.0	3			120.5	
SUBTOTAL	50.0	22.0	3.0	0.0	0	120.5	0.0
ROUNDING	0.0	3.0	*	*	0	9.5	0.0
NON-PARTICIPATING TOTAL	50.0	25.0	*	*	0.0	130.0	0.0
PROJECT TOTAL	615.0	1675.0	*	*	22.0	6330.0	150.0

* - NOT AN ITEM TOTAL

FENCING

	ITEM NO.	202.8	607.350	607.360	607.4350	607.4360	607.73510
	ITEM	REMOVAL OF FENCE	CHAIN LINK FENCE WITH VINYL COATED STEEL FABRIC, 5' HIGH	CHAIN LINK FENCE WITH VINYL COATED STEEL FABRIC, 6' HIGH	POST ASSEMBLIES FOR CHAIN LINK FENCE, 5' HIGH	POST ASSEMBLIES FOR CHAIN LINK FENCE, 6' HIGH	10' OPENING DOUBLE GATE, CHAIN LINK VINYL COATED STEEL FABRIC, 5' HIGH
NOTE	UNIT	LF	LF	LF	EA	EA	U
LOCATION	LOCATION						
	PARTICIPATING						
A	VT Side - Top of Retaining Wall	88		85.0		2	
	VT Side - Behind Sidewalk, RT	156					
B	Around Stormwater Pond		481.0		10		1
	SUBTOTAL	244	481.0	85.0	10	2	1
	ROUNDING	6	9.0	5.0	0	0	0
	TOTAL	250	490.0	90.0	10	2	1

PERMANENT CONSTRUCTION SIGNS AND WARNING DEVICES

(INCLUDED IN ITEM NO. 619.1)

SIGN NO.	DESCRIPTION	SIZE (ft)	S.F.	NO. REQ.	TOTAL AREA	POSTS	PORTABLE SIGN SUPPORTS	REMARKS
G20-2a	END ROAD WORK	2X4	8	4	32	8		
R50-1	NH LAW WORK ZONE	4X6	24	4	96	8		
W20-1a	ROAD WORK AHEAD	4X4	16	4	64	8		
W20-1b	ROAD WORK 500 FT	4X4	16	4	64	8		
W20-4a	ONE LANE ROAD AHEAD	4X4	16	2	32		2	
W20-7a	FLAGGER SYMBOL	4X4	16	2	32		2	

The estimated quantities of "Permanent Controls" are hereby listed. The Contractor is responsible for all "Operational Controls" required under section 619 of the NHDOT Specifications and the Manual on Uniform Traffic Control Devices (MUTCD), Part VI. All post mounted warning signs placed in Vermont shall require type VIII or better fluorescent orange sheeting and all regulatory signs shall be type III sheeting or better.

EARTHWORK

		PARTICIPATING CY	PARTICIPATING TOTAL	NON-PAR CY	NON-PAR TOTAL
Common Excavation in Sections, Including Boulders and Pavement		3,940		1684	
Common Excavation Not In Sections (Bituminous Pavement)		0		0	
Drive and Approach Excavation, Including Boulders		0		0	
Common Excavation in Sections, Excl. Bldrs. & Conc. Pvmt.		3,940		1684	
Topsoil Removed Beneath Fill Sections		536		0	
Bituminous Pavement Removed Beneath Fill Sections		200		0	
COMMON EXCAVATION	ITEM 203.1	4,676	4,700	1,684	1,700
Rock Structure Excavation		179		0	
ROCK STRUCTURE EXCAVATION FOR ESTIMATE	ITEM 206.2	179	180	0	0
Sections Fill		1,630		8	
Topsoil Replacement		574		0	
Drive and Approach Fill		0		0	
Replace Bituminous Pavement in Sections		200		0	
Unsuitable Urban Fill Replacement		163			
EMBANKMENT-IN-PLACE	ITEM 203.601	2,567	2,600	8	8

CLEARING AND GRUBBING

ITEM NO.		201.1
ITEM		CLEARING AND GRUBBING (F)
UNIT		ACRE
THE AREAS LISTED BELOW ARE SHOWN ON THE PLANS BY LETTER ID's		
LOCATION	DESIGNATED AREAS	
US ROUTE 4		
332+50, RT - 332+72, RT	A	0.001
339+32, LT - 340+11, LT	B	0.205
	H	0.042
TRANSFER STATION DRIVE		
71+10, RT - 74+78, RT	C	0.154
71+00, LT - 71+75, LT	E	0.049
70+90, RT - 71+05 RT	F	0.014
72+75, LT - 73+35, LT	G	0.056
CRAFTS AVE		
400+55, LT - 400+65, LT	D	0.001
SUB-TOTAL		0.5
ROUNDING		0.0
TOTAL		0.5

WATER MAIN

PARTICIPATING

ITEM NO.	ITEM	UNIT	TOTAL
520.2	CONCRETE CLASS B	CY	18
611.05206	6" CEMENT LINED DUCTILE IRON WATER PIPE, CL 52	LF	25
611.05212	12" CEMENT LINED DUCTILE IRON WATER PIPE, CL 52	LF	140
611.06212	12" CEMENT LINED DUCTILE IRON BRIDGE CROSSING PIPE, CL 52	LF	450
611.35220	20" CASING PIPE W/ 12" CEMENT LINED DI MY, CL 52 CARRIER PIPE	LF	60
611.70012	12" FITTING	EA	11
611.71006	6" GATE VALVE	EA	1
611.71012	12" GATE VALVE	EA	3
611.74	CHLORINE INJECTION TAP	LS	1
611.81	HYDRANTS	EA	1
611.811	ADJUSTING/RELOCATING HYDRANTS	EA	3
611.814	REMOVING HYDRANTS	EA	1

NON-PARTICIPATING

ITEM NO.	ITEM	UNIT	TOTAL
520.2	CONCRETE CLASS B	CY	11
611.05206	6" CEMENT LINED DUCTILE IRON WATER PIPE, CL 52	LF	35
611.05212	12" CEMENT LINED DUCTILE IRON WATER PIPE, CL 52	LF	440
611.5012	2" COPPER WATER PIPE	LF	125
611.5102	2" CORPORATION STOPS	EA	5
611.5202	2" CURB STOPS	EA	5
611.70006	6" FITTING	EA	1
611.70012	12" FITTING	EA	9
611.71006	6" GATE VALVE	EA	1
611.71012	12" GATE VALVE	EA	3
611.74	CHLORINE INJECTION TAP	EA	1
611.811	ADJUSTING/RELOCATING HYDRANTS	EA	1
611.952	WATER MAIN INSULATION - HARTFORD, VT	LF	255
611.952	WATER MAIN INSULATION - LEBANON, NH	LF	255

SEWER MAIN

NON-PARTICIPATING

ITEM NO.	ITEM	UNIT	TOTAL
612.199	BYPASS PUMPING	LS	1
612.3104	PRECAST SEWER MANHOLES, 4-FT DIAMETER	VF	28
612.3105	PRECAST SEWER MANHOLES, 5-FT DIAMETER	VF	17
612.3106	PRECAST SEWER MANHOLES, 6-FT DIAMETER	VF	15
612.5101	12" x 6" PVC SERVICE CONNECTION FITTING	EA	5
612.5106	6" SERVICE LATERAL REPLACEMENT	LF	120
612.5112	12" PVC SEWER PIPE	LF	460
612.5118	18" PVC SEWER PIPE	LF	215

SIDEWALK

ITEM NO.	209.1	608.24	608.54
ITEM	GRANULAR BACKFILL	4" CONCRETE SIDEWALK (F)	DETECTABLE WARNING DEVICES, CAST IRON
UNIT	CY	SY	SY
LOCATION - PARTICIPATING			
US 4	124	747	
COMMERCIAL DRIVE			4.4
CRAFTS AVE.	4	26	1.1
TRANSFER STATION DRIVE	42	251	5.6
PROSPECT STREET			8.9
STATELINE SPORTS DRIVEWAY			
LISTEN INC. DRIVEWAY			
WAQ DRIVEWAY			
PORTLAND GLASS DRIVEWAY			
SIDE ROADS			
SUBTOTAL	171	1024	20.0
ROUNDING	4	0	0.0
PARTICIPATING TOTAL	175	1,024	20
LOCATION - NON-PARTICIPATING			
US 4	33	198	0.0
SUBTOTAL	33	198	0
ROUNDING	2	0	0.0
NON-PARTCIPATING TOTAL	35	198	0
PROJECT TOTAL	210	1,222	20

PAVEMENT MARKINGS

ITEM NO.	632.0104	632.3106	632.3118	632.3124	632.32
ITEM	RETROREFLECTIVE PAINT PAVE. MARKING, 4" LINE	RETROREFLECT. THERMOPLAS. PAVE. MARKING, 6" LINE	RETROREFLECT. THERMOPLAS. PAVE. MARKING, 18" LINE	RETROREFLECT. THERMOPLAS. PAVE. MARKING, 24" LINE	RETRO REFL. THERMO PAVEMENT SYMBOL
UNIT	LF	LF	LF	LF	SF
LOCATION					
PARTICIPATING					
US 4 and Side Roads	4457	423	82	114	
SUBTOTAL	4457	423	82	114	0
ROUNDING	43	2	3	1	
PARTICIPATING TOTAL	4500	425	85	115	0
NON-PARTICIPATING					
US 4 - City Side	841		20	126	92
SUBTOTAL	841	0	20	126	92
ROUNDING	9	0	0	4	3
NON-PARTICIPATING TOTAL	850	0	20	130	95
PROJECT TOTAL	5350	425	105	245	95

SUBSIDIARY ITEMS

DESCRIPTION	LOCATION	QUANTITY
SAWCUT (LONGITUDINAL) - SUBSIDIARY TO ITEM 203.1 (COMMON EXCAVATION)		
SALVAGE OF MATERIALS - SEE SALVAGE OF MATERIALS SUMMARY		
CONSTRUCTING WATERTIGHT CONNECTIONS TO EXISTING PIPES AND STRUCTURES - SUBSIDIARY TO THE ITEMS OF THE WORK		
REMOVAL OF TYPE B/C SIGNS UNDER ITEM 615.		33
REMOVAL OF EXISTING PIPES AND STRUCTURES WHERE INDICATED		
NOTE: THIS LIST SHOULD NOT BE CONSIDERED TO BE A LIST OF SUBSIDIARY WORK PRESENT IN THE PROJECT. REFER ALSO TO THE PLANS, PROPOSAL, SPECIAL PROVISIONS, AND TO THE STANDARD SPECIFICATIONS.		

SIGNING

ITEM NO.	ITEM	UNIT	TOTAL PAR.	TOTAL NON-PAR
615.03	TRAFFIC SIGN TYPE C (F)	SF	98	24
615.034	RELOCATE TRAFFIC SIGNS, TYPE C	EA	7	0
615.06	TRAFFIC SIGN TYPE CC (F)	SF	24	4

BOUNDS

ITEM NO.	622.52
ITEM	RESTTING BOUNDS
UNIT	EA
LOCATION-PARTICIPATING	
334+73.20, Lt 65.69	1
SUBTOTAL	1
ROUNDING	0
TOTAL	1

PEDESTRIAN CROSSWALK FLASHER SYSTEM

NON-PARTICIPATING

ITEM NO.	ITEM	UNIT	TOTAL
CITY OF LEBANON			
614.522	MOLDED PULL BOX 13" x 24"	EA	7
614.73118	3" PVC CONDUIT SCHEDULE 80	LF	450
616.2421	12" FLASHING BEACON, SIGN MOUNTED	EA	1

FAY SPOFFORD AND THORNDIKE, LLC

STATE OF NEW HAMPSHIRE

DEPARTMENT OF TRANSPORTATION • BUREAU OF BRIDGE DESIGN

SUMMARY OF QUANTITIES

DGN	STATE PROJECT NO.	SHEET NO.	TOTAL SHEETS
	14957	11	157

REVISIONS AFTER PROPOSAL

NUMBER	DATE	STATION	STATION	DESCRIPTION

SDR PROCESSED ARM DATE 08/11
NEW DESIGN DEM DATE 05/13
SHEET CHECKED TAT DATE 05/13
AS BUILT DETAILS DATE

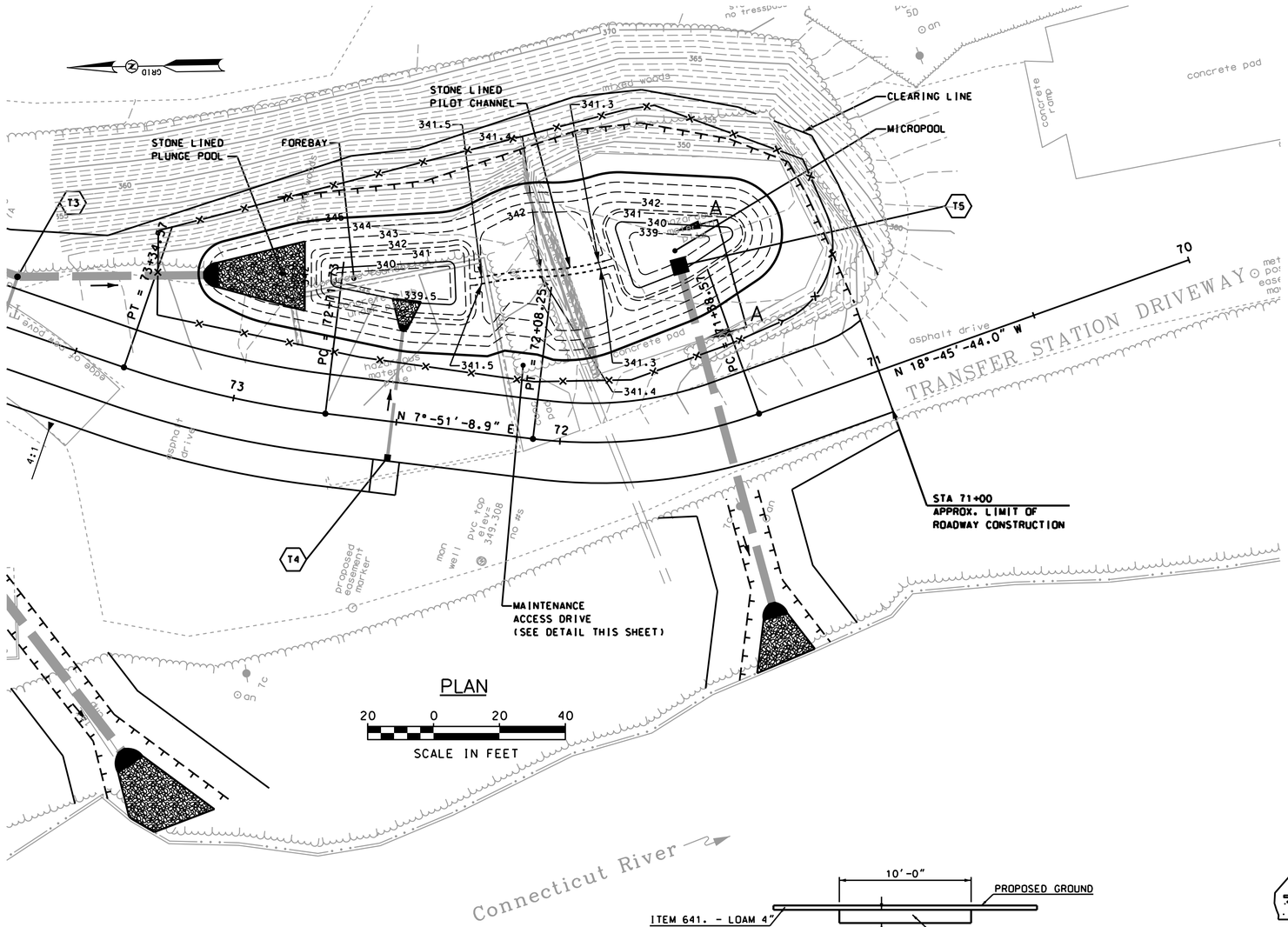

PLAN

20 0 20 40

SCALE IN FEET

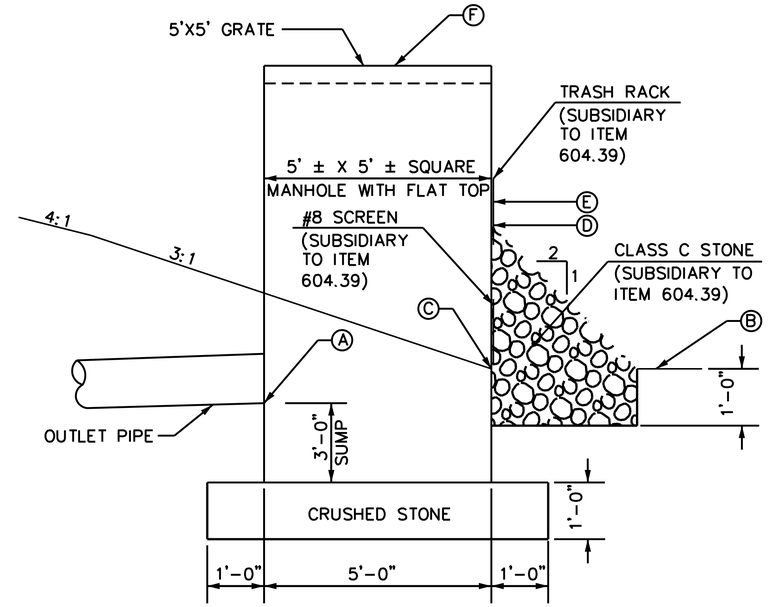

RISER STRUCTURE DETAILS – SECTION A–A

NOT TO SCALE

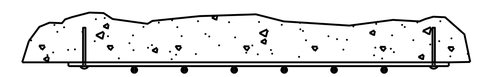

SECTION C–C

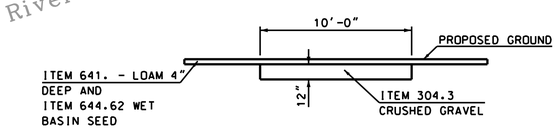

MAINTENANCE ACCESS DRIVE

NOT TO SCALE

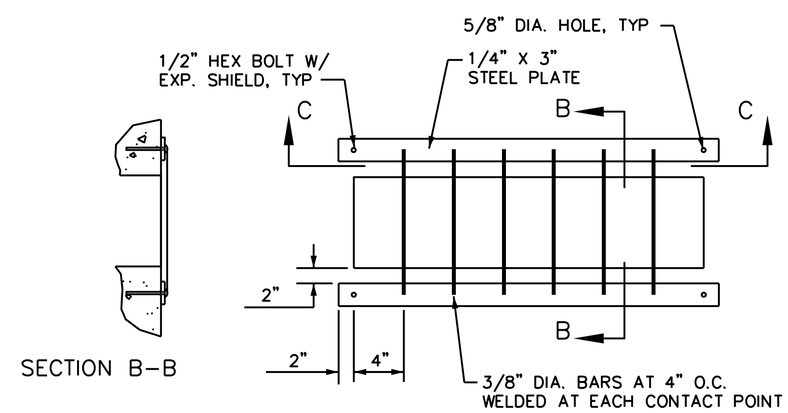

SECTION B–B

TRASH RACK DETAIL

NOT TO SCALE

RISER STRUCTURES										
LOCATION	OUTLET PIPE Ⓐ		BOTTOM OF MICROPOOL Ⓑ	INLET HOLE Ⓒ		INLET HOLE Ⓓ		INLET HOLE Ⓔ		5'X5' GRATE Ⓕ RIM ELEV.
	SIZE	INV		SIZE	INV	SIZE	INV	SIZE	INV	
T5	30"	339.00	339.00	4"	342.00	(2) – 3.0' W X 0.5' H	342.90	3.0' W X 0.5' H	343.30	344.40

*PROVIDE TRASH RACK, SEE DETAIL THIS SHEET

FAY SPOFFORD AND THORNDIKE, LLC

STATE OF NEW HAMPSHIRE

DEPARTMENT OF TRANSPORTATION • BUREAU OF BRIDGE DESIGN

EXTENDED MICROPOOL DETENTION POND GRADING AND DETAILS

DGN	STATE PROJECT NO.	SHEET NO.	TOTAL SHEETS
Pond Grading	14957	12	157

REVISIONS AFTER PROPOSAL

NUMBER	DATE	STATION	STATION	DESCRIPTION

SDR PROCESSED ARM DATE 08/11

NEW DESIGN DEM DATE 05/13

SHEET CHECKED TAT DATE 05/13

AS BUILT DETAILS DATE

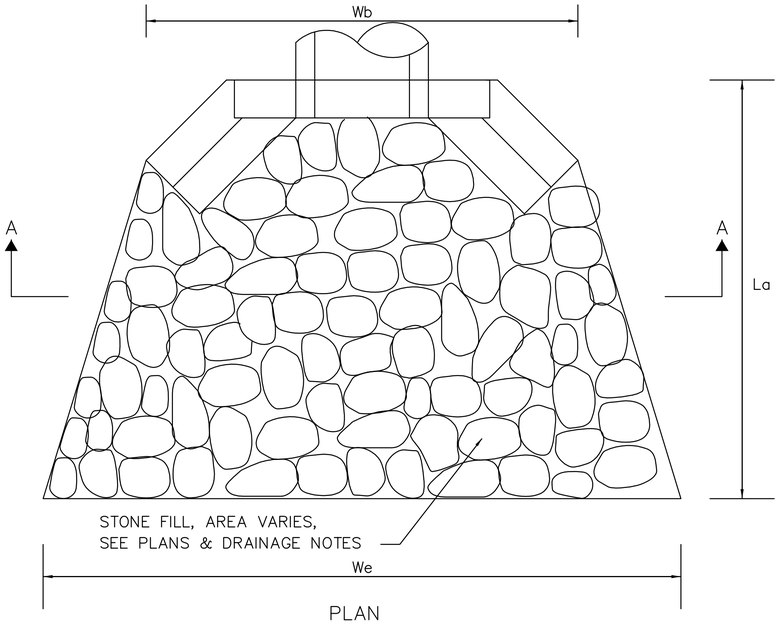

PLAN

OUTLET PROTECTION SUMMARY TABLE								
DRAIN NOTE NUMBER	Q (cfs)	La (ft)	Wb (ft)	We (ft)	Wc (ft)	Ws (ft)	STONE CLASS	THICKNESS (ft)
B10*	11.37	–	–	–	–	–	–	–
B20	2.69	43.3	3.8	13.5	–	–	C	1
T3	15.66	24.6	7.5	27.1	–	–	B	1
T4	0.37	7.7	3.0	8.7	–	–	C	1
T5	22.61	27.8	7.5	30.3	–	–	B	2

* NO ADDITIONAL STONE IS REQUIRED, OUTLETTING ONTO PROPOSED RIPRAP.

** SEE EXTENDED MICROPOOL DETENTION POND GRADING AND DETAILS SHEET FOR LENGTH AND SHAPE OF STONE OUTLET PROTECTION.

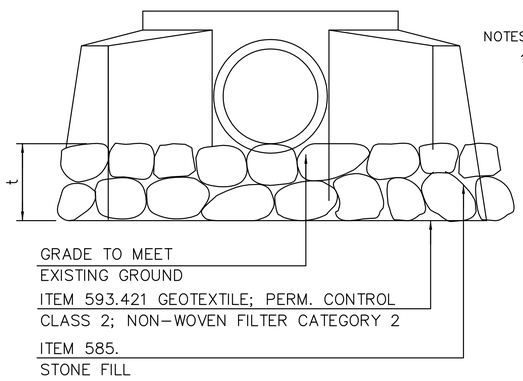

SECTION A–A

NOTES:

1. THICKNESS (t) SHALL BE 2 ft FOR CLASS B (ITEM 585.2) STONE FILL, AND 1 ft FOR CLASS C (ITEM 585.3) STONE FILL AND CLASS D (ITEM 585.4) STONE FILL.

STONE FILL AT OUTLETS

NOT TO SCALE

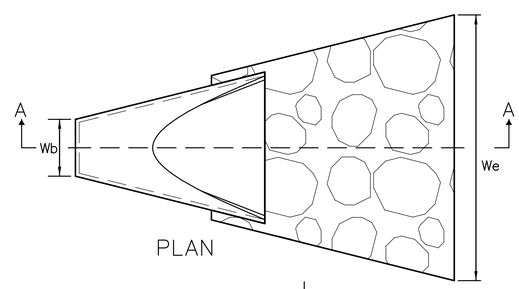

PLAN

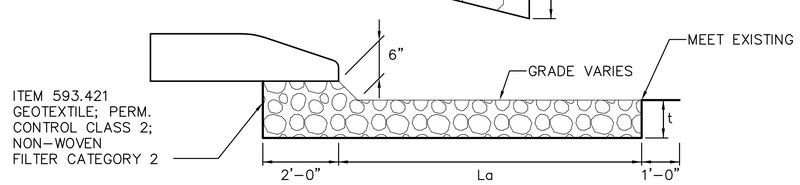

SECTION A–A

PIPE OUTLET TO FLAT AREA WITH NO CHANNEL

SCALE: N.T.S.

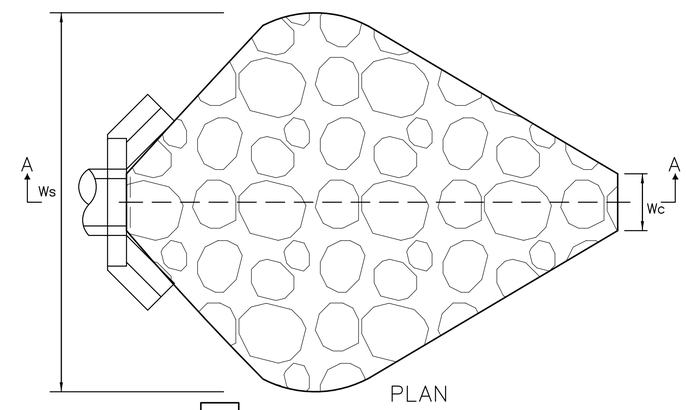

PLAN

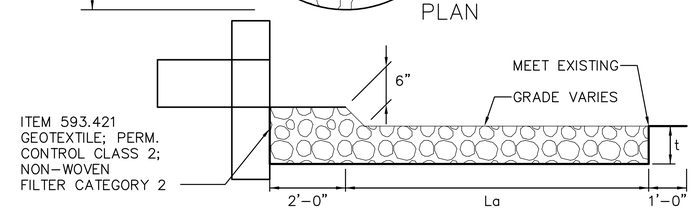

SECTION A–A

PIPE OUTLET TO WELL - DEFINED CHANNEL

SCALE: N.T.S.

NOT TO SCALE
(Except as noted)

FAY, SPOFFORD & THORNDIKE, LLC

STATE OF NEW HAMPSHIRE

DEPARTMENT OF TRANSPORTATION • BUREAU OF HIGHWAY DESIGN

MISCELLANEOUS DETAILS

DGN	STATE PROJECT NO.	SHEET NO.	TOTAL SHEETS
	14957	13	157

REVISIONS AFTER PROPOSAL

NUMBER	DATE	STATION	STATION	DESCRIPTION

NOTEBOOKS

BOOK	PAGE
BOOK	PAGE
BOOK	PAGE

		DATE
EXISTING DETAIL	ARM	08/11
PROPOSED DESIGN	DEM	05/13
SHEET CHECKED	TAT	05/13
AS BUILT DETAILS		

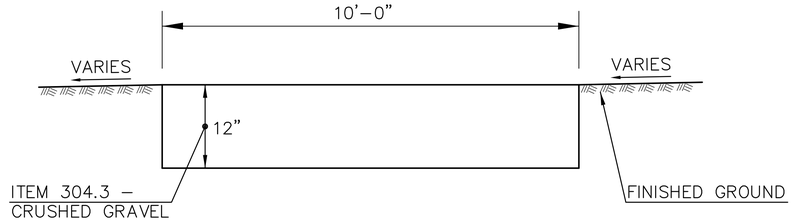

WATER QUALITY UNIT MAINTENANCE ACCESS DRIVE DETAIL

SCALE: NTS

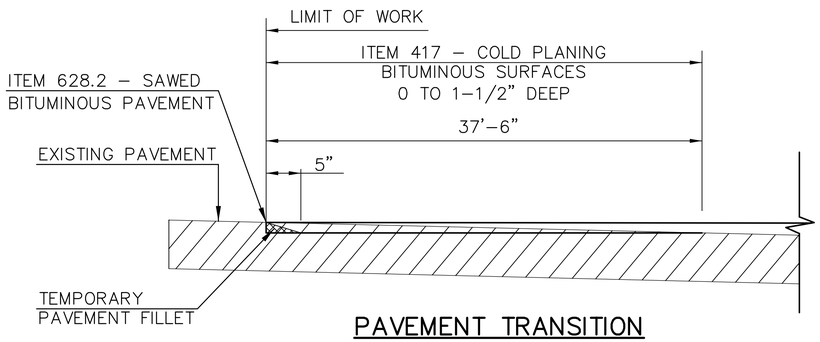

PAVEMENT TRANSITION
SIDE ROADS AND NOTED DRIVEWAYS

PROSPECT STREET, TRANSFER STATION DRIVE, CRAFTS AVE., COMMERCIAL DRIVE

SCALE: NTS

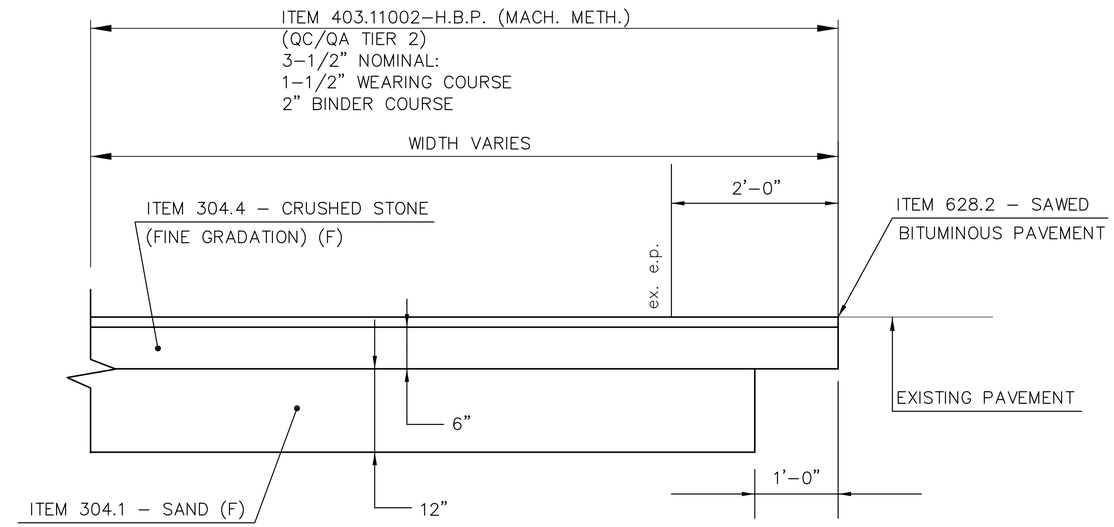

LISTEN INC. COMMERCIAL PARKING LOT

SCALE: NTS

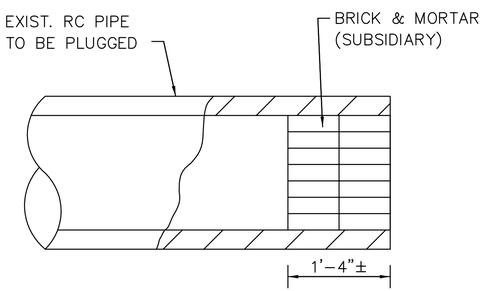

PIPE PLUG DETAIL

NOT TO SCALE

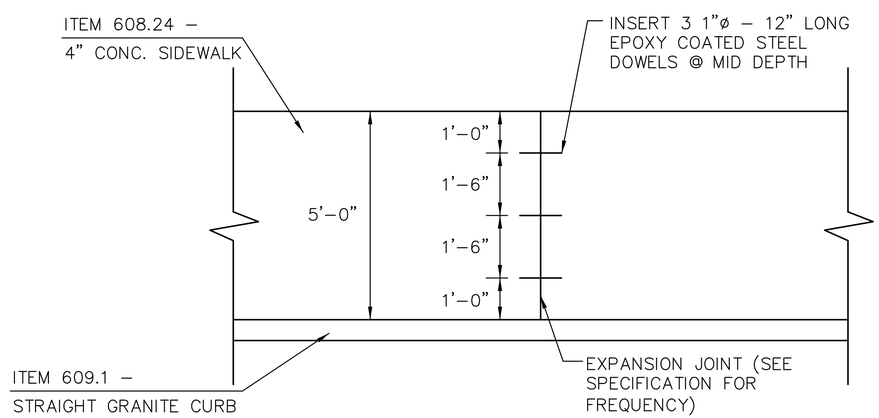

SIDEWALK JOINT DETAIL

SCALE: NTS

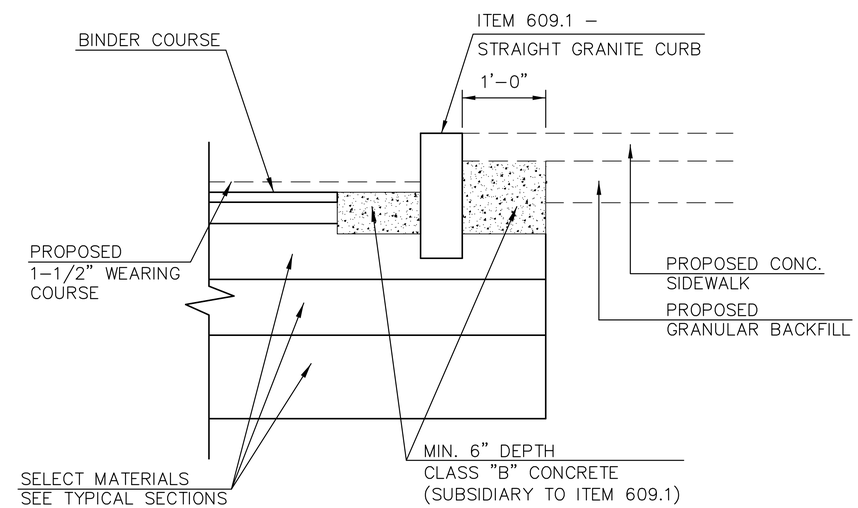

CURBING SUPPORT DETAIL

SCALE: NTS

NOT TO SCALE
(Except as noted)

FAY, SPOFFORD & THORNDIKE, LLC

STATE OF NEW HAMPSHIRE

DEPARTMENT OF TRANSPORTATION • BUREAU OF HIGHWAY DESIGN

MISCELLANEOUS DETAILS

DGN	STATE PROJECT NO.	SHEET NO.	TOTAL SHEETS
	14957	14	157

REVISIONS AFTER PROPOSAL

NUMBER	DATE	STATION	STATION	DESCRIPTION

NOTEBOOKS

BOOK	PAGE
BOOK	PAGE
BOOK	PAGE

EXISTING DETAIL	ARM	DATE 08/11
PROPOSED DESIGN	DEM	DATE 05/13
SHEET CHECKED	TAT	DATE 05/13
AS BUILT DETAILS		DATE

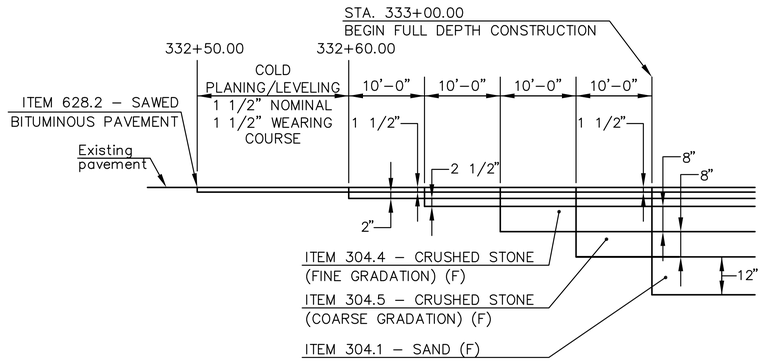

US 4 CONSTRUCTION APPROACH

STA. 332+50.00 TO STA. 333+00.00
N.T.S

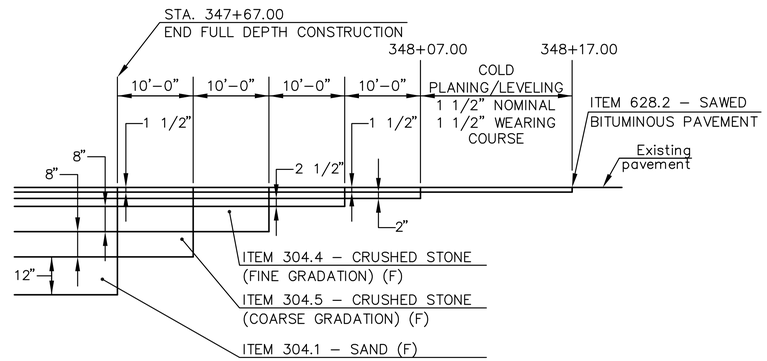

US 4 CONSTRUCTION APPROACH

STA. 347+67.00 TO STA. 348+17.00
N.T.S

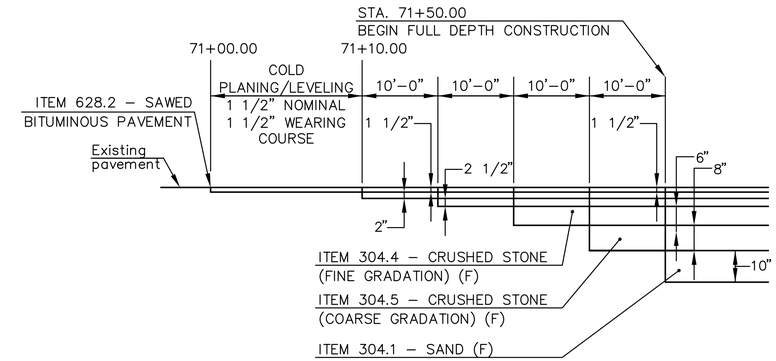

TRANSFER STATION DRIVEWAY CONSTRUCTION APPROACH

STA. 71+00.00 TO STA. 71+50.00
N.T.S

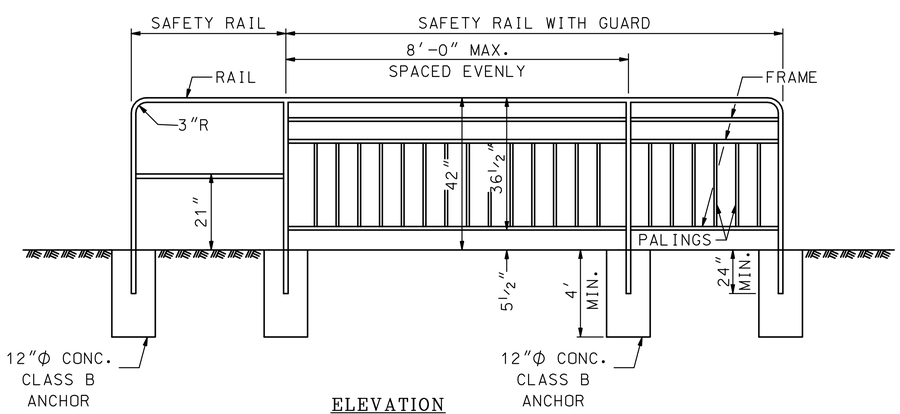

ELEVATION

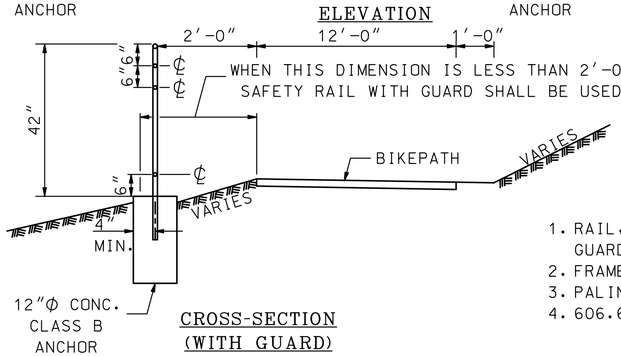

CROSS-SECTION
(WITH GUARD)

SAFETY RAIL & SAFETY RAIL WITH GUARD

SCALE: NTS

GENERAL NOTES

1. RAIL, POSTS, AND HORIZONTAL MEMBER OF SAFETY RAIL WITHOUT GUARD SHALL BE 1¼" NOMINAL.
2. FRAME SHALL BE 1" NOMINAL.
3. PALINGS SHALL BE ¾" NOMINAL SPACED 6" ON CENTER.
4. 606.6311 – SAFETY RAIL W/ GUARD, (STEEL) (ANODIZED).

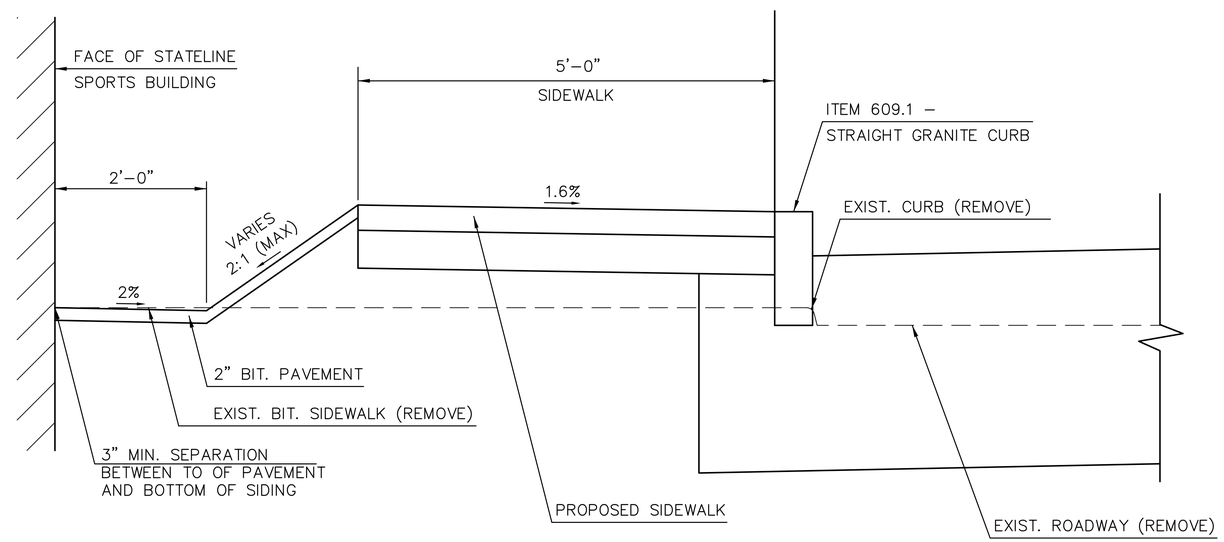

SWALE DETAIL BETWEEN SIDEWALK AND STATELINE SPORTS BUILDING

SCALE: NTS

NOT TO SCALE
(Except as noted)

FAY, SPOFFORD & THORNDIKE, LLC

STATE OF NEW HAMPSHIRE

DEPARTMENT OF TRANSPORTATION • BUREAU OF HIGHWAY DESIGN

MISCELLANEOUS DETAILS

DGN	STATE PROJECT NO.	SHEET NO.	TOTAL SHEETS
	14957	15	157

REVISIONS AFTER PROPOSAL

NUMBER	DATE	STATION	STATION	DESCRIPTION

NOTEBOOKS

BOOK	PAGE	
BOOK	PAGE	
BOOK	PAGE	

EXISTING DETAIL	ARM	DATE 08/11
PROPOSED DESIGN	DEM	DATE 05/13
SHEET CHECKED	TAT	DATE 05/13
AS BUILT DETAILS		DATE

ELECTRICAL LEGEND

- BRIDGE LIGHTING POLE, FOUNDATION, AND LUMINAIRE
- PB / JB — NEW HANDHOLE (24"x13"x36")
- LIGHTING LOAD CENTER
- PROPOSED DIRECT BURIED LIGHTING RACEWAYS AND WIRING
- (A) ELECTRICAL KEYNOTE

LUMINAIRE INFORMATION BOX

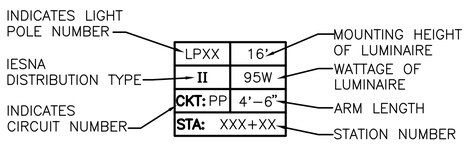

ABBREVIATIONS

A	AMPERE
(ABAN)	ABANDON
AFG	ABOVE FINISHED GRADE
AWG	AMERICAN WIRE GAUGE
C	CONDUIT
CKT	CIRCUIT
CM	CIRCULAR MIL
CUT	CUTOFF DISTRIBUTION
DIA	DIAMETER
ELEC.	ELECTRIC
EMH	ELECTRIC MANHOLE
FC	FOOT CANDLES
FT	FOOT
G	GROUND
GFCI	GROUND FAULT CIRCUIT INTERRUPTER
IT	INFORMATION TECHNOLOGY
K	KELVIN
KVA	KILO VOLT AMPERES
LC	LIGHTING CIRCUIT
LLC	LIGHTING LOAD CENTER
LP	LIGHT POLE
LTG	LIGHTING
MIN.	MINIMUM
O	ORANGE
OD	OUTER DIAMETER
O.C.	ON CENTER
P	POLE
PSNH	PUBLIC SERVICE OF NEW HAMPSHIRE
PVC	POLYVINYL CHLORIDE
R&D	REMOVE AND DISPOSE
R&R	REMOVE AND RESET
RCPT	RECEPTACLE
RGS	RIGID GALVANIZED STEEL
RM	RIGID METAL
SCH	SCHEDULE
SPST	SINGLE POLE DOUBLE THROW
TYP.	TYPICAL
UL	UNDERWRITERS LABORATORIES
V	VOLT
W	WATT / WHITE
W/	WITH
WP	WEATHERPROOF

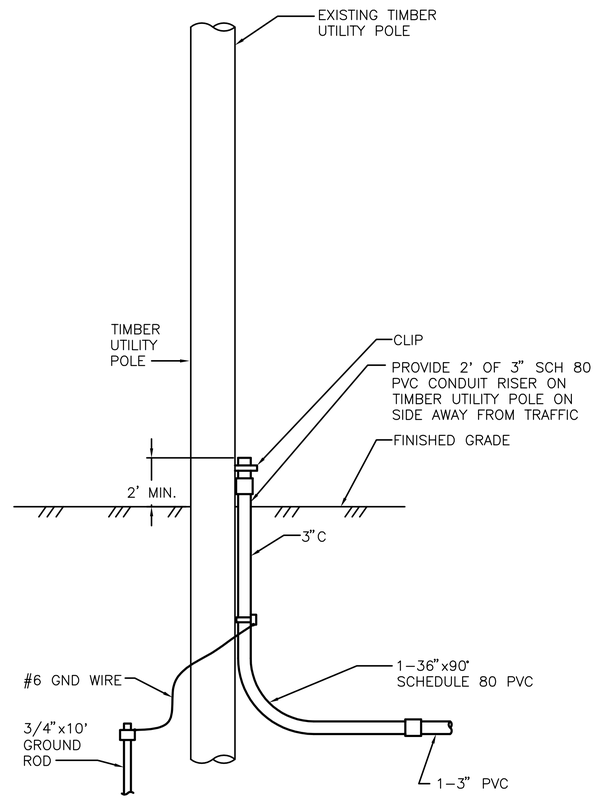

RISER POLE DETAIL

NOT TO SCALE

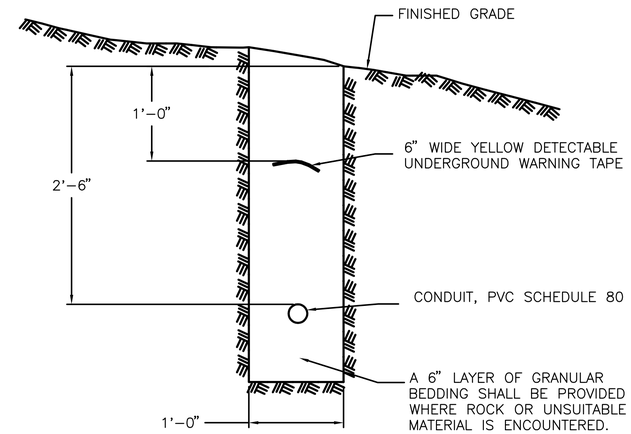

NOTE:

1. BACKFILL ABOVE CONDUIT SHALL BE IN ACCORDANCE WITH STANDARD SPECIFICATION SECTION 614.

CONDUIT IN TRENCH DETAIL

NOT TO SCALE

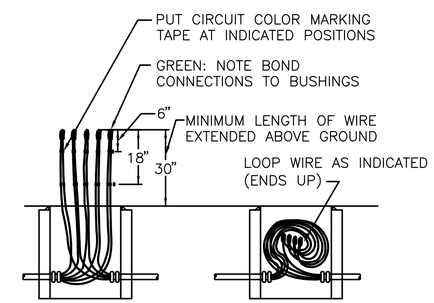

NOTES:

1. ALL CONDUIT ENTERING HANDHOLES SHALL EXTEND INTO THE HANDHOLE CAVITY BY AT LEAST 2". PROVIDE BELL ENDS ON ALL CONDUITS.
2. ALL SPLICES MADE IN HANDHOLES ARE TO BE WATERTIGHT. MAKE SPLICES IN HANDHOLES ONLY WHEN NECESSARY.

HANDHOLE WIRING DETAIL

NOT TO SCALE

GENERAL NOTES:

1. CONDUIT RUNS ARE DIAGRAMMATIC. COORDINATE CONDUIT RUNS WITH ALL OTHER EXISTING OR PROPOSED UNDERGROUND UTILITIES AND STRUCTURES.
2. COORDINATE ELECTRIC SERVICE WITH PSNH ELECTRIC COMPANY. ALL WORK ASSOCIATED WITH THE ELECTRIC SERVICE MUST BE COMPLETED IN ACCORDANCE WITH PSNH STANDARDS.
3. ALL UTILITY BACK CHARGES ARE THE RESPONSIBILITY OF THE CONTRACTOR FOR ALL WORK PERTAINING TO THIS PROJECT. COORDINATE ALL PERMANENT AND TEMPORARY POWER WITH THE UTILITY.
4. ALL ELECTRICAL EQUIPMENT SHALL BE UL LISTED FOR ITS INTENDED USE.
5. ALL CONDUIT AND EQUIPMENT TO BE INSTALLED SHALL BE GROUNDED IN ACCORDANCE WITH THE LATEST EDITION OF THE NATIONAL ELECTRICAL CODE AND APPLICABLE LOCAL CODES.
6. ALL WIRING IN THE HANDHOLES, PANELBOARDS AND CABINETS SHALL BE PERMANENTLY LABELED AND NEATLY INSTALLED.
7. NO WIRE SHALL BE DRAWN INTO ANY CONDUIT UNTIL ALL WORK WHICH MAY CAUSE CABLE DAMAGE IS COMPLETE.
8. THE CONTRACTOR SHALL CAREFULLY MARK THE PROPOSED LOCATION OF THE CONCRETE FOUNDATION AND THEN SHALL DETERMINE IF ANY UTILITIES, OR UNDERGROUND OR OVERHEAD OBSTRUCTION WILL PREVENT THE INSTALLATION AT THIS LOCATION. SIMILAR MARKING SHALL BE DONE FOR THE CONDUIT RUNS TO THE FOUNDATION. IF SUCH AN OBSTRUCTION IS EVIDENT, THE CONTRACTOR SHALL REQUEST PERMISSION FROM THE ENGINEER TO MOVE OR ADJUST THE LOCATION OF THE FOUNDATION.
9. ALL WIRE SHALL BE CONTINUOUS FROM HANDHOLE TO HANDHOLE WITHOUT RUNNING SPLICES IN CONDUITS. ALL WIRES SHALL EXTEND 24" ABOVE THE PULL BOX, CONNECTED AT ENDS AND ROLLED BACK INTO THE PULL BOX.
10. ALL CONDUIT SHALL BE PVC SCHEDULE 80 UNLESS NOTED OTHERWISE. CONDUIT SIZES SHALL BE AS FOLLOWS:
    - 3" FROM LIGHTING LOAD CENTER TO SERVICE CONNECTION.
    - 3" FROM LIGHTING LOAD CENTER TO HANDHOLES.
    - 3" BETWEEN HANDHOLES.
    - 2" BETWEEN HANDHOLES AND LIGHT POLES.

REVISIONS AFTER PROPOSAL

NUMBER	DATE	STATION	DESCRIPTION
		STATION	

SDR PROCESSED	ARM	DATE 08/11
NEW DESIGN	DEM	DATE 05/13
SHEET CHECKED	TAT	DATE 05/13
AS BUILT DETAILS		DATE

STATE OF NEW HAMPSHIRE

DEPARTMENT OF TRANSPORTATION ∘ BUREAU OF BRIDGE DESIGN

ELECTRICAL DETAILS

FAY SPOFFORD AND THORNDIKE, LLC

DGN	STATE PROJECT NO.	SHEET NO.	TOTAL SHEETS
	14957	16	157

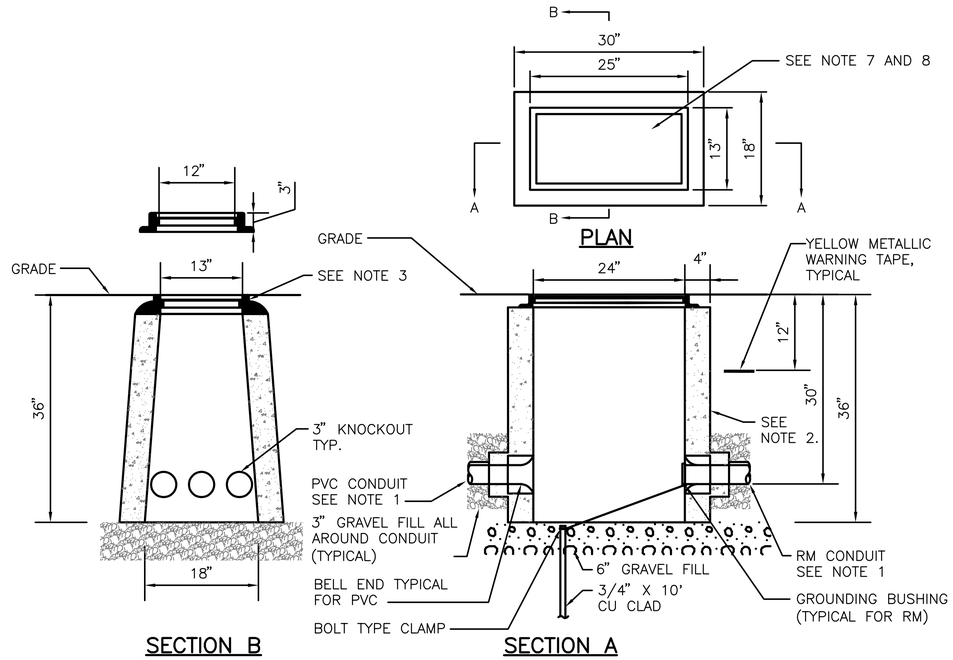

HANDHOLE DETAIL

NOT TO SCALE
ITEM NO: 614.522

HANDHOLE DETAIL NOTES:

1. ALL CONDUIT ENTERING HANDHOLES SHALL EXTEND INTO THE HANDHOLE CAVITY BY AT LEAST 2".
2. ALL HANDHOLES SHALL BE PRECAST CONCRETE, AND SHALL BE FREE OF CRACKS OR OTHER DEFECTS. CONCRETE FOR PRECAST CONCRETE PULLBOXES/HANDHOLES SHALL BE 4000 PSI, 3/4", 610 CEMENT CONCRETE MASONRY.
3. POLYMER CONCRETE FRAME SHALL BE BOLTED TO THE SURFACE OF THE PRECAST CONCRETE HANDHOLE.
4. ALL CONDUIT INSTALLED IN HANDHOLES SHALL BE INSTALLED IN KNOCKOUTS PROVIDED IN THE BOX AND NO EXCESS KNOCKOUTS SHALL BE MADE. THE KNOCKOUTS ARE DESIGNED TO BE MADE PRIOR TO BACKFILLING AROUND THE PULLBOXES AND HANDHOLES. AFTER THE CONDUIT HAS BEEN INSTALLED IN THE PULLBOX/HANDHOLE, THE OPEN SPACE BETWEEN THE BOX AND THE CONDUIT WILL BE SEALED WITH 4000 PSI CEMENT CONCRETE MASONRY. ANY CONDUIT INSTALLED IN SUCH A MANNER AS TO BLOCK COMPLETE ACCESS TO ANY OTHER CONDUIT SHALL BE REMOVED AND RESET.
5. FOR THE EXACT NUMBER, SIZE, AND ORIENTATION OF THE CONDUITS ENTERING THE HANDHOLE, SEE LIGHTING PLAN SHEETS.
6. HANDHOLE FRAME AND COVER TO BE NON-CONDUCTIVE FIBERGLASS REINFORCED POLYMER CONCRETE TYPE. FRAME AND COVER TO BE RATED FOR A STATIC DESIGN LOAD OF 15,000 LB OVER A 10"X10" AREA AND MUST PASS A MINIMUM STATIC TEST LOAD OF 22,568 LB. MINIMUM. FRAME AND COVER SHALL BE RATED ANSI TIER 15 MINIMUM.
7. FUNCTION DESIGNATION ON THE HANDHOLE SHALL BE LABELED AS FOLLOWS PER NEC ARTICLE 314.30D:

   "LIGHTING" FOR LIGHTING CONDUIT.
8. HANDHOLE FRAME AND COVER SHALL BE DARK GREEN (STANDARD FEDERAL COLOR #14062).
9. ALL SPLICES MADE IN HANDHOLES SHALL BE WATERTIGHT. MAKE SPLICES IN HANDHOLES ONLY WHEN NECESSARY.

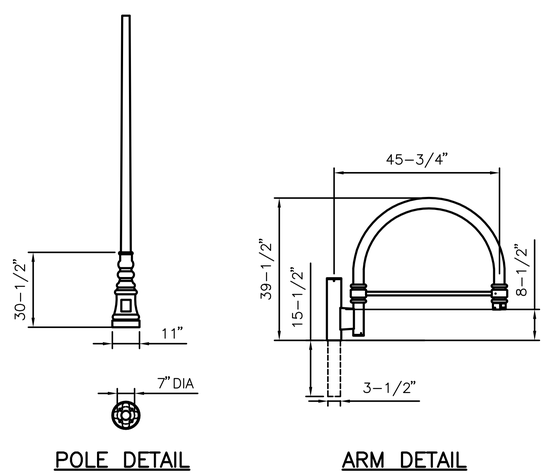

LIGHTING DETAILS

NOT TO SCALE

LIGHTING DETAIL NOTES:

1. FOR ADDITIONAL DETAILS, REFER TO SPECIAL PROVISIONS.
2. LUMINAIRE SHALL BE 120V, 80 LED, 4000K, TYPE II, HOUSE SIDE SHIELD, TOP ARM MOUNTED.
3. LIGHT POLE ARM SHALL BE 4" POST MOUNTED SINGLE ARM.
4. LIGHT POLE SHALL BE 12'-6" ORNAMENTAL LIGHT POLE, 4" DIAMETER, WITH GFI DUPLEX RECEPTACLE LOCATED 12" DOWN FROM TOP OF POLE.
5. LIGHT POLE SHALL BE PROVIDED WITH SINGLE ARM FLAG POLE BRACKET. BRACKET SHALL CLAMP ONTO 4" DIAMETER LIGHT POLE AND HOLD 1" FLAG POLE.
6. FINISH ON LUMINAIRE, POLE ARM, POLE, RECEPTACLE AND FLAG POLE BRACKET SHALL BE BLACK.

REVISIONS AFTER PROPOSAL			
NUMBER	DATE	STATION	STATION	DESCRIPTION

SDR PROCESSED	ARM	DATE 08/11
NEW DESIGN	DEM	DATE 05/13
SHEET CHECKED	TAT	DATE 05/13
AS BUILT DETAILS		DATE

STATE OF NEW HAMPSHIRE

DEPARTMENT OF TRANSPORTATION • BUREAU OF BRIDGE DESIGN

ELECTRICAL DETAILS

FAY SPOFFORD AND THORNDIKE, LLC

DGN	STATE PROJECT NO.	SHEET NO.	TOTAL SHEETS
	14957	17	157

PANELBOARD LC1–UNSWITCHED

UNSWITCHED LOADS ONLY

BUS: 120/240V, 1PH, 3W, 60HZ
MAIN LUGS ONLY : 100A
FEEDER SIZE: 3#2, 1#2–GND

SHORT CIRCUIT BRACING: 10–KAIC
CABINET: SURFACE
PANEL LOCATION: BRIDGE STREET AT STA 334+75 RIGHT

GROUND BAR

NEUTRAL

LOAD SERVED	HP	VA A	VA B	CKT. NO.	CKT. NO.	VA A	VA B	HP	LOAD SERVED
MAIN		–		1	2	50			CONTROL CKT
MAIN			–	3	4		180		GFI RECEPTACLE
SPARE		–		5	6	–			SPARE
SPARE			–	7	8		–		SPARE
SPARE		–		9	10	–			SPARE
SPACE			–	11	12		–		SPACE
SPACE		–		13	14	–			SPACE
SPACE			–	15	16		–		SPACE

PANELBOARD LC1–SWITCHED

SWITCHED LOADS ONLY

GROUND BAR

NEUTRAL

LOAD SERVED	HP	VA A	VA B	CKT. NO.	CKT. NO.	VA A	VA B	HP	LOAD SERVED
LP7		275		17	18	–			SPARE
LP8			275	19	20		–		SPARE
SPARE		–		21	22	–			SPARE
SPARE			–	23	24		–		SPARE
SPARE		–		25	26	–			SPARE
SPACE			–	27	28		–		SPACE
SPACE		–		29	30	–			SPACE
SPACE			–	31	32		–		SPACE

VA A: 325 VA B: 455
TOTAL CONNECTED LOAD: 780 VA

ALL BRANCH C/B: 20 AMP TRIP UNLESS OTHERWISE NOTED

PANELBOARD LC2–UNSWITCHED

UNSWITCHED LOADS ONLY

BUS: 120/240V, 1PH, 3W, 60HZ
MAIN LUGS ONLY : 100A
FEEDER SIZE: 3#2, 1#2–GND

SHORT CIRCUIT BRACING: 10–KAIC
CABINET: SURFACE
PANEL LOCATION: MAPLE STREET AT STA 340+82 RIGHT

GROUND BAR

NEUTRAL

LOAD SERVED	HP	VA A	VA B	CKT. NO.	CKT. NO.	VA A	VA B	HP	LOAD SERVED
MAIN		–		1	2	50			CONTROL CKT
MAIN			–	3	4		180		GFI RECEPTACLE
SPARE		–		5	6	–			SPARE
SPARE			–	7	8		–		SPARE
SPARE		–		9	10	–			SPARE
SPACE			–	11	12		–		SPACE
SPACE		–		13	14	–			SPACE
SPACE			–	15	16		–		SPACE

PANELBOARD LC2–SWITCHED

SWITCHED LOADS ONLY

GROUND BAR

NEUTRAL

LOAD SERVED	HP	VA A	VA B	CKT. NO.	CKT. NO.	VA A	VA B	HP	LOAD SERVED
LP1, LP5		550		17	18	275			LP4
LP3			275	19	20		550		LP2, LP6
SPARE		–		21	22	–			SPARE
SPARE			–	23	24		–		SPARE
SPARE		–		25	26	–			SPARE
SPACE			–	27	28		–		SPACE
SPACE		–		29	30	–			SPACE
SPACE			–	31	32		–		SPACE

VA A: 875 VA B: 1005
TOTAL CONNECTED LOAD: 1880 VA

ALL BRANCH C/B: 20 AMP TRIP UNLESS OTHERWISE NOTED

ELECTRICAL KEYNOTES

A. COORDINATE WITH UTILITY TO PROVIDE 120/240V, 1PH, 3W, 100A SERVICE TO EXISTING UTILITY POLE.

B. PROVIDE LIGHTING LOAD CENTER #1 WITH 3' CLEARANCE FROM FOUNDATION TO SIDEWALK. PROVIDE 3"C, 3#2, 1#2G FROM SERVICE CONNECTION TO LIGHTING LOAD CENTER #1.

C. PROVIDE 3"C, 2#6, 1#6G FROM LIGHTING LOAD CENTER #1 TO HANDHOLE AT STA 335+01 LEFT.

D. PROVIDE 3"C, 2#6, 1#6G FROM LIGHTING LOAD CENTER #1 TO HANDHOLE AT STA 335+08 RIGHT.

E. PROVIDE 3"C, 4#6, 1#6G FROM HANDHOLE TO LIGHTING LOAD CENTER #2.

F. COORDINATE WITH UTILITY TO PROVIDE 120/240V, 1PH, 3W, 100A SERVICE TO EXISTING UTILITY POLE.

G. PROVIDE LIGHTING LOAD CENTER #2 WITH 3' CLEARANCE FROM FOUNDATION TO SIDEWALK. PROVIDE 3"C, 3#2, 1#2G FROM SERVICE CONNECTION TO LIGHTING LOAD CENTER #2.

H. PROVIDE 3"C, 4#6, 1#6G BETWEEN HANDHOLES.

REVISIONS AFTER PROPOSAL

NUMBER	DATE	STATION	STATION	DESCRIPTION

SDR PROCESSED ARM DATE 08/11
NEW DESIGN DEM DATE 05/13
SHEET CHECKED TAT DATE 05/13
AS BUILT DETAILS DATE

FAY SPOFFORD AND THORNDIKE, LLC

STATE OF NEW HAMPSHIRE
DEPARTMENT OF TRANSPORTATION • BUREAU OF BRIDGE DESIGN

ELECTRICAL DETAILS

DGN	STATE PROJECT NO.	SHEET NO.	TOTAL SHEETS
	14957	18	157

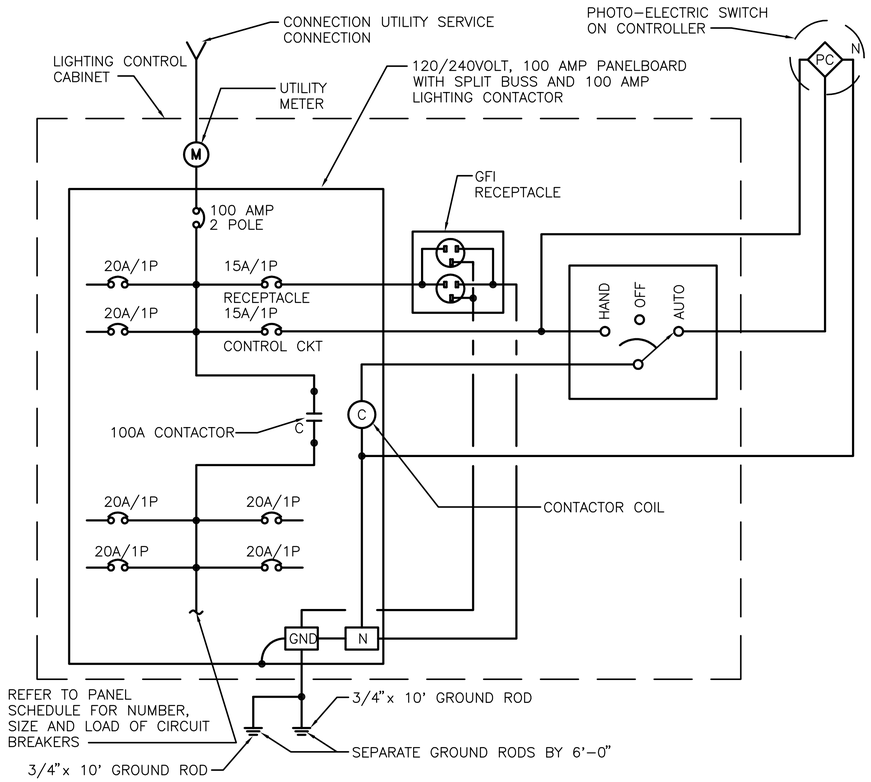

ONE LINE DIAGRAM

NOT TO SCALE

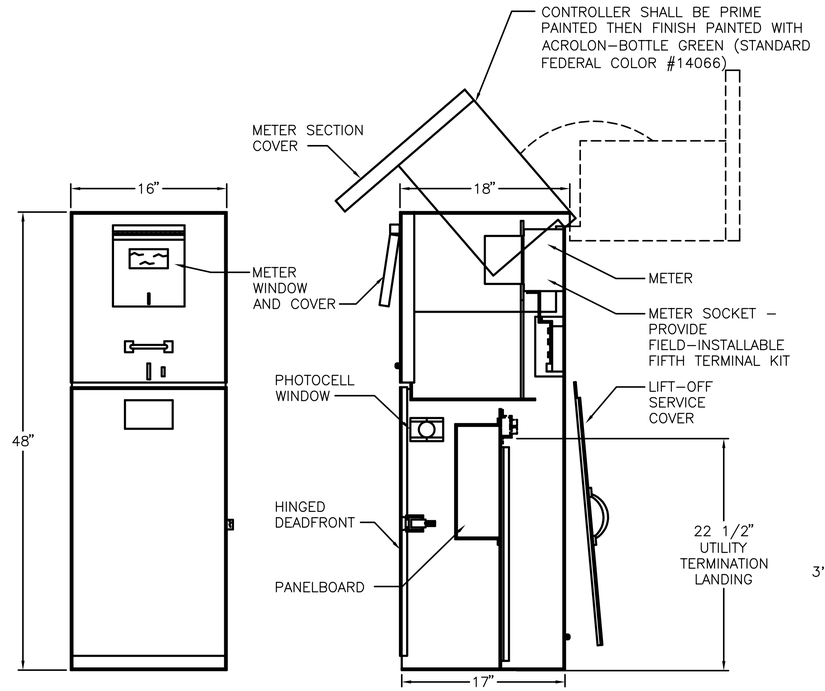

FRONT VIEW

SIDE VIEW

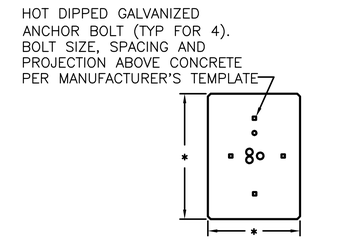

PLAN

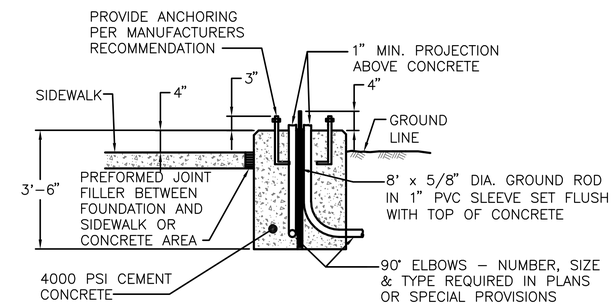

SECTION

NOTE: ALL EXPOSED EDGES SHALL BE CHAMFERED ¾".

CONCRETE FOUNDATION FOR LIGHTING LOAD CENTER

NOT TO SCALE

NOTES:

1. PROVIDE ALL ELECTRICAL EQUIPMENT IN THE LIGHTING CONTROL CABINET AS INDICATED ON THE ONE LINE DIAGRAM AND AS SPECIFIED IN SPECIAL PROVISION SECTION 600 INCIDENTAL CONSTRUCTION.

LIGHTING LOAD CENTER DETAIL

NOT TO SCALE

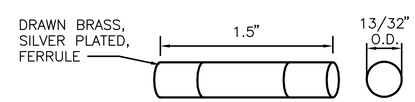

SIZE: MIDGET
TYPE: CURRENT LIMITING FUSE
VOLTAGE RATING: 120 VOLTS
USE: PROTECTION OF AREA LIGHTING EQUIPMENT

FUSES

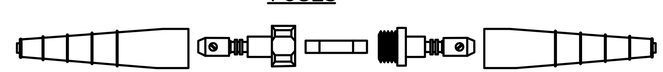

RATING: 600 VOLTS - 20 AMPS.	
FUSE SIZE: 1 1/2" x 13/32" O.D. - FERRULE 3/8"	
CONNECTOR SIZE: 8 1/2" x 7/8" O.D.	
CONNECTOR TYPE:	FUSE - QUICK DISCONNECT SET SCREW TYPE CONNECTION
CONNECTOR MATERIAL:	MOLDED PLASTIC BODY WITH RUBBER INSULATING BOOTS.
CONDUCTOR SIZE:	LINE AND LOAD #2 AWG THROUGH #12 AWG
REQUIRED FEATURES:	WATERTIGHT NO TAPING OR SEALANT REQUIRED
-FUSE HELD IN LOAD SIDE WHEN CONNECTOR IS DISCONNECTED. -PROVIDE APPROVED FUSE HOLDER WITH "DUMMY" ROD BLANK FUSE FOR NEUTRALS	

FUSE HELD IN LOAD SIDE WHEN CONNECTOR IS DISCONNECTED.

STRAIGHT THRU CONNECTOR

NOT TO SCALE

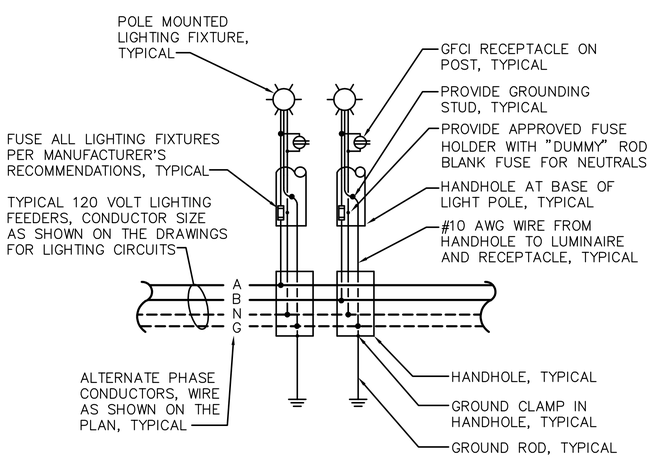

CIRCUITING ONE-LINE DIAGRAM

NOT TO SCALE

NUMBER	DATE	STATION	STATION	DESCRIPTION

REVISIONS AFTER PROPOSAL

SDR PROCESSED	ARM	DATE	08/11
NEW DESIGN	DEM	DATE	05/13
SHEET CHECKED	TAT	DATE	05/13
AS BUILT DETAILS		DATE	

STATE OF NEW HAMPSHIRE

DEPARTMENT OF TRANSPORTATION • BUREAU OF BRIDGE DESIGN

ELECTRICAL DETAILS

FAY SPOFFORD AND THORNDIKE, LLC

DGN	STATE PROJECT NO.	SHEET NO.	TOTAL SHEETS
	14957	19	157

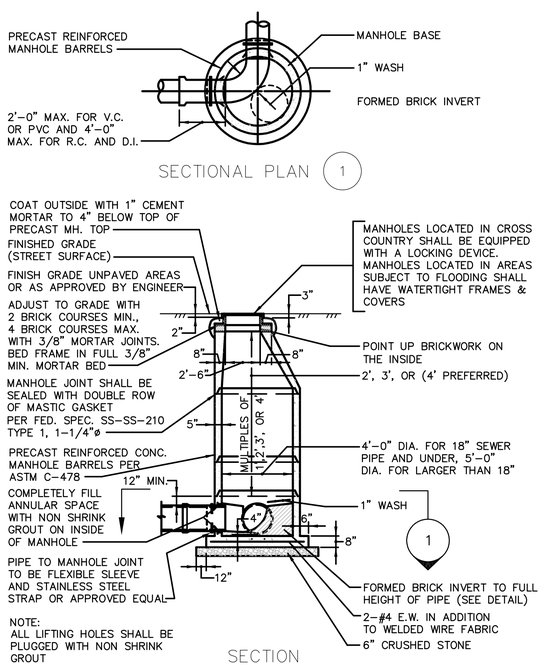

STANDARD SEWER MANHOLE
NOT TO SCALE

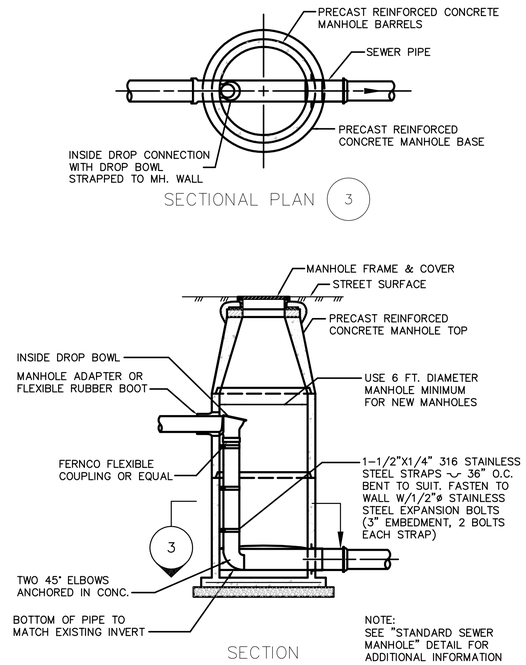

INSIDE DROP SEWER MANHOLE
NOT TO SCALE

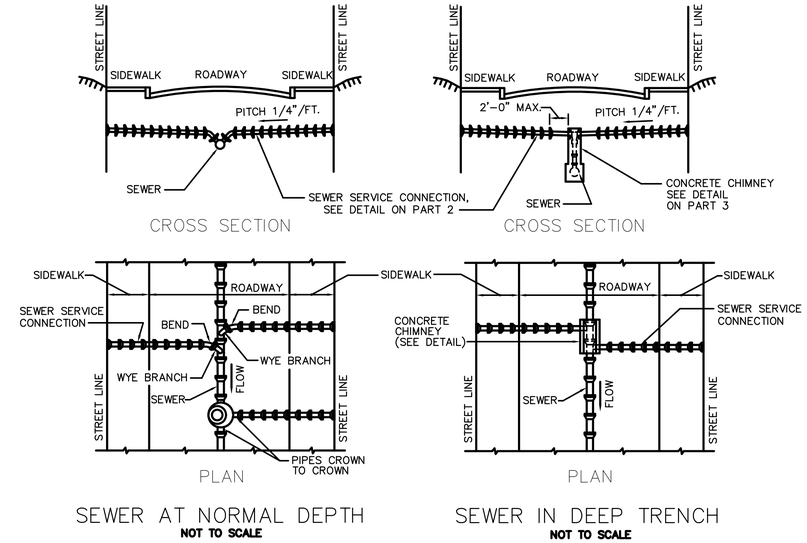

SEWER AT NORMAL DEPTH
NOT TO SCALE

SEWER IN DEEP TRENCH
NOT TO SCALE

SEWER SERVICE CONNECTIONS

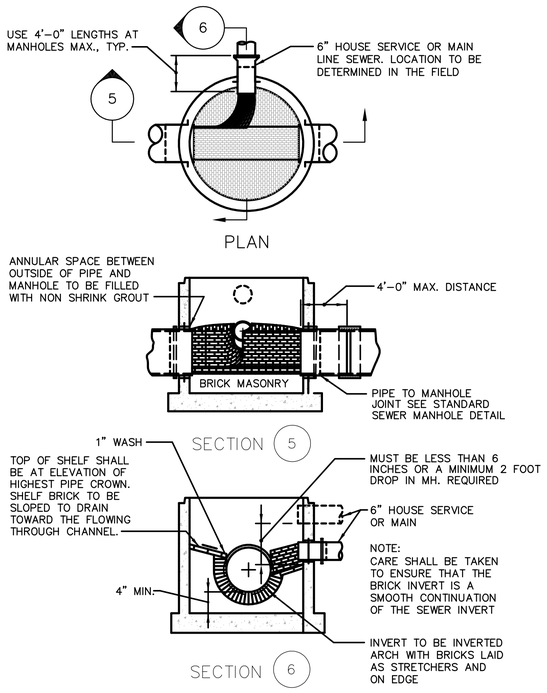

TYPICAL BRICK INVERT
NOT TO SCALE

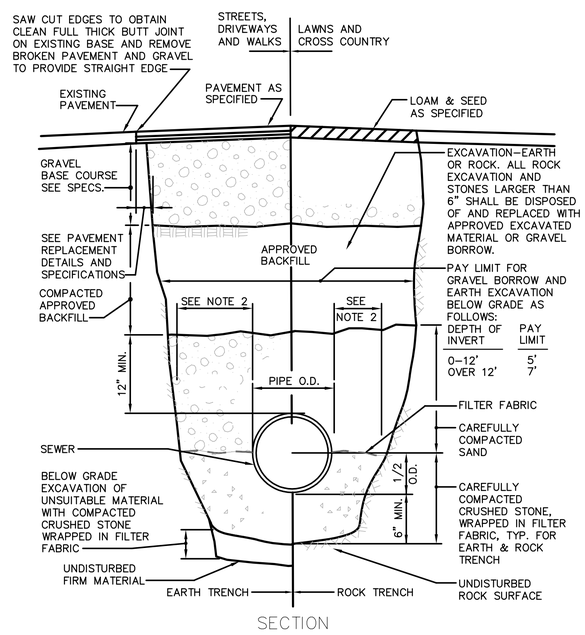

SEWER TRENCH-EARTH AND ROCK
NOT TO SCALE

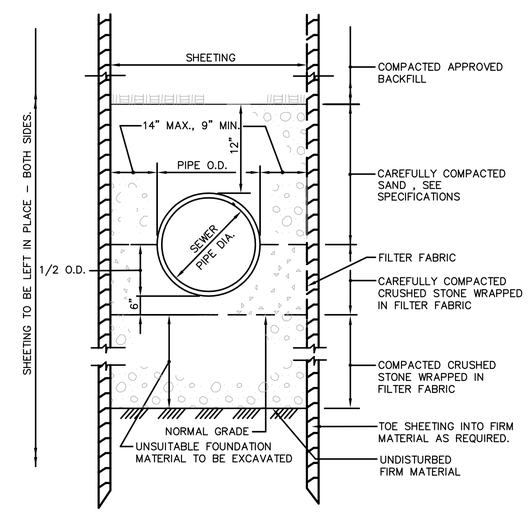

NOTE:
REFER TO SPECIAL PROVISIONS FOR MATERIAL, BACKFILLING AND COMPACTION REQUIREMENTS.

SEWER TRENCH - SHEETED
NOT TO SCALE

NOTES:

1. REFER TO SPECIAL PROVISIONS FOR MATERIAL, DEWATERING BACKFILLING AND COMPACTION REQUIREMENTS.
2. TRENCH DIMENSIONS SHALL BE AS FOLLOWS:
   (i) FOR SEWER PIPE LESS THAN 15 INCHES IN DIAMETER, THE ALLOWABLE TRENCH WIDTH AT A PLANE 12 INCHES ABOVE THE PIPE SHALL BE NO MORE THAN 36 INCHES; AND
   (ii) FOR PIPE 15 INCHES AND LARGER, THE ALLOWABLE TRENCH WIDTH SHALL BE EQUAL TO THE PIPE OUTSIDE DIAMETER PLUS 24 INCHES

FAY, SPOFFORD & THORNDIKE, LLC

STATE OF NEW HAMPSHIRE
DEPARTMENT OF TRANSPORTATION • BUREAU OF BRIDGE DESIGN

STANDARD SEWER DETAILS - 1

DGN	STATE PROJECT NO.	SHEET NO.	TOTAL SHEETS
	14957	20	157

REVISIONS AFTER PROPOSAL

NUMBER	DESCRIPTION	STATION	STATION	DATE

NOTEBOOKS
BOOK PAGE
BOOK PAGE
BOOK PAGE

EXISTING DETAIL	ARM	DATE 08/11
PROPOSED DESIGN	RHD	DATE 05/13
SHEET CHECKED	BES	DATE 05/13
AS BUILT DETAILS		DATE

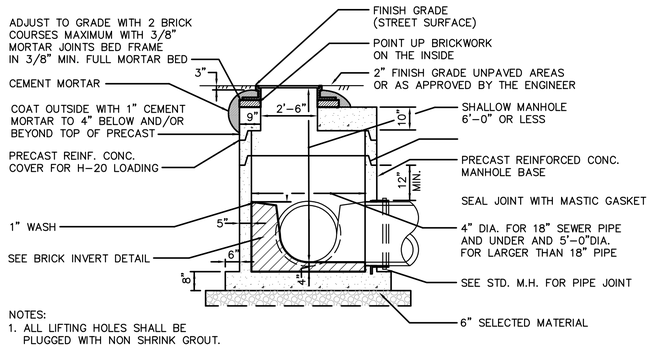

NOTES:
1. ALL LIFTING HOLES SHALL BE PLUGGED WITH NON SHRINK GROUT.
2. FOR ADDITIONAL NOTATIONS SEE "STANDARD SEWER MANHOLE" ON THIS SHEET.

ELEVATION

SHALLOW SEWER MANHOLE

NOT TO SCALE

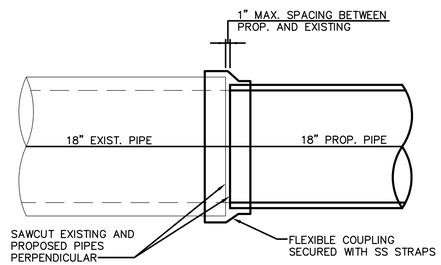

PLAN VIEW

PROPOSED PIPE TO EXISTING PIPE CONNECTION

NOT TO SCALE

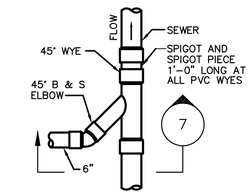

PLAN

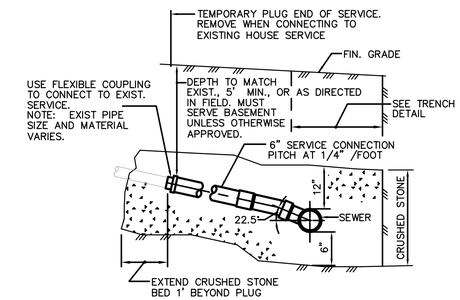

SECTION 7

DETAIL OF SEWER AT NORMAL DEPTH

NOT TO SCALE

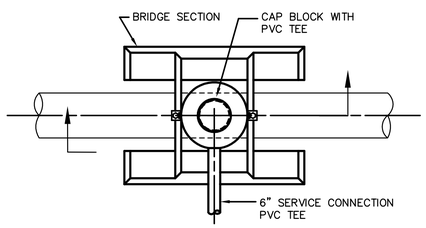

PLAN

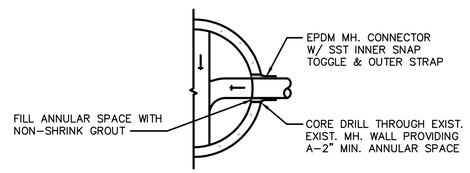

SECTIONAL PLAN

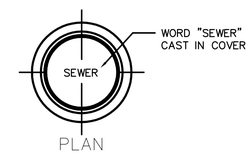

PLAN

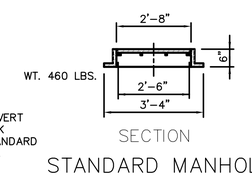

SECTION

NEW SEWER CONNECTION TO EXISTING SEWER MANHOLE

NOT TO SCALE

SECTION

STANDARD MANHOLE FRAME AND COVER

NOT TO SCALE

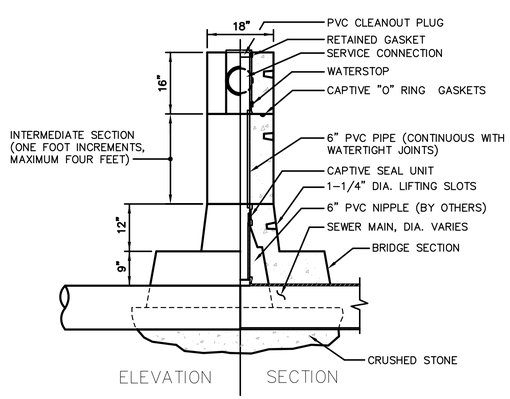

ELEVATION SECTION

DETAIL OF PRECAST SEWER SERVICE CHIMNEY

NOT TO SCALE

NUMBER	DATE	STATION	STATION	DESCRIPTION

REVISIONS AFTER PROPOSAL

NOTEBOOKS		
BOOK	PAGE	
BOOK	PAGE	
BOOK	PAGE	

EXISTING DETAIL	ARM	DATE 08/11
PROPOSED DESIGN	RHD	DATE 05/13
SHEET CHECKED	BES	DATE 05/13
AS BUILT DETAILS		DATE

FAY, SPOFFORD & THORNDIKE, LLC

STATE OF NEW HAMPSHIRE

DEPARTMENT OF TRANSPORTATION ∘ BUREAU OF BRIDGE DESIGN

STANDARD SEWER DETAILS - 2

DGN	STATE PROJECT NO.	SHEET NO.	TOTAL SHEETS
	14957	21	157

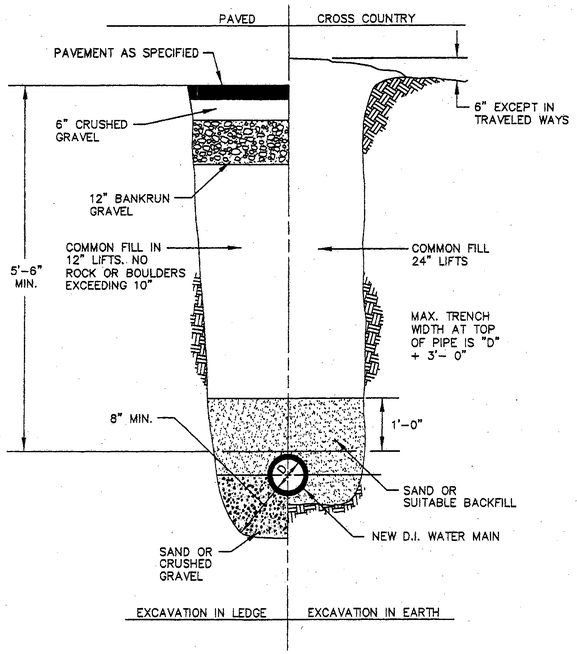

TYPICAL TRENCH SECTION – DUCTILE IRON

N.T.S.

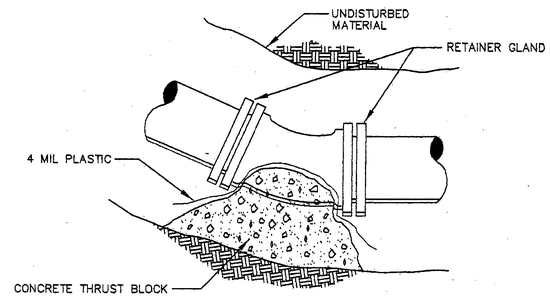

M.J. BEND

N.T.S.

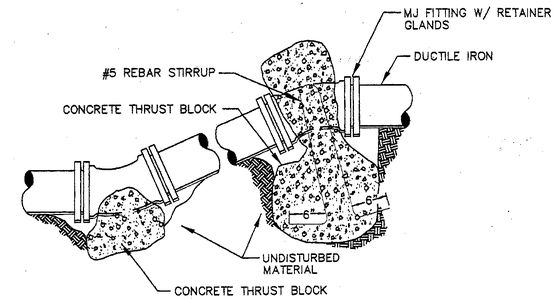

NOTE: EXTEND REINFORCED THRUST BLOCK 2' MINIMUM EITHER SIDE OF FITTING TO MAXIMIZE DOWN-PRESSURE EFFECT OF EARTH BACKFILL.

MJ VERTICAL BENDS – ELEVATION

N.T.S.

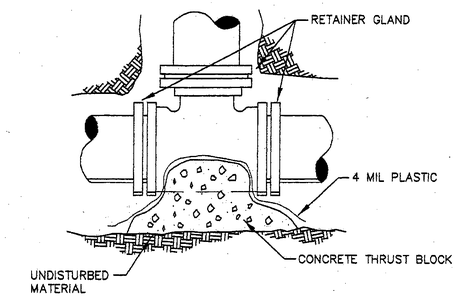

M.J. TEE

N.T.S.

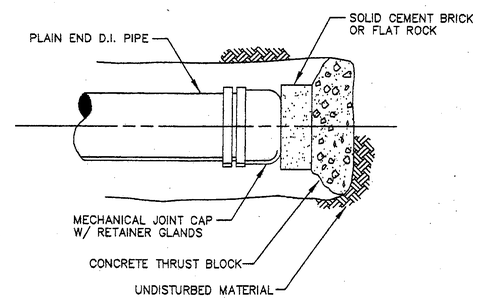

MJ CAP

N.T.S.

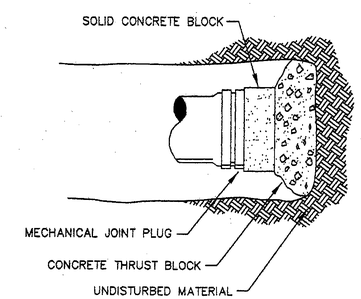

MJ PLUG

N.T.S.

THRUST BLOCK BEARING AREA IN SQ. FT.
(PRESSURE = 150 PSI, FACTOR OF SAFETY = 2.0)

FITTINGS	WET SILT & SOFT CLAY	SILT	SAND	COARSE SAND & GRAVEL	HARDPAN
16" TEE, CAP	60.3	30.2	20.1	15.1	12.1
1/4 BEND	85.3	42.7	28.4	21.3	17.1
1/8 BEND	46.2	23.1	15.4	11.5	9.2
1/16 BEND	23.5	11.8	7.8	5.9	4.7
1/32 BEND	11.8	5.9	3.9	3.0	2.4
12" TEE, CAP	33.9	17.0	11.3	8.5	6.8
1/4 BEND	48.0	24.0	16.0	12.0	9.6
1/8 BEND	26.0	13.0	8.7	6.5	5.2
1/16 BEND	13.2	6.6	4.4	3.3	2.6
1/32 BEND	6.7	3.3	2.2	1.7	1.5
10" TEE, CAP	23.6	11.8	7.9	5.9	4.7
1/4 BEND	33.3	16.7	11.1	8.3	6.7
1/8 BEND	18.0	9.0	6.0	4.5	3.6
1/16 BEND	9.2	4.6	3.1	2.3	1.8
1/32 BEND	4.6	2.3	1.5	1.5	1.5
8" TEE, CAP	15.1	7.5	5.0	3.8	3.0
1/4 BEND	21.3	10.7	7.1	5.3	4.3
1/8 BEND	11.5	5.8	3.8	2.9	2.3
1/16 BEND	5.9	2.9	2.0	1.5	1.5
1/32 BEND	3.0	1.5	1.5	1.5	1.5
6" TEE, CAP	8.5	4.2	2.8	2.1	1.7
1/4 BEND	12.0	6.0	4.0	3.0	2.4
1/8 BEND	6.5	3.2	2.2	1.6	1.3
1/16 BEND	3.3	1.7	1.1	1.0	1.0
1/32 BEND	1.7	1.0	1.0	1.0	1.0
4" TEE, CAP	3.8	1.9	1.3	0.9	0.8
1/4 BEND	5.3	2.7	1.8	1.3	1.5
1/8 BEND	2.9	1.4	1.0	0.7	0.6
1/16 BEND	1.5	0.7	0.5	0.5	0.5
1/32 BEND	0.7	0.5	0.5	0.5	0.5
3" TEE, CAP	2.1	1.1	0.7	0.5	0.5
1/4 BEND	3.0	1.5	1.0	0.7	0.6
1/8 BEND	1.6	0.8	0.5	0.5	0.5
1/16 BEND	0.8	0.5	0.5	0.5	0.5
1/32 BEND	0.5	0.5	0.5	0.5	0.5
2" TEE, CAP	0.9	0.5	0.5	0.5	0.5
1/4 BEND	1.3	0.7	0.5	0.5	0.5
1/8 BEND	0.7	0.5	0.5	0.5	0.5
1/16 BEND	0.5	0.5	0.5	0.5	0.5
1/32 BEND	0.5	0.5	0.5	0.5	0.5

SOIL TYPE	BEARING CAPACITY (psf)
MUCK	–0–
WET SILT & SOFT CLAY	1000
SILT	2000
SAND	3000
COARSE SAND & GRAVEL	4000
HARDPAN	5000

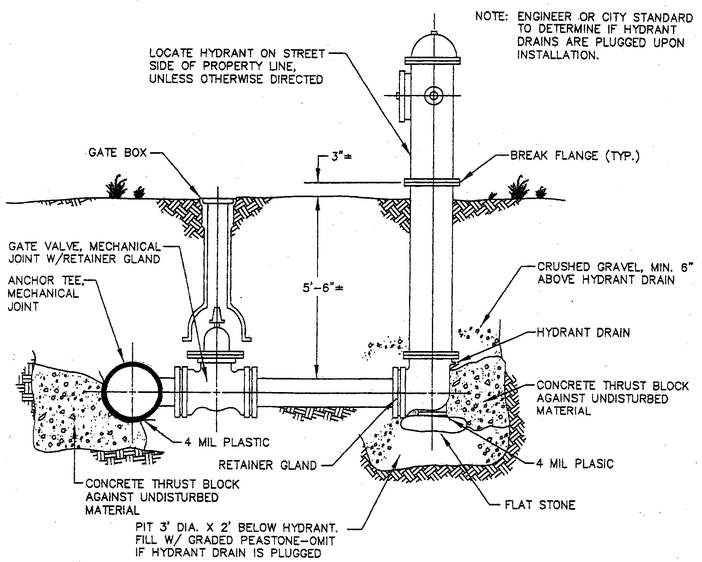

HYDRANT

N.T.S.

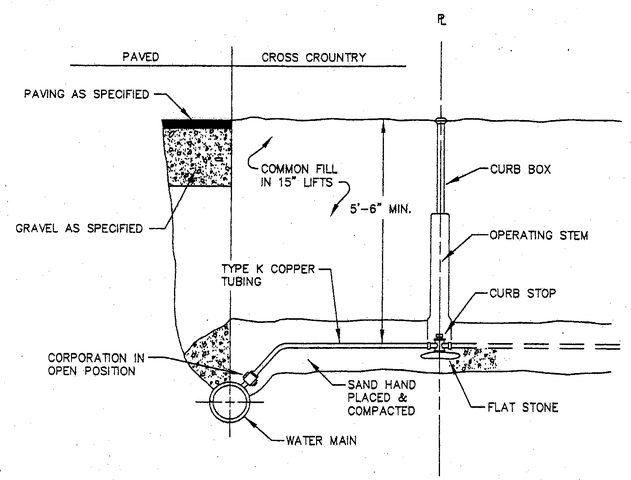

SERVICE CONNECTION

N.T.S.

FAY, SPOFFORD & THORNDIKE, LLC

STATE OF NEW HAMPSHIRE

DEPARTMENT OF TRANSPORTATION • BUREAU OF HIGHWAY DESIGN

WATER MAIN RELOCATION DETAILS

DGN	STATE PROJECT NO.	SHEET NO.	TOTAL SHEETS
	14957	22	157

REVISIONS AFTER PROPOSAL

NUMBER	DATE	STATION	STATION	DESCRIPTION

NOTEBOOKS

BOOK	PAGE	
BOOK	PAGE	
BOOK	PAGE	

EXISTING DETAIL		DATE
PROPOSED DESIGN	ED	DATE 4/09
SHEET CHECKED	GAB	DATE 4/09
AS BUILT DETAILS		DATE

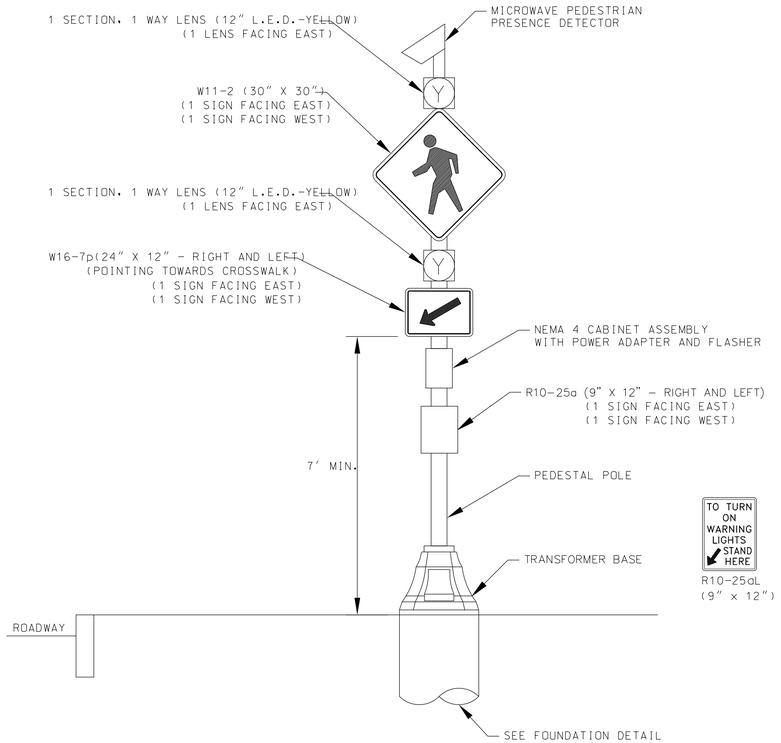

PEDESTRIAN CROSSWALK FLASHER DETAIL
NOT TO SCALE

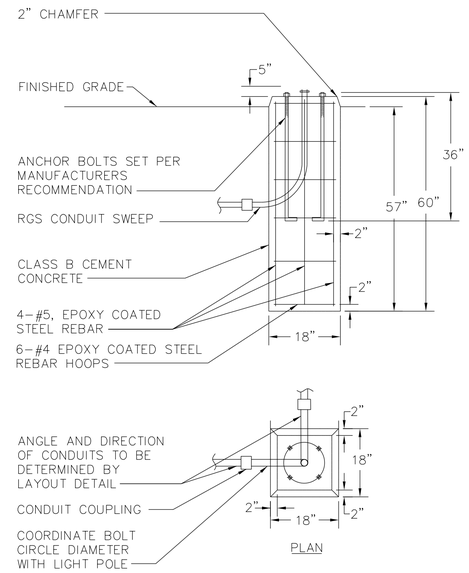

FOUNDATION DETAIL
NOT TO SCALE

NOTES:
1. THE BEACONS SHALL PROVIDE FLASHING OPERATION UPON PEDESTRIAN ACTUATION.

2. PEDESTRIANS SHALL BE DETECTED BY A MICROWAVE PEDESTRIAN PRESENCE DETECTOR, MOUNTED PER MANUFACTURERS RECOMMENDATION.

3. PEDESTRIAN CROSSWALK FLASHER MOUNTED IN ADVANCE OF CROSSWALK (AT APPROX. STA. 346+60 LT) SHALL NOT INCLUDE THE MICROWAVE DETECTOR, W16-7p AND R10-25a SIGNS. ONLY ONE W11-2 SIGN (FACING EAST) SHALL BE INSTALLED.

REVISIONS AFTER PROPOSAL

NUMBER	DATE	STATION	STATION	DESCRIPTION

SDR PROCESSED ARM	DATE 08/11	
NEW DESIGN DEM	DATE 05/13	
SHEET CHECKED TAT	DATE 05/13	
AS BUILT DETAILS	DATE	

FAY SPOFFORD AND THORNDIKE, LLC

STATE OF NEW HAMPSHIRE
DEPARTMENT OF TRANSPORTATION • BUREAU OF BRIDGE DESIGN

PEDESTRIAN CROSSWALK FLASHER AND FOUNDATION DETAIL

DGN	STATE PROJECT NO.	SHEET NO.	TOTAL SHEETS
FLASHER DETAIL	14957	23	157

NOTE: REFER TO PAVEMENT LAYOUT PLANS AND CROSS-SECTIONS FOR DRIVEWAY LENGTHS, WIDTHS, RADII, CURB CUTS, GRADES AND PAVEMENT & BASE COURSE DEPTHS

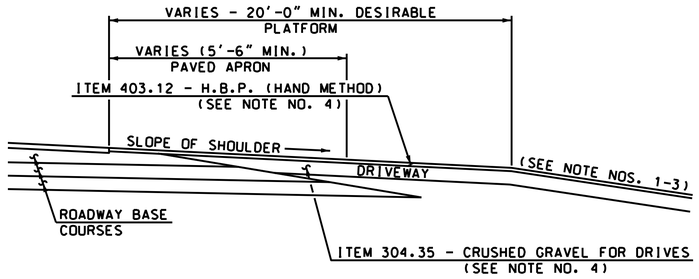

TYPICAL UNCURBED DRIVE IN FILL SECTION

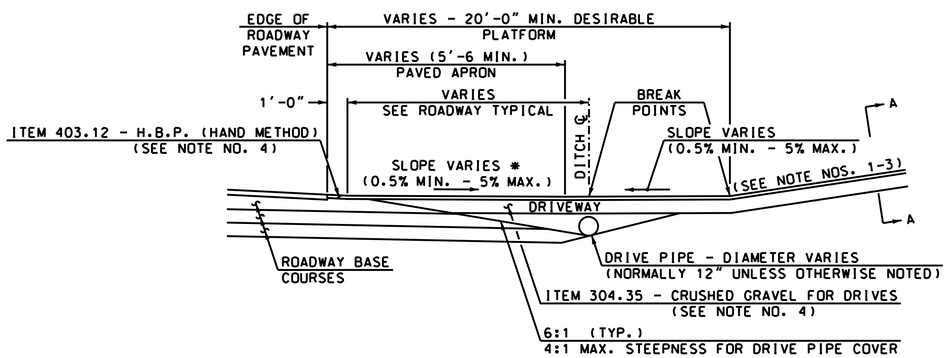

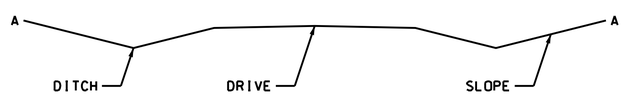

A-A DRIVEWAY CROSS-SECTION

TYPICAL UNCURBED DRIVE IN CUT SECTION

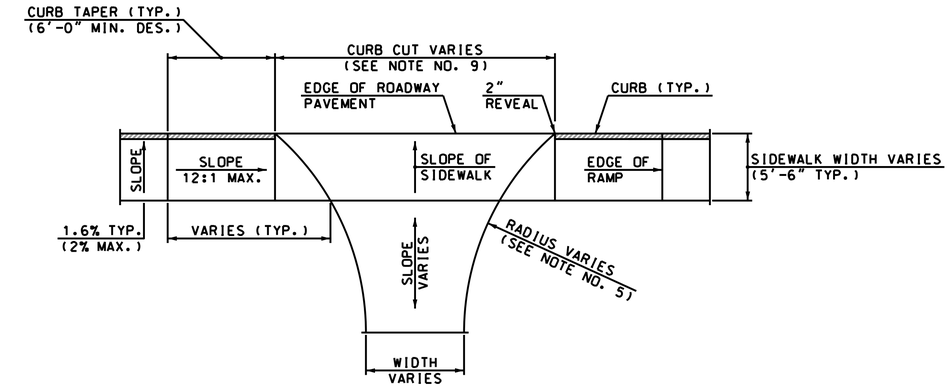

PLAN VIEW WITH SIDEWALK RAMP

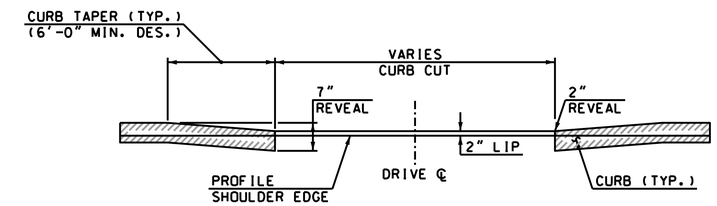

END VIEW

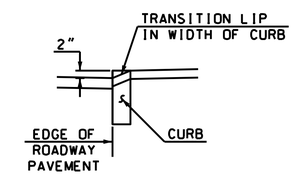

LIP DETAIL

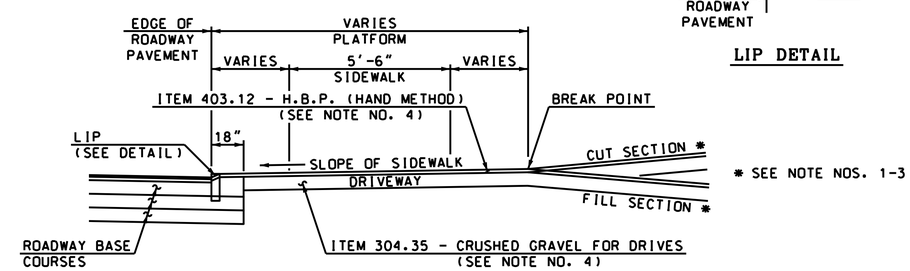

TYPICAL URBAN CURBED DRIVE IN CUT/FILL SECTION

GENERAL NOTES

1. GRADES OF MAJOR ENTRANCES BEYOND THE PLATFORM SHOULD NOT EXCEED 8%.
2. GRADES OF OTHER DRIVES BEYOND THE PLATFORM SHOULD NOT EXCEED 10%.
3. THE ALGEBRAIC DIFFERENCE BETWEEN TWO ADJACENT GRADES SHOULD NOT EXCEED 10%.
4. PAVEMENT AND BASE COURSE DEPTHS ARE:
   A. TYPICALLY 8" CRUSHED GRAVEL WITH 3" HBP (HAND METHOD. PLACED IN 2 COURSES) FOR RESIDENTIAL DRIVES ADJACENT TO ROADWAYS WITH CONVENTIONAL CRUSHED GRAVEL. GRAVEL. AND SAND STRUCTURAL BOX. IF THE DRIVE IS ADJACENT TO A ROADWAY WITH A CRUSHED STONE STRUCTURAL BOX. 6" OF CRUSHED STONE FINE GRADATION MAY BE SUBSTITUTED FOR THE 8" OF CRUSHED GRAVEL NOTED ABOVE.
   B. TYPICALLY 12" CRUSHED GRAVEL WITH 3" HBP (HAND METHOD. PLACED IN 2 COURSES) FOR COMMERCIAL DRIVES WITH FREQUENT HEAVY TRUCK TRAFFIC THAT ARE ADJACENT TO ROADWAYS WITH CONVENTIONAL CRUSHED GRAVEL. GRAVEL. AND SAND STRUCTURAL BOX. IF THE DRIVE IS ADJACENT TO A ROADWAY WITH A CRUSHED STONE STRUCTURAL BOX. 9" OF CRUSHED STONE FINE GRADATION MAY BE SUBSTITUTED FOR THE 12" OF CRUSHED GRAVEL NOTED ABOVE.
5. FOR DESIGN CRITERIA AND OTHER ADDITIONAL INFORMATION. REFER TO THE NHDOT DRIVEWAY MANUAL.
6. DITCHES ARE RECOMMENDED FOR UNCURBED DRIVEWAYS IN CUT SLOPES.
7. USE SLOPED END SECTIONS ON DRIVE PIPES FOR UNCURBED DRIVEWAYS.
8. CURBING CAN BE FLARED TO FIT DRIVE RADII IF APPROPRIATE OR ENDED AS DETAILED ABOVE.
9. CURB CUTS FOR RESIDENTIAL DRIVES WITH ANGLES OF ENTRY OF 75°-90° ARE TYPICALLY 25'-0".

STATE OF NEW HAMPSHIRE

DEPARTMENT OF TRANSPORTATION • BUREAU OF HIGHWAY DESIGN

DRIVEWAY DETAILS

REVISION DATE	DGN	STATE PROJECT NO.	SHEET NO.	TOTAL SHEETS
06/04/12	driveway	14957	24	157

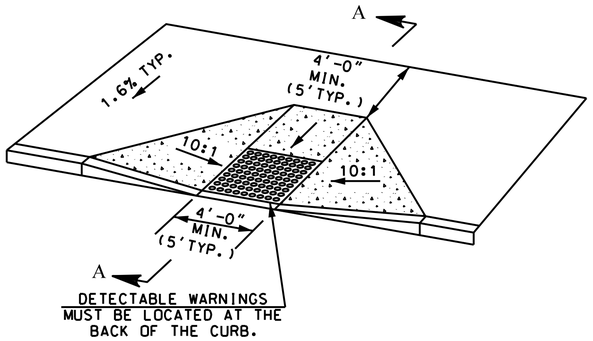

PERPENDICULAR CURB RAMP DETAIL

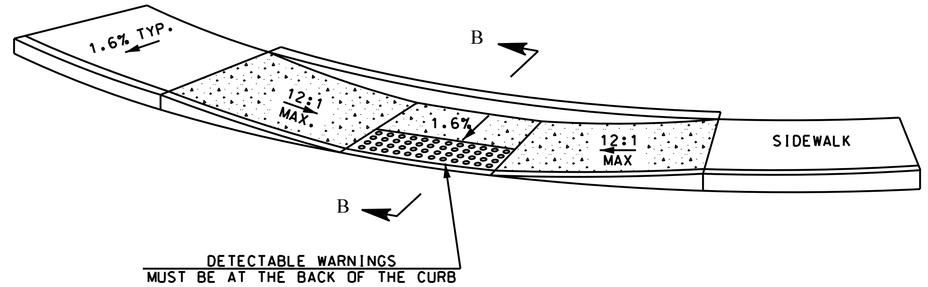

PARALLEL CURB RAMP DETAIL

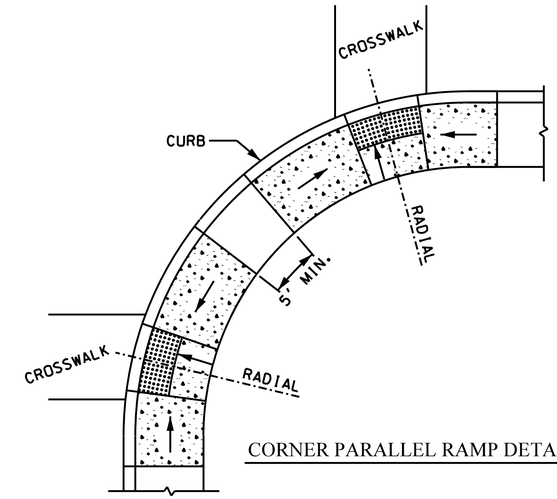

CORNER PARALLEL RAMP DETAIL

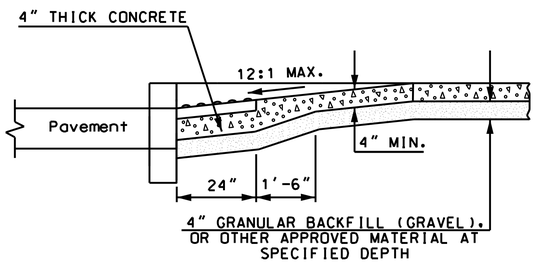

SECTION A-A

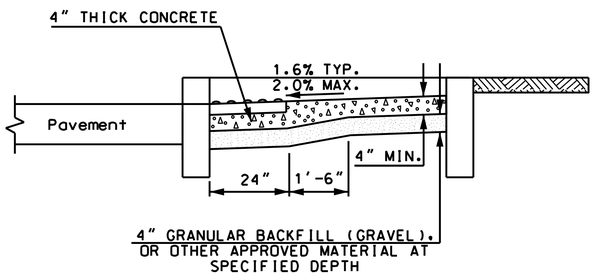

SECTION B-B

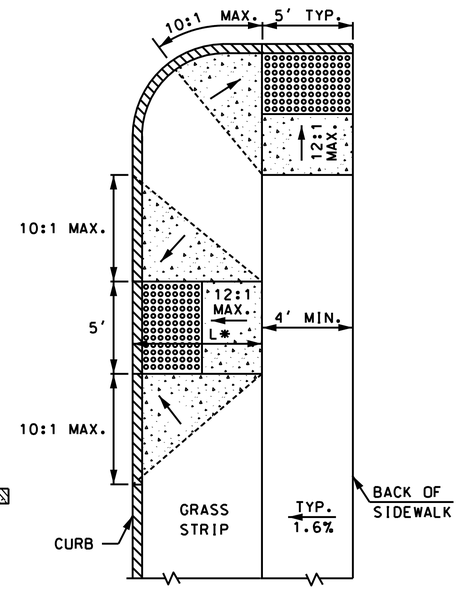

PERPENDICULAR RAMP WITH GRASS PANEL

* LENGTH OF RAMP VARIES WITH SLOPE & WIDTH OF GRASS PANEL

TRANSITION RAMPS:

BLENDED TRANSITIONS HAVE A RUNNING SLOPE GREATER THAN 2% BUT LESS THAN 5%. CURB RAMPS HAVE A RUNNING SLOPE OF 5% MIN. TO 8.33% MAX. SIDEWALK, BLENDED TRANSITIONS, AND CURB RAMPS HAVE A MAX. CROSS SLOPE OF 2%.

ALL GRADE BREAKS BETWEEN LANDINGS, RAMPS, AND BLENDED TRANSITIONS SHALL BE PERPENDICULAR TO THE DIRECTION OF TRAVEL.

IF IT IS NECESSARY TO USE SIDEWALK WIDTHS 5'-0" OR LESS, PROVIDE A WIDENED AREA A MINIMUM OF 5'-0" WIDE BY 5'-0" LONG SPACED AT INTERVALS OF 200' MAXIMUM TO ALLOW FOR USERS TO PASS EACH OTHER.

PROVIDE DETECTABLE WARNING SURFACES ANYTIME THAT A CURB RAMP, BLENDED TRANSITION, OR LANDING CONNECTS TO A STREET. PLACEMENT FOR DETECTABLE WARNING SURFACES ARE AS FOLLOWS:

PERPENDICULAR CURB RAMPS:

WHERE BOTH ENDS OF THE BOTTOM GRADE ARE LESS THAN 5'- 0" FROM THE BACK OF THE CURB, LOCATE THE DETECTABLE WARNING PANELS ON THE RAMP SURFACE AT THE BOTTOM OF THE RAMP. WHERE EITHER END OF THE BOTTOM GRADE IS GREATER THAN 5'-0" FROM THE BACK OF THE CURB, LOCATE THE DETECTABLE WARNINGS AT THE BOTTOM OF THE LANDING.

PARALLEL CURB RAMPS:

LOCATE THE DETECTABLE WARNING SURFACES AT THE BACK OF THE CURB ALONG THE EDGE OF THE LANDING.

FOR BLENDED TRANSITIONS AND LANDINGS:

LOCATE THE DETECTABLE WARNING SURFACES AT THE BACK OF THE CURB.

THE ORDER OF PREFERENCE FOR LOCATION OF CORNER RAMPS:

1. TWO SEPARATE RAMPS LOCATED ON TANGENT SIDEWALK AREA IMMEDIATELY OUTSIDE OF CORNER RADIUS.
2. TWO SEPARATE RAMPS SEPARATED BY 5' MINIMUM AS SHOWN ABOVE.
3. SINGLE RAMP SERVING TWO CROSSWALKS.

GENERAL NOTES

1. THE MAXIMUM RUNNING SLOPE OF ANY SIDEWALK CURB RAMP IS 12:1. THE MAXIMUM CROSS SLOPE IS 2%. THE SLOPE OF THE LANDING SHALL NOT EXCEED 2% IN ANY DIRECTION.

   RAMP RUNNING SLOPE EXCEPTION: A GREATER THAN 8.33% RAMP RUNNING GRADE IS ALLOWED WHERE THE THE ROADWAY AND THE SIDEWALK(S) ARE PARALLEL AND VERY CLOSE TOGETHER, WITH THE SAME GRADE, AND USING A GRADE OF 8.33% WOULD RESULT IN A RAMP LENGTH LONGER THAN 15'. IN THOSE CIRCUMSTANCES USE A MAXIMUM RAMP LENGTH OF 15'AND THE ALLOWABLE RUNNING SLOPE OF THE RAMP(S) IS GREATER THAN 8.33%.
2. TRANSITIONS SHALL BE FLUSH AND FREE OF ABRUPT CHANGES. ROADWAY SHOULDER SLOPES ADJOINING SIDEWALK CURB RAMPS SHALL BE A MAXIMUM OF 5% (FULL WIDTH) FOR A DISTANCE OF 2 FT. FROM THE ROADWAY CURBLINE.
3. INTERCEPT DRAINAGE ALONG THE CURB IN ADVANCE OF SIDEWALK CURB RAMPS OR LANDINGS. CATCH BASINS, MANHOLES, ETC. SHALL NOT BE LOCATED IN, OR AT THE BASE OF, SIDEWALK CURB RAMPS OR LANDINGS.
4. THE BOTTOM OF THE SIDEWALK CURB RAMP OR LANDING, EXCLUSIVE OF THE FLARED SIDES, SHALL BE WHOLLY CONTAINED WITHIN THE CROSSWALK MARKINGS.
5. THE SURFACE OF A PERPENDICULAR SIDEWALK CURB RAMP OR THE LANDING OF A PARALLEL SIDEWALK CURB RAMP SHALL CONTRAST VISUALLY WITH THE ADJOINING SIDEWALK SURFACE, EITHER ASPHALT/LIGHT-COLORED CONCRETE OR LIGHT-COLORED CONCRETE/DARK-STAINED CONCRETE. THE CONCRETE SURFACE SHALL BE SLIP RESISTANT.
6. DETECTABLE WARNING PANELS SHALL BE THE FULL WIDTH OF THE LANDING, BLENDED TRANSITION, OR CURB RAMP THEY ARE A PART OF AND SHALL BE A MINIMUM OF 2 FEET IN DEPTH. THE ROWS OF TRUNCATED DOMES SHALL BE ALIGNED PERPENDICULAR TO THE GRADE BREAK BETWEEN THE RAMP, BLENDED TRANSITION, OR LANDING AND THE STREET.

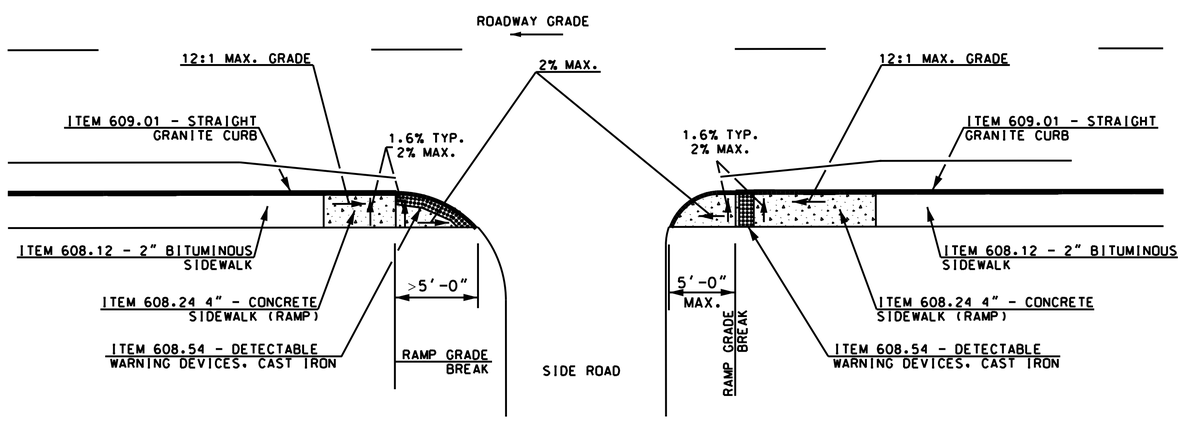

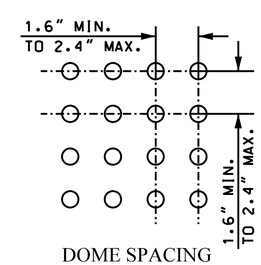

DOME SPACING

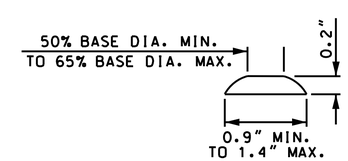

DOME SECTION

STATE OF NEW HAMPSHIRE

DEPARTMENT OF TRANSPORTATION ∘ BUREAU OF HIGHWAY DESIGN

SIDEWALK CURB RAMPS WITH DETECTABLE WARNINGS

DGN	STATE PROJECT NO.	SHEET NO.	TOTAL SHEETS
crbrmp.dgn	14957	25	157

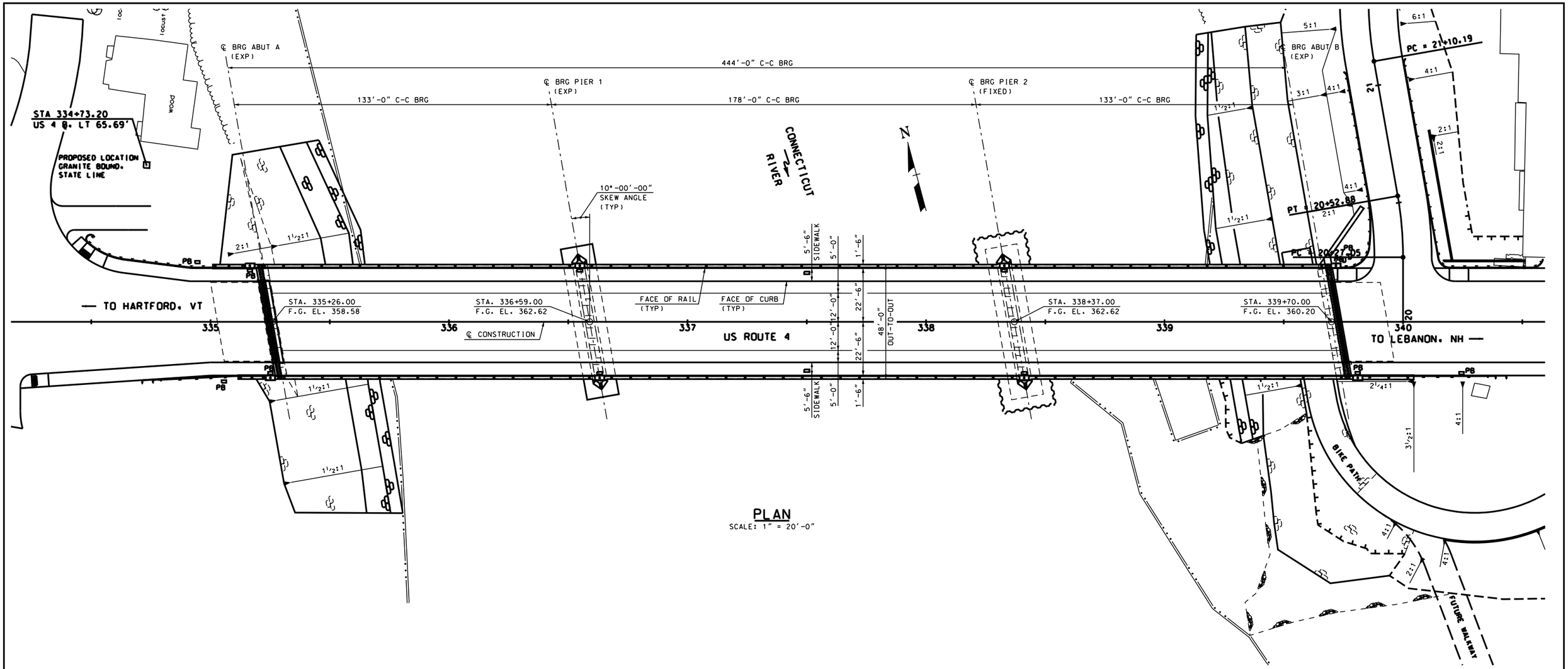

PLAN

SCALE: 1" = 20'-0"

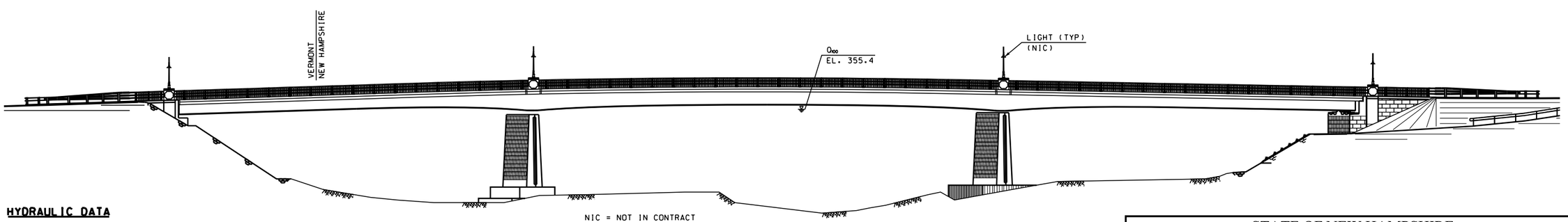

NIC = NOT IN CONTRACT

ELEVATION

SCALE: 1" = 20'-0"

HYDRAULIC DATA

1. DRAINAGE AREA: 4.300 SQUARE MILES
2. DESIGN FLOOD: Q100 = 108.000 CFS
3. DESIGN VELOCITY: 8.9 FPS
4. DESIGN FLOOD HEIGHT: ELEVATION 355.4'
5. BRIDGE WATERWAY OPENING: 12.500 SQ.FT. BELOW Q100 ELEVATION

STATE OF NEW HAMPSHIRE
DEPARTMENT OF TRANSPORTATION * BUREAU OF BRIDGE DESIGN

TOWN LEBANON, NH - HARTFORD, VT BRIDGE NO. 058\128 STATE PROJECT 14957

LOCATION US ROUTE 4 over CONNECTICUT RIVER

GENERAL PLAN AND ELEVATION

REVISIONS AFTER PROPOSAL		BY	DATE		BY	DATE
	DESIGNED	JWP	6/10	CHECKED	WPS	2/13
	DRAWN	SMG	6/10	CHECKED	JWP	2/13
	QUANTITIES	---	---	CHECKED	---	---

ISSUE DATE	FEDERAL PROJECT NO.	SHEET NO.	TOTAL SHEETS
REV. DATE	----------	26	157

BRIDGE SHEET 1 OF 71

FILE NUMBER 110-6-1

SUBDIRECTORY	.DGN LOCATOR	SHEET SCALE
BRC/BRSITE	14957Genplan	AS NOTED

DESIGN LOADS, MATERIALS AND SPECIFICATIONS

1. DESIGN LIVE LOADING: HL93
2. DESIGN METHOD: LOAD AND RESISTANCE FACTOR DESIGN (LRFD)
3. SPECIFICATIONS: AASHTO 2012 LRFD BRIDGE DESIGN SPECIFICATIONS AS AMENDED
   NHDOT 2010 STANDARD SPECIFICATIONS FOR ROAD & BRIDGE CONSTRUCTION AS AMENDED
   WELDING PER AASHTO/AWS D1.5-10
4. FOUNDATION DATA: ABUTMENTS - SPREAD FOOTING SUPPORTED ON STEEL H-PILES DRIVEN TO BEDROCK
   PIERS- SPREAD FOOTING SUPPORTED ON DRILLED SHAFTS WITH ROCK SOCKETS
5. STEEL H-PILES: AASHTO M270, GRADE 50 (ASTM A 709, GRADE 50)
6. REINFORCING STEEL: AASHTO M31 (ASTM A615) GRADE 60
   ALL DECK, APPROACH SLAB AND TOP OF BACKWALL REINFORCEMENT SHALL BE EPOXY COATED.
7. STRUCTURAL STEEL: AASHTO M270, GRADE 50W (ASTM A709, GRADE 50W), UNPAINTED, UNLESS NOTED OTHERWISE.
8. CONCRETE:
   DECK SLAB, BRUSH CURB, SIDEWALKS, WINGWALL COPINGS, LIGHT PEDESTALS, AND ABUTMENTS BACKWALLS:
   4,000 PSI, ITEM 520.70026, CONCRETE BRIDGE DECK (PANEL OPTION) (QC/QA) (F)
   ABUTMENT STEMS, WINGWALL STEMS, SIDEWALK RETAINING WALL STEM, AND PIER WALLS:
   3,000 PSI, ITEM 520.12, CONCRETE CLASS A, ABOVE FOOTINGS (F)
   ABUTMENT, WINGWALL, PIER FOOTINGS, SIDEWALK RETAINING WALL FOOTING, PCM RETAINING WALL MASS BLOCK AND SCOUR SLAB (PIER 2):
   3,000 PSI, ITEM 520.213, CONCRETE CLASS B, FOOTINGS (ON SOIL)(F)
   DRILLED SHAFTS AND ROCK SOCKETS:
   5,000 PSI, ITEM 509.2, CONCRETE CLASS AAA (MODIFIED)
   TREMIE SEAL (FOUNDATION SEAL @ PIER 1):
   3,000 PSI, ITEM 520.6, CONCRETE CLASS T, FOUNDATION SEAL
   APPROACH SLABS:
   4,000 PSI, ITEM 520.0302, CONCRETE CLASS AA, APPROACH SLABS (QC/QA) (F)
9. SEISMIC: PEAK GROUND ACCELERATION (PGA)= 0.085
   SITE CLASS = C (PIER 1, PIER 2, & ABUTMENT B)
   SITE CLASS = D (ABUTMENT A)
   ZONE= 1

GENERAL NOTES

1. EXISTING PLANS MAY BE VIEWED AT THE NHDOT BUREAU OF BRIDGE DESIGN OFFICE DURING THE BIDDING PROCESS. AFTER THE CONTRACT HAS BEEN AWARDED, A COMPLETE SET OF EXISTING PLANS WILL BE FORWARDED TO THE CONTRACTOR UPON REQUEST.

   EXISTING (1936) BRIDGE STRUCTURES ARE LOCATED IN FILE 1-10-2-1.
   REHABILITATED (1975) BRIDGE STRUCTURES ARE LOCATED IN FILE 1-10-2-1.
   EXISTING TEMPORARY BRIDGE STRUCTURES ARE LOCATED IN FILE 1-10-6-1.
2. THE CONTRACTOR SHALL FIELD VERIFY ALL DIMENSIONS AND ELEVATIONS OF THE EXISTING STRUCTURES AND SHALL BE PREPARED TO MAKE ANY ADJUSTMENTS REQUIRED TO PROPERLY COMPLETE THE CONSTRUCTION OF PROPOSED STRUCTURES.
3. THE CONTRACTOR SHALL TAKE ALL NECESSARY MEASURES TO ENSURE THAT DEBRIS DOES NOT FALL INTO THE WATERWAY BELOW THE EXISTING, TEMPORARY, AND PROPOSED STRUCTURES. ALL COSTS, INCLUDING ERECTION, MAINTENANCE AND REMOVAL OF TEMPORARY STRUCTURES, OR OTHER SUCH APPROVED METHODS, SHALL BE SUBSIDIARY TO THE APPROPRIATE ITEMS OF WORK BEING PERFORMED.
4. ALL EXISTING BRONZE DISCS REPRESENTING STATE BENCHMARKS OR SURVEY TRIANGULATION POINTS SHALL NOT BE DISTURBED. IF THE WORK CALLED FOR INVOLVES DISTURBING A BRONZE DISC, THE CONTRACTOR SHALL NOTIFY THE ENGINEER SUFFICIENTLY IN ADVANCE OF THE WORK TO PERMIT THE STATE TO TEMPORARILY RELOCATE THE EFFECTED MARKER.
5. EXTREME CARE SHALL BE TAKEN NOT TO DAMAGE PORTIONS OF THE EXISTING TEMPORARY BRIDGE AND ATTENDANT SUPPORT STRUCTURES. ANY DAMAGE SHALL BE REPORTED IMMEDIATELY TO THE NHDOT BUREAU OF BRIDGE DESIGN AND REPAIRED AT THE CONTRACTOR'S EXPENSE.
6. THE CONTRACTOR HAS THE OPTION TO USE PRECAST PRESTRESSED CONCRETE DECK PANELS.
7. FOR DECK SLAB ELEVATIONS, SEE BRIDGE SHEET 45. FOR ELEVATION ADJUSTMENTS AT THE BOTTOM OF THE SLAB FOR THE PANEL FORM OPTION, SEE BRIDGE SHEET 47.
8. SHEAR KEYS SHALL BE 3" HIGH BY ONE-THIRD THE THICKNESS OF THE WALL, CENTERED, UNLESS NOTED OTHERWISE.
9. FOR SURVEY LAYOUT SEE BRIDGE SHEET 5.
10. FOR BORING NOTES SEE BRIDGE SHEET 7.
11. FOR ELASTOMERIC BEARING ASSEMBLY NOTES SEE BRIDGE SHEET 57.
12. FOR FIXED BRIDGE SHOE NOTES SEE BRIDGE SHEET 57.
13. FOR EXPANSION JOINT (ITEM 560.101) NOTES, SEE BRIDGE SHEETS 52 & 53.
14. FOR EXPANSION JOINT (ITEM 561.301) NOTES, SEE BRIDGE SHEETS 49, 50, & 51.
15. FOR HYDRAULIC DATA SEE BRIDGE SHEET 1.

MISCELLANEOUS NOTES

1. A NEW WATER LINE SHALL BE INSTALLED ON THE BRIDGE. SEE BRIDGE SHEETS 18, 26, 37, & 40 FOR DETAILS.
2. TELEPHONE CONDUIT WILL BE INSTALLED BY OTHERS ON THE BRIDGE. SEE BRIDGE SHEETS 18, 26, 37, & 41 FOR DETAILS.
3. THE EXISTING TEMPORARY BRIDGE SHALL BE REMOVED AND PARTIALLY SALVAGED TO NHDOT HIGHWAY DISTRICT 2 UPON TRANSFER OF TRAFFIC TO THE COMPLETED BRIDGE. SEE PROSECUTION OF WORK FOR MORE INFORMATION.

MAINTENANCE OF TRAFFIC NOTES

1. TRAFFIC WILL BE MAINTAINED ON THE EXISTING TEMPORARY BRIDGE WHILE THE NEW BRIDGE IS CONSTRUCTED.

REINFORCEMENT NOTES

1. REINFORCEMENT IN THE BOTTOM OF FOOTINGS AND BOTTOM OF APPROACH SLABS SHALL HAVE 3" MINIMUM CLEAR COVER. ALL OTHER REINFORCEMENT SHALL HAVE $2^1/_2$" MINIMUM CLEAR COVER, UNLESS OTHERWISE NOTED.
2. PLACE REINFORCING STEEL TO AVOID WEEPERS, RAIL POST ANCHOR ASSEMBLIES, H-PILES, ANCHOR BOLTS, AND EXPANSION JOINT STEEL.
3. ANY EPOXY COATED REBAR CUT TO FIT SHALL BE TOUCHED UP WITH AN APPROVED EPOXY COATING MATERIAL. ALL COSTS SHALL BE INCLUDED IN ITEM 544.2.
4. REINFORCING LEGEND: SP = SPACE, SPL = SPLICE, FS = FAR SIDE, NS = NEAR SIDE, BOT = BOTTOM, ALT = ALTERNATING, DOW = DOWEL.
5. REINFORCING BAR MARKS APPENDED WITH AN "E" INDICATE EPOXY COATED BARS.

STRUCTURAL STEEL AND SUPERSTRUCTURE NOTES

1. ALL STRUCTURAL STEEL SHALL BE PAID UNDER ITEM 550.1, STRUCTURAL STEEL (F), INCLUDING THE GIRDERS, CROSS FRAMES, GUSSET PLATES, FILL PLATES, CONNECTION PLATES, SPLICE PLATES, STIFFENERS, AND FASTENERS.
2. THE NHDOT WILL INSPECT THE SHOP FABRICATION OF THE STRUCTURAL STEEL.
3. NOTCH TOUGHNESS REQUIREMENTS OF NHDOT STANDARD SPECIFICATIONS SHALL APPLY TO THE WEB AND FLANGES OF GIRDERS AND SPLICE PLATES.
4. ALL BOLTED CONNECTIONS SHALL BE SLIP-CRITICAL (CLASS-B) MADE WITH $^7/_8$" Φ HIGH STRENGTH BOLTS IN $^{15}/_{16}$" Φ HOLES. ALL FASTENERS SHALL CONFORM TO REQUIREMENTS FOR AASHTO M164 (ASTM A325) TYPE 3. (IN PAINTED AREAS BOLTS SHALL BE TYPE 1 GALVANIZED)
5. DIRECT TENSION INDICATORS SHALL BE INSTALLED WITH HIGH STRENGTH BOLTS.
6. GIRDERS SHALL BE CAMBERED FOR VERTICAL CURVATURE AND TO FULL DEAD LOAD DEFLECTION ACCORDING TO BR SHT 38. THE CAMBER SHALL BE ACHIEVED BY CUTTING THE WEB PLATE ACCORDING TO DIMENSIONS SHOWN ON THE GIRDER WEB LAYOUT ON BRIDGE SHEET 39. CAMBER TOLERANCE IS + $^3/_4$", -0 PER SHIPPING PIECE AND +$1^1/_2$", -0" PER SPAN.
7. HAUNCHED GIRDERS SHALL BE FABRICATED PER THE PARABOLIC CURVE FORMULAS DEFINED ON THE GIRDER DETAIL SHEET (BRIDGE SHEET 39). AT PIER LOCATIONS, A KINK WHERE THE END OF THE PARABOLA JOINS THE END OF THE ARC IS PERMISSABLE (SEE TYPICAL WEB HAUNCH DETAIL, BRIDGE SHEET 43).
8. BEARING STIFFENERS AND ENDS OF THE GIRDERS SHALL BE VERTICAL UNDER FULL DEAD LOAD DEFLECTION.
9. ALL WELDS SHALL HAVE CORROSION RESISTANCE AND WEATHERING APPEARANCE AS SPECIFIED FOR WEATHERING STRUCTURAL STEEL.
10. THE STRUCTURAL STEEL FABRICATOR SHALL ARRANGE FOR NON-DESTRUCTIVE TESTING OF THE WELDS. ALL COSTS TO BE INCLUDED IN ITEM 550.1.
11. SHOP DRAWINGS SHALL INDICATE THE METHOD AND SEQUENCE TO BE FOLLOWED IN WELDING THE GIRDER COMPONENTS.
12. CROSS FRAMES SHALL BE FABRICATED IN THE SHOP WITH $^1/_4$" FILLET WELDS, UNLESS NOTED OTHERWISE. GRAVITY AXES OF THE MEMBERS SHALL INTERSECT AS NEARLY AS PRACTICABLE AT THE CENTERLINE OF THE GIRDER FOR CONNECTIONS AT GIRDERS, OR AT THE POINT OF INTERSECTION OF ALL CONNECTED PIECES FOR CONNECTIONS NOT AT GIRDERS.
13. LOCATION OF WELDED SHOP SPLICES SHALL BE APPROVED BY THE BUREAU OF BRIDGE DESIGN. WEB SPLICES SHALL BE LOCATED A MINIMUM OF 9" FROM WELDED FLANGE SPLICES. WEB AND FLANGE SPLICES SHALL BE LOCATED A MINIMUM OF 6" FROM TRANSVERSE STIFFENERS OR CONNECTION PLATES.
14. HOLES FOR FIELD SPLICES SHALL BE DRILLED IN THE SHOP WHILE GIRDERS ARE ASSEMBLED TO FINAL BEARING ELEVATIONS.
15. ANY SHOP OR FIELD WELDING OF ATTACHMENTS TO ANY PORTION OF THE PLATE GIRDERS FOR CONSTRUCTION PURPOSES WILL NOT BE PERMITTED, UNLESS APPROVED BY THE BUREAU OF BRIDGE DESIGN.
16. THE CONTRACTOR SHALL SUBMIT A HANDLING AND ERECTION PROCEDURE TO THE ENGINEER PRIOR TO HANDLING THE STRUCTURAL STEEL IN ACCORDANCE WITH SECTION 550.3.14 AND 550.3.15. THE ERECTION PROCEDURE SHALL INDICATE THE LOCATION AND NUMBER OF LIFTING POINTS AS DETERMINED BY CHECKING THE L/B RATIOS IN ACCORDANCE WITH SECTION 550.3.14.2.4 TO GUARD AGAINST LATERAL BUCKLING OF THE GIRDERS. THESE DRAWINGS SHALL BE "RECIEVED FOR DOCUMENTATION" BEFORE ERECTION STARTS.
17. STEEL ERECTION SHALL NOT BE PERMITTED UNTIL THE ABUTMENTS HAVE BEEN BACKFILLED TO THE LEVEL OF THE BRIDGE SEATS.
18. ALL SHEAR CONNECTORS SHALL BE FIELD WELDED TO THE TOP FLANGE WITH AUTOMATICALLY TIMED STUD WELDING EQUIPMENT. RELOCATE SHEAR CONNECTORS AT SPLICE LOCATIONS TO AVOID INTERFERENCE WITH FASTENERS.
19. SCREED RAIL SUPPORTS REQUIRED FOR PLACEMENT OF THE DECK SLAB CONCRETE SHALL BE LOCATED AT THE CENTERLINE OF GIRDERS.
20. THE BRIDGE DECK POURING SEQUENCE SHALL BE AS SHOWN ON THE PLANS. ALL BRIDGE DECK CONCRETE POURED DURING A PARTICULAR PHASE OF THE SEQUENCE SHALL REMAIN PLASTIC THROUGHOUT THE ENTIRE POURING SEQUENCE.
21. ALL WELDING AND FABRICATION SHALL BE PERFORMED IN CONFORMANCE WITH THE AASHTO/AWS D1.5-10 BRIDGE WELDING CODE, (INCLUDING ALL REVISIONS PUBLISHED BY AASHTO AS OF THE BID OPENING DATE) AND NHDOT STANDARD SPECIFICATIONS FOR ROAD AND BRIDGE CONSTRUCTION.
22. ALL STRUCTURAL STEEL, INCLUDING BRIDGE SHOES, WITHIN 10 FEET OF THE CENTERLINE OF BEARING SHALL BE PAINTED, EXCEPT FASCIA SURFACES OF THE EXTERIOR GIRDERS (BOTTOM OF THE TOP FLANGE, WEB AND TOP AND EDGE OF THE BOTTOM FLANGE) SHALL NOT BE PAINTED.
23. THE TOP OF THE TOP FLANGE SHALL BE PAINTED WITH A LIGHT RUST PROTECTIVE COAT OF PRIMER, WHEREVER THE WEB AND BOTTOM FLANGE ARE PAINTED (FULL LENGTH FOR PAINTED GIRDERS) (FIRST AND LAST 10 FEET OF WEATHERING STEEL). COST INCLUDED IN ITEM 550.1, STRUCTURAL STEEL (F).
24. TWO 3" Φ CONDUITS SHALL BE INSTALLED IN EACH SIDEWALK. CONDUITS SHALL BE PLACED TO THE LIMITS SHOWN ON THE PLANS. SEE BRIDGE SHEET 58. ALL COSTS PAID UNDER ITEM 564.1 AND ITEM 564.51.
25. DIAPHRAGM COMPONENTS BETWEEN GIRDERS 5 AND 6, TEMPORARILY REMOVED AFTER INITIAL ERECTION TO FACILITATE THE PLACEMENT OF THE EXISTING TELEPHONE CONDUITS IN THEIR FINAL POSITION, SHALL BE RESET WITH NEW HIGH STRENGTH BOLTS AND DTI WASHERS. COST FOR REMOVING AND RE-SETTING DIAPHRAGMS AND NEW MATERIALS SHALL BE PAID UNDER ITEM 550.53. REMOVE AND RESET STRUCTURAL STEEL. SEE POW AND SPECIAL PROVISION 550.53 FOR ADDITIONAL INFORMATION.

CONCRETE NOTES

1. ALL EXPOSED EDGES OF CONCRETE SHALL BE CHAMFERED $^3/_4$", UNLESS OTHERWISE NOTED.

ABUTMENT AND WINGWALL NOTES

1. ITEM 534.3, WATER REPELLENT (SILANE-SILOXANE), SHALL BE APPLIED TO ALL EXPOSED CONCRETE SURFACES OF ABUTMENTS (INCLUDING BRIDGE SEATS), WINGS, AND BACKWALLS TO 1'-0" BELOW FILL LINES.
2. ITEM 538.2, BARRIER MEMBRANE, PEEL AND STICK - VERTICAL SURFACES (F), 2' WIDE, SHALL BE PLACED CENTERED OVER THE BEARING SEAT CONSTRUCTION JOINT AND PLACED CENTERED OVER ALL VERTICAL CONSTRUCTION JOINTS.
3. CONCRETE CLASS AA APPROACH SLABS (QC/QA) (F), ITEM 520.0302, SHALL BE FORMED INTO 1'x 7" BLOCKS ON THE APPROACH SLAB SEAT (ABUTMENT A) OR 1'x 1'-4" BLOCKS ON THE CURB SEATS (ABUTMENT B) TO SUPPORT THE APPROACH CURBS. (QC/QA TESTING REQUIREMENT WAIVED).
4. WEEPERS SHALL BE PLACED SYMMETRICALLY 10'-0" APART AND CENTERED AT 12" ABOVE THE TOP OF FOOTINGS. WEEPERS SHALL BE 4" Φ AND SLOPED TO DRAIN WITH A 12:1 SLOPE. ALL COSTS SHALL BE SUBSIDIARY TO ITEM 520.12.
5. ITEM 585.21, STONE FILL, CLASS B (BRIDGE), SHALL BE 2'-0" THICK, UNLESS OTHERWISE NOTED.
6. A BLOCKOUT SHALL BE PROVIDED IN THE ABUTMENT BACKWALLS, BETWEEN GIRDERS 4 AND 5, TO ALLOW FOR THE INSTALLATION OF A WATERLINE. SEE BRIDGE SHEET 17, 18, 25, & 26 FOR DETAILS.
7. FORM LINERS ARE REQUIRED AT PIER 1, PIER 2 AND ABUTMENT B. SEE APPLICABLE MASONRY SHEETS FOR TYPE, LAYOUT AND LIMITS.

ABUTMENT PILE NOTES

1. FURNISHING AND DRIVING STEEL H-PILES SHALL BE PAID UNDER ITEM 510.61, FURNISHING & DRIVING STEEL BEARING PILES.
2. MAXIMUM FACTORED PILE LOAD: ABUTMENT A - 87 TONS PER PILE
   ABUTMENT B - 92 TONS PER PILE
3. STEEL H-PILES SHALL CONFORM TO 510.2.1.2 AND SHALL BE HP12x53.
4. CAST STEEL DRIVING POINTS SHALL BE REQUIRED FOR ALL PILES AND SHALL BE PAID UNDER ITEM 510.65.
5. THE PILES SHALL BE DRIVEN IN ACCORDANCE WITH SECTION 510 TO A NOMINAL GEOTECHNICAL RESISTANCE EQUAL TO THE MAXIMUM FACTORED LOAD DIVIDED BY A RESISTANCE FACTOR OF 0.65. THE DEPARTMENT WILL CONDUCT PILE DYNAMIC ANALYZER (PDA) TESTS IN ACCORDANCE WITH SECTION 510 TO VERIFY THE NOMINAL GEOTECHNICAL RESISTANCE AND THE ACCEPTABILITY OF THE CONTRACTOR'S DRIVING SYSTEM.
6. ESTIMATED VERTICAL PILE LENGTHS:
   ABUTMENT A (NORTHERN HALF - 7 BATTERED PILES AND 4 VERTICAL PILES):
   80 FEET VERT. AND BATTERED
   ABUTMENT A (SOUTHERN HALF - 8 BATTERED PILES AND 3 VERTICAL PILES):
   60 FEET VERT, 65 FEET BATTERED
   ABUTMENT B:
   30 FEET VERTICAL AND BATTERED
7. SPLICES WILL BE PAID AS ONE SPLICE PER PILE FOR PILES WITH AN ESTIMATED LENGTH GREATER THAN 60 FEET AND FOR PILES WITH AN INSTALLED LENGTH THAT EXCEEDS THE ESTIMATED LENGTH. ALL OTHER SPLICES ARE SUBJECT TO APPROVAL AND WILL NOT BE PAID UNLESS ORDERED. APPROVED SPLICES WILL BE PAID UNDER ITEM 510.9, PILE SPLICES.
8. PILE LAYOUT DIMENSIONS ARE GIVEN AT THE BOTTOM OF ABUTMENT AND WINGWALL FOOTINGS.
9. PLACE REINFORCING STEEL TO CLEAR PILES.

PIER NOTES

1. THE CONTRACTOR IS REQUIRED TO POUR ALL PIER CONCRETE, EXCEPT FOR THE FOUNDATION SEAL (PIER 1 TREMIE SEAL), IN THE DRY.
2. AT PIER 2 THE CONTRACTOR SHALL CONSTRUCT A SCOUR SLAB BETWEEN THE FOOTING AND THE COFFERDAM SHEETPILING. COFFERDAM SHEETS SHALL BE CUT-OFF TO THE PLAN ELEVATION INDICATED. THE REMAINING PORTION OF THE SHEETS SHALL BE LEFT-IN-PLACE. ALL COSTS ASSOCIATED WITH THE FURNISHING AND PLACING OF CONCRETE FOR THE SCOUR SLAB SHALL BE INCLUDED IN ITEM 520.213. REINFORCING FOR THE SCOUR SLAB SHALL BE INCLUDED IN ITEM 544., STUDDED SHEAR CONNECTORS SHALL BE SUBSIDIARY TO ITEM 503.301
3. COAT VERTICAL SURFACES OF THE PIERS ABOVE THE FOOTING WITH ITEM 534.3, WATER REPELLENT (SILANE-SILOXANE).
4. COAT HORIZONTAL SURFACES OF THE PIERS ABOVE THE FOOTING WITH ITEM 536.11, EPOXY COATING FOR CONCRETE
5. ONE HORIZONTAL CONSTRUCTION JOINT IN EACH PIER STEM IS ALLOWED IF REQUIRED BY THE COFFERDAM DESIGN. CONSTRUCTION JOINTS, IF USED, SHALL BE CO-LOCATED WITH HORIZONTAL RUSTICATION LINE.
6. AT PIER 2, BEDROCK IS EXPECTED ABOVE THE BOTTOM OF STRUCTURAL FILL GRADE WITHIN THE EASTERN PORTION OF THE FOOTING AND SCOUR SLAB. BEDROCK SHALL BE REMOVED AT PIER 2 WITHIN THE PAY LIMITS INDICATED IN THE PLANS THROUGH ITEM 504.25, ROCK EXCAVATION (MECHANICAL METHODS).

STATE OF NEW HAMPSHIRE
DEPARTMENT OF TRANSPORTATION * BUREAU OF BRIDGE DESIGN

TOWN LEBANON, NH - HARTFORD, VT | BRIDGE NO. 058\128 | STATE PROJECT 14957
LOCATION US ROUTE 4 over CONNECTICUT RIVER

NOTES

SUBDIRECTORY	REVISIONS AFTER PROPOSAL	BY	DATE		BY	DATE	BRIDGE SHEET 2 OF 71
BRC\BRSITE		DESIGNED JWP	12/11	CHECKED	WPS	3/13	FILE NUMBER
.DGN LOCATOR		DRAWN SMG	12/11	CHECKED	JWP	2/13	110-6-1
14957Notes		QUANTITIES ---	---	CHECKED	---	---	
SHEET SCALE		ISSUE DATE	FEDERAL PROJECT NO.		SHEET NO.		TOTAL SHEETS
AS NOTED		REV. DATE	----------		27		157

PIER DRILLED SHAFT NOTES

1. REFER TO THE DRILLED SHAFTS SECTION 509 SPECIAL PROVISION FOR CONSTRUCTION REQUIREMENTS FOR THE INSTALLATION OF THE DRILLED SHAFTS.
2. THE CONTRACTOR SHALL SUBMIT A DRILLED SHAFT INSTALLATION PLAN FOR REVIEW AND APPROVAL A MINIMUM OF 4 WEEKS IN ADVANCE OF BEGINNING THE DRILLED SHAFT WORK, AS NOTED IN THE SPECIAL PROVISION.
3. THE MINIMUM ROCK SOCKET LENGTH MEASURED FROM THE BOTTOM OF THE PERMANENT STEEL CASING TO BOTTOM OF ROCK SOCKET SHALL BE 15 FEET. LONGER ROCK SOCKET LENGTHS SHALL BE AS DIRECTED. THE TOP OF ROCK SOCKET ELEVATIONS INDICATED IN THE PLANS ARE ESTIMATES ONLY. THE AS-DRILLED TOP OF ROCK SOCKET AND THE ROCK SOCKET LENGTH AT EACH DRILLED SHAFT SHALL BE APPROVED BY THE ENGINEER IN CONJUNCTION WITH THE NHDOT GEOTECHNICAL SECTION.
4. DRILLING OF OBSTRUCTIONS AS DEFINED IN SECTION 509 AND ANY BEDROCK ABOVE THE FINAL TIP ELEVATION OF THE PERMANENT CASING SHALL BE PAID UNDER ITEM 509.3, OBSTRUCTION REMOVAL. DRILLING OF THE ROCK SOCKET BELOW THE TIP OF THE PERMANENT CASING SHALL BE PAID UNDER ITEM 509.4, ROCK SOCKET EXCAVATION.
5. CROSSHOLE SONIC LOGGING (CSL) TESTING WILL BE CONDUCTED BY THE NHDOT GEOTECHNICAL SECTION. ITEM 509.5 SHALL BE USED ONLY AS DIRECTED, IF THE GEOTECHNICAL SECTION IS NOT AVAILABLE TO PROVIDE THE CSL TESTING, OR IF SEPERATE CSL TESTING IS CONSIDERED NECESSARY FOR THE DRILLED SHAFT WITH QUESTIONABLE RESULTS.
6. THE ESTIMATED QUANTITY FOR ITEM 509.62, DRILLED SHAFT REINFORCING STEEL, IS BASED ON THE ORDERED DRILLED SHAFT REINFORCING CAGE LENGTH THAT IS PROVIDED IN THE TABLE ON THE DRILLED SHAFT SHEET. THE ORDERED LENGTH ACCOUNTS FOR SOME VARIABILITY IN THE BEDROCK SURFACE. THE TOTAL ORDERED QUANTITY OF STEEL REINFORCING INCLUDING ANY PORTIONS OF THE REINFORCING CAGE THAT ARE CUTOFF WILL BE PAID SUBSIDIARY TO 509.62.
7. THE CONTRACTOR IS RESPONSIBLE FOR ORDERING AND INSTALLING A SUFFICIENT LENGTH OF PERMANENT CASING THAT ACCOUNTS FOR THE UNCERTAINTY AND VARIATION OF THE BEDROCK SURFACE INCLUDING BEDROCK EXCAVATED AT PIER 2 UNDER ITEM 504.25. THE DEPTH OF CASING EMBEDMENT INTO THE BEDROCK SURFACE THAT IS NECESSARY TO PROVIDE AN ACCEPTABLE SEAL FOR CONCRETE PLACEMENT AND THE ELEVATION OF THE DRILLED SHAFT WORK SURFACE SELECTED BY THE CONTRACTOR. THE PERMANENT CASING INCLUDING CUTOFFS SHALL BE SUBSIDIARY TO ITEM 509.2.
8. THE MAXIMUM FACTORED AXIAL DESIGN LOAD PER DRILLED SHAFT IS 1077 TONS.

ACCESS FOR BRIDGE CONSTRUCTION

1. ITEM 500.02, ACCESS FOR BRIDGE CONSTRUCTION, SHALL CONSIST OF THE DESIGN, CONSTRUCTION, MAINTENANCE AND REMOVAL OF THE TEMPORARY ACCESS BY THE CONTRACTOR. SEE SPECIAL PROVISION FOR ADDITIONAL INFORMATION.
2. TEMPORARY FILLS SHALL BE CLEAN STONE AND SHALL BE CONTAINED WITHIN WETLAND IMPACT AREAS SHOWN ON THE WETLAND PERMIT AND WITHIN EASEMENTS SHOWN ON THE SITE PLAN. A GEOTEXTILE FABRIC SHALL BE PLACED UNDER ALL TEMPORARY FILLS TO MINIMIZE DISRUPTION OF THE NATIVE SOILS AND VEGETATION. ALL COSTS TO BE SUBSIDIARY TO ITEM 500.02.

BRIDGE REMOVAL NOTES

1. THE CONTRACTOR'S METHOD FOR REMOVAL OF THE EXISTING BRIDGE SHALL BE SUBMITTED FOR DOCUMENTATION IN ACCORDANCE WITH SECTION 105.02, PRIOR TO THE COMMENCEMENT OF ANY REMOVAL OPERATIONS.
2. ITEM 502.1009, REMOVAL OF EXISTING BRIDGE STRUCTURE (PARTIAL SALVAGE TO NHDOT) SHALL PERTAIN TO THE EXISTING TEMPORARY BRIDGE AND SHALL INCLUDE: THE DISASSEMBLY, PACKAGING AND SALVAGE TRANSPORT OF THE STEEL SUPERSTRUCTURE AND DESIGNATED PIER SUBSTRUCTURE COMPONENTS TO SITES DESIGNATED IN THE PROSECUTION OF WORK AND COMPLETE REMOVAL AND DISPOSAL OF ALL OTHER COMPONENTS NOT DESIGNATED FOR SALVAGE BY OTHERS.
3. ITEM 502.101, REMOVAL OF EXISTING BRIDGE STRUCTURE, SHALL PERTAIN TO THE EXISTING PERMANENT BRIDGE AND SHALL INCLUDE THE REMOVAL OF THE ENTIRE SUPERSTRUCTURE (EXCLUDING THE BITUMINOUS CONCRETE OVERLAY AND BARRIER MEMBRANE), REMOVAL OF THE ABUTMENTS TO A MINIMUM OF 2' BELOW THE PROPOSED FINISHED GRADE, REMOVAL OF PIER 1 TO THE HIGHER OF ELEVATION 324.5 OR THE BOTTOM OF FOOTING ELEVATION, AND REMOVAL OF PIER 2 IN ITS ENTIRETY. THE GRANITE BLOCKS FROM THE PIERS AND ABUTMENTS SHALL BE SALVAGED TO THE CITY OF LEBANON, NH. SEE PROSECUTION OF WORK FOR ADDITIONAL INFORMATION. TRANSPORT COST FOR SALVAGED MATERIALS SHALL BE SUBSIDIARY TO ITEM 502.101. SEE ALSO BRIDGE REMOVAL NOTE 6.
4. ITEM 1009.32, REMOVAL AND DISPOSAL OF ASBESTOS CONTAINING MATERIAL (ACM) SHALL INCLUDE THE REMOVAL AND DISPOSAL OF THE BITUMINOUS CONCRETE OVERLAY AND BARRIER MEMBRANE ON THE EXISTING PERMANENT BRIDGE. SEE PROSECUTION OF WORK FOR ADDITIONAL INFORMATION. ALL REMOVAL AND DISPOSAL WORK SHALL BE PERFORMED IN ACCORDANCE WITH SPECIAL PROVISION NUMBERS 697.23, 502.1012, AND 1009.32.
5. THE CONTRACTOR IS ADVISED THAT EXISTING AERIAL POWER, CABLE, AND TELEPHONE LINES WILL REMAIN IN PLACE UNTIL EACH UTILITY HAS FINISHED THEIR RELOCATION EFFORTS. ITEMS 502.1009 AND 502.101 SHALL BE BID ACCORDINGLY. SEE THE UTILITIES SECTION OF THE PROSECUTION OF WORK FOR ADDITIONAL INFORMATION.
6. PIER 1 OF THE EXISTING PERMANENT BRIDGE SHALL BE REMOVED IN 2 PHASES. PHASE 1 SHALL INCLUDE REMOVAL FROM THE TOP OF THE PIER DOWN TO A POINT THAT IS ONE FULL COURSE OF STONE ABOVE THE LOCATION WHERE THE BRACING FOR THE EXISTING TEMPORARY BRIDGE PIER IS CONNECTED. PHASE 2 SHALL INCLUDE REMOVAL OF THE REMAINDER OF THE PIER TO THE REMOVAL LIMIT ESTABLISHED BY BRIDGE REMOVAL NOTE 3 ABOVE. PHASE 2 SHALL NOT BE ALLOWED TO PROCEED UNTIL THE SUPERSTRUCTURE ON THE EXISTING TEMPORARY BRIDGE HAS BEEN REMOVED. THE STEEL SHEETING AROUND THIS PIER FOOTING MAY BE ENTIRELY REMOVED OR CUT OFF AND LEFT-IN-PLACE AT THE REMOVAL LIMIT ESTABLISHED BY BRIDGE REMOVAL NOTE 3.
7. THE BRACE CONNECTION AT PIER 1 OF THE EXISTING PERMANENT BRIDGE SHALL BE JOINTLY INSPECTED BY THE ENGINEER AND CONTRACTOR AS FOLLOWS:

   A) IMMEDIATELY PRIOR TO COMMENCEMENT OF OPERATIONS TO REMOVE THE EXISTING PERMANENT BRIDGE.
   B) IMMEDIATELY AFTER THE COMPLETION OF PHASE 1 DEMOLITION OF PIER 1 (SEE BRIDGE REMOVAL NOTE 6) AND
   C) MONTHLY OR AS DIRECTED BY THE ENGINEER

   IF DURING ANY OF THE INSPECTIONS, THE ENGINEER JUDGES THE CONNECTION TO BE COMPROMISED, THE CONTRACTOR SHALL EMPLOY THE SERVICES OF A PROFESSIONAL ENGINEER LICENSED IN THE STATE OF NH TO DESIGN A RETROFIT CONNECTION. THE COST OF ALL INSPECTIONS SHALL BE SUBSIDIARY TO 502.101. COST OF ENGINEERING SERVICES, MATERIALS AND LABOR SHALL BE PAID AS FOLLOWS:

   A) ITEM 1002.1 IF AT TIME OF INITIAL INSPECTION.
   B) AT THE CONTRACTORS EXPENSE UNLESS OTHERWISE DIRECTED BY THE ENGINEER AT ALL OTHER TIMES.

COFFERDAM NOTES

1. THE COFFERDAM ITEMS SHALL BE PAID AS FOLLOWS: ABUTMENT A (ITEM 503.201); PIER 1 (ITEM 503.202); PIER 2 (ITEM 503.301); ABUTMENT B (ITEM 503.203).
2. ALL ITEMS COVERED UNDER SECTION 503 OF THE SPECIFICATIONS SHALL BE DESIGNED BY A PROFESSTIONAL ENGINEER LICENSED IN THE STATE IN WHICH THE COFFERDAM IS PLACED. THE CONTRACTOR SHALL SUBMIT STAMPED WORKING DRAWINGS AND CALCULATIONS FOR REVIEW IN ACCORDANCE WITH SECTION 105.02. ITEMS 503.201 AND 503.203 SHALL BE SUBMITTED FOR DOCUMENTATION. ITEMS 503.202 AND 503.301 SHALL BE SUBMITTED FOR APPROVAL. THE SUBMITTALS SHALL INCLUDE THE PROPOSED METHOD OF DEWATERING AND THE METHOD FOR DISPOSAL OF WATER PUMPED FROM THE EXCAVATIONS.
3. THE COFFERDAMS SHALL INCLUDE ALL WORK ASSOCIATED WITH TEMPORARY SUPPORT AND PROTECTION OF THE FOUNDATIONS FOR THE EXISTING BRIDGES, AND ALL DEWATERING COSTS IN ACCORDANCE WITH SECTIONS 503 AND 504.
4. THE COFFERDAM LIMITS SHOWN ON THE PLANS FOR ITEMS 503.201 AND 503.203 ARE APPROXIMATE AND SHALL BE ADJUSTED AS NECESSARY TO SUIT THE CONTRACTOR'S METHOD OF CONTRUCTION. THE COFFERDAM LIMITS SHOWN FOR ITEMS 503.202 AND 503.301 REFLECT MINIMUMS TO PROVIDE SUFFICIENT ROOM FOR THE SUBSTRUTURE CONFIGURATION INDICATED ON THE PLANS INCLUDING THE PIER 2 SCOUR SLAB. ANY ALTERATIONS TO THE DIMENSIONS SHOWN TO SUIT THE CONTRACTOR'S METHOD OF CONTRUCTION, SHALL BE CHECKED FOR CONFORMANCE WITH THE WETLAND PERMIT. ADDITIONAL COST FOR MATERIALS OR PERMITS ASSOCIATED WITH A CHANGE TO THE DIMENSIONS SHALL BE THE CONTRACTORS RESPONSIBILITY.
5. THE PIER 1 COFFERDAM (ITEM 503.202) SHALL BE DESIGNED BY THE CONTRACTOR WITH STEEL SHEETING AND BRACING AND CONCRETE TREMIE SEAL TO PERMIT CONSTRUCTION OF THE PIER FOOTING AND STEM IN-THE-DRY. THE CONTRACTOR SHALL BE RESPONSIBLE FOR SELECTING THE COFFERDAM VENT ELEVATION AND FOR DESIGNING THE TREMIE SEAL THICKNESS WITH A MINIMUM SAFETY FACTOR OF 1.10 AGAINST FULL HYDRAULIC UPLIFT, AS MEASURED FROM THE BOTTOM OF SEAL GRADE TO THE CONTRACTORS SELECTED VENT ELEVATION. THE TREMIE SEAL SHALL HAVE A MINIMUM THICKNESS OF 4 FEET. THE TREMIE SEAL SHALL BE DESIGNED IN A MANNER THAT DOES NOT AFFECT THE INTEGRITY OR PERFORMANCE OF THE DRILLED SHAFTS. REFER TO THE SPECIAL PROVISIONS AMENDMENT TO SECTION 503 FOR ADDITIONAL REQUIREMENTS AND INFORMATION FOR THIS COFFERDAM.
6. THE PIER 2 COFFERDAM (ITEM 503.301) SHALL BE DESIGNED BY THE CONTRACTOR WITH STEEL SHEETING AND BRACING, AND INTERNAL DEWATERING SYSTEM TO PERMIT CONSTRUCTION OF THE PIER FOOTING, SCOUR SLAB AND PIER STEM IN-THE-DRY. THE SHEETING SHALL BE DRIVEN TO BEDROCK TO REDUCE THE POTENTIAL FOR WATER INFILTRATION INTO THE EXCAVATION, AND SHALL BE CUT-OFF AND LEFT IN PLACE AS DETAILED ON THE PLANS AS PART OF THE SCOUR SLAB CONSTRUCTION. THE CONTRACTOR SHALL BE RESPONSIBLE FOR SELECTING THE COFFERDAM VENT ELEVATION THAT IS USED FOR DESIGNING THE COFFERDAM SHEETING AND BRACING AND INTERNAL DEWATERING SYSTEM. A MINIMUM OF 12 INCHES OF STRUCTURAL FILL SHALL BE PROVIDED BELOW THE BOTTOM OF FOOTING TO ASSIST IN THE DEWATERING EFFORT. IF THE CONTRACTOR'S DEWATERING SYSTEM DESIGN REQUIRES A GREATER THICKNESS OF STRUCTURAL FILL, ALL COSTS FOR THE ADDITIONAL STRUCTURAL FILL INCLUDING EXCAVATION AND MATERIALS SHALL BE SUBSIDIARY TO ITEM 503.301. REFER TO THE SPECIAL PROVISION ADMENDMENT TO SECTION 503 FOR ADDITIONAL REQUIREMENTS AND INFORMATION FOR THIS COFFERDAM.
7. THE INCORPORATION OF CROSS BRACES AND OTHER COFFERDAM COMPONENTS WITHIN THE PIER FOOTING OR PIER STEM SHALL NOT BE PERMITTED FOR EITHER PIER COFFERDAM.
8. SEE POW FOR INFORMATION ON USGS, CONNECTICUT RIVER GAGING STATIONS AND WILDER DAM FLOW INFORMATION.

DEWATERING NOTES

1. UNLESS OTHERWISE NOTED, THE CONTRACTOR IS REQUIRED TO POUR ALL SUBSTRUCTURE CONCRETE IN THE DRY.
2. CONTROL OF WATER WITHIN THE EXCAVATIONS SHALL BE CONDUCTED IN ACCORDANCE WITH SECTION 503 AND PAID UNDER ITEMS 503.201, 503.202, AND 503.301 AND 503.203. WELL POINTS, SUMPS OR OTHER PUMPING AREAS SHALL BE LOCATED OUTSIDE THE FOOTING LIMITS AND PROPERLY FILTERED TO PREVENT PUMPING OF FINES.
3. DEWATERING AT THE ABUTMENTS SHALL BE CONTINUOUS UNTIL MASONRY IS BACKFILLED TO THE ELEVATION OF THE SURROUNDING WATER TABLE, UNLESS OTHERWISE DIRECTED.
4. ALL MEANS AND METHODS ASSOCIATED WITH HANDLING WATER DURING CONSTRUCTION OF FOUNDATIONS SHALL BE LOCATED WITHIN THE LIMITS OF WORK SHOWN ON THE WETLANDS PERMIT APPROVED FOR THE PROJECT.

PCM RETAINING WALL NOTES

1. FOR PCM RETAINING WALL NOTES, SEE BRIDGE SHEET 66.

SIDEWALK RETAINING WALL NOTES

1. ITEM 534.3, WATER REPELLENT (SILANE-SILOXANE), SHALL BE APPLIED TO ALL EXPOSED CONCRETE SURFACES OF SIDEWALK RETAINING WALL TO 1'-0" BELOW FILL LINES.
2. ITEM 538.2, BARRIER MEMBRANE, PEEL AND STICK - VERTICAL SURFACES (F), 2' WIDE, SHALL BE PLACED CENTERED OVER THE VERTICAL CONSTRUCTION JOINTS.
3. WEEPERS SHALL BE PLACED SYMMETRICALLY 10'-0" APART AND CENTERED AT 12" ABOVE THE TOP OF FOOTINGS. WEEPERS SHALL BE 4" Φ AND SLOPED TO DRAIN WITH A 12:1 SLOPE. ALL COSTS SHALL BE SUBSIDIARY TO ITEM 520.12.
4. FENCING (ROADWAY ITEM) SHALL BE INSTALLED ON TOP OF THE SIDEWALK RETAINING WALL AS SHOWN ON THE PLANS. AT POINT WHERE PROPOSED WALL CONNECTS TO EXISTING WALL, THE EXISTING FENCING SHALL BE CUT AND CONNECTED TO THE POST CLOSEST TO THE JOINT. COST ASSOCIATED WITH CONNECTING THE EXISTING FENCE TO THE PROPOSED FENCE POST SHALL BE SUBSIDIARY TO THE FENCING ITEM.

SUMMARY OF PCM WALL QUANTITIES

	ITEM NO.	ITEM DESCRIPTION	QUANTITY	UNIT
**	504.1	COMMON BRIDGE EXCAVATION (F)	370	CY
**	508.	STRUCTURAL FILL	53	CY
**	534.3	WATER REPELLENT (SILANE-SILOXANE)	7	GAL
	592.31	PRECAST CONCRETE MODULAR WALL (CRUSHED STONE (FINE GRADATION) = 460 CY)	1235	SF

SUMMARY OF BRIDGE QUANTITIES

	ITEM NO.	ITEM DESCRIPTION	QUANTITY	UNIT
	201.882	INVASIVE SPECIES CONTROL TYPE II	260	SY
**	203.37	SEGREGATING AND REHANDLING NON-CONTAMINATED SOIL	900	CY
	207.3	UNCLASSIFIED CHANNEL EXCAVATION	3200	CY
**	209.201	GRANULAR BACKFILL (BRIDGE) (F)	580	CY
	403.911	HOT BITUMINOUS BRIDGE PAVEMENT 1" BASE COURSE (F)	92	TON
	500.02	ACCESS FOR BRIDGE CONSTRUCTION	1	U
	501.1009	REMOVAL OF EXISTING BRIDGE STRUCTURE (PARTIAL SALVAGE TO NHDOT)	1	U
	501.81	MAINTENANCE OF EXISTING TEMPORARY BRIDGE	1	U
	502.101	REMOVAL OF EXISTING BRIDGE STRUCTURE	1	U
	503.201	COFFERDAMS (ABUTMENT A)	1	U
	503.202	COFFERDAM (PIER 1)	1	U
	503.203	COFFERDAM (ABUTMENT B)	1	U
	503.301	COFFERDAM WITH SHEETING LEFT IN PLACE (PIER 2)	1	U
**	504.1	COMMON BRIDGE EXCAVATION (F) (ABUTMENTS AND PIER 1)	1510	CY
	504.101	COMMON BRIDGE EXCAVATION (PIER 2)	250	CY
	504.2	ROCK BRIDGE EXCAVATION	150	CY
	504.25	ROCK BRIDGE EXCAVATION (MECHANICAL METHODS)	150	CY
**	508.	STRUCTURAL FILL	190	CY
	509.1	MOBILIZATION AND DEMOBILIZATION OF DRILLED SHAFT DRILLING EQUIPMENT	1	U
	509.2	DRILLED SHAFT	240	LF
	509.3	OBSTRUCTION REMOVAL	18	LF
	509.4	ROCK SOCKET EXCAVATION	90	LF
	509.5	CROSSHOLE SONIC LOGGING (CSL) TESTS	6	EA
	509.62	DRILLED SHAFT REINFORCING STEEL	68495	LB
	510.1	PILE DRIVING EQUIPMENT	1	U
	510.61	FURNISHING & DRIVING STEEL BEARING PILES	126670	LB
	510.65	DRIVING-POINTS FOR STEEL BEARING PILES	49	EA
	510.9	PILE SPLICES	27	EA
	520.0302	CONCRETE CLASS AA APPROACH SLABS (QC/QA) (F)	63	CY
**	520.12	CONCRETE CLASS A, ABOVE FOOTINGS (F)	820	CY
**	520.213	CONCRETE CLASS B, FOOTINGS (ON SOIL) (F)	615	CY
	520.305	FORM LINER FOR CONCRETE (F)	651	SY
	520.70026	CONCRETE BRIDGE DECK (QC/QA) (PANEL OPTION) (F)	890	CY
**	534.3	WATER REPELLENT (SILANE-SILOXANE)	135	GAL
	536.11	EPOXY COATING FOR CONCRETE (F)	418	SF
**	538.2	BARRIER MEMBRANE, PEEL AND STICK - VERTICAL SURFACES (F)	56	SY
	538.6	BARRIER MEMBRANE, HEAT WELDED - MACHINE METHOD (F)	1700	SY
	540.1	EPOXY-URETHANE WATER PROOFING OVERLAY FOR BRIDGE DECKS	1850	SY
	541.1	PVC WATERSTOPS, NH TYPE 1 (F)	33	LF
	541.4	PVC WATERSTOPS, NH TYPE 4 (F)	61	LF
	541.5	PVC WATERSTOPS, NH TYPE 5 (F)	49	LF
**	544.	REINFORCING STEEL (F)	112866	LB
	544.11	REINFORCING STEEL, MECHANICAL CONNECTOR (F)	1766	LB
**	544.2	REINFORCING STEEL, EPOXY COATED (F)	188592	LB
	544.7	SYNTHETIC FIBER REINFORCEMENT (F)	450	LB
	547.	SHEAR CONNECTORS (F)	7542	EA
	548.21	ELASTOMERIC BEARING ASSEMBLIES (F)	6	EA
	548.22	ELASTOMERIC BEARING ASSEMBLIES (F)	6	EA
	548.23	ELASTOMERIC BEARING ASSEMBLIES (F)	6	EA
	550.1	STRUCTURAL STEEL (F)	864800	LB
	550.2	BRIDGE SHOES (F)	6	EA
	550.53	REMOVE AND RESET STRUCTURAL STEEL	1	U
	560.101	PREFABRICATED COMPRESSION SEAL EXPANSION JOINT (F)	49	LF
	561.301	PREFABRICATED EXPANSION JOINT, FINGER JOINT (F)	49	LF
	562.1	SILICONE JOINT SEALANT (F)	75	LF
	563.739	BRIDGE RAIL F (3-BAR) (ANODIZED) (WITH BALUSTERS)	937	LF
	564.1	BRIDGE LIGHTING SYSTEM	1	U
	564.51	FIRE ALARM SYSTEM	1	U
	565.739	BRIDGE APPROACH RAIL F (3-BAR) (ANODIZED)	2	U
	565.7391	BRIDGE APPROACH RAIL F (3-BAR FULL HEIGHT) (ANODIZED)	143	LF
	565.7391	BRIDGE APPROACH RAIL F (3-BAR FULL HEIGHT) (ANODIZED) (WITH BALUSTERS)	143	LF
	585.21	STONE FILL, CLASS B (BRIDGE)	1295	CY
	585.4	STONE FILL, CLASS D	230	CY
	593.411	GEOTEXTILE: PERM. CONTROL CL. 1, NON-WOVEN	2200	SY
**	647.1	HUMUS	120	CY
	697.11	INVASIVE SPECIES CONTROL AND MANAGEMENT PLAN	1	U
	697.23	PROJECT HEALTH AND SAFETY PLAN (ASBESTOS CONTAINING MATERIAL)	1	U
**	699.	MISCELLANEOUS TEMPORARY EROSION AND SEDIMENT CONTROL	*	$
	1002.1	REPAIRS OR REPLACEMENTS AS NEEDED - BRIDGE STRUCTURES	*	$
	1009.32	REMOVAL AND DISPOSAL OF ASBESTOS CONTAINING MATERIAL (ACM)	*	$
	1010.41	QUALITY CONTROL QUALITY ASSURANCE (QC/QA) FOR CONCRETE	*	$

SUMMARY OF SIDEWALK RETAINING WALL QUANTITIES

	ITEM NO.	ITEM DESCRIPTION	QUANTITY	UNIT
**	206.1	COMMON STRUCTURE EXCAVATION	115	CY
**	209.201	GRANULAR BACKFILL (BRIDGE) (F)	50	CY
**	508.	STRUCTURAL FILL	26	CY
**	520.12	CONCRETE CLASS A, ABOVE FOOTINGS (F)	17	CY
**	520.213	CONCRETE CLASS B, FOOTINGS (ON SOIL) (F)	18	CY
**	534.3	WATER REPELLENT (SILANE-SILOXANE)	4	GAL
**	538.2	BARRIER MEMBRANE, PEEL AND STICK - VERTICAL SURFACES (F)	2	SY
	541.2	PVC WATERSTOPS, NH TYPE 2 (F)	7	LF
**	544.	REINFORCING STEEL (F)	2066	LB
**	544.2	REINFORCING STEEL, EPOXY COATED (F)	1415	LB

* NOT A BID ITEM
** NOT AN ITEM TOTAL

STATE OF NEW HAMPSHIRE
DEPARTMENT OF TRANSPORTATION * BUREAU OF BRIDGE DESIGN

TOWN LEBANON, NH - HARTFORD, VT | BRIDGE NO. 058\128 | STATE PROJECT 14957
LOCATION US ROUTE 4 over CONNECTICUT RIVER

NOTES AND QUANTITY BOX

SUBDIRECTORY	REVISIONS AFTER PROPOSAL		BY	DATE		BY	DATE
BRC\BRSITE		DESIGNED	JWP	12/11	CHECKED	WPS	3/13
.DGN LOCATOR		DRAWN	SMG	12/11	CHECKED	JWP	2/13
14957Notes		QUANTITIES	---	---	CHECKED	---	---
SHEET SCALE		ISSUE DATE		FEDERAL PROJECT NO.		SHEET NO.	
AS NOTED		REV. DATE		----------		28	

BRIDGE SHEET 3 OF 71
FILE NUMBER 110-6-1
TOTAL SHEETS 157

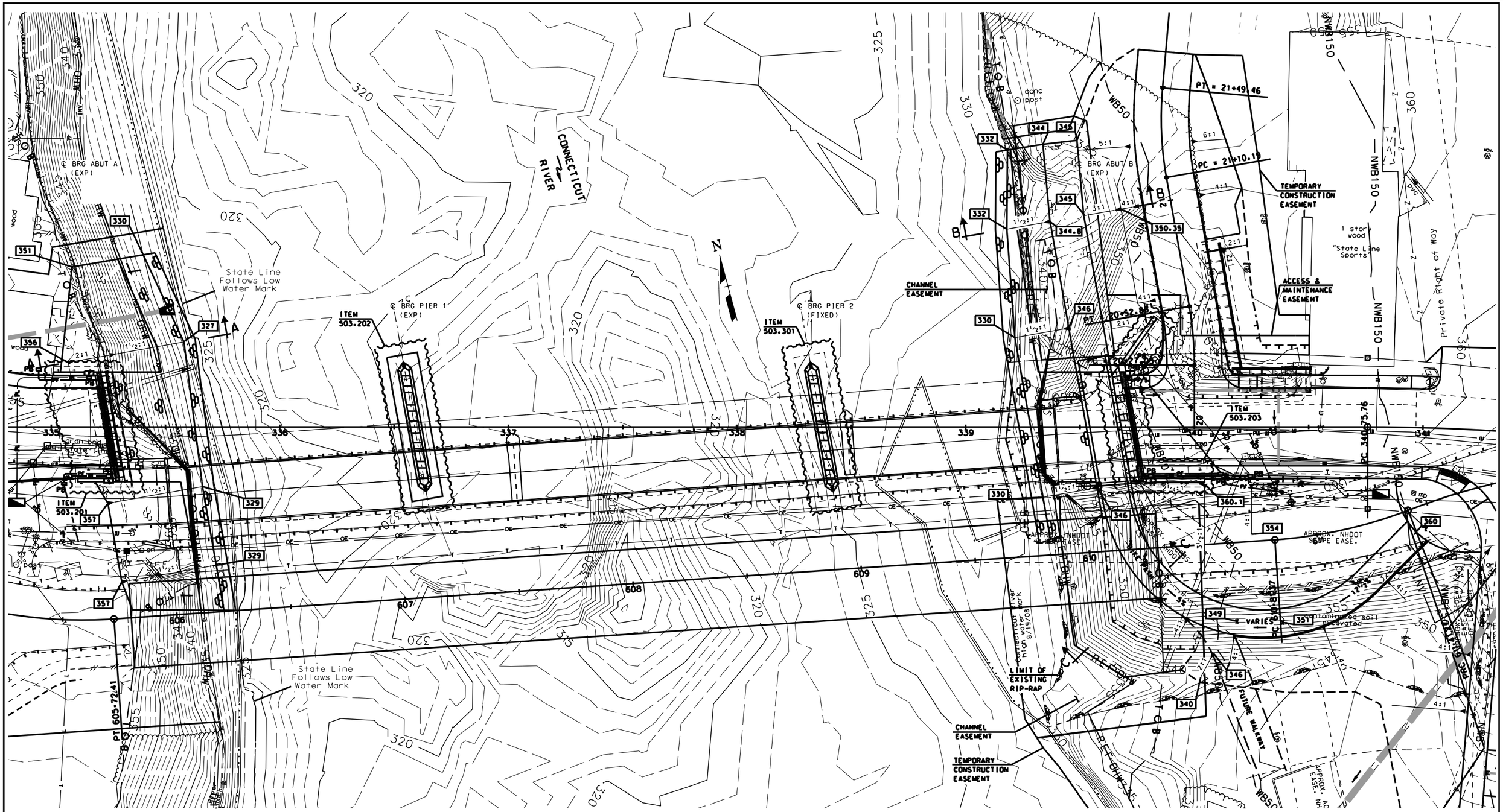

PLAN

SCALE: 1" = 20'-0"

FOR SECTIONS A-A. B-B. & C-C.
SEE BRIDGE SHEET 6.

SUBDIRECTORY	.DGN LOCATOR	SHEET SCALE
BRC/BRSITE	14957Siteplan	AS NOTED

STATE OF NEW HAMPSHIRE

DEPARTMENT OF TRANSPORTATION * BUREAU OF BRIDGE DESIGN

TOWN LEBANON, NH - HARTFORD, VT BRIDGE NO. 058\128 STATE PROJECT 14957

LOCATION US ROUTE 4 over CONNECTICUT RIVER

SITE PLAN

REVISIONS AFTER PROPOSAL		BY	DATE		BY	DATE
	DESIGNED	JWP	6/10	CHECKED	WPS	2/13
	DRAWN	SMG	6/10	CHECKED	JWP	2/13
	QUANTITIES	---	---	CHECKED	---	---

ISSUE DATE		FEDERAL PROJECT NO.	SHEET NO.	TOTAL SHEETS
REV. DATE		----------	29	157

BRIDGE SHEET 4 OF 71

FILE NUMBER 110-6-1

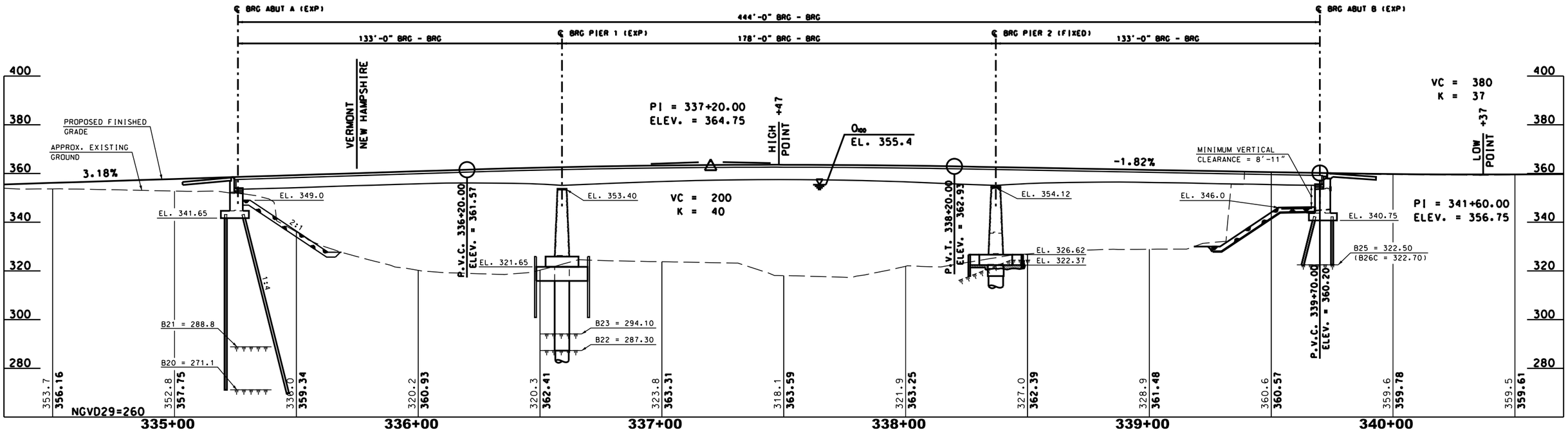

PROFILE

SCALE: 1" = 20'-0"

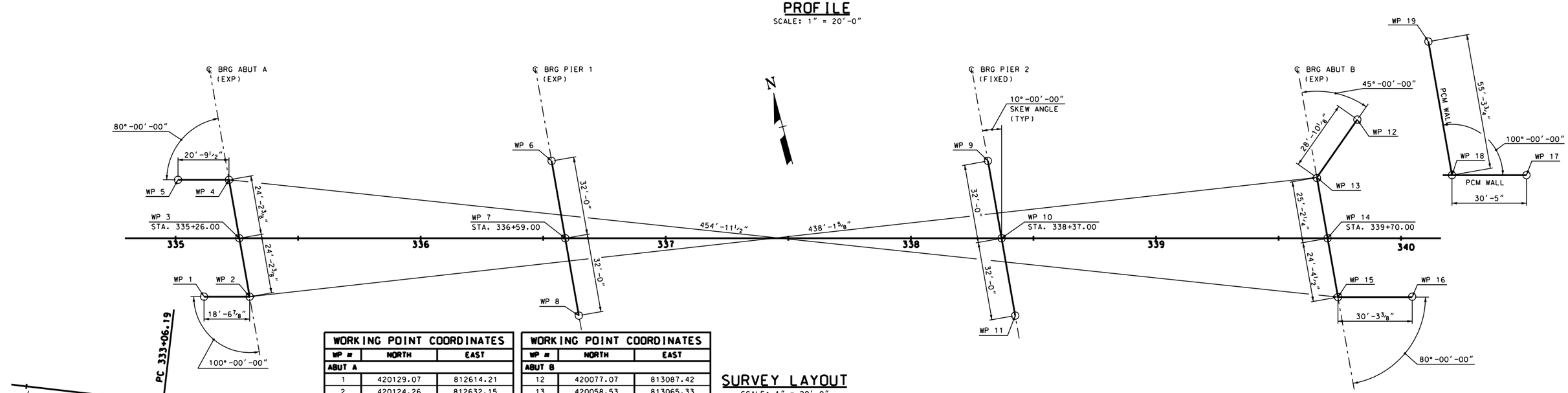

SURVEY LAYOUT

SCALE: 1" = 20'-0"

WORKING POINT COORDINATES		
WP #	NORTH	EAST
ABUT A		
1	420129.07	812614.21
2	420124.26	812632.15
3	420148.37	812634.26
4	420172.48	812636.37
5	420177.86	812616.29
PIER 1		
6	420145.82	812765.52
7	420113.94	812762.73
8	420082.06	812759.94
PIER 2		
9	420099.74	812937.45
10	420067.87	812934.66
11	420035.99	812931.87

WORKING POINT COORDINATES		
WP #	NORTH	EAST
ABUT B		
12	420077.07	813087.42
13	420058.53	813065.33
14	420033.44	813063.13
15	420009.16	813061.00
16	420001.31	813090.26
PCM WALL		
17	420037.30	813148.21
18	420045.17	813118.82
19	420100.27	813123.65
20	THIS WP INTENTIONALLY NOT USED	
RETAINING WALL		
21	420220.39	812366.97
22	420194.37	812414.85
23	420194.30	812414.81
24	420178.80	812444.51
25	420174.45	812457.29

STATE OF NEW HAMPSHIRE
DEPARTMENT OF TRANSPORTATION * BUREAU OF BRIDGE DESIGN

TOWN LEBANON, NH - HARTFORD, VT BRIDGE NO. 058\128 STATE PROJECT 14957

LOCATION US ROUTE 4 over CONNECTICUT RIVER

PROFILE AND SURVEY LAYOUT

REVISIONS AFTER PROPOSAL		BY	DATE		BY	DATE
	DESIGNED	JWP	12/11	CHECKED	MGL	2/13
	DRAWN	SMG/GMC	12/11	CHECKED	MGL	2/13
	QUANTITIES	---	---	CHECKED	---	---
	ISSUE DATE		FEDERAL PROJECT NO.		SHEET NO.	
	REV. DATE		----------		30	

BRIDGE SHEET 5 OF 71

FILE NUMBER 110-6-1

TOTAL SHEETS 157

SUBDIRECTORY	.DGN LOCATOR	SHEET SCALE
BRC\BRSITE	14957Profile	AS NOTED

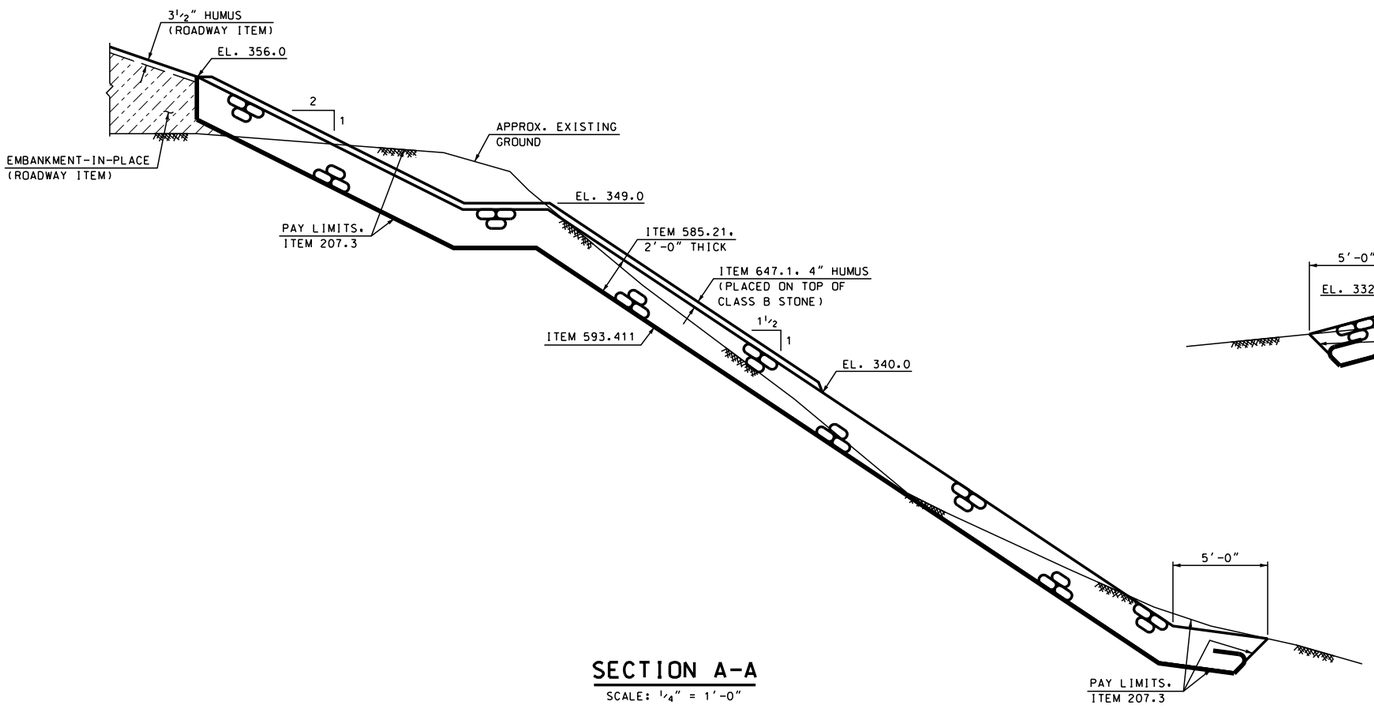

SECTION A-A

SCALE: ¼" = 1'-0"

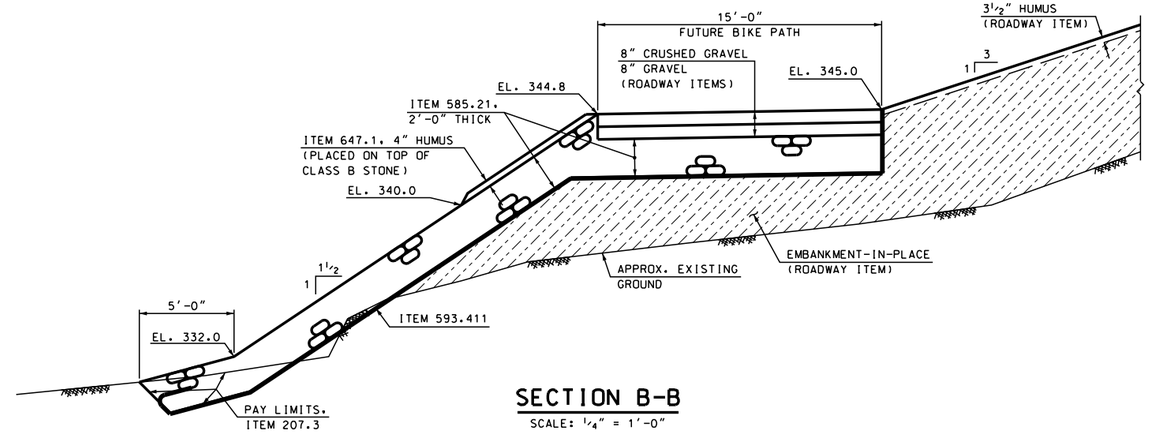

SECTION B-B

SCALE: ¼" = 1'-0"

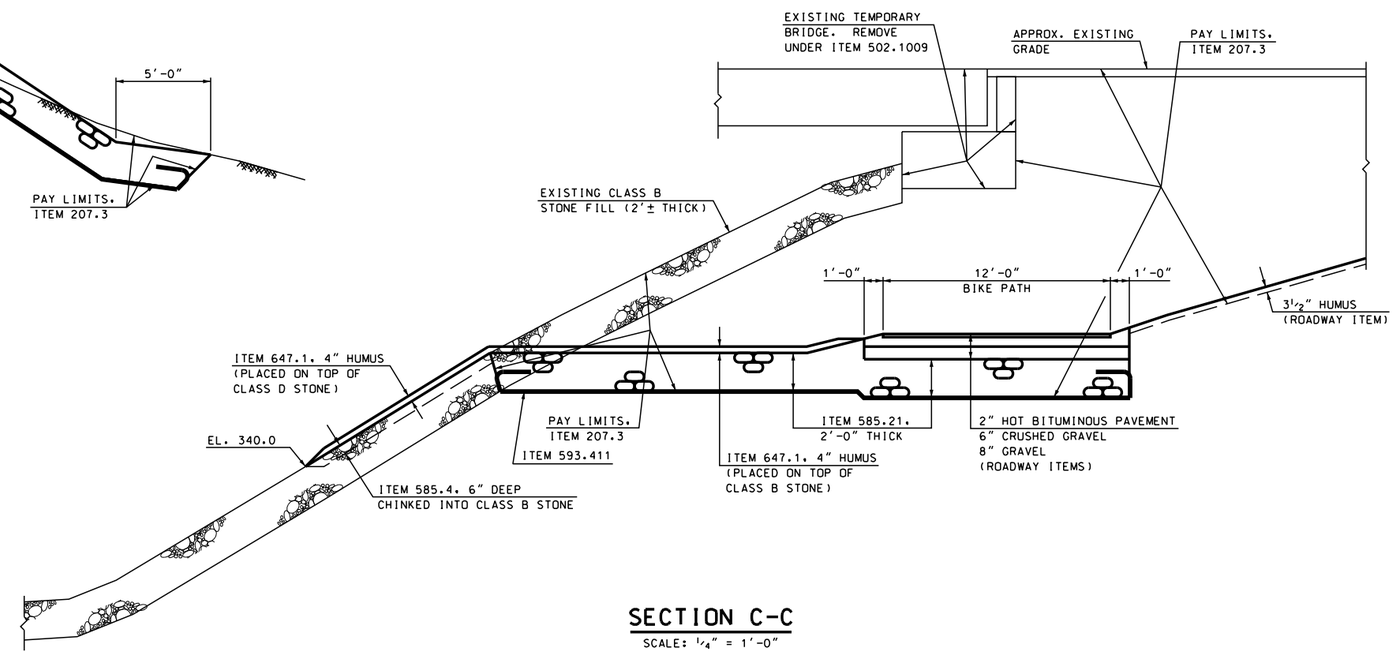

SECTION C-C

SCALE: ¼" = 1'-0"

NOTES

1. FOR LOCATIONS OF SECTIONS A-A, B-B, AND C-C SEE BRIDGE SHEET 4.
2. THE SURFACE OF THE CLASS B STONE FILL PLACED UNDER THIS PROJECT SHALL BE THOROUGHLY CHINKED WITH SPALLS PER 585.3.1 TO MINIMIZE THE INFILTRATION OF HUMUS INTO THE STONE FILL MASS AND BIKE PATH SELECT MATERIALS. THE PLACEMENT OF SPALLS AND CHINKING SHALLBE SUBSIDIARY TO ITEM 585.21. THE HUMUS QUANTITY WILL BE MEASURED PER SECTION 647.4.1.
3. AT LOCATIONS WHERE EXISTING CLASS B STONE FILL WILL BE RETAINED (e.g., SOUTH SIDE OF THE NH ABUTMENT), THE EXISTING STONE FILL SURFACE SHALL BE THOROUGHLY CHINKED WITH 6 INCHES OF CLASS D STONE FILL (ITEM 585.4). PRIOR TO PLACEMENT OF HUMUS. ITEM 585.4 SHALL BE MEASURED AND PAID PER CUBIC YARD USING THE NOMINAL DEPTH OF 6 INCHES OVER THE MEASURED AREA OF PLACEMENT ALONG THE SLOPE.

STATE OF NEW HAMPSHIRE
DEPARTMENT OF TRANSPORTATION * BUREAU OF BRIDGE DESIGN

TOWN LEBANON, NH - HARTFORD, VT BRIDGE NO. 058\128 STATE PROJECT 14957

LOCATION US ROUTE 4 over CONNECTICUT RIVER

CHANNEL SECTIONS

BRIDGE SHEET 6 OF 71

FILE NUMBER 110-6-1

REVISIONS AFTER PROPOSAL		BY	DATE		BY	DATE
	DESIGNED	JWP	6/12	CHECKED	WPS	2/13
	DRAWN	SMG	6/12	CHECKED	JWP	2/13
	QUANTITIES	JWP	2/13	CHECKED	PAB	2/13
	ISSUE DATE		FEDERAL PROJECT NO.		SHEET NO.	TOTAL SHEETS
	REV. DATE		----------		31	157

SUBDIRECTORY	.DGN LOCATOR	SHEET SCALE
BRC\BRSITE	14957ChanSect	AS NOTED

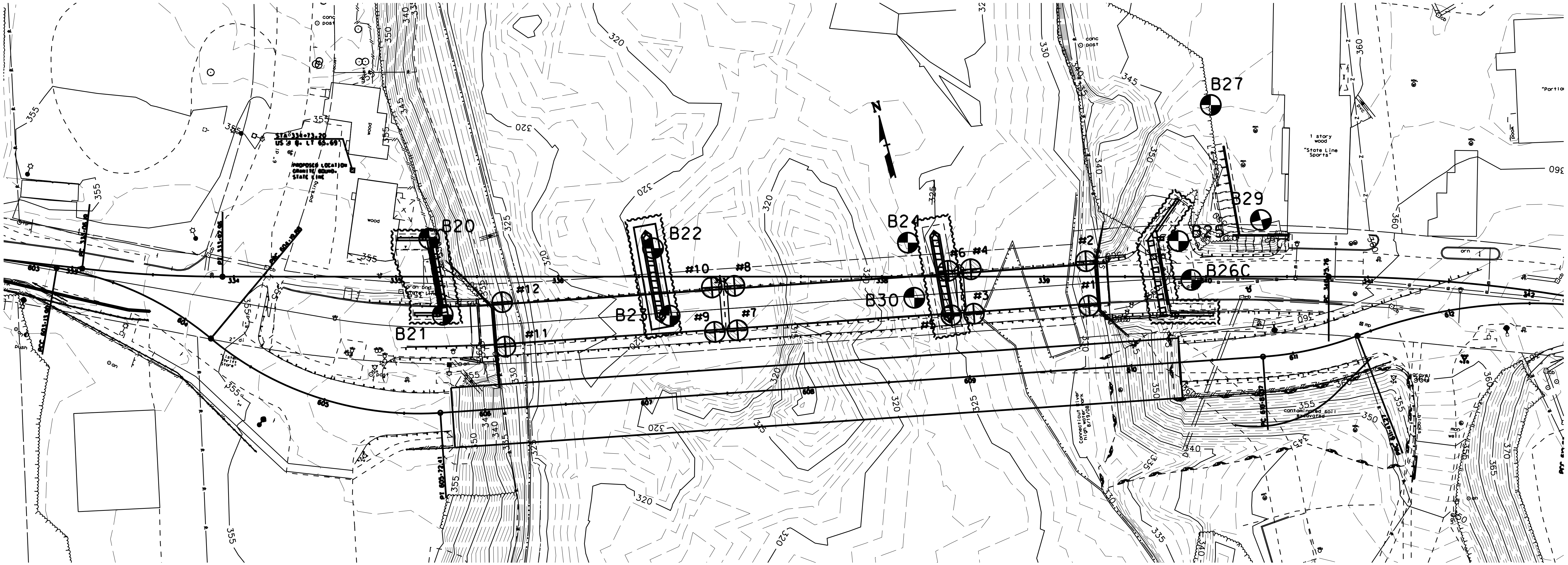

PLAN
SCALE: 1" = 30'-0"

BORING NOTES

1. BORINGS INDICATED THUS ◐ WERE DRILLED BY NORTHERN TEST BORINGS, INC. AND NHDOT. REFER TO THE TEST BORING LOGS FOR THE SPECIFIC DRILLER, DATES OF DRILLING AND SAMPLING EQUIPMENT.
2. BORINGS ARE FOR DESIGN PURPOSES SHOWING CONDITIONS AT BORING POINTS ONLY AND DO NOT NECESSARILY INDICATE MATERIAL TO BE ENCOUNTERED DURING CONSTRUCTION.
3. THE SOILS REPORT IS AVAILABLE IN THE NHDOT BUREAU OF MATERIALS AND RESEARCH OFFICE. SEE PROSECUTION OF WORK FOR MORE INFORMATION.
4. WATER LEVELS INDICATED THUS ▽ WERE MEASURED AT THE TIME OF EXPLORATION. THE WATER LEVELS ENCOUNTERED DURING CONSTRUCTION MAY VARY CONSIDERABLY DUE TO PREVAILING CLIMATE, RAINFALL, OR OTHER FACTORS.
5. BORINGS #1 THRU #12 INDICATED THUS ⊕ WERE MADE IN 1974. FOR BORING LOGS SEE EXISTING 1975 BRIDGE PLANS LOCATED IN FILE NO. 1-10-2-1 AND THE GEOTECHNICAL REPORT.

BORING LOCATIONS

NO.	STATION	OFFSET	NORTH	EAST
B20	335+20.56	23.5' LT	420172.5	812635.1
B21	335+28.87	23.5' RT	420124.9	812631.0
B22	336+59.00	18.0' LT	420131.0	812767.0
B23	336+69.00	24.0' RT	420088.2	812766.2
B24	338+16.00	21.0' LT	420093.6	812919.8
B25	339+83.00	22.0' LT	420051.3	813081.4
B26C	339+91.00	2.0' RT	420026.1	813082.9
B27	340+03.00	106.0' LT	420127.2	813122.5
B29	340+33.91	35.0' LT	420050.7	813133.9
B30	338+20.00	13.0' RT	420059.7	812914.9

SUBDIRECTORY	.DGN LOCATOR	SHEET SCALE
BRC/BRSITE	14957Borings	AS NOTED

STATE OF NEW HAMPSHIRE
DEPARTMENT OF TRANSPORTATION * BUREAU OF BRIDGE DESIGN

TOWN LEBANON, NH - HARTFORD, VT | BRIDGE NO. 058\128 | STATE PROJECT 14957
LOCATION US ROUTE 4 over CONNECTICUT RIVER

BRIDGE BORING LOCATION PLAN

REVISIONS AFTER PROPOSAL		BY	DATE		BY	DATE
	DESIGNED	NHDOT	---	CHECKED	JWP	2/11
	DRAWN	SMG	2/11	CHECKED	JWP	2/11
	QUANTITIES	---	---	CHECKED	---	---

BRIDGE SHEET 7 OF 71
FILE NUMBER 110-6-1

ISSUE DATE	FEDERAL PROJECT NO.	SHEET NO.	TOTAL SHEETS
REV. DATE	------------	32	157

ABUTMENT A

B20

TEST BORING REPORT
STATE OF NEW HAMPSHIRE DEPARTMENT OF TRANSPORTATION
MATERIALS & RESEARCH BUREAU – GEOTECHNICAL SECTION

PROJECT NAME LEBANON, NH – HARTFORD, VT 14957 BRIDGE NO. 058/128
DESCRIPTION US Route 4 over Connecticut River

BORING NO. B20
SHEET NO. 1 OF 2
STA. 335+21 OFF. LT 24
BASELINE NH Route 4 CL
ELEVATION (ft) 352.7
START/END 8/5/10 / 8/6/10
DRILLER Northern Test Boring
INSPECTOR John Soper
CLASSIFIER JKS
EAST/NORTH (ft) 812635/420172

GROUNDWATER					EQUIPMENT	SAMPLER	CASING	CORE
DATE	TIME	DEPTH (ft)	ELEV. (ft)	BOTTOM OF CASING	BOTTOM OF HOLE	TYPE:	S	NW	NX
8/6/10	12:00 pm	22.4	330.3	0	87.5	SIZE I.D. (in):	1.375	3	1.875
						HAMMER WT. (lb):	140	DRILL RIG	
						HAMMER FALL (in):	30		
						HAMMER TYPE:	Automatic	Diedrich D-50 Trac	

DEPTH (ft)	STRATUM CHANGE (ft) DEPTH	ELEVATION	BLOWS PER 0.5 ft	SAMPLE NUMBER	SAMPLER RECOVERY (ft) [%]	DEPTH RANGE (ft)	FIELD CLASSIFICATION AND REMARKS	STRATUM SYMBOL
0			3 2 2 1	S1	0.5 [25]	0.0 – 2.0	Loose, gray, silty FINE SAND	
							–ALLUVIUM–	
5			1 1 1 1	S2	1.8 [90]	5.0 – 7.0	Very loose, olive gray, fine sandy SILT, with parting of fine sand, trace silt	
TF 344								
10 BF 342			2 3 3 3	S3	1.7 [85]	10.0 – 12.0	Loose, olive gray, FINE SAND, some silt	
340								
338	14.5	338.2						
15			3 10 7 7	S4	0.5 [25]	15.0 – 17.0	Medium dense, dark olive gray, FINE SAND, some silt, trace medium and coarse sand	
336							–GLACIO-FLUVIAL–	
334								
20 332			5 5 6 7	S5	1.1 [55]	20.0 – 22.0	Medium dense, dark olive gray, FINE to MEDIUM SAND, little silt, trace coarse sand	
330								
328								
25 326			5 5 5 8	S6	1.2 [60]	25.0 – 27.0	Loose, dark olive gray, FINE and MEDIUM SAND, some coarse sand, little to trace silt, trace fine gravel	
324								
322								
320								
318								
316								

Sampler Identification		COHESIVE SOILS		NON-COHESIVE SOILS		Soil Descriptions	Proportion
S	Standard Split Spoon	Blows/foot	Consistency	Blows/foot	Density	Capitalized Soil Name	Major Component
SL	Large Spoon (O.D.= 3 in)	0 – 1	Very Soft	0 – 4	Very Loose	Lower Case Adjective	35% – 50%
T	Thin Wall Tube	2 – 4	Soft	5 – 10	Loose	Some	20% – 35%
U	Undisturbed Piston	5 – 8	Medium Stiff	11 – 24	Medium Dense	Little	10% – 20%
O	Open End Rod	9 – 15	Stiff	25 – 50	Dense	Trace	1% – 10%
A	Auger Flight	16 – 30	Very Stiff	> 50	Very Dense		
C	Core Barrel	31 – 60	Hard	WOR – Weight of Rod			
NR	Not Recorded	> 60	Very Hard	WOH – Weight of Hammer		ENGLISH	

B20

TEST BORING REPORT
STATE OF NEW HAMPSHIRE DEPARTMENT OF TRANSPORTATION
MATERIALS & RESEARCH BUREAU – GEOTECHNICAL SECTION

PROJECT NAME LEBANON, NH – HARTFORD, VT 14957 BRIDGE NO. 058/128
DESCRIPTION US Route 4 over Connecticut River

BORING NO. B20
SHEET NO. 2 OF 2
STA. 335+21 OFF. LT 24
BASELINE NH Route 4 CL
ELEVATION (ft) 352.7

DEPTH (ft)	STRATUM CHANGE (ft) DEPTH	ELEVATION	BLOWS PER 0.5 ft	SAMPLE NUMBER	SAMPLER RECOVERY (ft) [%]	DEPTH RANGE (ft)	FIELD CLASSIFICATION AND REMARKS	STRATUM SYMBOL
30			8 10 13 18	S7	0.7 [35]	30.0 – 32.0	Medium dense, dark olive gray, FINE SAND, some silt, little medium and coarse sand, little to trace fine gravel	
							–GLACIO-FLUVIAL–	
35			11 11 11 12	S8	0.8 [40]	35.0 – 37.0	Medium dense, similar to S7	
40			9 9 10 12	S9	0.9 [45]	40.0 – 42.0	Medium dense, dark gray, FINE and MEDIUM SAND, some coarse sand, little silt	
45			9 13 14 13	S10	1.1 [55]	45.0 – 47.0	Dense, gray, FINE SAND, little silt, trace medium sand, with a layer of dark gray, FINE and MEDIUM SAND, some coarse sand, trace silt, trace fine gravel	
50			8 10 15 15	S11	1.2 [60]	50.0 – 52.0	Dense, gray, FINE and MEDIUM SAND, trace silt, trace coarse sand, with occasional seam of silty FINE SAND	
55			6 9 10 12	S12	1.6 [80]	55.0 – 57.0	Medium dense, similar to S11	
60			11 14 30 18	S13	1.2 [60]	60.0 – 62.0	Dense, gray, FINE and MEDIUM SAND, trace silt, trace coarse sand, trace fine and coarse gravel, with occasional seam of silty FINE SAND	
65			14 15 20 18	S14	1.0 [50]	65.0 – 67.0	Dense, gray, FINE and MEDIUM SAND, some coarse sand, little to trace silt, trace fine gravel	
							–GLACIO-FLUVIAL–	
70			12 14 18 18	S15	0.0 [0]	70.0 – 72.0	Dense, no recovery, due to material washing out of the spoon	
75			10 11 15 21	S16	0.0 [0]	75.0 – 77.0	Dense, no recovery, due to material washing out of the spoon	
80	81.6	271.1	19 24 35 50/0.1	S17	1.2 [75]	80.0 – 81.6	Very dense, gray, FINE and MEDIUM SAND, some coarse sand, little to trace silt, trace fine and coarse gravel	
						81.6 – 82.0	–APPROXIMATE BEDROCK SURFACE–	
85				C1	4.1 [75]	82.0 – 87.5	Hard, very slightly weathered to fresh, extremely fractured to sound, fine and medium grained, gray, GNEISS. Foliation is moderately dipping. All fractures are opposite of foliation, smooth. RQD: 3.1 / 5.5 = 56%	
						87.5	Bottom of Exploration @ 87.5 ft (El. 265.2)	

B21

TEST BORING REPORT
STATE OF NEW HAMPSHIRE DEPARTMENT OF TRANSPORTATION
MATERIALS & RESEARCH BUREAU – GEOTECHNICAL SECTION

PROJECT NAME LEBANON, NH – HARTFORD, VT 14957 BRIDGE NO. 058/128
DESCRIPTION US Route 4 over Connecticut River

BORING NO. B21
SHEET NO. 1 OF 2
STA. 335+29 OFF. RT 24
BASELINE NH Route 4 CL
ELEVATION (ft) 358.9
START/END 8/4/10 / 8/5/10
DRILLER Northern Test Boring
INSPECTOR John Soper
CLASSIFIER JKS
EAST/NORTH (ft) 812631/420125

GROUNDWATER					EQUIPMENT	SAMPLER	CASING	CORE
DATE	TIME	DEPTH (ft)	ELEV. (ft)	BOTTOM OF CASING	BOTTOM OF HOLE	TYPE:	S	NW	NX
8/5/10	11:00 am	28.4	330.5	35	80.1	SIZE I.D. (in):	1.375	3	1.875
						HAMMER WT. (lb):	140	DRILL RIG	
						HAMMER FALL (in):	30		
						HAMMER TYPE:	Automatic	Diedrich D-50 Trac	

DEPTH (ft)	STRATUM CHANGE (ft) DEPTH	ELEVATION	BLOWS PER 0.5 ft	SAMPLE NUMBER	SAMPLER RECOVERY (ft) [%]	DEPTH RANGE (ft)	FIELD CLASSIFICATION AND REMARKS	STRATUM SYMBOL
0	0.3	358.6					–ASPHALT–	
	0.9	358.0					–CONCRETE–	
			22 23 29 23	S1	1.1 [55]	1.0 – 3.0	Very dense, gray, silty FINE SAND, little medium and coarse sand, little to trace fine gravel	
							–FILL–	
5			9 7 8 14	S2	1.0 [50]	5.0 – 7.0	Medium dense, olive gray, silty FINE SAND, some medium and coarse sand, little fine gravel	
10			8 10 10 7	S3	0.9 [45]	10.0 – 12.0	Medium dense, similar to S2	
TF 344								
15	14.5	344.4	3 3 4 3	S4	1.0 [50]	15.0 – 17.0	Loose, dark olive gray, silty FINE SAND	
BF 342								
							–ALLUVIUM–	
20			3 5 5 6	S5	1.1 [55]	20.0 – 22.0	Loose, dark olive gray, silty FINE SAND, with frequent partings and occasional seam of FINE SAND, little silt, with dark yellowish brown mottles	
25			3 4 5 4	S6	1.5 [75]	25.0 – 27.0	Loose, similar to S5	

Sampler Identification		COHESIVE SOILS		NON-COHESIVE SOILS		Soil Descriptions	Proportion
S	Standard Split Spoon	Blows/foot	Consistency	Blows/foot	Density	Capitalized Soil Name	Major Component
SL	Large Spoon (O.D.= 3 in)	0 – 1	Very Soft	0 – 4	Very Loose	Lower Case Adjective	35% – 50%
T	Thin Wall Tube	2 – 4	Soft	5 – 10	Loose	Some	20% – 35%
U	Undisturbed Piston	5 – 8	Medium Stiff	11 – 24	Medium Dense	Little	10% – 20%
O	Open End Rod	9 – 15	Stiff	25 – 50	Dense	Trace	1% – 10%
A	Auger Flight	16 – 30	Very Stiff	> 50	Very Dense		
C	Core Barrel	31 – 60	Hard	WOR – Weight of Rod			
NR	Not Recorded	> 60	Very Hard	WOH – Weight of Hammer		ENGLISH	

B21

TEST BORING REPORT
STATE OF NEW HAMPSHIRE DEPARTMENT OF TRANSPORTATION
MATERIALS & RESEARCH BUREAU – GEOTECHNICAL SECTION

PROJECT NAME LEBANON, NH – HARTFORD, VT 14957 BRIDGE NO. 058/128
DESCRIPTION US Route 4 over Connecticut River

BORING NO. B21
SHEET NO. 2 OF 2
STA. 335+29 OFF. RT 24
BASELINE NH Route 4 CL
ELEVATION (ft) 358.9

DEPTH (ft)	STRATUM CHANGE (ft) DEPTH	ELEVATION	BLOWS PER 0.5 ft	SAMPLE NUMBER	SAMPLER RECOVERY (ft) [%]	DEPTH RANGE (ft)	FIELD CLASSIFICATION AND REMARKS	STRATUM SYMBOL
	29.0	329.9						
30			12 14 15 17	S7	1.1 [55]	30.0 – 32.0	Dense, grayish brown, FINE SAND, some silt, little to trace medium and coarse s, trace fine gravel	
							–GLACIO-FLUVIAL–	
35			12 10 11 12	S8	1.2 [60]	35.0 – 37.0	Medium dense, olive gray, FINE and MEDIUM SAND, some silt, little to trace coarse sand	
40			10 10 12 10	S9	1.1 [55]	40.0 – 42.0	Medium dense, similar to S8	
45			9 11 10 9	S10	1.2 [60]	45.0 – 47.0	Medium dense, similar to S8	
50			9 12 12 17	S11	1.3 [65]	50.0 – 52.0	Medium dense, olive brown, FINE and MEDIUM SAND, little silt, little to trace coarse sand	
55			6 8 12 15	S12	1.7 [85]	55.0 – 57.0	Medium dense, dark olive gray, FINE to COARSE SAND, little silt, trace fine gravel	
60			12 14 18 14	S13	1.1 [55]	60.0 – 62.0	Dense, dark gray, FINE and MEDIUM SAND, little to trace silt, trace coarse sand	
65			13 11 18 28	S14	0.5 [25]	65.0 – 67.0	Dense, dark gray, FINE and MEDIUM SAND, little to trace silt, trace coarse sand, trace fine gravel	
							–GLACIO-FLUVIAL–	
70	70.1	288.8				70.1	–APPROXIMATE BEDROCK SURFACE–	
				C1	4.6 [84]	70.1 – 75.6	Hard, very slightly weathered to fresh, moderately to slightly fractured, medium grained, gray, GNEISS. Foliation is moderately dipping. Moderately dipping fracture, opposite to foliation at 72.3 feet. At 72.8 feet, 73.2 feet, steep angle fracture across foliation, smooth. All other fractures are along foliation. RQD: 3.1 / 5.5 = 56%	
75				C2	3.3 [73]	75.6 – 80.1	Hard, very slightly weathered to fresh, moderately to slightly fractured, medium grained, gray, GNEISS. Foliation is moderately dipping. All fractures along foliation. RQD: 2.1 / 4.5 = 47%	
80						80.1	Bottom of Exploration @ 80.1 ft (El. 278.8)	

TF = TOP OF FOOTING
BF = BOTTOM OF FOOTING

BORING LOGS
SCALE: 1/4" = 1'-0"

SUBDIRECTORY	.DGN LOCATOR	SHEET SCALE
BRC/BRSITE	14957BoringLog	AS NOTED

STATE OF NEW HAMPSHIRE
DEPARTMENT OF TRANSPORTATION * BUREAU OF BRIDGE DESIGN

TOWN LEBANON, NH - HARTFORD, VT BRIDGE NO. 058\128 STATE PROJECT 14957
LOCATION US ROUTE 4 over CONNECTICUT RIVER

BORING LOGS (1 OF 7)

REVISIONS AFTER PROPOSAL

	BY	DATE		BY	DATE
DESIGNED	NHDOT	---	CHECKED	NHDOT	---
DRAWN	SMG	2/11	CHECKED	JWP	2/11
QUANTITIES	---	---	CHECKED	---	---

ISSUE DATE
REV. DATE
FEDERAL PROJECT NO. ----------
SHEET NO. 33

BRIDGE SHEET 8 OF 71
FILE NUMBER 110-6-1
TOTAL SHEETS 157

PIER 1

B22

336 / 334 / 332 / 330 / 328 / 326 TF / 324 / 322 BF / 320 / 318 BS / 316 / 314 / 312 / 310 / 308 / 306 / 304 / 302 / 300 / 298 / 296 / 294 / 292

TEST BORING REPORT

STATE OF NEW HAMPSHIRE DEPARTMENT OF TRANSPORTATION
MATERIALS & RESEARCH BUREAU – GEOTECHNICAL SECTION

PROJECT NAME LEBANON, NH – HARTFORD, VT 14957 BRIDGE NO. 058/128
DESCRIPTION US Route 4 over Connecticut River

BORING NO. B22
SHEET NO. 1 OF 2
STA. 336+59 OFF. LT 18
BASELINE NH Route 4 CL
ELEVATION (ft) 326.4
START/END 7/2/11 / 7/2/11
DRILLER Northern Test Boring
INSPECTOR John Soper
CLASSIFIER JKS
EAST/NORTH (ft) 812767/420131

GROUNDWATER					
DATE	TIME	DEPTH (ft)	ELEV. (ft)	BOTTOM OF CASING	BOTTOM OF HOLE
7/2/11	7:00 am	0.0	326.4	0	0

EQUIPMENT	SAMPLER	CASING	CORE
TYPE:	S	NW	NX
SIZE I.D. (in):	1.375	3	1.875
HAMMER WT. (lb):	140	DRILL RIG	
HAMMER FALL (in):	30	Diedrich D-50 Track	
HAMMER TYPE:	Automatic		

DEPTH (ft)	STRATUM CHANGE (ft) DEPTH	ELEVATION	BLOWS PER 0.5 ft	SAMPLE NUMBER	SAMPLER RECOVERY (ft) [%]	DEPTH RANGE (ft)	FIELD CLASSIFICATION AND REMARKS	STRATUM SYMBOL
0							–WATER–	
5								
	7.1	319.3	2 2 2 3	S1	0.0 [0]	7.1 – 9.1	No recovery due to material washing out of spoon.	
10							–ALLUVIUM–	
15			2 3 4 6	S2	0.0 [0]	14.1 – 16.1	No recovery due to material washing out of spoon.	
20			3 3 3 4	S3	1.1 [55]	18.1 – 21.1	Loose, gray, FINE and MEDIUM SAND, little coarse sand, trace silt.	
25			2 2 3 5	S4	1.2 [60]	24.1 – 26.1	Loose, dark gray, FINE and MEDIUM SAND, little silt, trace coarse sand.	

Sampler	Identification
S	Standard Split Spoon
SL	Large Spoon (O.D.= 3 in)
T	Thin Wall Tube
U	Undisturbed Piston
O	Open End Rod
A	Auger Flight
C	Core Barrel
NR	Not Recorded

COHESIVE SOILS Blows/foot	Consistency
0 – 1	Very Soft
2 – 4	Soft
5 – 8	Medium Stiff
9 – 15	Stiff
16 – 30	Very Stiff
31 – 60	Hard
> 60	Very Hard

NON-COHESIVE SOILS Blows/foot	Density
0 – 4	Very Loose
5 – 10	Loose
11 – 24	Medium Dense
25 – 50	Dense
> 50	Very Dense
WOR – Weight of Rod	
WOH – Weight of Hammer	

Soil Descriptions	Proportion
Capitalized Soil Name	Major Component
Lower Case Adjective	35% – 50%
Some	20% – 35%
Little	10% – 20%
Trace	1% – 10%

ENGLISH

TEST BORING REPORT

STATE OF NEW HAMPSHIRE DEPARTMENT OF TRANSPORTATION
MATERIALS & RESEARCH BUREAU – GEOTECHNICAL SECTION

PROJECT NAME LEBANON, NH – HARTFORD, VT 14957 BRIDGE NO. 058/128
DESCRIPTION US Route 4 over Connecticut River

BORING NO. B22
SHEET NO. 2 OF 2
STA. 336+59 OFF. LT 18
BASELINE NH Route 4 CL
ELEVATION (ft) 326.4

30 / 35 / 40 / 45 / 50 / 55 / 60 / 65

DEPTH (ft)	STRATUM CHANGE (ft) DEPTH	ELEVATION	BLOWS PER 0.5 ft	SAMPLE NUMBER	SAMPLER RECOVERY (ft) [%]	DEPTH RANGE (ft)	FIELD CLASSIFICATION AND REMARKS	STRATUM SYMBOL
			2 2 2 3	S5	1.2 [60]	29.1 – 31.1	Very loose, dark gray, FINE and MEDIUM SAND, little silt, trace coarse sand.	
							–ALLUVIUM–	
			4 5 6 8	S6	0.9 [45]	34.1 – 36.1	Medium dense, dark gray, FINE and MEDIUM SAND, little coarse sand, trace silt, trace fine gravel.	
	39.1	287.3					–APPROXIMATE BEDROCK SURFACE–	
				C1	4.5 [94]	39.3 – 44.1	Hard, very slightly weathered to fresh, extremely to slightly fractured, medium grained, gray, GNEISS. Foliation is moderately dipping. At 37.7 and 40.3 feet, steep angle fracture across foliation, smooth. At 40.8 feet, moderately dipping fracture across foliation, smooth, little clay along fracture. At 41.5 and 41.9 feet, steep angle fracture, smooth, across foliation. All other fractures are along foliation. RQD: 2.1 / 4.8 = 44%	
				C2	4.5 [100]	44.1 – 48.6	Hard, sound, fresh, medium grained, gray, GNEISS. Foliation is moderately dipping. RQD: 4.3 / 4.5 = 96%	
				C3	4.5 [100]	48.6 – 53.1	Similar to C2. RQD: 4.5 / 4.5 = 100%	
				C4	5.0 [100]	53.1 – 58.1	Similar to C2 RQD: 4.9 / 5.0 = 98%	
				C5	5.0 [100]	58.1 – 63.1	Similar to C2. RQD: 5.0 / 5.0 = 100%	
							Bottom of Exploration @ 63.1 ft (El. 263.3)	

TF = TOP OF FOOTING
BF = BOTTOM OF FOOTING
BS = BOTTOM OF SEAL AT MINIMUM THICKNESS

BORING LOGS

SCALE: 1/4" = 1'-0"

STATE OF NEW HAMPSHIRE
DEPARTMENT OF TRANSPORTATION * BUREAU OF BRIDGE DESIGN

TOWN LEBANON, NH - HARTFORD, VT BRIDGE NO. 058\128 STATE PROJECT 14957
LOCATION US ROUTE 4 over CONNECTICUT RIVER

BORING LOGS (2 OF 7)

REVISIONS AFTER PROPOSAL		BY	DATE		BY	DATE
	DESIGNED	NHDOT	---	CHECKED	NHDOT	---
	DRAWN	SMG	2/11	CHECKED	JWP	2/11
	QUANTITIES	---	---	CHECKED	---	---

SUBDIRECTORY	.DGN LOCATOR	SHEET SCALE
BRC/BRSITE	14957BoringLog	AS NOTED

ISSUE DATE
REV. DATE

FEDERAL PROJECT NO. ----------

BRIDGE SHEET 9 OF 71
FILE NUMBER 110-6-1
SHEET NO. 34
TOTAL SHEETS 157

PIER 1

B23

372 370 368 366 364 362 360 358 356 354 352 350 348 346 344 342 340 338 336 334 332 330 328

TEST BORING REPORT

STATE OF NEW HAMPSHIRE DEPARTMENT OF TRANSPORTATION
MATERIALS & RESEARCH BUREAU – GEOTECHNICAL SECTION

PROJECT NAME LEBANON, NH – HARTFORD, VT 14957 BRIDGE NO. 058/128
DESCRIPTION US Route 4 over Connecticut River

BORING NO. B23
SHEET NO. 1 OF 3
STA. 336+69 OFF. RT 24
BASELINE NH Route 4 Cl
ELEVATION (ft) 362.2
START/END 8/9/10 / 8/10/10
DRILLER Northern Test Boring
INSPECTOR John Soper
CLASSIFIER JKS
EAST/NORTH (ft) 812766/420088

GROUNDWATER						EQUIPMENT	SAMPLER	CASING	CORE
DATE	TIME	DEPTH (ft)	ELEV (ft)	BOTTOM OF CASING	BOTTOM OF HOLE	TYPE:	S	NW	NX
8/10/10	8:00 am	33.0	329.2	69	89	SIZE I.D. (in):	1.375	3	1.875
						HAMMER WT. (lb):	140	DRILL RIG	
						HAMMER FALL (in):	30	Diedrich D-50 Truck	
						HAMMER TYPE:	Automatic		

DEPTH (ft)	STRATUM CHANGE (ft) DEPTH	ELEVATION	BLOWS PER 0.5 ft	SAMPLE NUMBER	SAMPLER RECOVERY (ft) [%]	DEPTH RANGE (ft)	FIELD CLASSIFICATION AND REMARKS	STRATUM SYMBOL
0	0.3	361.9					–ASPHALT–	
	1.0	361.2					–CONCRETE–	
5								
10								
15							–AIR–	
20								
25								

Sampler Identification	
S	Standard Split Spoon
SL	Large Spoon (O.D.= 3 in)
T	Thin Wall Tube
U	Undisturbed Piston
O	Open End Rod
A	Auger Flight
C	Core Barrel
NR	Not Recorded

COHESIVE SOILS Blows/foot	Consistency
0 – 1	Very Soft
2 – 4	Soft
5 – 8	Medium Stiff
9 – 15	Stiff
16 – 30	Very Stiff
31 – 60	Hard
> 60	Very Hard

NON-COHESIVE SOILS Blows/foot	Density
0 – 4	Very Loose
5 – 10	Loose
11 – 24	Medium Dense
25 – 50	Dense
> 50	Very Dense
WOR – Weight of Rod	
WOH – Weight of Hammer	

Soil Descriptions Capitalized Soil Name	Proportion Major Component
Lower Case Adjective	35% – 50%
Some	20% – 35%
Little	10% – 20%
Trace	1% – 10%

ENGLISH

TEST BORING REPORT

STATE OF NEW HAMPSHIRE DEPARTMENT OF TRANSPORTATION
MATERIALS & RESEARCH BUREAU – GEOTECHNICAL SECTION

PROJECT NAME LEBANON, NH – HARTFORD, VT 14957 BRIDGE NO. 058/128
DESCRIPTION US Route 4 over Connecticut River

BORING NO. B23
SHEET NO. 2 OF 3
STA. 336+69 OFF. RT 24
BASELINE NH Route 4 Cl
ELEVATION (ft) 362.2

	DEPTH (ft)	STRATUM CHANGE (ft) DEPTH	ELEVATION	BLOWS PER 0.5 ft	SAMPLE NUMBER	SAMPLER RECOVERY (ft) [%]	DEPTH RANGE (ft)	FIELD CLASSIFICATION AND REMARKS	STRATUM SYMBOL
	30							–AIR–	
		33.0	329.2						
	35							–WATER–	
TF		36.0	326.2	10 12 13 18	S1	1.0 [50]	36.0 – 38.0	Dense, gravelly SAND, some silt –FILL–	
BF	40				C1	1.8 [90]	39.0 – 41.0	Small boulder with cobbles and gravel	
		42.0	320.2						
BS	45			6 2 3 5	S2	1.1 [55]	43.0 – 45.0	Loose, dark olive gray, FINE and MEDIUM SAND, trace silt –ALLUVIUM–	
	50			7 7 8 7	S3	1.1 [55]	48.0 – 50.0	Medium dense, gray, FINE and MEDIUM SAND, trace silt, trace coarse sand	
	55			2 3 7 11	S4	1.3 [65]	53.5 – 55.5	Loose, gray, FINE and MEDIUM SAND, trace silt, trace coarse sand, with a layer of FINE to COARSE SAND, some fine gravel, trace silt	
	60			9 10 12 11	S5	0.5 [25]	58.0 – 60.0	Medium dense, similar to S4	
	65			9 11 13 14	S6	0.3 [15]	63.0 – 65.0	Medium dense, gray, FINE and MEDIUM SAND, little to trace silt	

TEST BORING REPORT

STATE OF NEW HAMPSHIRE DEPARTMENT OF TRANSPORTATION
MATERIALS & RESEARCH BUREAU – GEOTECHNICAL SECTION

PROJECT NAME LEBANON, NH – HARTFORD, VT 14957 BRIDGE NO. 058/128
DESCRIPTION US Route 4 over Connecticut River

BORING NO. B23
SHEET NO. 3 OF 3
STA. 336+69 OFF. RT 24
BASELINE NH Route 4 Cl
ELEVATION (ft) 362.2

DEPTH (ft)	STRATUM CHANGE (ft) DEPTH	ELEVATION	BLOWS PER 0.5 ft	SAMPLE NUMBER	SAMPLER RECOVERY (ft) [%]	DEPTH RANGE (ft)	FIELD CLASSIFICATION AND REMARKS	STRATUM SYMBOL
							–ALLUVIUM–	
	68.1	294.1					–APPROXIMATE BEDROCK SURFACE–	
70				C2	3.9 [78]	69.0 – 74.0	Hard, very slightly weathered to fresh, extremely to slightly fractured, fine and medium grained, gray, GNEISS. Foliation is steep angle to vertical. Vertical fracture along foliation at 69.5 to 69.9 feet. All other fractures are moderately dipping across foliation. RQD: 2.0 / 5.0 = 40%	
75				C3	4.7 [85]	74.0 – 79.5	Hard, very slightly weathered to fresh, extremely fractured to sound, medium and fine grained, gray, GNEISS. Foliation is moderately dipping to steep angle. All fractures are steep angle across opposite dip of foliation. RQD: 4.0 / 5.5 = 73%	
80				C4	5.0 [91]	79.5 – 85.0	Hard, fresh, sound, fine and medium grained, gray, GNEISS RQD: 4.9 / 5.5 = 89%	
85				C5	3.7 [74]	85.0 – 90.0	Hard, fresh, moderately fractured to sound, medium grained, gray, GNEISS RQD: 2.9 / 5.0 = 58%	
90							Bottom of Exploration @ 90.0 ft (El. 272.2)	
95								
100								

TF = TOP OF FOOTING
BF = BOTTOM OF FOOTING
BS = BOTTOM OF SEAL AT MINIMUM THICKNESS

BORING LOGS

SCALE: 1/4" = 1'-0"

STATE OF NEW HAMPSHIRE
DEPARTMENT OF TRANSPORTATION * BUREAU OF BRIDGE DESIGN

TOWN LEBANON, NH - HARTFORD, VT BRIDGE NO. 058\128 STATE PROJECT 14957
LOCATION US ROUTE 4 over CONNECTICUT RIVER

BORING LOGS (3 OF 7)

REVISIONS AFTER PROPOSAL		BY	DATE		BY	DATE
	DESIGNED	NHDOT	---	CHECKED	NHDOT	---
	DRAWN	SMG	2/11	CHECKED	JWP	2/11
	QUANTITIES	---	---	CHECKED	---	---
	ISSUE DATE		FEDERAL PROJECT NO.		SHEET NO.	
	REV. DATE		----------		35	

BRIDGE SHEET 10 OF 71
FILE NUMBER 110-6-1
TOTAL SHEETS 157

SUBDIRECTORY	.DGN LOCATOR	SHEET SCALE
BRC/BRSITE	14957BoringLog	AS NOTED

PIER 2

B24

TEST BORING REPORT

STATE OF NEW HAMPSHIRE DEPARTMENT OF TRANSPORTATION
MATERIALS & RESEARCH BUREAU – GEOTECHNICAL SECTION

PROJECT NAME LEBANON, NH – HARTFORD, VT 14957 BRIDGE NO. 058/128
DESCRIPTION US Route 4 over Connecticut River

BORING NO.	B24
SHEET NO.	1 OF 1
STA.	338+16 OFF. LT 21
BASELINE	NH Route 4 CL
ELEVATION (ft)	323.2
START/END	1/13/11 / 1/13/11
DRILLER	Northern Test Boring
INSPECTOR	John Soper
CLASSIFIER	JKS
EAST/NORTH (ft)	812920/420094

GROUNDWATER						EQUIPMENT	SAMPLER	CASING	CORE
DATE	TIME	DEPTH (ft)	ELEV. (ft)	BOTTOM OF CASING	BOTTOM OF HOLE	TYPE:	S	NW	NX
						SIZE I.D. (in):	1.375	4	1.875
						HAMMER WT. (lb):	140	DRILL RIG	
						HAMMER FALL (in):	30		
						HAMMER TYPE:	Automatic	Diedrick B-50 Truck	

DEPTH (ft)	STRATUM CHANGE (ft) DEPTH	ELEVATION	BLOWS PER 0.5 ft	SAMPLE NUMBER	SAMPLER RECOVERY (ft) [%]	DEPTH RANGE (ft)	FIELD CLASSIFICATION AND REMARKS	STRATUM SYMBOL
0			5 7 9 12	S1	1.2 [60]	0.0–2.0	Medium dense, dark olive gray, FINE to COARSE SAND, some fine gravel, little silt, little coarse gravel, with cobbles	
							–ALLUVIUM–	
5	5.3	317.9				5.3	–APPROXIMATE BEDROCK SURFACE–	
				C1	3.1 [78]	5.3–9.3	Hard, slightly weathered to fresh, extremely to moderately fractured, medium grained, gray, GNEISS. Foliation is moderately dipping. From 7.5 to 9.3 feet, steep angle fracture across foliation, smooth, slightly weathered. All other fractures are horizontal. RQD: 0.3 / 4.0 = 8%	
10				C2	4.0 [80]	9.3–14.3	Hard, slightly weathered to fresh, moderately to slightly fractured, medium grained, gray, GNEISS. From 10.3 to 10.8 feet, steep angle fracture across moderately dipping foliation. All other fractures are shallow angle to horizontal. RQD: 2.7 / 5.0 = 54%	
15							Bottom of Exploration @ 14.3 ft (El. 308.9)	
20								
25								

Sampler Identification	
S	Standard Split Spoon
SL	Large Spoon (O.D.= 3 in)
T	Thin Wall Tube
U	Undisturbed Piston
O	Open End Rod
A	Auger Flight
C	Core Barrel
NR	Not Recorded

COHESIVE SOILS Blows/foot	Consistency
0 – 1	Very Soft
2 – 4	Soft
5 – 8	Medium Stiff
9 – 15	Stiff
16 – 30	Very Stiff
31 – 60	Hard
> 60	Very Hard

NON-COHESIVE SOILS Blows/foot	Density
0 – 4	Very Loose
5 – 10	Loose
11 – 24	Medium Dense
25 – 50	Dense
> 50	Very Dense
WOR – Weight of Rod	
WOH – Weight of Hammer	

Soil Descriptions	Proportion Major Component
Capitalized Soil Name	35% – 50%
Lower Case Adjective	20% – 35%
Some	10% – 20%
Little	1% – 10%
Trace	

ENGLISH

B30

TEST BORING REPORT

STATE OF NEW HAMPSHIRE DEPARTMENT OF TRANSPORTATION
MATERIALS & RESEARCH BUREAU – GEOTECHNICAL SECTION

PROJECT NAME LEBANON, NH – HARTFORD, VT 14957 BRIDGE NO. 058/128
DESCRIPTION US Route 4 over Connecticut River

BORING NO.	B30
SHEET NO.	1 OF 2
STA.	338+20 OFF. RT 13
BASELINE	NH Route 4 CL
ELEVATION (ft)	362.8
START/END	1/20/11 / 1/25/11
DRILLER	J. Pierce (NHDOT)
INSPECTOR	John Soper
CLASSIFIER	JKS
EAST/NORTH (ft)	812915/420060

GROUNDWATER						EQUIPMENT	SAMPLER	CASING	CORE
DATE	TIME	DEPTH (ft)	ELEV. (ft)	BOTTOM OF CASING	BOTTOM OF HOLE	TYPE:	S	NW	NX
1/20/11	2:00 pm	35.5	327.3	43.7	43.7	SIZE I.D. (in):	1.375	3	1.875
						HAMMER WT. (lb):	140	DRILL RIG	
						HAMMER FALL (in):	30		
						HAMMER TYPE:	Automatic	CME 45-C Track	

DEPTH (ft)	STRATUM CHANGE (ft) DEPTH	ELEVATION	BLOWS PER 0.5 ft	SAMPLE NUMBER	SAMPLER RECOVERY (ft) [%]	DEPTH RANGE (ft)	FIELD CLASSIFICATION AND REMARKS	STRATUM SYMBOL
0	0.3	362.5					–ASPHALT–	
	0.9	361.9					–CONCRETE–	
5								
10								
15							–AIR–	
20								
25								

Sampler Identification	
S	Standard Split Spoon
SL	Large Spoon (O.D.= 3 in)
T	Thin Wall Tube
U	Undisturbed Piston
O	Open End Rod
A	Auger Flight
C	Core Barrel
NR	Not Recorded

COHESIVE SOILS Blows/foot	Consistency
0 – 1	Very Soft
2 – 4	Soft
5 – 8	Medium Stiff
9 – 15	Stiff
16 – 30	Very Stiff
31 – 60	Hard
> 60	Very Hard

NON-COHESIVE SOILS Blows/foot	Density
0 – 4	Very Loose
5 – 10	Loose
11 – 24	Medium Dense
25 – 50	Dense
> 50	Very Dense
WOR – Weight of Rod	
WOH – Weight of Hammer	

Soil Descriptions	Proportion Major Component
Capitalized Soil Name	35% – 50%
Lower Case Adjective	20% – 35%
Some	10% – 20%
Little	1% – 10%
Trace	

ENGLISH

TEST BORING REPORT

STATE OF NEW HAMPSHIRE DEPARTMENT OF TRANSPORTATION
MATERIALS & RESEARCH BUREAU – GEOTECHNICAL SECTION

PROJECT NAME LEBANON, NH – HARTFORD, VT 14957 BRIDGE NO. 058/128
DESCRIPTION US Route 4 over Connecticut River

BORING NO.	B30
SHEET NO.	2 OF 2
STA	338+20 OFF. RT 13
BASELINE	NH Route 4 CL
ELEVATION (ft)	362.8

DEPTH (ft)	STRATUM CHANGE (ft) DEPTH	ELEVATION	BLOWS PER 0.5 ft	SAMPLE NUMBER	SAMPLER RECOVERY (ft) [%]	DEPTH RANGE (ft)	FIELD CLASSIFICATION AND REMARKS	STRATUM SYMBOL
30							–AIR–	
35	35.5	327.3					–WATER–	
	38.4	324.4					Advanced roller through various cobbles and gravel to 41.0 feet. –ALLUVIUM–	
40			7 6 6 7	S1	0.6 [30]	41.0–43.0	Medium dense, gray, silty FINE SAND, trace medium sand	
	43.7	319.1				43.7	–APPROXIMATE BEDROCK SURFACE–	
45				C1	4.5 [90]	43.7–48.7	Hard and moderately hard, fresh, slightly fractured to sound, gray, medium grained, GNEISS, and medium grained SCHIST. From 43.7 to 47.2 feet, GNEISS, and 47.2 to 48.7 feet, schist. Foliation is moderately dipping. At 44.8 feet, moderately dipping fracture across foliation, smooth. All other fractures are along foliation. RQD: 4.3 / 5.0 = 86%	
50				C2	4.8 [96]	48.7–53.7	Moderately hard and hard, very slightly weathered to fresh, moderately fractured to sound, dark gray, medium grained, SCHIST, and medium grained, GNEISS. Foliation is shallow angle. All fractures are along foliation. Schist from 48.7 to 53.2 feet. GNEISS from 53.2 to 53.7 feet. RQD: 4.2 / 5.0 = 84%	
55				C3	4.8 [96]	53.7–58.7	Hard and moderately hard, fresh, moderately fractured to sound, gray, medium grained, GNEISS, and medium grained, SCHIST. Foliation is moderately dipping. GNEISS from 53.7 to 55.3 feet. Schist from 55.3 to 58.7 feet. RQD: 4.6 / 5.0 = 92%	
60				C4	4.8 [96]	58.7–63.7	Hard, very slightly weathered to fresh, extremely fractured to sound, medium grained, gray, GNEISS. Foliation is moderately dipping. From 59.9 to 61.2 feet, steep angle fracture, smooth, iron stained. At 63.2 feet, fracture along foliation, smooth. All other fractures are horizontal or shallow angle. RQD: 3.5 / 5.0 = 70%	
65							Bottom of Exploration @ 63.7 ft (El. 299.1)	

TF = TOP OF FOOTING
BF = BOTTOM OF FOOTING

BORING LOGS

SCALE: 1/4" = 1'-0"

STATE OF NEW HAMPSHIRE
DEPARTMENT OF TRANSPORTATION * BUREAU OF BRIDGE DESIGN

TOWN LEBANON, NH - HARTFORD, VT BRIDGE NO. 058\128 STATE PROJECT 14957
LOCATION US ROUTE 4 over CONNECTICUT RIVER

BORING LOGS (4 OF 7)

REVISIONS AFTER PROPOSAL		BY	DATE		BY	DATE
	DESIGNED	NHDOT	---	CHECKED	NHDOT	---
	DRAWN	SMG	2/11	CHECKED	JWP	2/11
	QUANTITIES	---	---	CHECKED	---	---

SUBDIRECTORY	.DGN LOCATOR	SHEET SCALE	ISSUE DATE	FEDERAL PROJECT NO.	SHEET NO.	TOTAL SHEETS
BRC/BRSITE	14957BoringLog	AS NOTED	REV. DATE	----------	36	157

BRIDGE SHEET 11 OF 71
FILE NUMBER 110-6-1

ABUTMENT B

B25

TEST BORING REPORT
STATE OF NEW HAMPSHIRE DEPARTMENT OF TRANSPORTATION
MATERIALS & RESEARCH BUREAU – GEOTECHNICAL SECTION

PROJECT NAME LEBANON, NH – HARTFORD, VT 14957 BRIDGE NO. 058/128
DESCRIPTION US Route 4 over Connecticut River

BORING NO. B25
SHEET NO. 1 OF 2
STA. 339+83 OFF. LT 22
BASELINE NH Route 4 CL
ELEVATION (ft) 358.5
START/END 8/11/10 / 8/11/10
DRILLER Northern Test Boring
INSPECTOR John Soper
CLASSIFIER JKS
EAST/NORTH (ft) 813081/420051

GROUNDWATER DATE	TIME	DEPTH (ft)	ELEV. (ft)	BOTTOM OF CASING	BOTTOM OF HOLE
8/11/10	12:00 pm	28.9	329.6	30	46

EQUIPMENT	SAMPLER	CASING	CORE
TYPE:	S	NW	NX
SIZE I.D. (in):	1.375	3	1.875
HAMMER WT. (lb):	140	DRILL RIG	
HAMMER FALL (in):	30	Diedrich D-50 Trc	
HAMMER TYPE:	Automatic		

DEPTH (ft)	STRATUM CHANGE (ft) DEPTH	ELEVATION	BLOWS PER 0.5 ft	SAMPLE NUMBER	SAMPLER RECOVERY (ft) [%]	DEPTH RANGE (ft)	FIELD CLASSIFICATION AND REMARKS
0			12 6 6 3	S1	1.3 [65]	0.0 – 2.0	Medium dense, dark gray, silty FINE SAND, some fine gravel, little medium and coarse sand
							–FILL–
5			3 2 2 2	S2	0.3 [15]	5.0 – 7.0	Very loose, dark gray, silty FINE SAND, little medium and coarse sand, trace fine gravel, with pieces of plastic and glass
10			3 2 5 5	S3	0.9 [45]	10.0 – 12.0	Loose, similar to S2
	13.5	345.0					
15			3 2 1 2	S4	1.3 [65]	15.0 – 17.0	Very loose, dark olive gray, silty FINE SAND, with frequent seams and parlings of fine sand, little silt
							–ALLUVIUM–
20			4 3 4 4	S5	1.2 [60]	20.0 – 22.0	Loose, dark olive gray, FINE SAND, some silt
25			3 2 1 2	S6	1.1 [55]	25.0 – 27.0	Very loose, similar to S5

TF, BF

Sampler Identification	
S	Standard Split Spoon
SL	Large Spoon (O.D.= 3 in)
T	Thin Wall Tube
U	Undisturbed Piston
O	Open End Rod
A	Auger Flight
C	Core Barrel
NR	Not Recorded

COHESIVE SOILS Blows/foot	Consistency
0 – 1	Very Soft
2 – 4	Soft
5 – 8	Medium Stiff
9 – 15	Stiff
16 – 30	Very Stiff
31 – 60	Hard
> 60	Very Hard

NON-COHESIVE SOILS Blows/foot	Density
0 – 4	Very Loose
5 – 10	Loose
11 – 24	Medium Dense
25 – 50	Dense
> 50	Very Dense

WOR – Weight of Rod
WOH – Weight of Hammer

Soil Descriptions	Proportion
Capitalized Soil Name	Major Component
Lower Case Adjective	35% – 50%
Some	20% – 35%
Little	10% – 20%
Trace	1% – 10%

ENGLISH

TEST BORING REPORT
STATE OF NEW HAMPSHIRE DEPARTMENT OF TRANSPORTATION
MATERIALS & RESEARCH BUREAU – GEOTECHNICAL SECTION

PROJECT NAME LEBANON, NH – HARTFORD, VT 14957 BRIDGE NO. 058/128
DESCRIPTION US Route 4 over Connecticut River

BORING NO. B25
SHEET NO. 2 OF 2
STA. 339+83 OFF. LT 22
BASELINE NH Route 4 CL
ELEVATION (ft) 358.5

DEPTH (ft)	STRATUM CHANGE (ft) DEPTH	ELEVATION	BLOWS PER 0.5 ft	SAMPLE NUMBER	SAMPLER RECOVERY (ft) [%]	DEPTH RANGE (ft)	FIELD CLASSIFICATION AND REMARKS
30	29.5	329.0	21 12 12 8	S7	0.7 [35]	30.0 – 32.0	Medium dense, dark gray, FINE SAND, some silt, trace medium and coarse sand, trace fine and coarse gravel, with occasional cobble
							–GLACIO FLUVIAL–
35			75	S8	0.2 [40]	35.0 – 35.5	Very dense, similar to S7
	36.0	322.5				36.0	–APPROXIMATE BEDROCK SURFACE–
40				C1	2.7 [54]	36.9 – 41.0	Hard, very slightly weathered to fresh, extremely to moderately fractured, medium and fine grained, gray, GNEISS. Foliation is moderately dipping to steep angle. At 36.9 feet, fracture along foliation strong iron stain. All other fractures are horizontal. RQD: 2.1 / 5.0 = 42%
				C2	2.8 [56]	41.0 – 46.0	Hard, very slightly weathered to fresh, extremely fractured to sound, medium and fine grained, gray, GNEISS. Foliation is moderately dipping to steep angle. All fractures are horizontal. RQD: 1.8 / 5.0 = 36%
45							Bottom of Exploration @ 46.0 ft (El. 312.5)
50							
55							
60							
65							

B26C

TEST BORING REPORT
STATE OF NEW HAMPSHIRE DEPARTMENT OF TRANSPORTATION
MATERIALS & RESEARCH BUREAU – GEOTECHNICAL SECTION

PROJECT NAME LEBANON, NH – HARTFORD, VT 14957 BRIDGE NO. 058/128
DESCRIPTION US Route 4 over Connecticut River

BORING NO. B26C
SHEET NO. 1 OF 2
STA. 339+91 OFF. RT 02
BASELINE NH Route 4 CL
ELEVATION (ft) 359.5
START/END 11/29/10 / 11/29/10
DRILLER Northern Test Boring
INSPECTOR John Soper
CLASSIFIER JKS
EAST/NORTH (ft) 813083/420026

GROUNDWATER DATE	TIME	DEPTH (ft)	ELEV. (ft)	BOTTOM OF CASING	BOTTOM OF HOLE
11/29/10	4:00 pm	29.3	330.2	25	47.8

EQUIPMENT	SAMPLER	CASING	CORE
TYPE:	S	NW	NX
SIZE I.D. (in):	1.375	3	1.875
HAMMER WT. (lb):	140	DRILL RIG	
HAMMER FALL (in):	30	Diedrich B-50 Trc	
HAMMER TYPE:	Automatic		

DEPTH (ft)	STRATUM CHANGE (ft) DEPTH	ELEVATION	BLOWS PER 0.5 ft	SAMPLE NUMBER	SAMPLER RECOVERY (ft) [%]	DEPTH RANGE (ft)	FIELD CLASSIFICATION AND REMARKS
0							Notes: 1. See test boring log for B26 for soil information from 0 to 21.5 feet. Based on the B26 information, the Fill/Alluvium interface is at approximately 17.8 feet (El. 341.7). 2. Drilled through cobbles and small boulders during casing advancement from 0.0 to 23.0 feet.
							–FILL–
5							
10							
15							
	17.8	341.7					
20							–ALLUVIUM–
25	25.0	334.5	11 8 5 11	S1	0.9 [45]	25.0 – 27.0	Medium dense, dark olive gray, silty FINE SAND, some fine gravel, little medium and coarse sand
							–GLACIO–FLUVIAL–

TF, BF

Sampler Identification	
S	Standard Split Spoon
SL	Large Spoon (O.D.= 3 in)
T	Thin Wall Tube
U	Undisturbed Piston
O	Open End Rod
A	Auger Flight
C	Core Barrel
NR	Not Recorded

COHESIVE SOILS Blows/foot	Consistency
0 – 1	Very Soft
2 – 4	Soft
5 – 8	Medium Stiff
9 – 15	Stiff
16 – 30	Very Stiff
31 – 60	Hard
> 60	Very Hard

NON-COHESIVE SOILS Blows/foot	Density
0 – 4	Very Loose
5 – 10	Loose
11 – 24	Medium Dense
25 – 50	Dense
> 50	Very Dense

WOR – Weight of Rod
WOH – Weight of Hammer

Soil Descriptions	Proportion
Capitalized Soil Name	Major Component
Lower Case Adjective	35% – 50%
Some	20% – 35%
Little	10% – 20%
Trace	1% – 10%

ENGLISH

TEST BORING REPORT
STATE OF NEW HAMPSHIRE DEPARTMENT OF TRANSPORTATION
MATERIALS & RESEARCH BUREAU – GEOTECHNICAL SECTION

PROJECT NAME LEBANON, NH – HARTFORD, VT 14957 BRIDGE NO. 058/128
DESCRIPTION US Route 4 over Connecticut River

BORING NO. B26C
SHEET NO. 2 OF 2
STA. 339+91 OFF. RT 02
BASELINE NH Route 4 CL
ELEVATION (ft) 359.5

DEPTH (ft)	STRATUM CHANGE (ft) DEPTH	ELEVATION	BLOWS PER 0.5 ft	SAMPLE NUMBER	SAMPLER RECOVERY (ft) [%]	DEPTH RANGE (ft)	FIELD CLASSIFICATION AND REMARKS
30			4 5 15 22	S2	1.1 [55]	30.0 – 32.0	Medium dense, olive gray, FINE and MEDIUM SAND, some silt, over dark gray, silty FINE SAND, little medium and coarse sand, little to fine gravel
							–GLACIO–FLUVIAL–
35	36.8	322.7					–APPROXIMATE BEDROCK SURFACE–
40				C1	4.6 [92]	38.8 – 43.8	Medium hard to hard, moderately severe weathering to fresh, extremely fractured to sound, dark gray, medium grained, SCHIST, medium grained, gray, GNEISS. Medium hard and moderately severe from 38.8 to 40.0 feet. Schist from 38.3 to 41.1 feet, with occasional seam of gneiss. Gneiss from 41.1 to 43.8 feet. All fractures are steep angle along foliation. RQD: 2.4 / 5.0 = 48%
45				C2	4.0 [100]	43.8 – 47.8	Moderately hard to very hard, slightly weathered to fresh, very fine white, quartz, medium grained, dark gray, SCHIST, and medium grained, gray, GNEISS. Quartz intrusion from 43.8 to 45.5 feet. Gneiss from 45.5 to 47.8 feet, with frequent seams of schist. RQD: 1.8 / 4.0 = 45%
							Bottom of Exploration @ 47.8 ft (El. 311.7)
50							
55							
60							
65							

TF = TOP OF FOOTING
BF = BOTTOM OF FOOTING

BORING LOGS

SCALE: 1/4" = 1'-0"

STATE OF NEW HAMPSHIRE
DEPARTMENT OF TRANSPORTATION * BUREAU OF BRIDGE DESIGN

TOWN LEBANON, NH - HARTFORD, VT BRIDGE NO. 058\128 STATE PROJECT 14957
LOCATION US ROUTE 4 over CONNECTICUT RIVER

BORING LOGS (5 OF 7)

REVISIONS AFTER PROPOSAL		BY	DATE		BY	DATE
	DESIGNED	NHDOT	---	CHECKED	NHDOT	---
	DRAWN	SMG	2/11	CHECKED	JWP	2/11
	QUANTITIES	---	---	CHECKED	---	---
	ISSUE DATE		FEDERAL PROJECT NO.		SHEET NO.	TOTAL SHEETS
	REV. DATE		----------		37	157

BRIDGE SHEET 12 OF 71
FILE NUMBER 110-6-1

SUBDIRECTORY	.DGN LOCATOR	SHEET SCALE
BRC/BRSITE	14957BoringLog	AS NOTED

ABUTMENT B

B26

TEST BORING REPORT

STATE OF NEW HAMPSHIRE DEPARTMENT OF TRANSPORTATION
MATERIALS & RESEARCH BUREAU – GEOTECHNICAL SECTION

PROJECT NAME LEBANON, NH – HARTFORD, VT 14957 BRIDGE NO. 058/128
DESCRIPTION US Route 4 over Connecticut River

GROUNDWATER						EQUIPMENT	SAMPLER	CASING	CORE
DATE	TIME	DEPTH (ft)	ELEV. (ft)	BOTTOM OF CASING	BOTTOM OF HOLE	TYPE:	S	HW	
						SIZE I.D. (in):	1.375	3	
						HAMMER WT. (lb):	140	DRILL RIG	
						HAMMER FALL (in):	30	Diedrich D-50 Truck	
						HAMMER TYPE:	Automatic		

BORING NO. B26
SHEET NO. 1 OF 1
STA. 339+99 OFF. RT 04
BASELINE NH Route 4 CL
ELEVATION (ft) 359.2
START/END 8/11/10 / 8/11/10
DRILLER Northern Test Boring
INSPECTOR John Soper
CLASSIFIER JKS
EAST/NORTH (ft) 813090/420022

DEPTH (ft)	STRATUM CHANGE (ft) DEPTH	ELEVATION	BLOWS PER 0.5 ft	SAMPLE NUMBER	SAMPLER RECOVERY (ft) [%]	DEPTH RANGE (ft)	FIELD CLASSIFICATION AND REMARKS	STRATUM SYMBOL
0	0.5	358.7					–ASPHALT–	
			5 6 8 8	S1	1.5 [75]	1.0–3.0	Medium dense, olive gray, FINE SAND, some medium and coarse sand, little silt, little fine gravel	
							–FILL–	
5			5 6 7 5	S2	1.0 [50]	5.0–7.0	Medium dense, olive gray, silty FINE SAND, little medium and coarse sand, little to trace fine gravel	
10			6 13 19 15	S3	1.3 [65]	10.0–12.0	Dense, similar to S2. When advancing to 15.0 feet, advanced through cobbles and a small boulder.	
TF 15			17 13 50	S4	1.1 [65]	15.0–16.7	Cobble	
BF	17.5	341.7					–ALLUVIUM–	
20			6 2 2 50/0.3	S5	0.9 [53]	20.0–21.7	Very loose, olive gray, silty FINE SAND	
	21.5	337.7					Drilled with roller bit to 25 feet. 10 feet of casing broken off from 12 feet. Abandoned hole and moved 8 feet west to B26A.	
							–PROBABLE GLACIO-FLUVIAL–	
25							Bottom of Exploration ● 25.0 ft (El. 334.2)	

Sampler Identification	
S	Standard Split Spoon
SL	Large Spoon (O.D.= 3 in)
T	Thin Wall Tube
U	Undisturbed Piston
O	Open End Rod
A	Auger Flight
C	Core Barrel
NR	Not Recorded

COHESIVE SOILS Blows/foot	Consistency
0 – 1	Very Soft
2 – 4	Soft
5 – 8	Medium Stiff
9 – 15	Stiff
16 – 30	Very Stiff
31 – 60	Hard
> 60	Very Hard

NON-COHESIVE SOILS Blows/foot	Density
0 – 4	Very Loose
5 – 10	Loose
11 – 24	Medium Dense
25 – 50	Dense
> 50	Very Dense
WOR – Weight of Rod	
WOH – Weight of Hammer	

Soil Descriptions	Proportion
Capitalized Soil Name	Major Component
Lower Case Adjective	35% – 50%
Some	20% – 35%
Little	10% – 20%
Trace	1% – 10%

ENGLISH

B26A

TEST BORING REPORT

STATE OF NEW HAMPSHIRE DEPARTMENT OF TRANSPORTATION
MATERIALS & RESEARCH BUREAU – GEOTECHNICAL SECTION

PROJECT NAME LEBANON, NH – HARTFORD, VT 14957 BRIDGE NO. 058/128
DESCRIPTION US Route 4 over Connecticut River

GROUNDWATER						EQUIPMENT	SAMPLER	CASING	CORE
DATE	TIME	DEPTH (ft)	ELEV. (ft)	BOTTOM OF CASING	BOTTOM OF HOLE	TYPE:		HW	
						SIZE I.D. (in):		4	
						HAMMER WT. (lb):		DRILL RIG	
						HAMMER FALL (in):		Diedrich D-50 Truck	
						HAMMER TYPE:			

BORING NO. B26A
SHEET NO. 1 OF 1
STA. 339+91 OFF. RT 04
BASELINE NH Route 4 CL
ELEVATION (ft) 359.4
START/END 8/11/10 / 8/11/10
DRILLER Northern Test Boring
INSPECTOR John Soper
CLASSIFIER JKS
EAST/NORTH (ft) 813082/420024

DEPTH (ft)	STRATUM CHANGE (ft) DEPTH	ELEVATION	BLOWS PER 0.5 ft	SAMPLE NUMBER	SAMPLER RECOVERY (ft) [%]	DEPTH RANGE (ft)	FIELD CLASSIFICATION AND REMARKS	STRATUM SYMBOL
0							Notes: 1. See test boring log for B26 for soil information from 0 to 21.5 feet. Based on the B26 information, the Fill/Alluvium interface is at approximately 17.7 feet (El. 341.7). 2. Drilled through cobbles and small boulders during casing advancement from 0.0 to 20.0 feet. 3. There was a strong petroleum smell in the drill cuttings from 0.0 to 20.0 feet. 4. Could not advance hole past 20.0 feet due to the 3 inch casing breaking off at 10.0 feet. Hole abandoned and moved to B26B located feet east.	
							–FILL–	
TF 15								
BF	17.7	341.7					–PROBABLE ALLUVIUM–	
20							Bottom of Exploration ● 20.0 ft (El. 339.4)	
25								

Sampler Identification	
S	Standard Split Spoon
SL	Large Spoon (O.D.= 3 in)
T	Thin Wall Tube
U	Undisturbed Piston
O	Open End Rod
A	Auger Flight
C	Core Barrel
NR	Not Recorded

COHESIVE SOILS Blows/foot	Consistency
0 – 1	Very Soft
2 – 4	Soft
5 – 8	Medium Stiff
9 – 15	Stiff
16 – 30	Very Stiff
31 – 60	Hard
> 60	Very Hard

NON-COHESIVE SOILS Blows/foot	Density
0 – 4	Very Loose
5 – 10	Loose
11 – 24	Medium Dense
25 – 50	Dense
> 50	Very Dense
WOR – Weight of Rod	
WOH – Weight of Hammer	

Soil Descriptions	Proportion
Capitalized Soil Name	Major Component
Lower Case Adjective	35% – 50%
Some	20% – 35%
Little	10% – 20%
Trace	1% – 10%

ENGLISH

B26B

TEST BORING REPORT

STATE OF NEW HAMPSHIRE DEPARTMENT OF TRANSPORTATION
MATERIALS & RESEARCH BUREAU – GEOTECHNICAL SECTION

PROJECT NAME LEBANON, NH – HARTFORD, VT 14957 BRIDGE NO. 058/128
DESCRIPTION US Route 4 over Connecticut River

GROUNDWATER						EQUIPMENT	SAMPLER	CASING	CORE
DATE	TIME	DEPTH (ft)	ELEV. (ft)	BOTTOM OF CASING	BOTTOM OF HOLE	TYPE:	S	HW	
						SIZE I.D. (in):	1.375	4	
						HAMMER WT. (lb):	140	DRILL RIG	
						HAMMER FALL (in):	30	Diedrich D-50 Truck	
						HAMMER TYPE:	Automatic		

BORING NO. B26B
SHEET NO. 1 OF 2
STA. 339+94 OFF. RT 02
BASELINE NH Route 4 CL
ELEVATION (ft) 359.3
START/END 8/13/10 / 8/13/10
DRILLER Northern Test Boring
INSPECTOR John Soper
CLASSIFIER JKS
EAST/NORTH (ft) 813086/420025

DEPTH (ft)	STRATUM CHANGE (ft) DEPTH	ELEVATION	BLOWS PER 0.5 ft	SAMPLE NUMBER	SAMPLER RECOVERY (ft) [%]	DEPTH RANGE (ft)	FIELD CLASSIFICATION AND REMARKS	STRATUM SYMBOL
0							Notes: 1. See test boring log for B26 for soil information from 0 to 21.5 feet. Based on the B26 information, the Fill/Alluvium interface is at approximately 17.6 feet (El. 341.7). 2. Drilled through cobbles and small boulders during casing advancement from 0.0 to 20.0 feet. 3. There was a strong petroleum smell in the drill cuttings from 0.0 to 20.0 feet. 4. Could not advance hole past 25.0 feet due to the 3 inch casing breaking off at 10.0 feet. (Driller had telescoped through the 4 inch casing with 3 inch casing).	
							–FILL–	
TF 15								
BF	17.6	341.7					–ALLUVIUM–	
20								
25			4 4 4 3	S1	1.1 [55]	25.0–27.0	Loose, olive gray, silty FINE SAND. Advanced roller bit to 30.0 feet. Abandoned hole at 30 feet due to casing breaking off. Moved to B26C located 3 feet west.	

Sampler Identification	
S	Standard Split Spoon
SL	Large Spoon (O.D.= 3 in)
T	Thin Wall Tube
U	Undisturbed Piston
O	Open End Rod
A	Auger Flight
C	Core Barrel
NR	Not Recorded

COHESIVE SOILS Blows/foot	Consistency
0 – 1	Very Soft
2 – 4	Soft
5 – 8	Medium Stiff
9 – 15	Stiff
16 – 30	Very Stiff
31 – 60	Hard
> 60	Very Hard

NON-COHESIVE SOILS Blows/foot	Density
0 – 4	Very Loose
5 – 10	Loose
11 – 24	Medium Dense
25 – 50	Dense
> 50	Very Dense
WOR – Weight of Rod	
WOH – Weight of Hammer	

Soil Descriptions	Proportion
Capitalized Soil Name	Major Component
Lower Case Adjective	35% – 50%
Some	20% – 35%
Little	10% – 20%
Trace	1% – 10%

ENGLISH

TEST BORING REPORT

STATE OF NEW HAMPSHIRE DEPARTMENT OF TRANSPORTATION
MATERIALS & RESEARCH BUREAU – GEOTECHNICAL SECTION

PROJECT NAME LEBANON, NH – HARTFORD, VT 14957 BRIDGE NO. 058/128
DESCRIPTION US Route 4 over Connecticut River

BORING NO. B26B
SHEET NO. 2 OF 2
STA. 339+94 OFF. RT 02
BASELINE NH Route 4 CL
ELEVATION (ft) 359.3

DEPTH (ft)	STRATUM CHANGE (ft) DEPTH	ELEVATION	BLOWS PER 0.5 ft	SAMPLE NUMBER	SAMPLER RECOVERY (ft) [%]	DEPTH RANGE (ft)	FIELD CLASSIFICATION AND REMARKS	STRATUM SYMBOL
30							Bottom of Exploration ● 30.0 ft (El. 329.3)	
35								

TF = TOP OF FOOTING
BF = BOTTOM OF FOOTING

NOTE:
DUE TO THE CLOSE PROXIMITY OF BORINGS B26, B26A, B26B, & B26C, ONLY THE BORING SYMBOL FOR B26C IS SHOWN ON THE PLAN VIEW.

BORING LOGS

SCALE: 1/4" = 1'-0"

STATE OF NEW HAMPSHIRE
DEPARTMENT OF TRANSPORTATION * BUREAU OF BRIDGE DESIGN

TOWN LEBANON, NH - HARTFORD, VT BRIDGE NO. 058\128 STATE PROJECT 14957
LOCATION US ROUTE 4 over CONNECTICUT RIVER

BORING LOGS (6 OF 7)

REVISIONS AFTER PROPOSAL	BY	DATE		BY	DATE
DESIGNED	NHDOT	---	CHECKED	NHDOT	---
DRAWN	SMG	2/11	CHECKED	JWP	2/11
QUANTITIES	---	---	CHECKED	---	---

ISSUE DATE
REV. DATE
FEDERAL PROJECT NO. ----------
SHEET NO. 38

BRIDGE SHEET 13 OF 71
FILE NUMBER 110-6-1
TOTAL SHEETS 157

SUBDIRECTORY	.DGN LOCATOR	SHEET SCALE
BRC/BRSITE	14957BoringLog	AS NOTED

RETAINING WALL

B27

TEST BORING REPORT
STATE OF NEW HAMPSHIRE DEPARTMENT OF TRANSPORTATION
MATERIALS & RESEARCH BUREAU – GEOTECHNICAL SECTION

PROJECT NAME LEBANON, NH – HARTFORD, VT 14957 BRIDGE NO. 058/128
DESCRIPTION US Route 4 over Connecticut River

BORING NO. B27
SHEET NO. 1 OF 2
STA. 340+03 OFF. LT 106
BASELINE NH Route 4 CL
ELEVATION (ft) 348.0
START/END 8/12/10 / 8/12/10
DRILLER Northern Test Boring
INSPECTOR John Soper
CLASSIFIER JKS
EAST/NORTH (ft) 813123/420127

GROUNDWATER					EQUIPMENT	SAMPLER	CASING	CORE
DATE	TIME	DEPTH (ft)	ELEV. (ft)	BOTTOM OF CASING	BOTTOM OF HOLE	TYPE:	5	NW	NX
8/12/10	1:00 pm	18.3	329.7	0	36	SIZE I.D. (in):	1.375	3	1.875
						HAMMER WT. (lb):	140	DRILL RIG	
						HAMMER FALL (in):	30		
						HAMMER TYPE:	Automatic	Diedrich D-50 Trc	

DEPTH (ft)	STRATUM CHANGE (ft) DEPTH	STRATUM CHANGE (ft) ELEVATION	BLOWS PER 0.5 ft	SAMPLE NUMBER	SAMPLER RECOVERY (ft) [%]	DEPTH RANGE (ft)	FIELD CLASSIFICATION AND REMARKS	STRATUM SYMBOL
0			6 8 11 8	S1	1.3 [65]	0.0 – 2.0	Medium dense, dark olive gray, silty FINE SAND, little medium and coarse sand, trace fine gravel –FILL–	
5			1 1 1 1	S2	1.2 [60]	5.0 – 7.0	Very loose, dark olive gray, silty FINE SAND, little medium and coarse sand, trace fine gravel, with a layer of dark gray/black coal ash and cinders	
10				S3	0.2 [10]	10.0 – 12.0	GRAVEL	
	13.5	334.5					Wash water had a color and material change at approximately 13.5 feet	
15			1 1 1 1	S4	1.5 [75]	15.0 – 17.0	Very loose, dark olive gray, silty FINE SAND, with occasional seam of FINE SAND, little silt –ALLUVIUM–	
	18.5	329.5					Wash water had a color and material change at approximately 18.5 feet	
20			11 15 11 13	S5	1.3 [65]	20.0 – 22.0	Dense, olive gray, FINE SAND, some silt, some to little medium and coarse sand, little fine gravel, trace coarse gravel, with occasional cobble –GLACIO FLUVIAL–	
25	24.7	323.3					–APPROXIMATE BEDROCK SURFACE–	
				C1	4.2 [84]	26.0 – 28.0	Hard and moderately hard, very slightly weathered to fresh, moderately fractured to sound, medium and fine grained gray, GNEISS, and dark gray, SCHIST. Schist at 26.2 to 26.5 feet and 28.8 to 31.0 feet. Foliation is moderately dipping to steep angle. At 27.8 and 28.0 feet,	

Sampler Identification	
S	Standard Split Spoon
SL	Large Spoon (O.D.= 3 in)
T	Thin Wall Tube
U	Undisturbed Piston
O	Open End Rod
A	Auger Flight
C	Core Barrel
NR	Not Recorded

COHESIVE SOILS Blows/foot	Consistency
0 – 1	Very Soft
2 – 4	Soft
5 – 8	Medium Stiff
9 – 15	Stiff
16 – 30	Very Stiff
31 – 60	Hard
> 60	Very Hard

NON-COHESIVE SOILS Blows/foot	Density
0 – 4	Very Loose
5 – 10	Loose
11 – 24	Medium Dense
25 – 50	Dense
> 50	Very Dense

WOR – Weight of Rod
WOH – Weight of Hammer

Soil Descriptions	Proportion
Capitalized Soil Name	Major Component
Lower Case Adjective	35% – 50%
Some	20% – 35%
Little	10% – 20%
Trace	1% – 10%

ENGLISH

TEST BORING REPORT
STATE OF NEW HAMPSHIRE DEPARTMENT OF TRANSPORTATION
MATERIALS & RESEARCH BUREAU – GEOTECHNICAL SECTION

PROJECT NAME LEBANON, NH – HARTFORD, VT 14957 BRIDGE NO. 058/128
DESCRIPTION US Route 4 over Connecticut River

BORING NO. B27
SHEET NO. 2 OF 2
STA. 340+03 OFF. LT 106
BASELINE NH Route 4 CL
ELEVATION (ft) 348.0

DEPTH (ft)	STRATUM CHANGE (ft) DEPTH	STRATUM CHANGE (ft) ELEVATION	BLOWS PER 0.5 ft	SAMPLE NUMBER	SAMPLER RECOVERY (ft) [%]	DEPTH RANGE (ft)	FIELD CLASSIFICATION AND REMARKS	STRATUM SYMBOL
							fractures along foliation. All other fractures are shallow angle and horizontal across foliation. RQD: 3.0 / 5.0 = 60%	
				C2	3.0 [60]	31.0 – 36.0	Hard and moderately hard, slightly weathered to fresh, extremely to slightly fractured, fine grained, dark gray, SCHIST, and medium and fine grained, gray, GNEISS. Schist from 31.0 to 33.4 feet, and GNEISS from 33.4 to 36.0 feet. Foliation is shallow angle. Zone of slightly weathered rock at 33.4 to 34.0 feet. All fractures are along foliation. RQD: 1.5 / 5.0 = 30%	
							Bottom of Exploration @ 36.0 ft (El. 312.0)	
							Note: There was a strong petroleum odor in the soil collected in S5 (20–22) feet. The odor was first detected at approximately 18.5 feet, when advancing the casing to 20.0 feet. The driller replaced recycled water with fresh water at 22 feet, then a strong odor of petroleum was again detected when coring bedrock at 26 feet.	

B29

TEST BORING REPORT
STATE OF NEW HAMPSHIRE DEPARTMENT OF TRANSPORTATION
MATERIALS & RESEARCH BUREAU – GEOTECHNICAL SECTION

PROJECT NAME LEBANON, NH – HARTFORD, VT 14957 BRIDGE NO. 058/128
DESCRIPTION US Route 4 over Connecticut River

BORING NO. B29
SHEET NO. 1 OF 2
STA. 340+34 OFF. LT 35
BASELINE NH Route 4 CL
ELEVATION (ft) 349.7
START/END 8/12/10 / 8/12/10
DRILLER Northern Test Boring
INSPECTOR John Soper
CLASSIFIER JKS
EAST/NORTH (ft) 813134/420051

GROUNDWATER					EQUIPMENT	SAMPLER	CASING	CORE
DATE	TIME	DEPTH (ft)	ELEV. (ft)	BOTTOM OF CASING	BOTTOM OF HOLE	TYPE:	5	HW	NX
8/13/10	10:00 am	22.9	326.8	0	44	SIZE I.D. (in):	1.375	4	1.875
						HAMMER WT. (lb):	140	DRILL RIG	
						HAMMER FALL (in):	30		
						HAMMER TYPE:	Automatic	Diedrich D-50 Trc	

DEPTH (ft)	STRATUM CHANGE (ft) DEPTH	STRATUM CHANGE (ft) ELEVATION	BLOWS PER 0.5 ft	SAMPLE NUMBER	SAMPLER RECOVERY (ft) [%]	DEPTH RANGE (ft)	FIELD CLASSIFICATION AND REMARKS	STRATUM SYMBOL
0			3 3 4 3	S1	1.3 [65]	0.0 – 2.0	Loose, light olive gray, silty FINE SAND, trace medium and coarse sand, trace fine gravel, with a lay of coal ash and cinders –FILL–	
5	9.0	340.7	1 2 2 2	S2	1.7 [85]	5.0 – 7.0	Very loose, light olive gray, silty FINE SAND, with pieces of asphalt and red brick	
							Wash water had a color and material change at approximately 9.0 feet	
10			3 1 2 3	S3	1.7 [85]	10.0 – 12.0	Very loose, light olive gray, silty FINE SAND, with frequent seam and parting of fine sand, little silt –ALLUVIUM–	
15			1 1 2 1	S4	0.6 [30]	15.0 – 17.0	Very loose, similar to S3	
	19.0	330.7					Wash water had a color and material change at approximately 19.0 feet	
20			7 6 50/0.3	S5	1.0 [77]	20.0 – 21.3	Medium dense, dark gray, FINE and MEDIUM SAND, little coarse sand, trace silt, trace fine gravel –GLACIO FLUVIAL– Encountered cobbles and coarse gravel when advancing casing to 25 feet.	
25			5 9 16 11	S6	0.5 [25]	25.0 – 27.0	Dense, gray, FINE to COARSE SAND, some fine gravel, trace coarse gravel, with cobbles, trace silt	

Sampler Identification	
S	Standard Split Spoon
SL	Large Spoon (O.D.= 3 in)
T	Thin Wall Tube
U	Undisturbed Piston
O	Open End Rod
A	Auger Flight
C	Core Barrel
NR	Not Recorded

COHESIVE SOILS Blows/foot	Consistency
0 – 1	Very Soft
2 – 4	Soft
5 – 8	Medium Stiff
9 – 15	Stiff
16 – 30	Very Stiff
31 – 60	Hard
> 60	Very Hard

NON-COHESIVE SOILS Blows/foot	Density
0 – 4	Very Loose
5 – 10	Loose
11 – 24	Medium Dense
25 – 50	Dense
> 50	Very Dense

WOR – Weight of Rod
WOH – Weight of Hammer

Soil Descriptions	Proportion
Capitalized Soil Name	Major Component
Lower Case Adjective	35% – 50%
Some	20% – 35%
Little	10% – 20%
Trace	1% – 10%

ENGLISH

TEST BORING REPORT
STATE OF NEW HAMPSHIRE DEPARTMENT OF TRANSPORTATION
MATERIALS & RESEARCH BUREAU – GEOTECHNICAL SECTION

PROJECT NAME LEBANON, NH – HARTFORD, VT 14957 BRIDGE NO. 058/128
DESCRIPTION US Route 4 over Connecticut River

BORING NO. B29
SHEET NO. 2 OF 2
STA. 340+34 OFF. LT 35
BASELINE NH Route 4 CL
ELEVATION (ft) 349.7

DEPTH (ft)	STRATUM CHANGE (ft) DEPTH	STRATUM CHANGE (ft) ELEVATION	BLOWS PER 0.5 ft	SAMPLE NUMBER	SAMPLER RECOVERY (ft) [%]	DEPTH RANGE (ft)	FIELD CLASSIFICATION AND REMARKS	STRATUM SYMBOL
							–GLACIO FLUVIAL–	
	32.2	317.5		C1	0.1 [10]	31.0 – 32.2	Gravel	
							–APPROXIMATE BEDROCK SURFACE– Advance roller bit to 34.0 feet.	
				C2	3.4 [68]	34.0 – 39.0	Moderately hard, severe to very slightly weathered, moderately to slightly fractured, dark gray, fine grained, SCHIST. Foliation is moderately dipping. At 36.7 feet, severely weathered rock, with pitting. All fractures are along shallow angle. RQD: 2.6 / 5.0 = 52%	
				C3	4.1 [82]	39.0 – 44.0	Moderately hard, very slightly weathered to fresh, extremely to slightly fractured, fine grained, dark gray, SCHIST. Foliation is shallow angle. At 39.3 feet, moderately dipping fracture across foliation, smooth, iron stained. At 42.5 feet, steep angle fracture across foliation, smooth, iron stained. All other fractures are along foliation. RQD: 1.9 / 5.0 = 38%	
							Bottom of Exploration @ 44.0 ft (El. 305.7)	
							Note: There was a strong petroleum odor in the soil collected in S5 (20–21.3) feet. The odor was first detected at approximately 19 feet, when advancing the casing to 20.0 feet. The driller replaced recycled water with fresh water at 22 feet, then a strong odor of petroleum was again detected when coring bedrock at 34 feet.	

BORING LOGS
SCALE: 1/4" = 1'-0"

STATE OF NEW HAMPSHIRE
DEPARTMENT OF TRANSPORTATION * BUREAU OF BRIDGE DESIGN

TOWN LEBANON, NH - HARTFORD, VT BRIDGE NO. 058\128 STATE PROJECT 14957
LOCATION US ROUTE 4 over CONNECTICUT RIVER

BORING LOGS (7 OF 7)

REVISIONS AFTER PROPOSAL		BY	DATE		BY	DATE
	DESIGNED	NHDOT	---	CHECKED	NHDOT	---
	DRAWN	SMG	2/11	CHECKED	JWP	2/11
	QUANTITIES	---	---	CHECKED	---	---
	ISSUE DATE		FEDERAL PROJECT NO.		SHEET NO.	
	REV. DATE		----------		39	

BRIDGE SHEET 14 OF 71
FILE NUMBER 110-6-1
TOTAL SHEETS 157

SUBDIRECTORY	.DGN LOCATOR	SHEET SCALE
BRC/BRSITE	14957BoringLog	AS NOTED

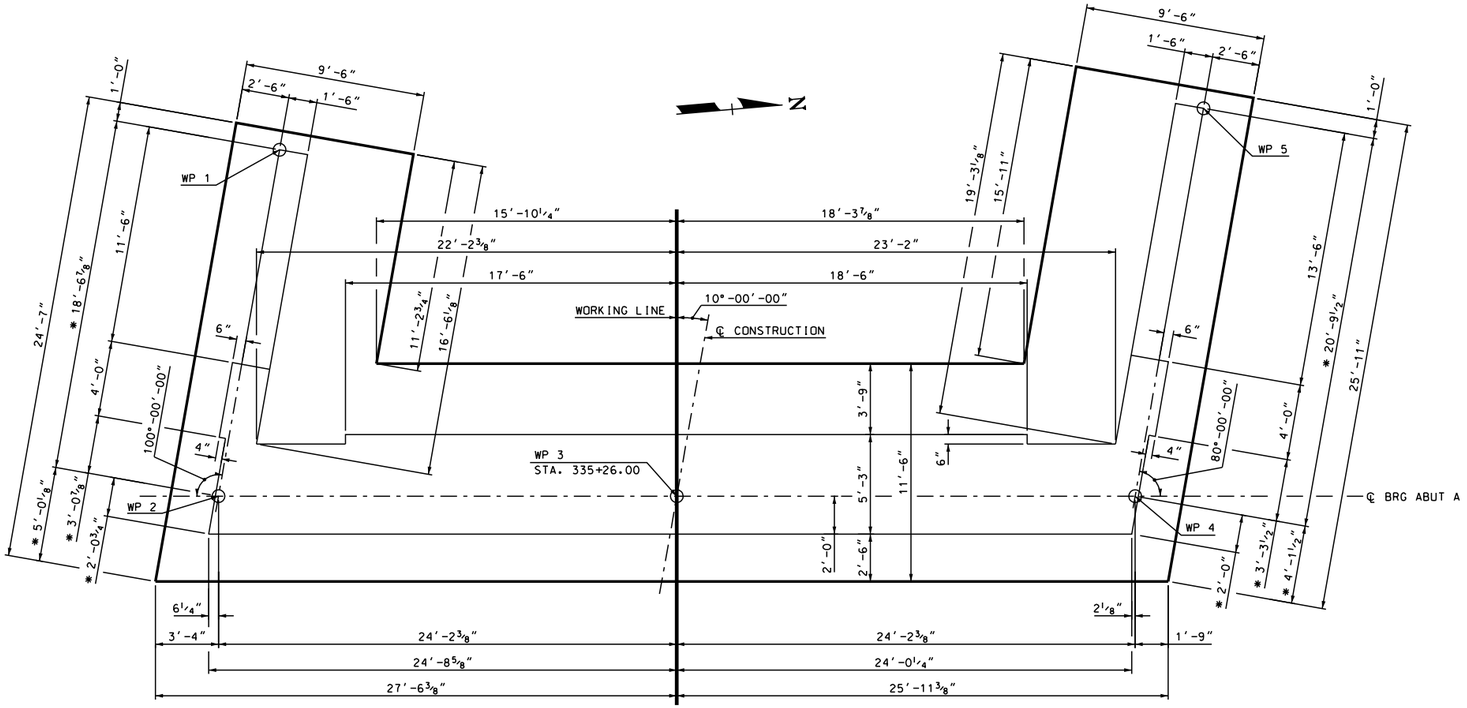

ABUTMENT A FOOTING MASONRY

SCALE: ¼" = 1'-0"

* = DIMENSIONS ARE FROM WP AT ℄ BEARING

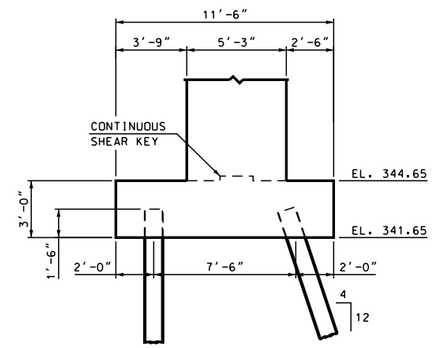

SECTION A-A

SCALE: ¼" = 1'-0"

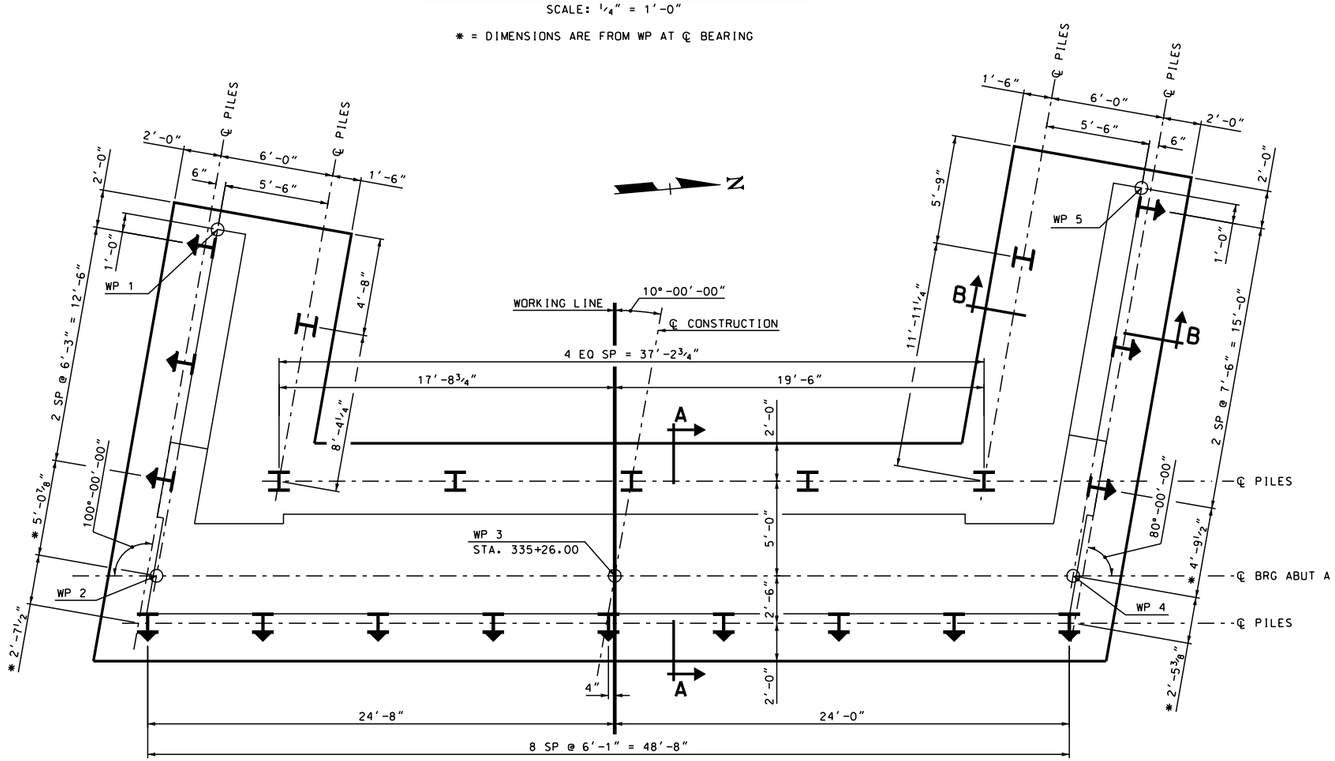

ABUTMENT A PILE LAYOUT

SCALE: ¼" = 1'-0"

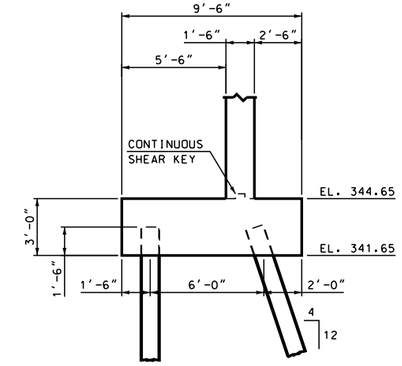

SECTION B-B

SCALE: ¼" = 1'-0"

PILE KEY

- HP12x53 BATTERED 4 HORIZONTAL TO 12 VERTICAL
- HP12x53 VERTICAL PILE

SUBDIRECTORY	.DGN LOCATOR	SHEET SCALE
BRC\ABUTA	14957Afoot	AS NOTED

STATE OF NEW HAMPSHIRE
DEPARTMENT OF TRANSPORTATION * BUREAU OF BRIDGE DESIGN

TOWN LEBANON, NH - HARTFORD, VT BRIDGE NO. 058\128 STATE PROJECT 14957

LOCATION US ROUTE 4 over CONNECTICUT RIVER

ABUTMENT A FOOTING MASONRY

REVISIONS AFTER PROPOSAL

	BY	DATE		BY	DATE
DESIGNED	JWP	12/11	CHECKED	MGL	2/13
DRAWN	SMG	12/11	CHECKED	MGL	2/13
QUANTITIES	JWP	2/13	CHECKED	PAB	2/13

ISSUE DATE
REV. DATE

FEDERAL PROJECT NO. ----------

SHEET NO. 40

BRIDGE SHEET 15 OF 71

FILE NUMBER 110-6-1

TOTAL SHEETS 157

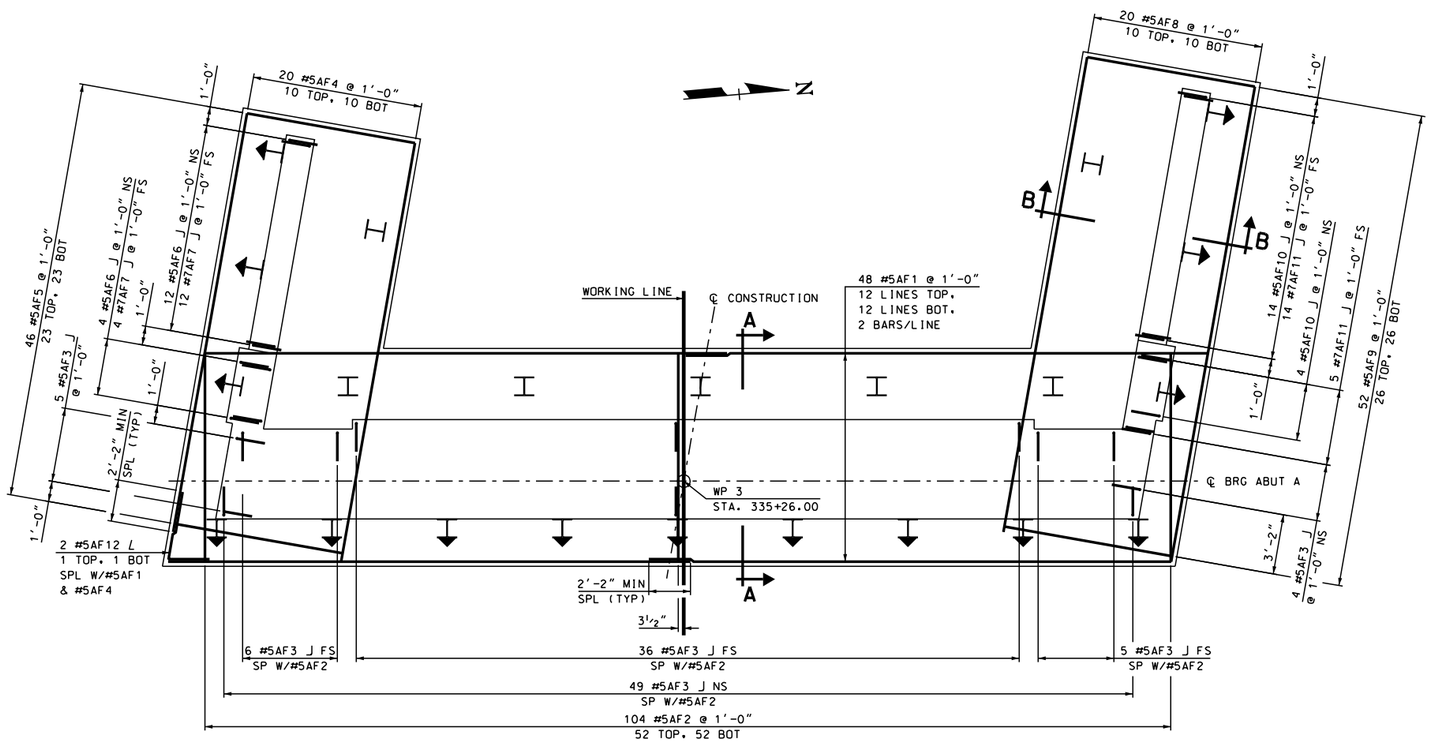

ABUTMENT A FOOTING REINFORCEMENT PLAN

SCALE: ¼" = 1'-0"

PILE KEY

- HP12x53 BATTERED 4 HORIZONTAL TO 12 VERTICAL
- HP12x53 VERTICAL PILE

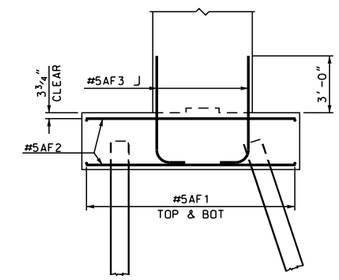

SECTION A-A

SCALE: ¼" = 1'-0"

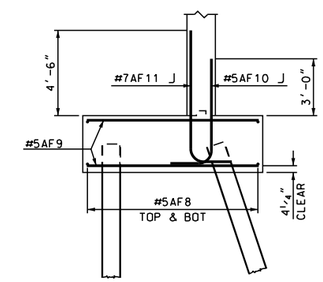

SECTION B-B

SCALE: ¼" = 1'-0"

SUBDIRECTORY	.DGN LOCATOR	SHEET SCALE
BRC\ABUTA	14957AfootRein	AS NOTED

STATE OF NEW HAMPSHIRE
DEPARTMENT OF TRANSPORTATION * BUREAU OF BRIDGE DESIGN

TOWN LEBANON, NH - HARTFORD, VT BRIDGE NO. 058\128 STATE PROJECT 14957

LOCATION US ROUTE 4 over CONNECTICUT RIVER

ABUTMENT A FOOTING REINFORCEMENT

REVISIONS AFTER PROPOSAL		BY	DATE		BY	DATE
	DESIGNED	JWP	12/11	CHECKED	MGL	2/13
	DRAWN	SMG	1/12	CHECKED	MGL	2/13
	QUANTITIES	JWP	2/13	CHECKED	PAB	2/13

ISSUE DATE	FEDERAL PROJECT NO.	SHEET NO.	TOTAL SHEETS
REV. DATE	----------	41	157

BRIDGE SHEET 16 OF 71

FILE NUMBER 110-6-1

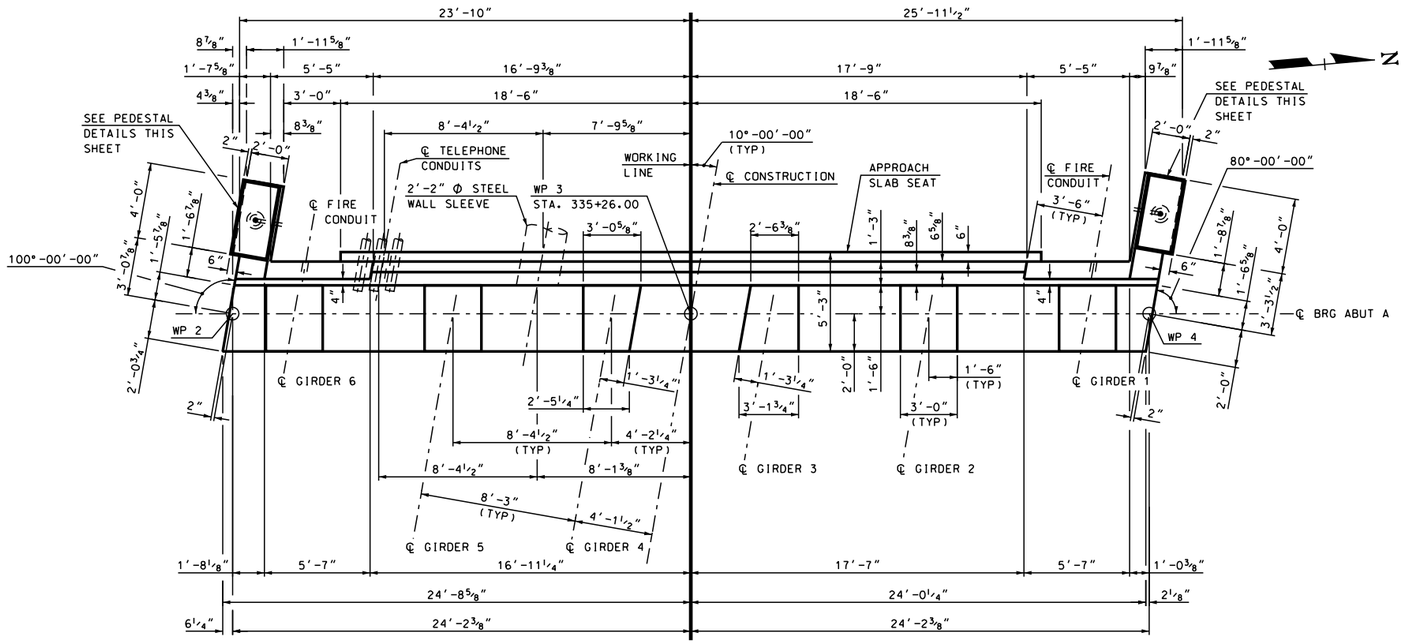

ABUTMENT A PLAN VIEW

SCALE: ¼" = 1'-0"

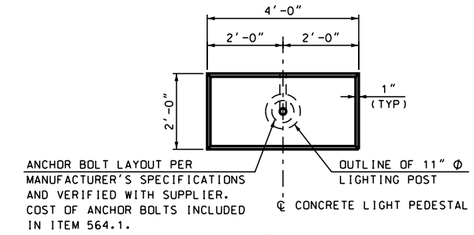

PLAN

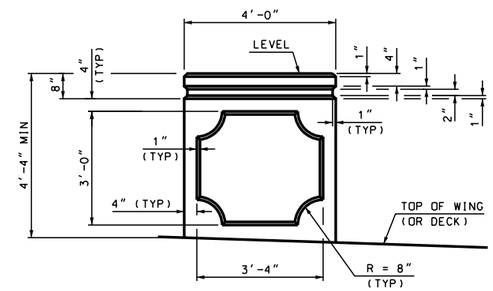

ELEVATION

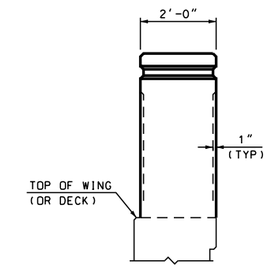

SIDE

PEDESTAL DETAILS

SCALE: ½" = 1'-0"

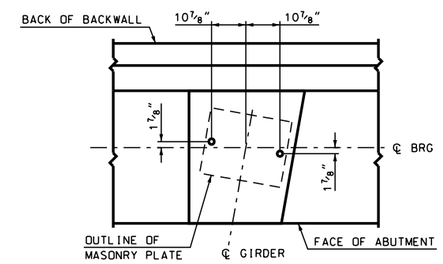

ANCHOR BOLT LAYOUT
ABUTMENT A (EXP)

SCALE: ½" = 1'-0"

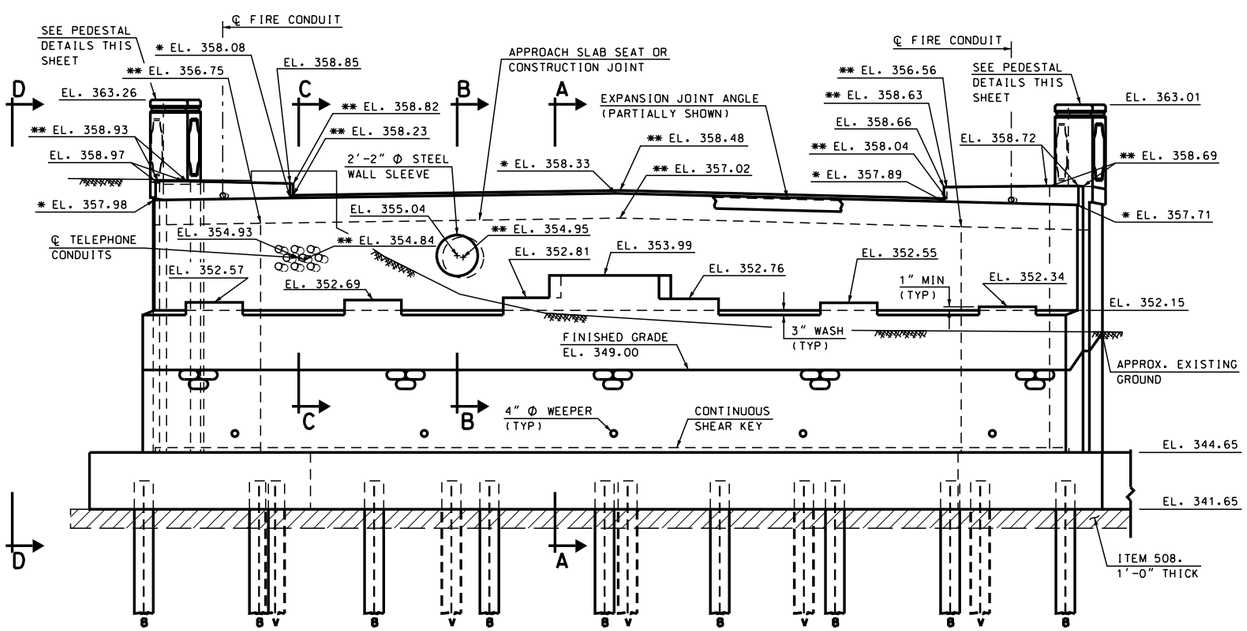

* = ELEVATION GIVEN AT FRONT FACE OF BACKWALL
** = ELEVATION GIVEN AT BACK FACE OF BACKWALL

ABUTMENT A ELEVATION VIEW

SCALE: ¼" = 1'-0"

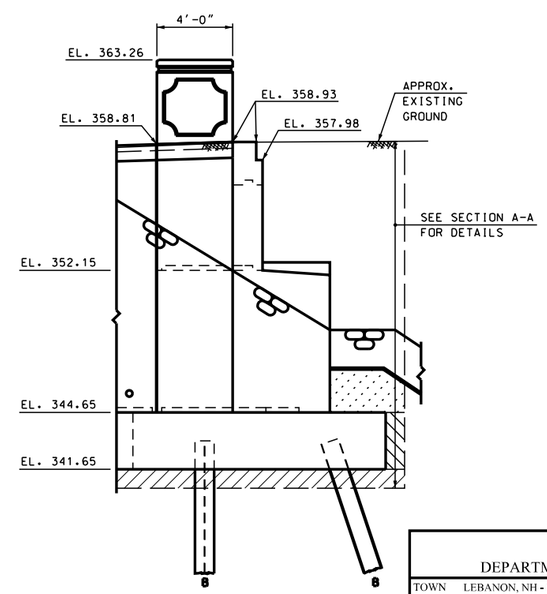

VIEW D-D

SCALE: ¼" = 1'-0"

KEY

HP12x53 BATTERED PILE

HP12x53 VERTICAL PILE

NOTE:
FOR SECTIONS A-A, B-B, & C-C, SEE BRIDGE SHEET 18.

STATE OF NEW HAMPSHIRE
DEPARTMENT OF TRANSPORTATION * BUREAU OF BRIDGE DESIGN

TOWN LEBANON, NH - HARTFORD, VT BRIDGE NO. 058\128 STATE PROJECT 14957

LOCATION US ROUTE 4 over CONNECTICUT RIVER

ABUTMENT A MASONRY

REVISIONS AFTER PROPOSAL		BY	DATE		BY	DATE
	DESIGNED	JWP	12/11	CHECKED	MGL	2/13
	DRAWN	SMG	12/11	CHECKED	MGL	2/13
	QUANTITIES	JWP	2/13	CHECKED	PAB	2/13
	ISSUE DATE		FEDERAL PROJECT NO.		SHEET NO.	
	REV. DATE		----------		42	

BRIDGE SHEET 17 OF 71

FILE NUMBER 110-6-1

TOTAL SHEETS 157

SUBDIRECTORY	.DGN LOCATOR	SHEET SCALE
BRC\ABUTA	14957AbutA	AS NOTED

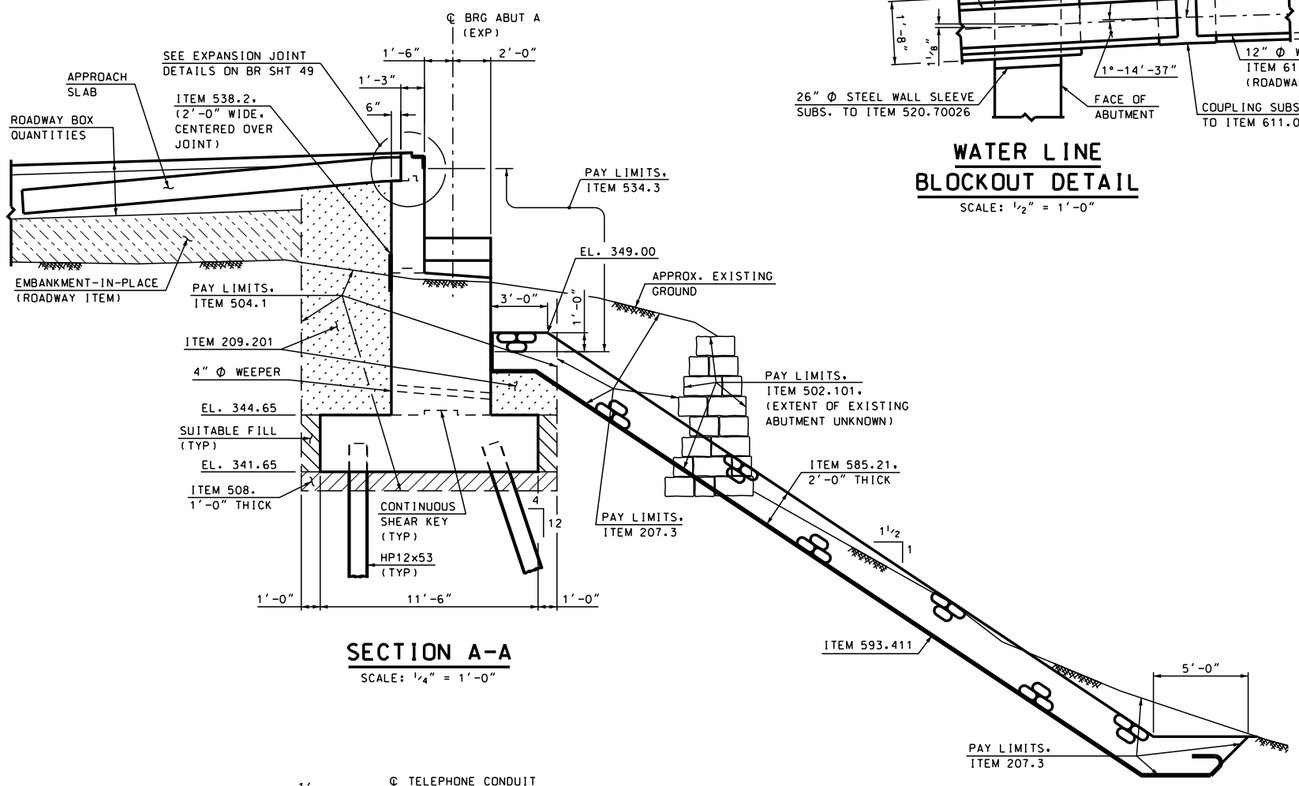

SECTION A-A

SCALE: 1/4" = 1'-0"

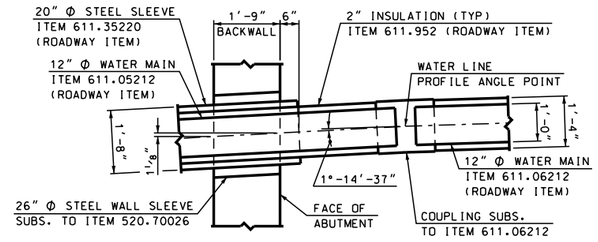

WATER LINE BLOCKOUT DETAIL

SCALE: 1/2" = 1'-0"

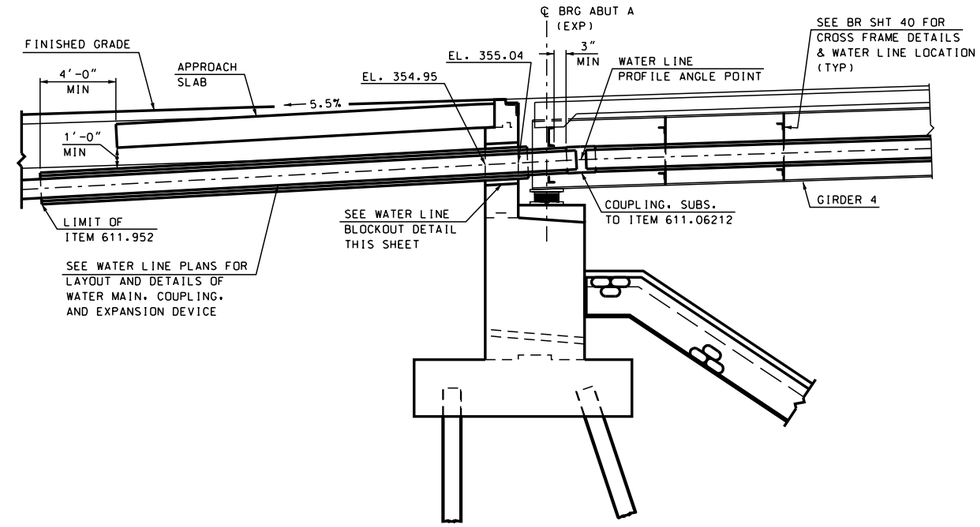

SECTION B-B

SCALE: 1/4" = 1'-0"

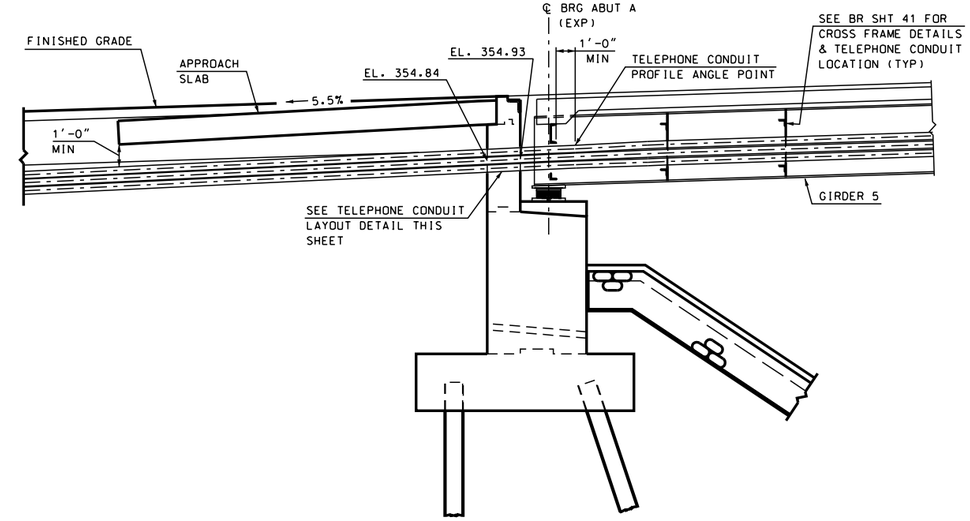

SECTION C-C

SCALE: 1/4" = 1'-0"

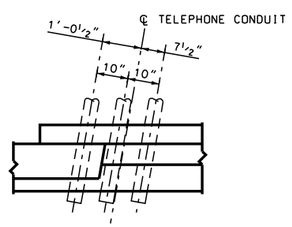

PLAN

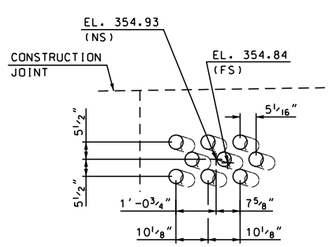

ELEVATION

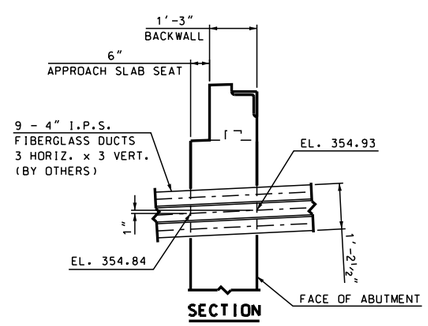

SECTION

TELEPHONE CONDUIT LAYOUT DETAIL

SCALE: 1/2" = 1'-0"

NOTE:
FOR LOCATIONS OF SECTIONS A-A, B-B, & C-C, SEE BRIDGE SHEET 17.

STATE OF NEW HAMPSHIRE
DEPARTMENT OF TRANSPORTATION * BUREAU OF BRIDGE DESIGN

TOWN LEBANON, NH - HARTFORD, VT BRIDGE NO. 058\128 STATE PROJECT 14957
LOCATION US ROUTE 4 over CONNECTICUT RIVER

ABUTMENT A SECTIONS & UTILITY DETAILS

BRIDGE SHEET 18 OF 71

REVISIONS AFTER PROPOSAL		BY	DATE		BY	DATE
	DESIGNED	JWP	12/11	CHECKED	MGL	2/13
	DRAWN	SMG	12/11	CHECKED	MGL	2/13
	QUANTITIES	JWP	2/13	CHECKED	PAB	2/13

FILE NUMBER 110-6-1

SUBDIRECTORY	.DGN LOCATOR	SHEET SCALE
BRC\ABUTA	14957AbutA	AS NOTED

ISSUE DATE	FEDERAL PROJECT NO.	SHEET NO.	TOTAL SHEETS
REV. DATE	----------	43	157

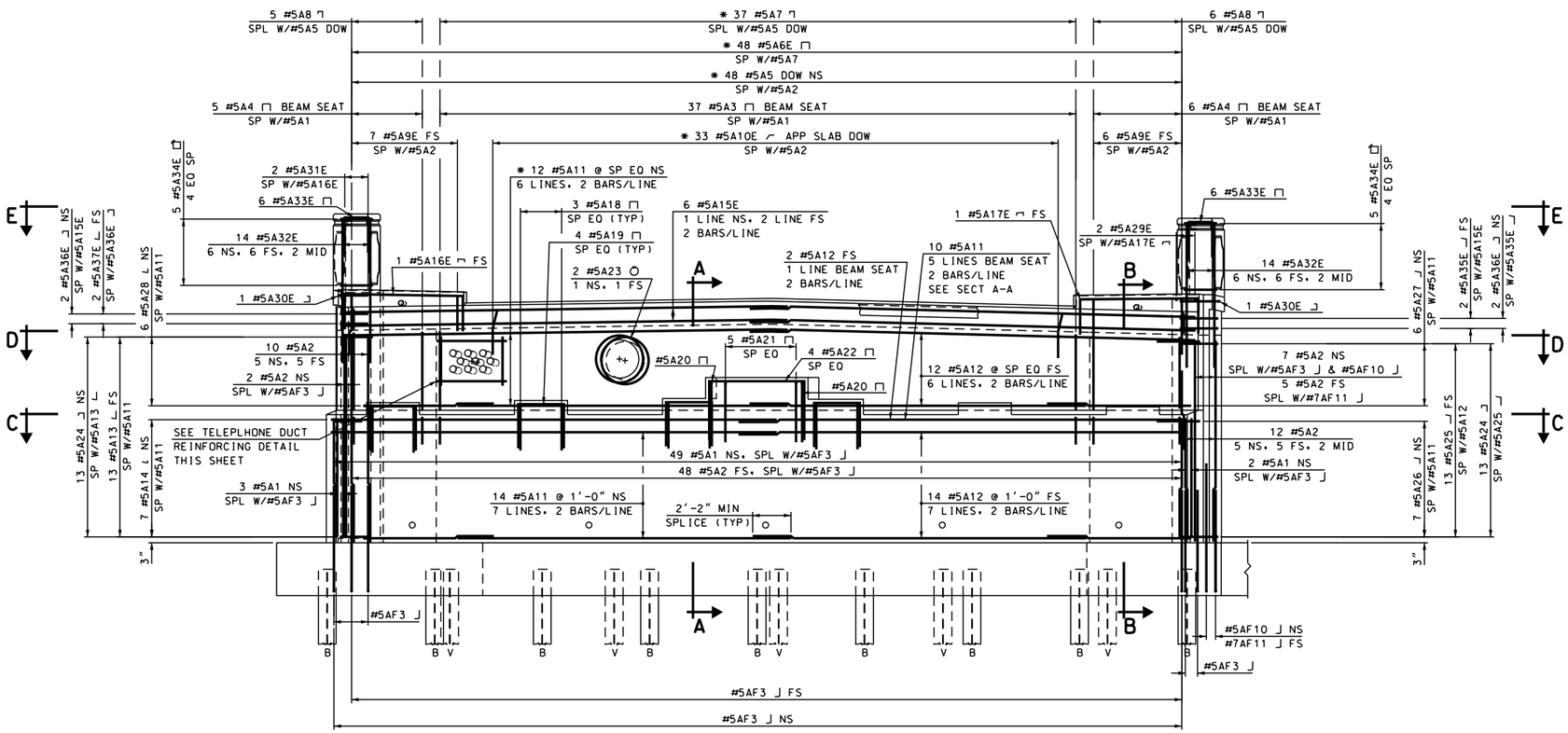

* = CUT TO FIT IN AREAS OF UTILITY BLOCKOUT AND CONDUITS.

ABUTMENT A REINFORCEMENT

SCALE: 1/4" = 1'-0"

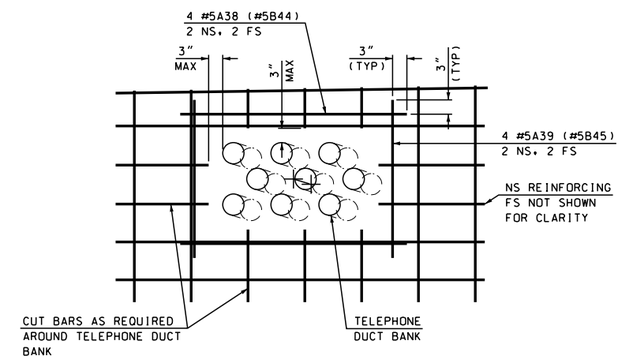

TELEPHONE DUCT REINFORCING DETAIL

(ABUTMENT A SHOWN, ABUTMENT B SIMILAR)
SCALE: 3/4" = 1'-0"

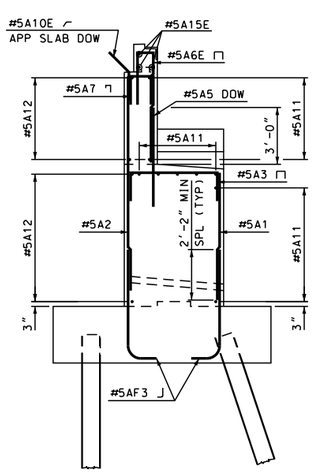

SECTION A-A

SCALE: 1/4" = 1'-0"

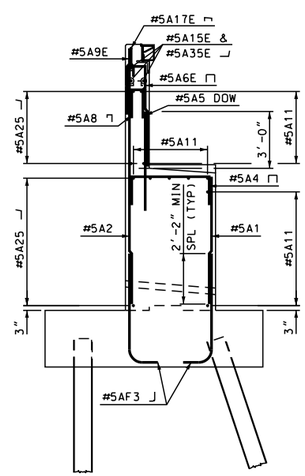

SECTION B-B

SCALE: 1/4" = 1'-0"

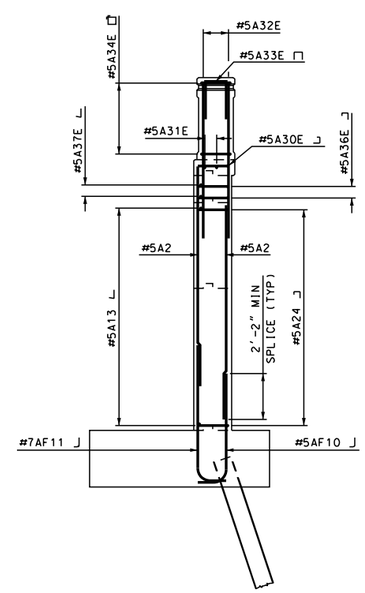

SECTION F-F

SCALE: 1/4" = 1'-0"

FOR SECTIONS C-C, D-D, E-E, AND LOCATION OF SECTION F-F.
SEE BRIDGE SHEET 20.

STATE OF NEW HAMPSHIRE
DEPARTMENT OF TRANSPORTATION * BUREAU OF BRIDGE DESIGN

TOWN LEBANON, NH - HARTFORD, VT | BRIDGE NO. 058\128 | STATE PROJECT 14957

LOCATION US ROUTE 4 over CONNECTICUT RIVER

ABUTMENT A REINFORCEMENT (1 OF 2)

REVISIONS AFTER PROPOSAL		BY	DATE		BY	DATE
	DESIGNED	JWP	12/11	CHECKED	MGL	2/13
	DRAWN	SMG	12/11	CHECKED	MGL	2/13
	QUANTITIES	JWP	2/13	CHECKED	MGL	2/13

SUBDIRECTORY	.DGN LOCATOR	SHEET SCALE	ISSUE DATE	FEDERAL PROJECT NO.	SHEET NO.	TOTAL SHEETS
BRC\ABUTA	14957Arebar	AS NOTED	REV. DATE	----------	44	157

BRIDGE SHEET 19 OF 71

FILE NUMBER 110-6-1

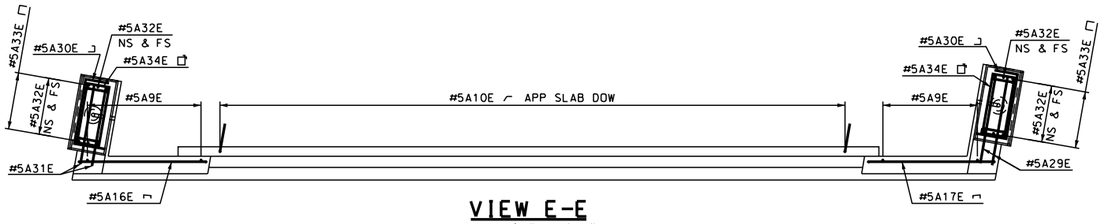

VIEW E-E

SCALE: 1/4" = 1'-0"

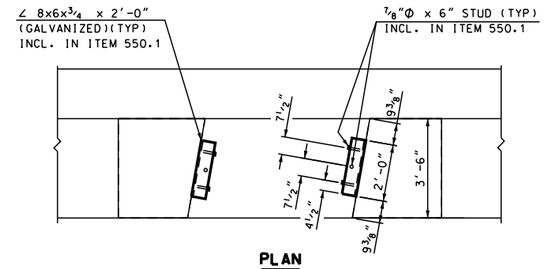

PLAN

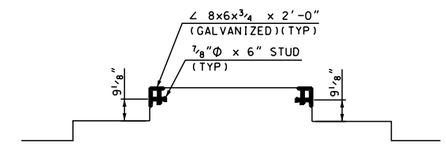

SECTION

KEEPER PLATES

SCALE: 3/8" = 1'-0"

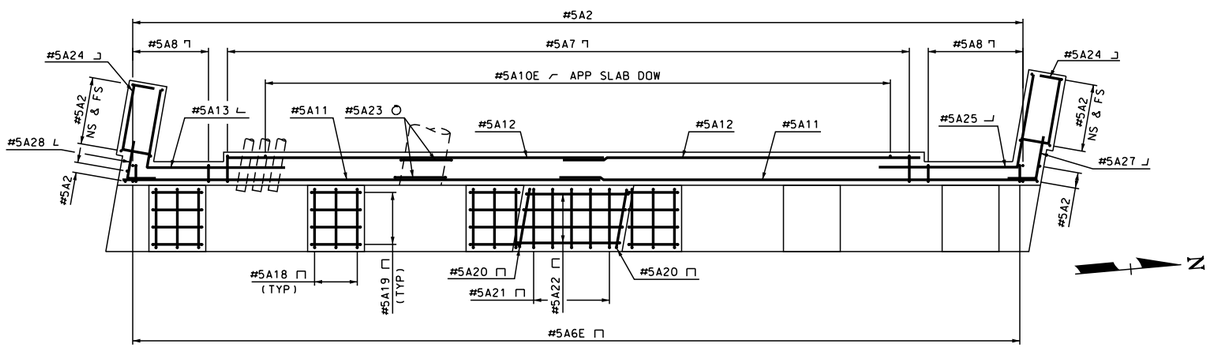

SECTION D-D

SCALE: 1/4" = 1'-0"

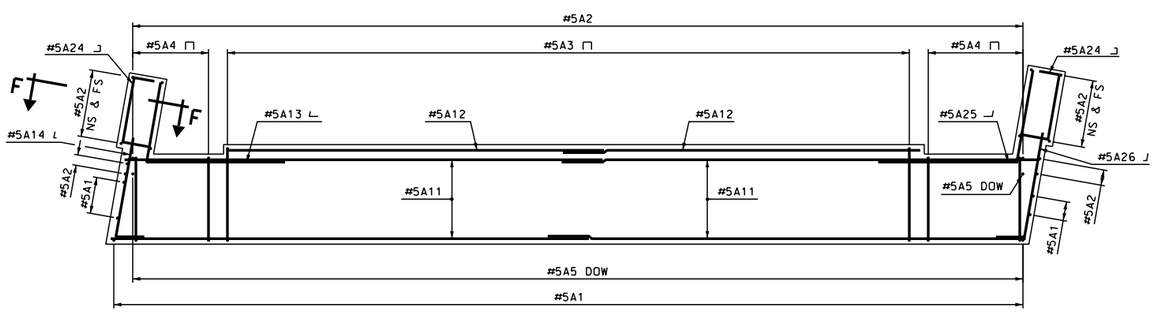

SECTION C-C

(PEDESTAL REINFORCING NOT SHOWN FOR CLARITY)

SCALE: 1/4" = 1'-0"

FOR LOCATION OF SECTIONS C-C, D-D, E-E, AND SECTION F-F,
SEE BRIDGE SHEET 19.

STATE OF NEW HAMPSHIRE

DEPARTMENT OF TRANSPORTATION * BUREAU OF BRIDGE DESIGN

TOWN LEBANON, NH - HARTFORD, VT BRIDGE NO. 058\128 STATE PROJECT 14957

LOCATION US ROUTE 4 over CONNECTICUT RIVER

ABUTMENT A REINFORCEMENT (2 OF 2)

REVISIONS AFTER PROPOSAL		BY	DATE		BY	DATE
	DESIGNED	JWP	12/11	CHECKED	MGL	2/13
	DRAWN	SMG	12/11	CHECKED	MGL	2/13
	QUANTITIES	JWP	2/13	CHECKED	MGL	2/13

SUBDIRECTORY	.DGN LOCATOR	SHEET SCALE	ISSUE DATE	FEDERAL PROJECT NO.	SHEET NO.	TOTAL SHEETS
BRC\ABUTA	14957Arebar	AS NOTED	REV. DATE	----------	45	157

BRIDGE SHEET 20 OF 71

FILE NUMBER 110-6-1

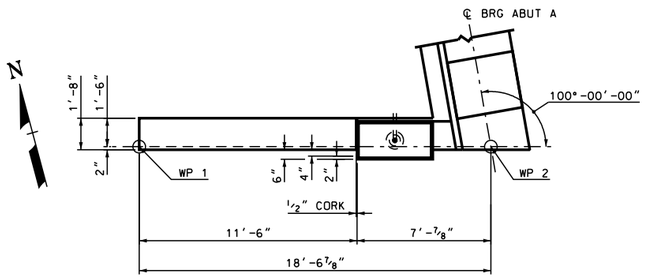

SW WING PLAN

SCALE: 1/4" = 1'-0"

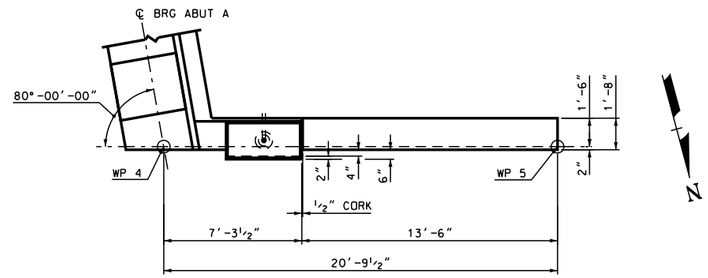

NW WING PLAN

SCALE: 1/4" = 1'-0"

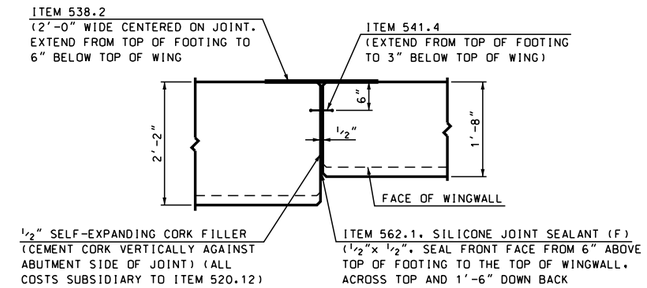

TYPICAL WING JOINT

SCALE: 3/4" = 1'-0"

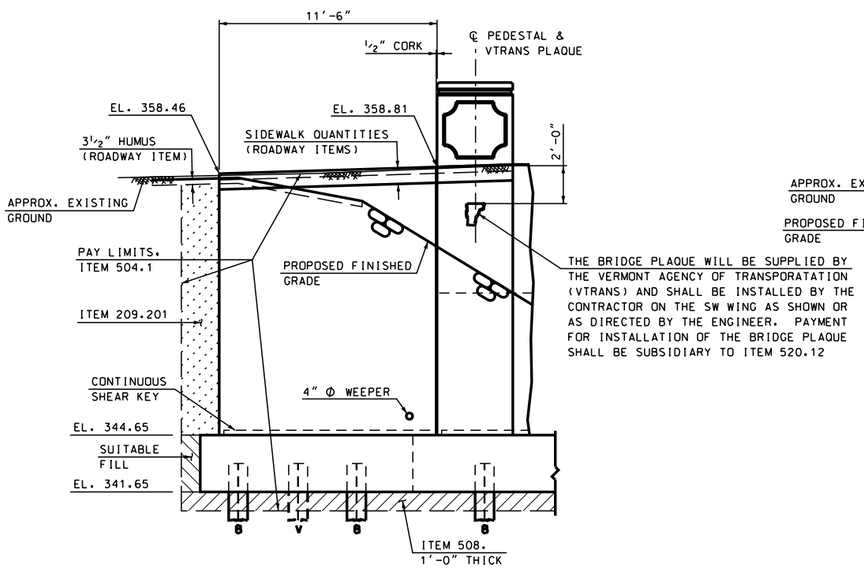

SW WING ELEVATION

SCALE: 1/4" = 1'-0"

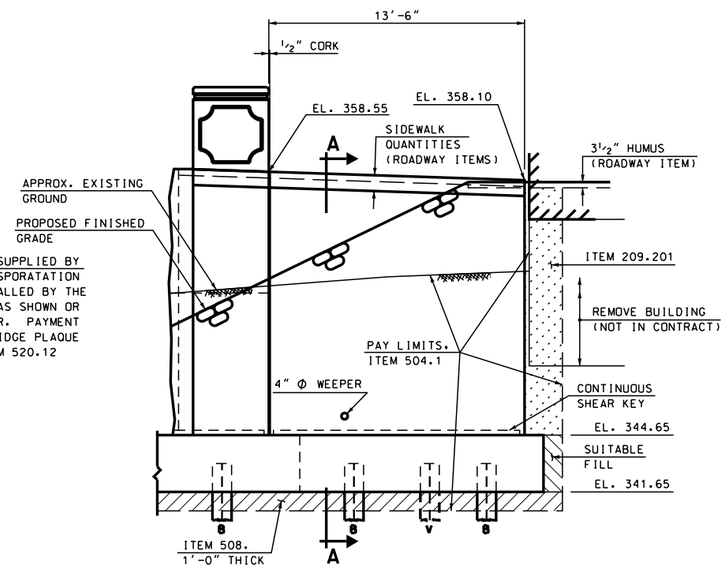

NW WING ELEVATION

SCALE: 1/4" = 1'-0"

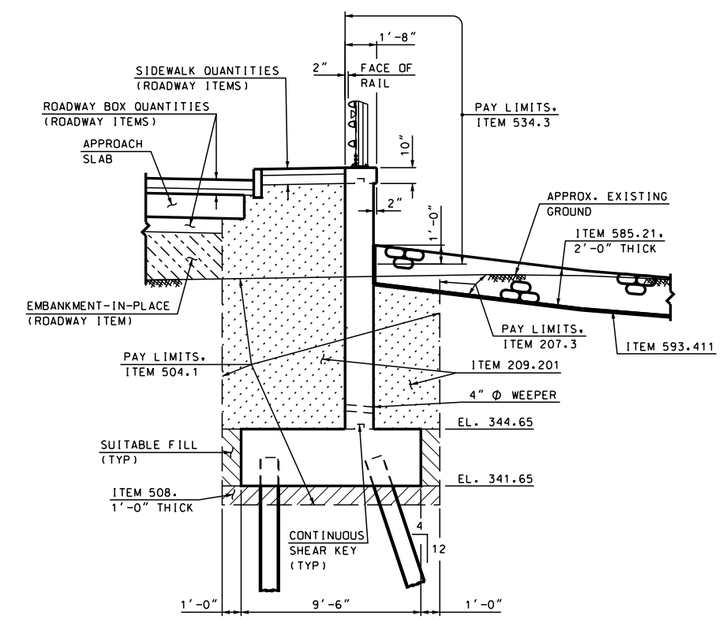

SECTION A-A

SCALE: 1/4" = 1'-0"

STATE OF NEW HAMPSHIRE
DEPARTMENT OF TRANSPORTATION * BUREAU OF BRIDGE DESIGN

TOWN LEBANON, NH - HARTFORD, VT BRIDGE NO. 058\128 STATE PROJECT 14957

LOCATION US ROUTE 4 over CONNECTICUT RIVER

ABUTMENT A WING MASONRY

BRIDGE SHEET 21 OF 71

REVISIONS AFTER PROPOSAL

	BY	DATE		BY	DATE
DESIGNED	JWP	12/11	CHECKED	MGL	2/13
DRAWN	SMG	12/11	CHECKED	MGL	2/13
QUANTITIES	JWP	2/13	CHECKED	PAB	2/13

FILE NUMBER 110-6-1

SUBDIRECTORY	.DGN LOCATOR	SHEET SCALE
BRC\ABUTA	14957Awing	AS NOTED

ISSUE DATE
REV. DATE

FEDERAL PROJECT NO. ----------

SHEET NO. 46

TOTAL SHEETS 157

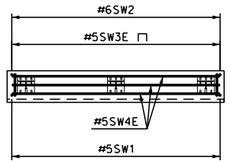

SW WING REINFORCEMENT PLAN

SCALE: 1/4" = 1'-0"

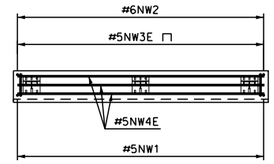

NW WING REINFORCEMENT PLAN

SCALE: 1/4" = 1'-0"

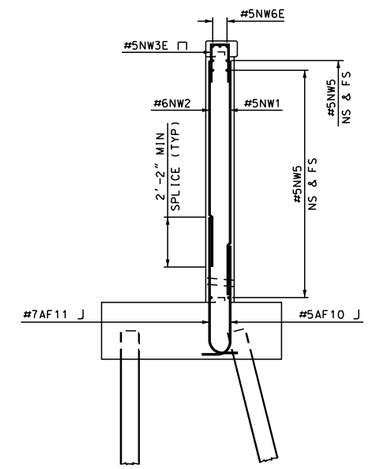

SECTION B-B

SCALE: 1/4" = 1'-0"

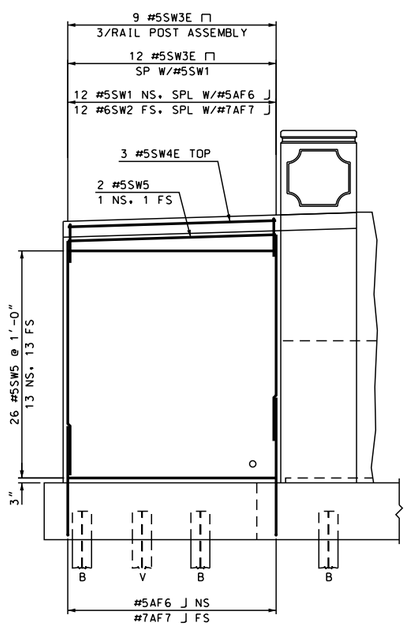

SW WING REINFORCEMENT

SCALE: 1/4" = 1'-0"

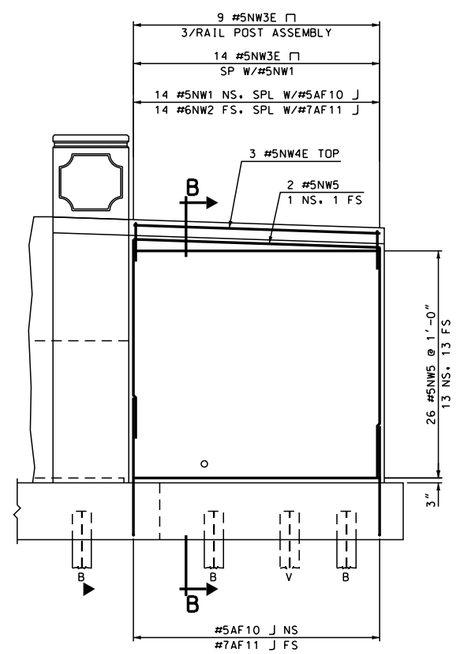

NW WING REINFORCEMENT

SCALE: 1/4" = 1'-0"

STATE OF NEW HAMPSHIRE

DEPARTMENT OF TRANSPORTATION * BUREAU OF BRIDGE DESIGN

TOWN LEBANON, NH - HARTFORD, VT BRIDGE NO. 058\128 STATE PROJECT 14957

LOCATION US ROUTE 4 over CONNECTICUT RIVER

ABUTMENT A WING REINFORCEMENT

BRIDGE SHEET 22 OF 71

FILE NUMBER 110-6-1

REVISIONS AFTER PROPOSAL		BY	DATE		BY	DATE
	DESIGNED	JWP	12/11	CHECKED	MGL	2/13
	DRAWN	SMG	12/11	CHECKED	MGL	2/13
	QUANTITIES	JWP	2/13	CHECKED	MGL	2/13

SUBDIRECTORY	.DGN LOCATOR	SHEET SCALE	ISSUE DATE	FEDERAL PROJECT NO.	SHEET NO.	TOTAL SHEETS
BRC\ABUTA	14957Awing	AS NOTED	REV. DATE	----------	47	157

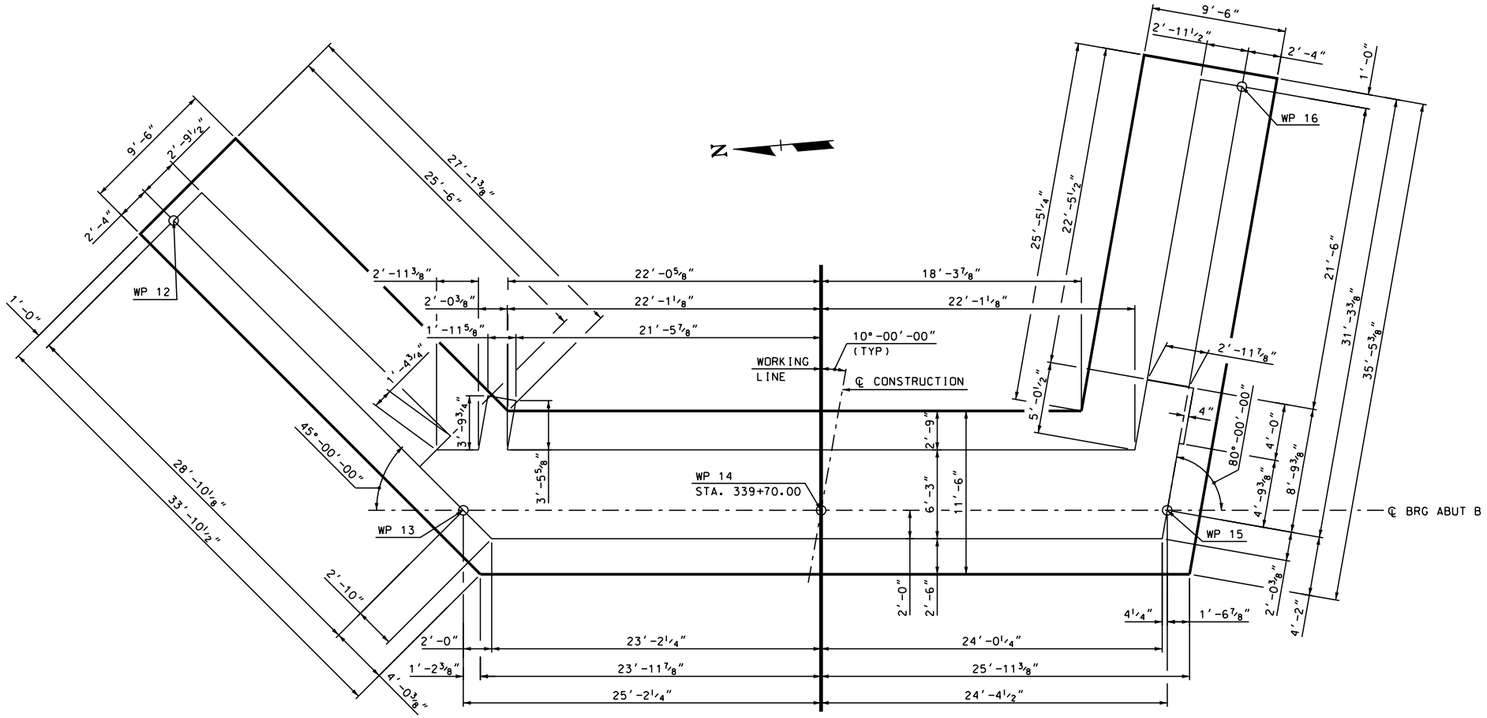

ABUTMENT B FOOTING MASONRY

SCALE: 3/16" = 1'-0"

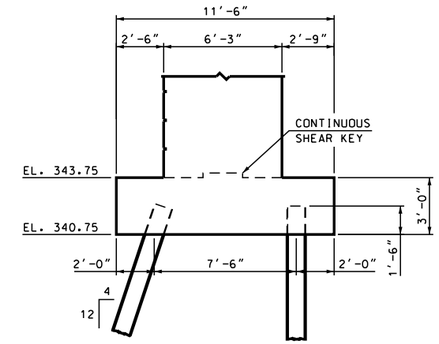

SECTION A-A

SCALE: 1/4" = 1'-0"

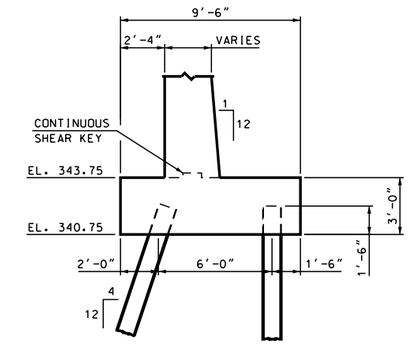

SECTION B-B

SCALE: 1/4" = 1'-0"

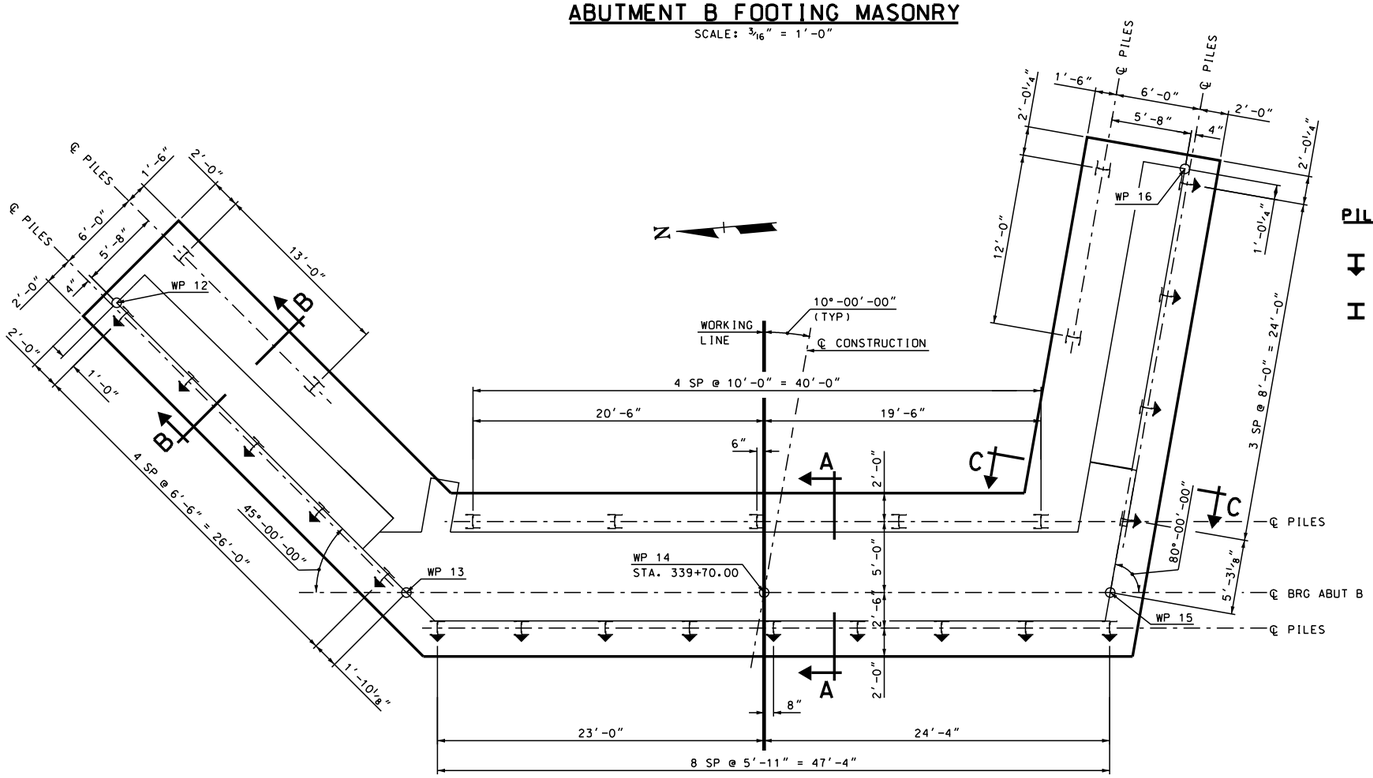

ABUTMENT B PILE LAYOUT

SCALE: 3/16" = 1'-0"

PILE KEY

- HP12x53 BATTERED 4 HORIZONTAL TO 12 VERTICAL
- HP12x53 VERTICAL PILE

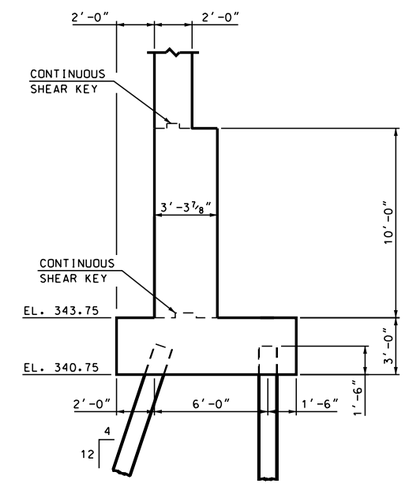

SECTION C-C

SCALE: 1/4" = 1'-0"

SUBDIRECTORY	.DGN LOCATOR	SHEET SCALE
BRC\ABUTB	14957Bfoot	AS NOTED

STATE OF NEW HAMPSHIRE
DEPARTMENT OF TRANSPORTATION * BUREAU OF BRIDGE DESIGN

TOWN LEBANON, NH - HARTFORD, VT | BRIDGE NO. 058\128 | STATE PROJECT 14957

LOCATION US ROUTE 4 over CONNECTICUT RIVER

ABUTMENT B FOOTING MASONRY

REVISIONS AFTER PROPOSAL		BY	DATE		BY	DATE
	DESIGNED	JWP	12/11	CHECKED	MGL	2/13
	DRAWN	SMG	12/11	CHECKED	MGL	2/13
	QUANTITIES	JWP	2/13	CHECKED	PAB	2/13
	ISSUE DATE		FEDERAL PROJECT NO.		SHEET NO.	
	REV. DATE		----------		48	

BRIDGE SHEET 23 OF 71

FILE NUMBER 110-6-1

TOTAL SHEETS 157

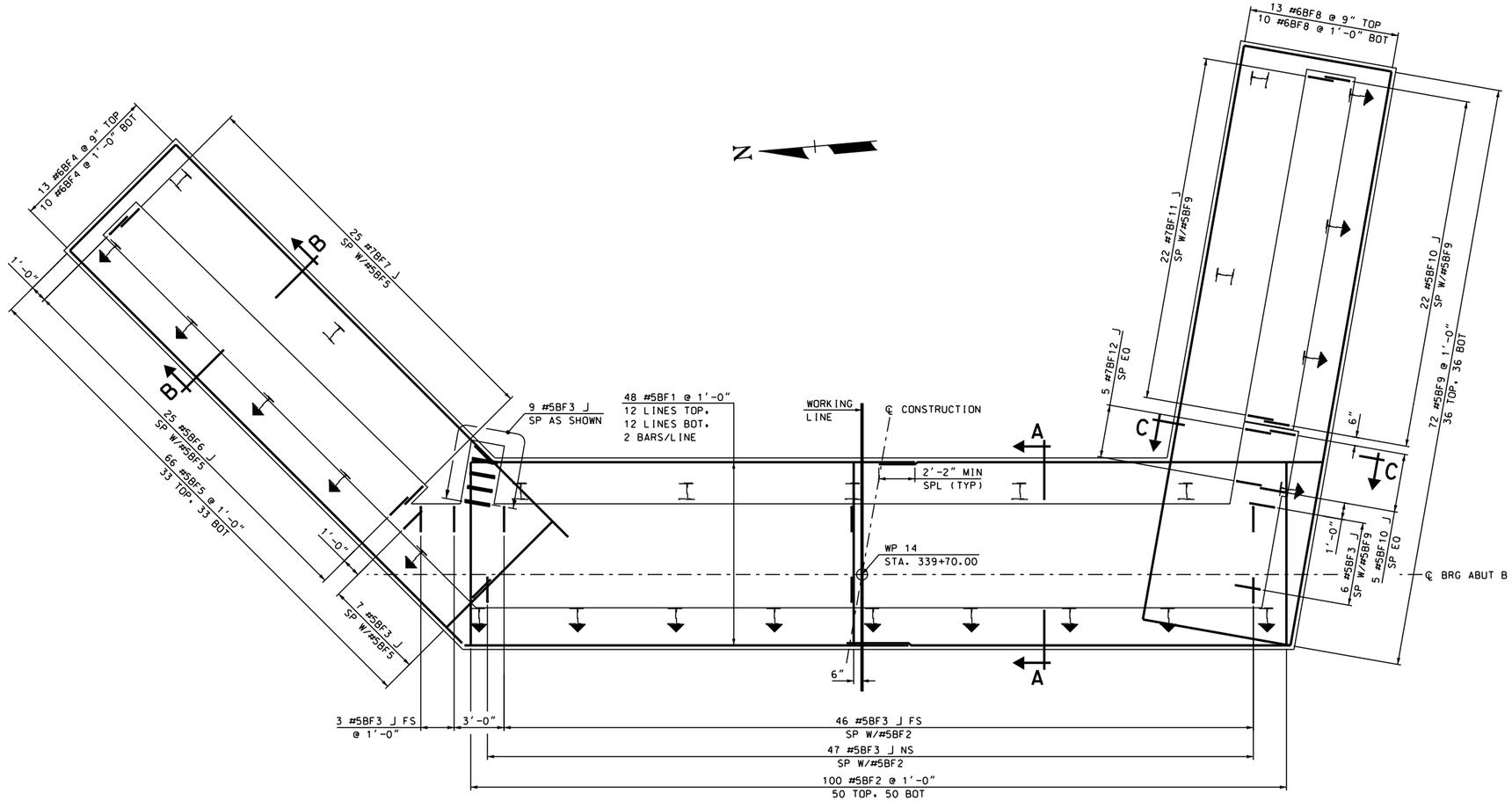

ABUTMENT B FOOTING REINFORCEMENT PLAN

SCALE: 1/4" = 1'-0"

PILE KEY

- HP12x53 BATTERED 4 HORIZONTAL TO 12 VERTICAL
- HP12x53 VERTICAL PILE

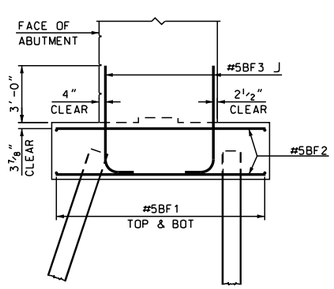

SECTION A-A

SCALE: 1/4" = 1'-0"

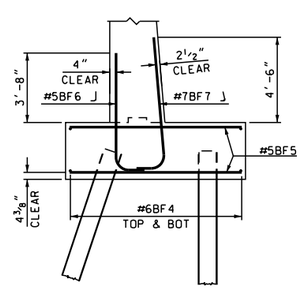

SECTION B-B

SCALE: 1/4" = 1'-0"

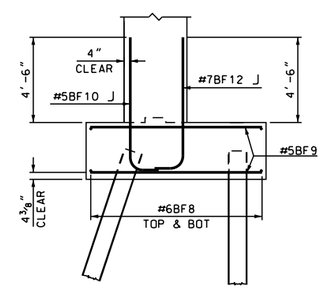

SECTION C-C

SCALE: 1/4" = 1'-0"

STATE OF NEW HAMPSHIRE
DEPARTMENT OF TRANSPORTATION * BUREAU OF BRIDGE DESIGN

TOWN LEBANON, NH - HARTFORD, VT BRIDGE NO. 058\128 STATE PROJECT 14957

LOCATION US ROUTE 4 over CONNECTICUT RIVER

ABUTMENT B FOOTING REINFORCEMENT

REVISIONS AFTER PROPOSAL		BY	DATE		BY	DATE
	DESIGNED	JWP	12/11	CHECKED	MGL	2/13
	DRAWN	SMG	2/12	CHECKED	MGL	2/13
	QUANTITIES	JWP	2/13	CHECKED	MGL	2/13

SUBDIRECTORY	.DGN LOCATOR	SHEET SCALE
BRC\ABUTB	14957BfootRein	AS NOTED

ISSUE DATE		FEDERAL PROJECT NO.	SHEET NO.	TOTAL SHEETS
REV. DATE		----------	49	157

BRIDGE SHEET 24 OF 71

FILE NUMBER 110-6-1

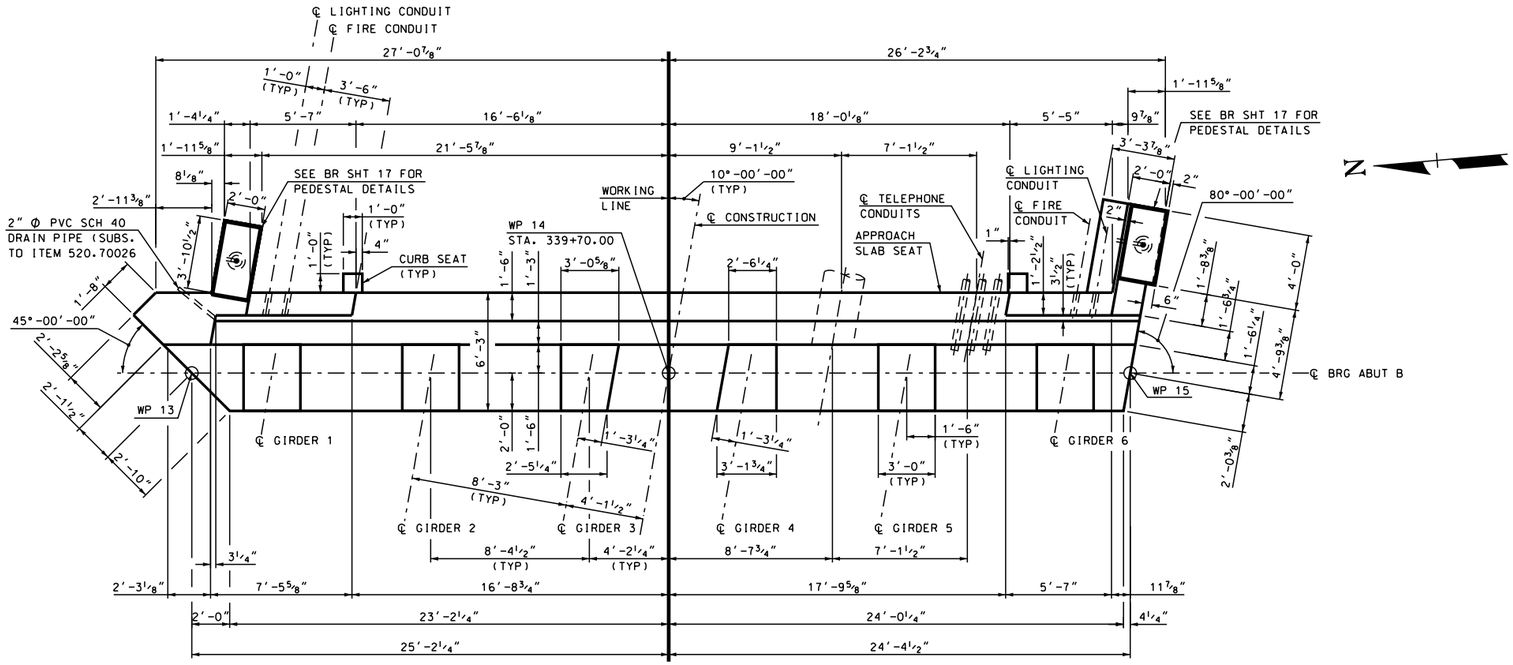

ABUTMENT B PLAN VIEW

SCALE: 1/4" = 1'-0"

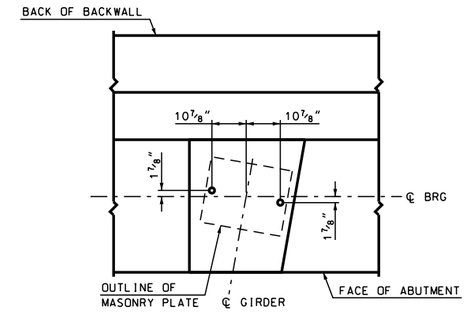

ANCHOR BOLT LAYOUT
ABUTMENT B (EXP)

SCALE: 1/2" = 1'-0"

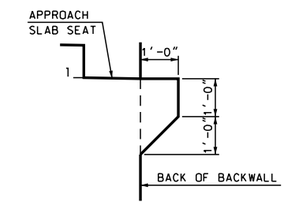

CURB SEAT DETAIL

SCALE: 1/2" = 1'-0"

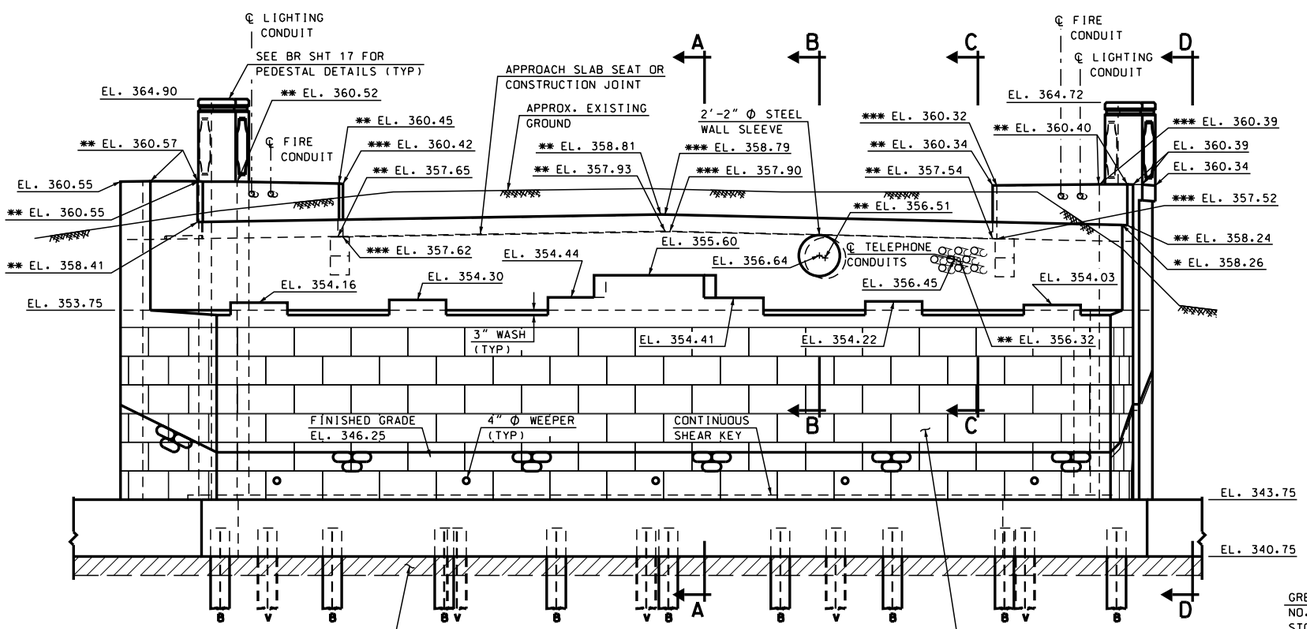

ABUTMENT B ELEVATION VIEW

SCALE: 1/4" = 1'-0"

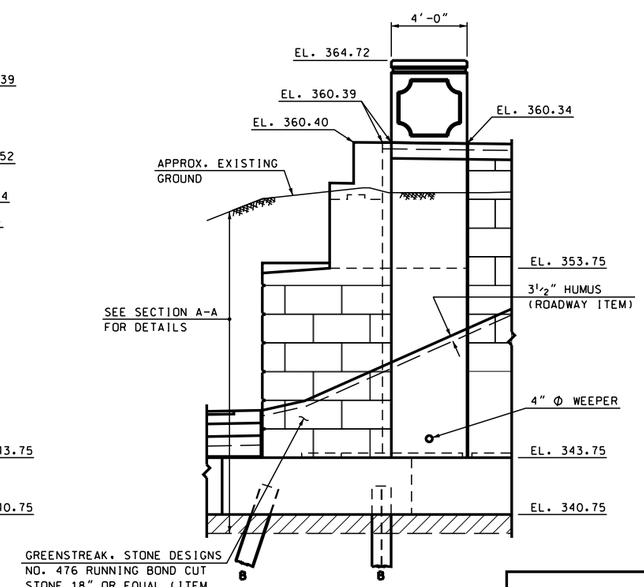

VIEW D-D

SCALE: 1/4" = 1'-0"

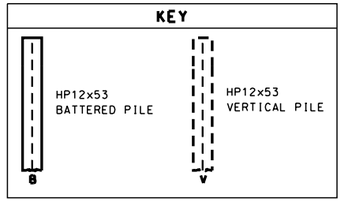

NOTE:
FOR SECTIONS A-A, B-B, & C-C
SEE BRIDGE SHEET 26.

SUBDIRECTORY	.DGN LOCATOR	SHEET SCALE
BRC\ABUTB	14957AbutB	AS NOTED

STATE OF NEW HAMPSHIRE
DEPARTMENT OF TRANSPORTATION * BUREAU OF BRIDGE DESIGN

TOWN LEBANON, NH - HARTFORD, VT BRIDGE NO. 058\128 STATE PROJECT 14957

LOCATION US ROUTE 4 over CONNECTICUT RIVER

ABUTMENT B MASONRY

REVISIONS AFTER PROPOSAL		BY	DATE		BY	DATE
	DESIGNED	JWP	12/11	CHECKED	MGL	2/13
	DRAWN	SMG	2/12	CHECKED	MGL	2/13
	QUANTITIES	JWP	2/13	CHECKED	PAB	2/13

ISSUE DATE	FEDERAL PROJECT NO.	SHEET NO.	TOTAL SHEETS
REV. DATE	----------	50	157

BRIDGE SHEET 25 OF 71

FILE NUMBER 110-6-1

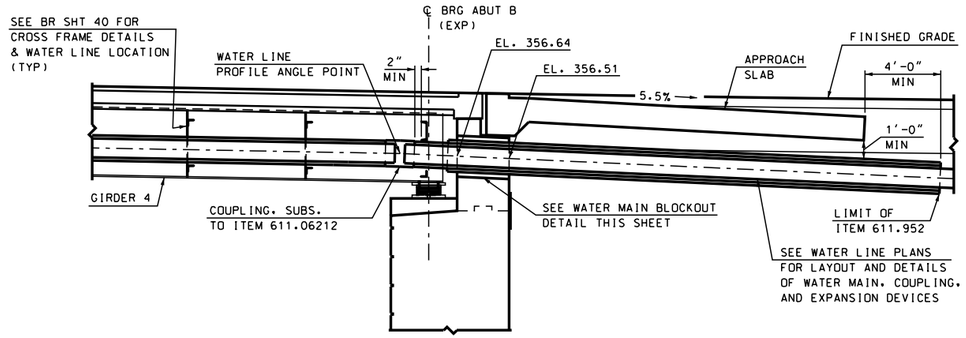

SECTION B-B

SCALE: 1/4" = 1'-0"

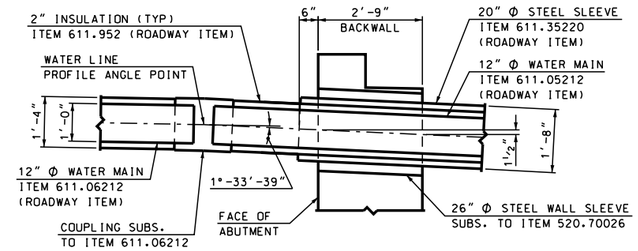

WATER LINE BLOCKOUT DETAIL

SCALE: 1/2" = 1'-0"

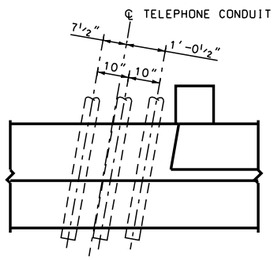

PLAN

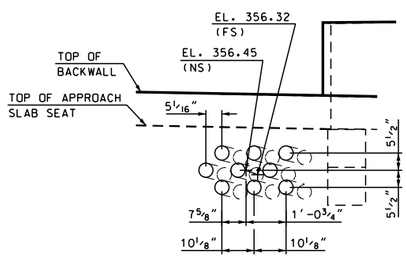

ELEVATION

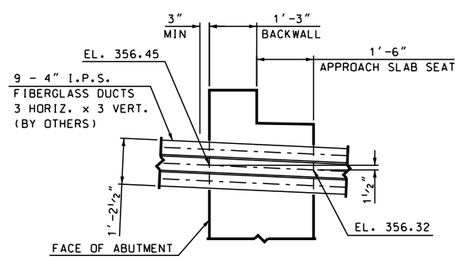

SECTION

TELEPHONE CONDUIT LAYOUT DETAIL

SCALE: 1/2" = 1'-0"

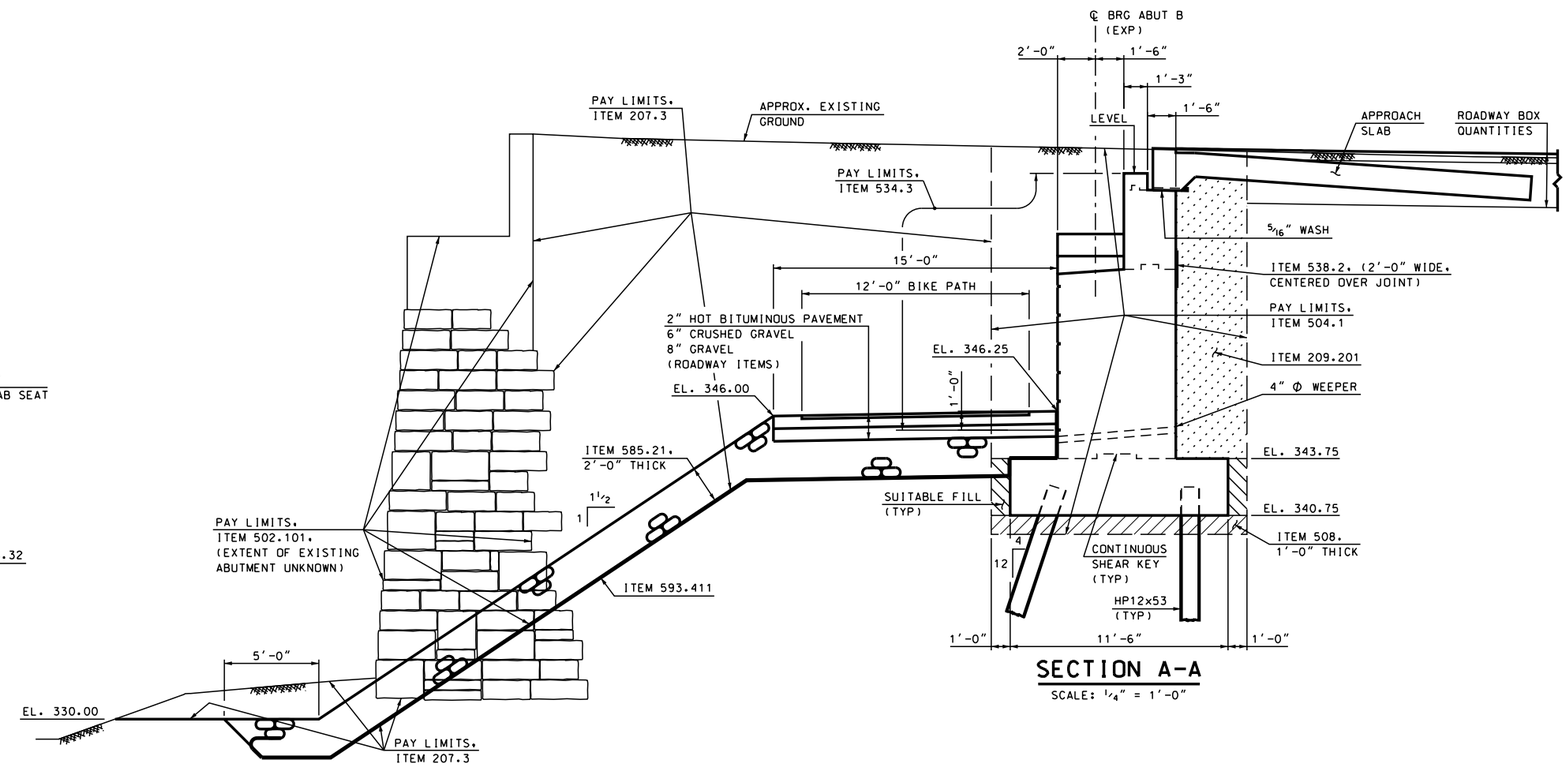

SECTION A-A

SCALE: 1/4" = 1'-0"

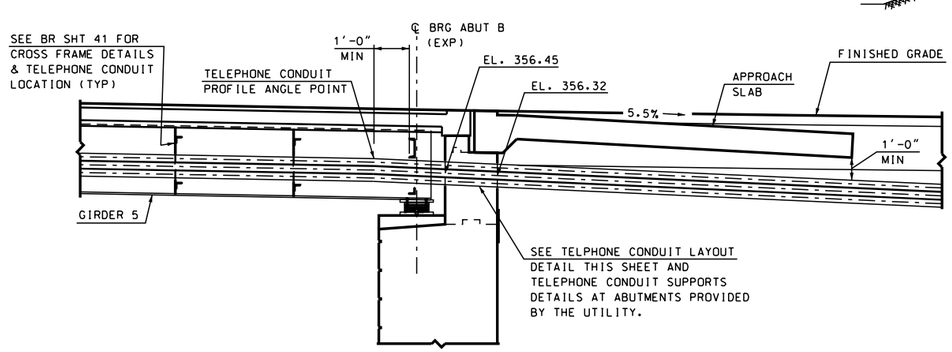

SECTION C-C

SCALE: 1/4" = 1'-0"

NOTE:
FOR LOCATIONS OF SECTIONS A-A, B-B,
& C-C SEE BRIDGE SHEET 25.

SUBDIRECTORY	.DGN LOCATOR	SHEET SCALE
BRC\ABUTB	14957AbutB	AS NOTED

STATE OF NEW HAMPSHIRE
DEPARTMENT OF TRANSPORTATION * BUREAU OF BRIDGE DESIGN

TOWN LEBANON, NH - HARTFORD, VT BRIDGE NO. 058\128 STATE PROJECT 14957

LOCATION US ROUTE 4 over CONNECTICUT RIVER

ABUTMENT B SECTIONS & UTILITY DETAILS

REVISIONS AFTER PROPOSAL

	BY	DATE		BY	DATE
DESIGNED	JWP	12/11	CHECKED	MGL	2/13
DRAWN	SMG	2/12	CHECKED	MGL	2/13
QUANTITIES	JWP	2/13	CHECKED	PAB	2/13

ISSUE DATE
REV. DATE

FEDERAL PROJECT NO. ----------

BRIDGE SHEET 26 OF 71

FILE NUMBER 110-6-1

SHEET NO. 51

TOTAL SHEETS 157

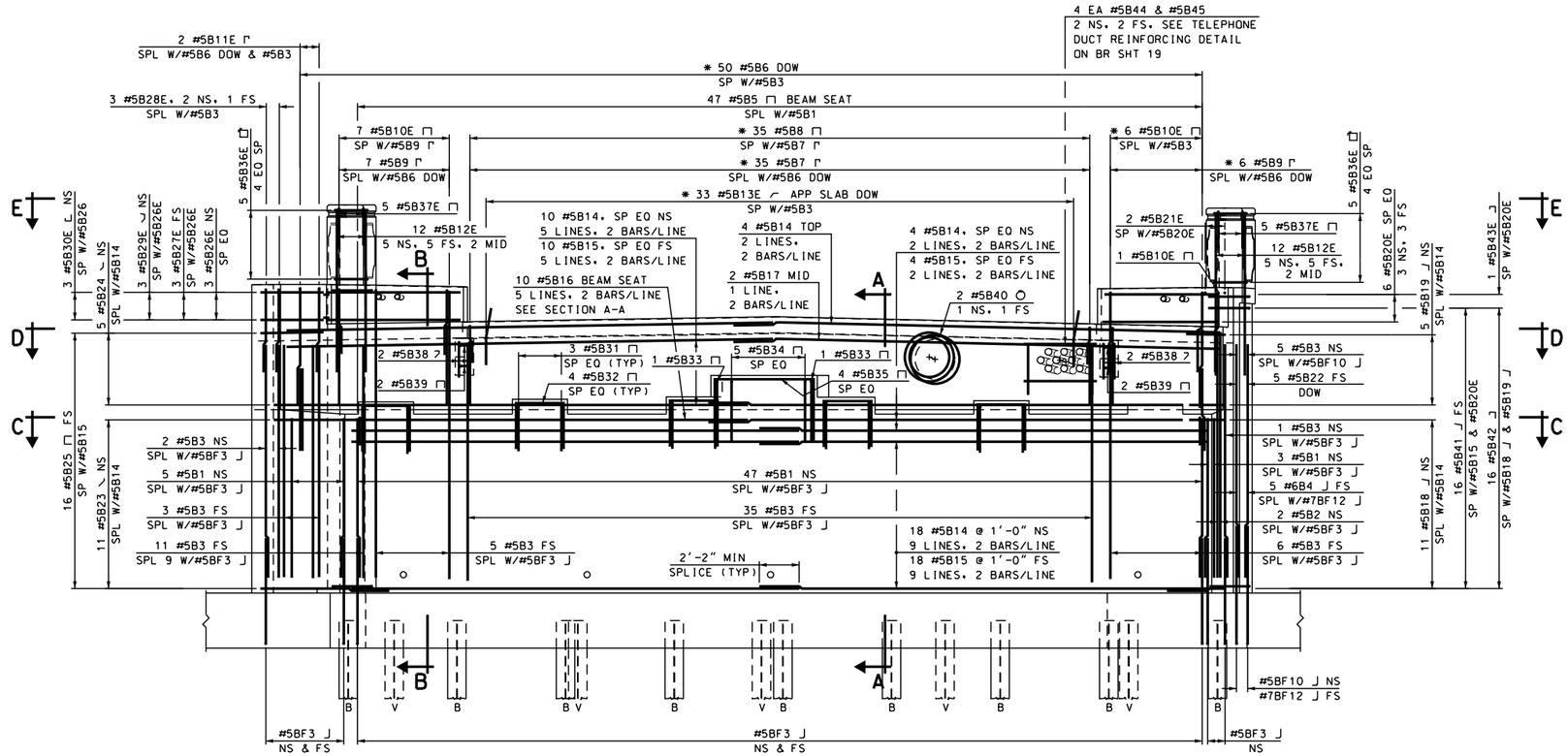

* = CUT TO FIT IN AREAS OF UTILITY BLOCKOUT AND CONDUITS.

ABUTMENT B REINFORCEMENT

SCALE: 1/4" = 1'-0"

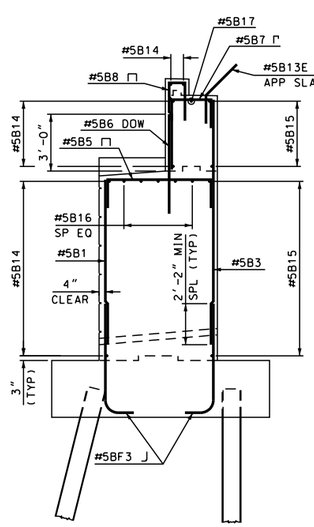

SECTION A-A

SCALE: 1/4" = 1'-0"

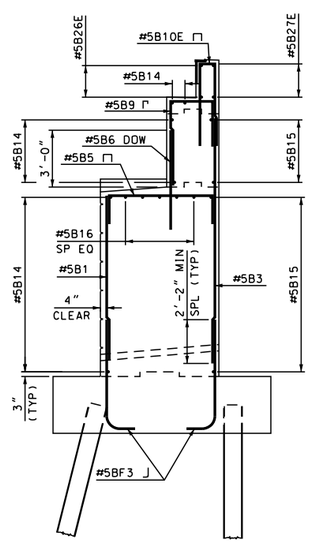

SECTION B-B

SCALE: 1/4" = 1'-0"

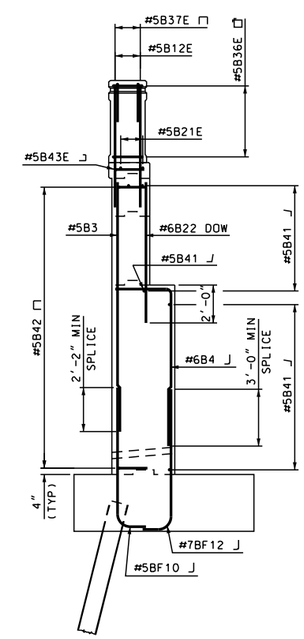

SECTION F-F

SCALE: 1/4" = 1'-0"

NOTE:
FOR SECTIONS C-C, D-D, E-E, AND LOCATION OF SECTION F-F, SEE BRIDGE SHEET 28.

SUBDIRECTORY	.DGN LOCATOR	SHEET SCALE
BRC\ABUTB	14957Brebar	AS NOTED

STATE OF NEW HAMPSHIRE
DEPARTMENT OF TRANSPORTATION * BUREAU OF BRIDGE DESIGN

TOWN LEBANON, NH - HARTFORD, VT BRIDGE NO. 058\128 STATE PROJECT 14957

LOCATION US ROUTE 4 over CONNECTICUT RIVER

ABUTMENT B REINFORCEMENT (1 OF 2)

REVISIONS AFTER PROPOSAL		BY	DATE		BY	DATE
	DESIGNED	JWP	12/11	CHECKED	MGL	2/13
	DRAWN	SMG	2/12	CHECKED	MGL	2/13
	QUANTITIES	JWP	2/13	CHECKED	MGL	2/13

ISSUE DATE	FEDERAL PROJECT NO.	SHEET NO.	TOTAL SHEETS
REV. DATE	----------	52	157

BRIDGE SHEET 27 OF 71

FILE NUMBER 110-6-1

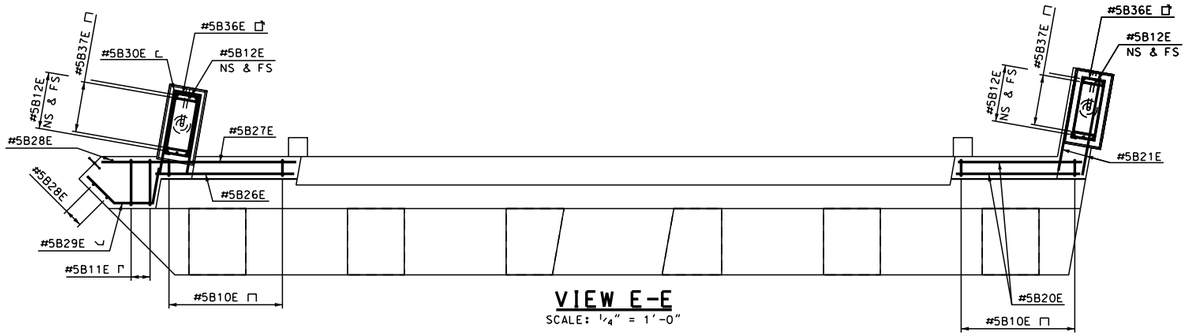

VIEW E-E

SCALE: 1/4" = 1'-0"

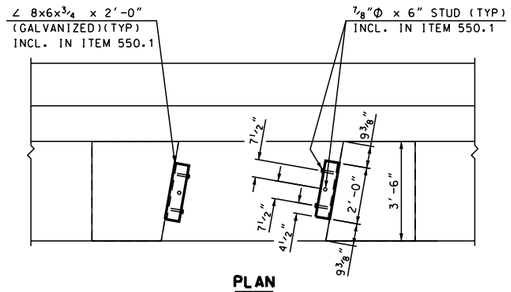

PLAN

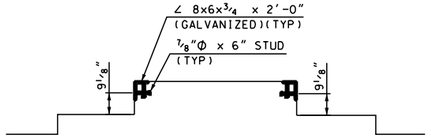

SECTION

KEEPER PLATES

SCALE: 3/8" = 1'-0"

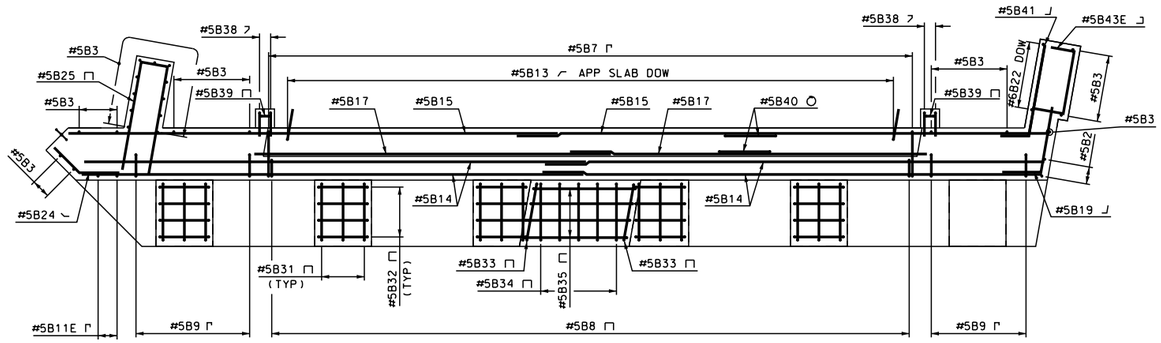

SECTION D-D

SCALE: 1/4" = 1'-0"

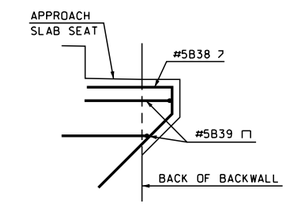

CURB SEAT DETAIL

SCALE: 1/2" = 1'-0"

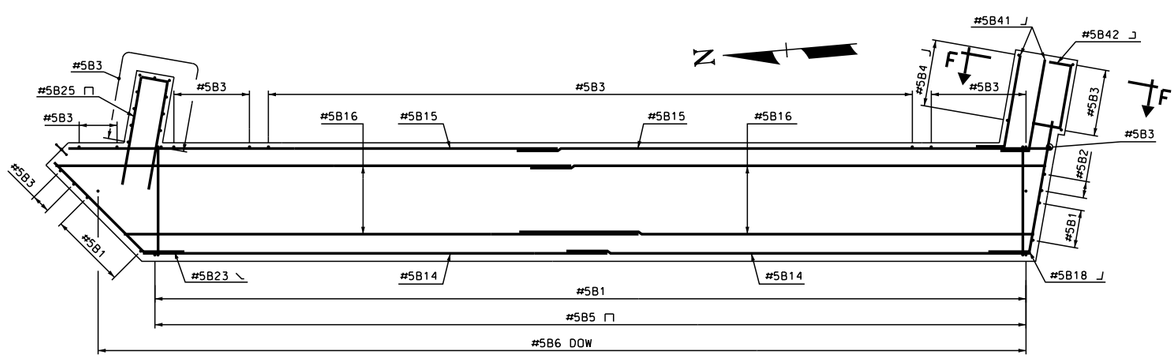

SECTION C-C

(PEDESTAL REINFORCEMENT NOT SHOWN FOR CLARITY)

SCALE: 1/4" = 1'-0"

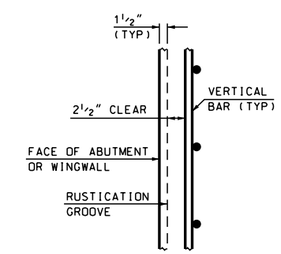

RUSTICATION DETAIL

N.T.S.

NOTE:
FOR LOCATIONS OF SECTIONS C-C, D-D, E-E, AND FOR SECTION F-F, SEE BRIDGE SHEET 27.

STATE OF NEW HAMPSHIRE
DEPARTMENT OF TRANSPORTATION * BUREAU OF BRIDGE DESIGN

TOWN LEBANON, NH - HARTFORD, VT | BRIDGE NO. 058\128 | STATE PROJECT 14957

LOCATION US ROUTE 4 over CONNECTICUT RIVER

ABUTMENT B REINFORCEMENT (2 OF 2)

REVISIONS AFTER PROPOSAL		BY	DATE		BY	DATE
	DESIGNED	JWP	12/11	CHECKED	MGL	2/13
	DRAWN	SMG	2/12	CHECKED	MGL	2/13
	QUANTITIES	JWP	2/13	CHECKED	MGL	2/13

ISSUE DATE	FEDERAL PROJECT NO.	SHEET NO.
REV. DATE	----------	53

BRIDGE SHEET	FILE NUMBER	TOTAL SHEETS
28 OF 71	110-6-1	157

SUBDIRECTORY	.DGN LOCATOR	SHEET SCALE
BRC\ABUTB	14957Brebar	AS NOTED

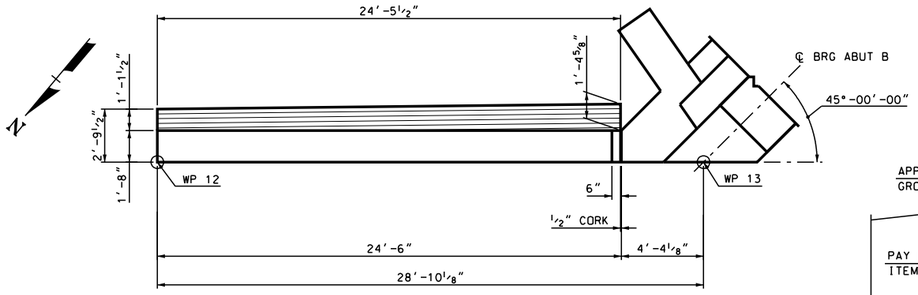

NE WING PLAN

SCALE: 1/4" = 1'-0"

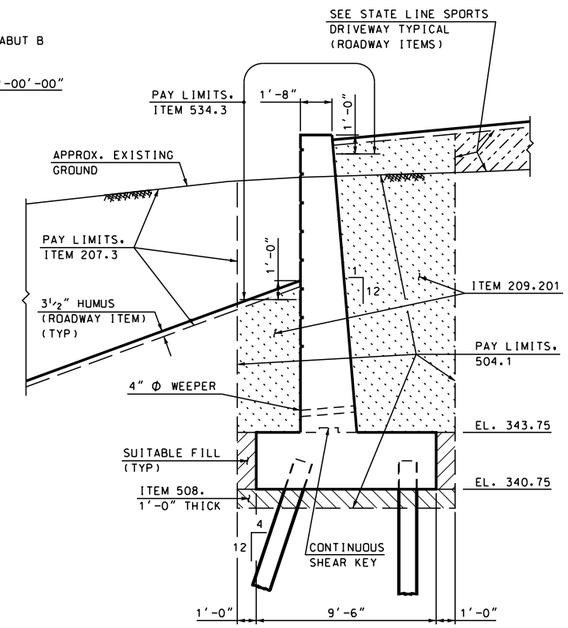

SECTION A-A

SCALE: 1/4" = 1'-0"

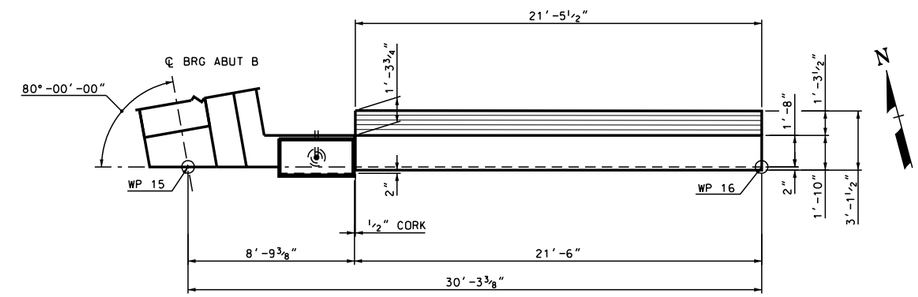

SE WING PLAN

SCALE: 1/4" = 1'-0"

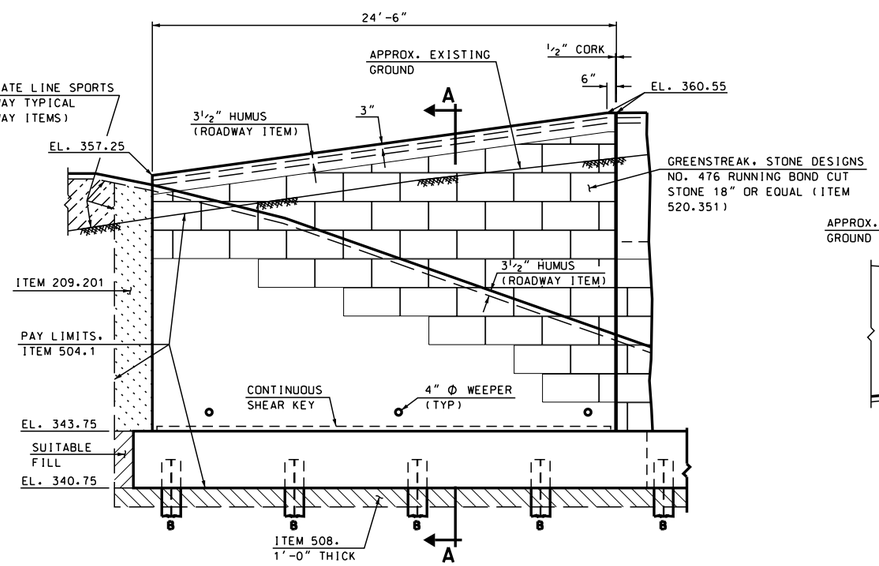

NE WING ELEVATION

SCALE: 1/4" = 1'-0"

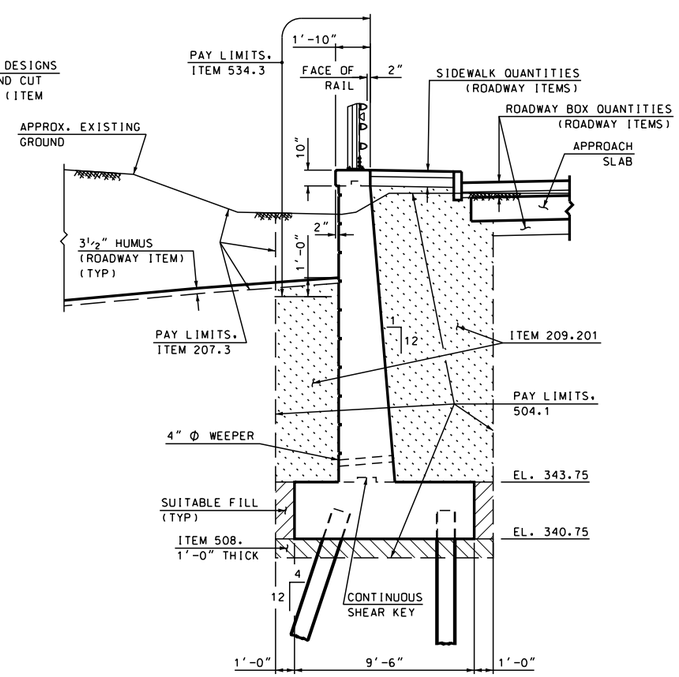

SECTION B-B

SCALE: 1/4" = 1'-0"

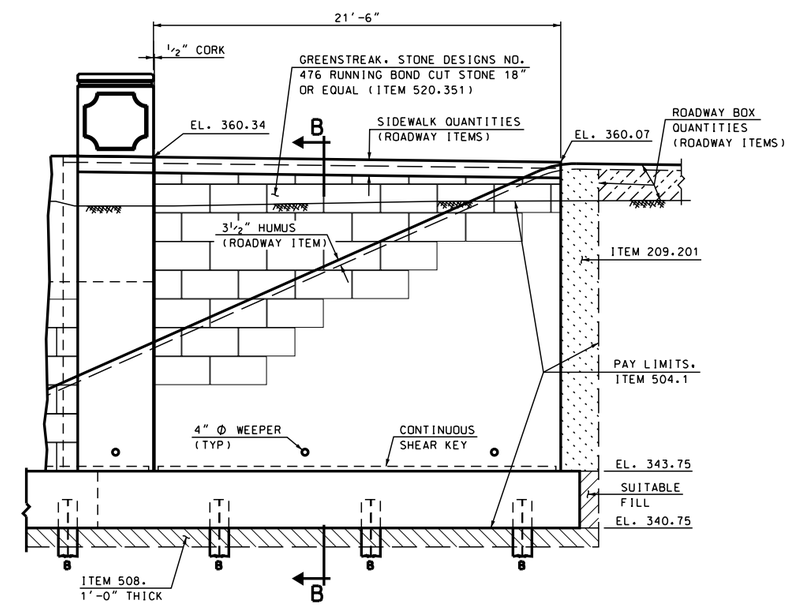

SE WING ELEVATION

SCALE: 1/4" = 1'-0"

STATE OF NEW HAMPSHIRE

DEPARTMENT OF TRANSPORTATION * BUREAU OF BRIDGE DESIGN

TOWN LEBANON, NH - HARTFORD, VT BRIDGE NO. 058\128 STATE PROJECT 14957

LOCATION US ROUTE 4 over CONNECTICUT RIVER

ABUTMENT B WING MASONRY

BRIDGE SHEET 29 OF 71

REVISIONS AFTER PROPOSAL		BY	DATE		BY	DATE
	DESIGNED	JWP	12/11	CHECKED	MGL	2/13
	DRAWN	SMG	2/12	CHECKED	MGL	2/13
	QUANTITIES	JWP	2/13	CHECKED	PAB	2/13

FILE NUMBER 110-6-1

SUBDIRECTORY	.DGN LOCATOR	SHEET SCALE
BRC\ABUTB	14957Bwing	AS NOTED

ISSUE DATE

REV. DATE

FEDERAL PROJECT NO. ----------

SHEET NO. 54

TOTAL SHEETS 157

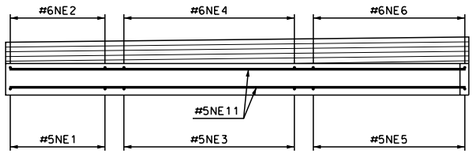

NE WING REINFORCEMENT PLAN

SCALE: 1/4" = 1'-0"

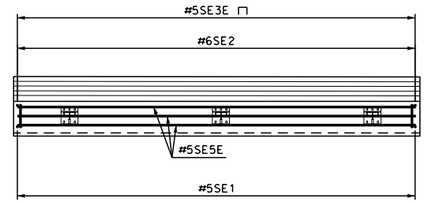

SE WING REINFORCEMENT PLAN

SCALE: 1/4" = 1'-0"

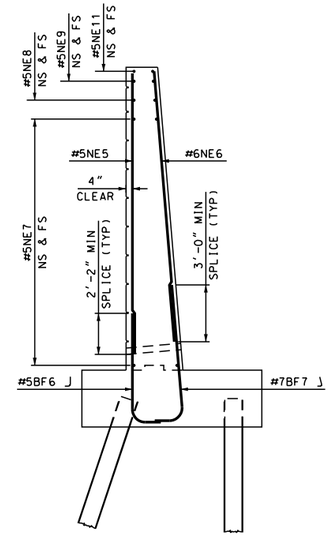

SECTION C-C

SCALE: 1/4" = 1'-0"

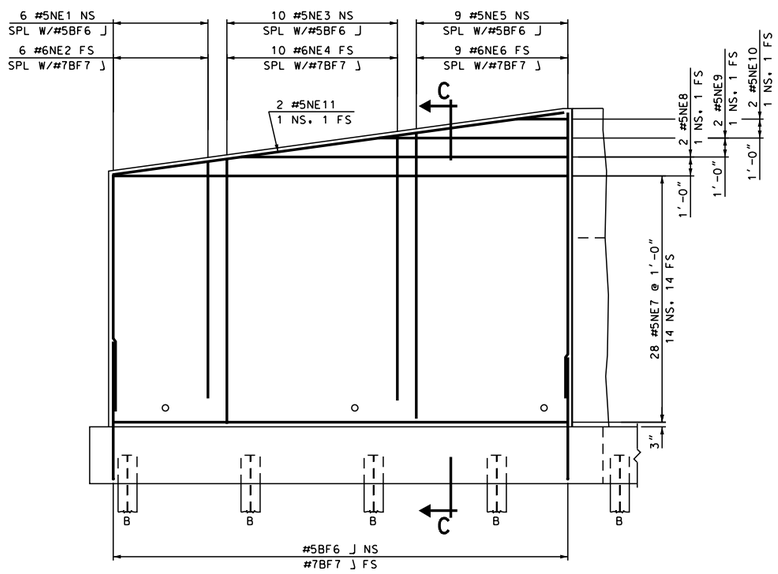

NE WING REINFORCEMENT

SCALE: 1/4" = 1'-0"

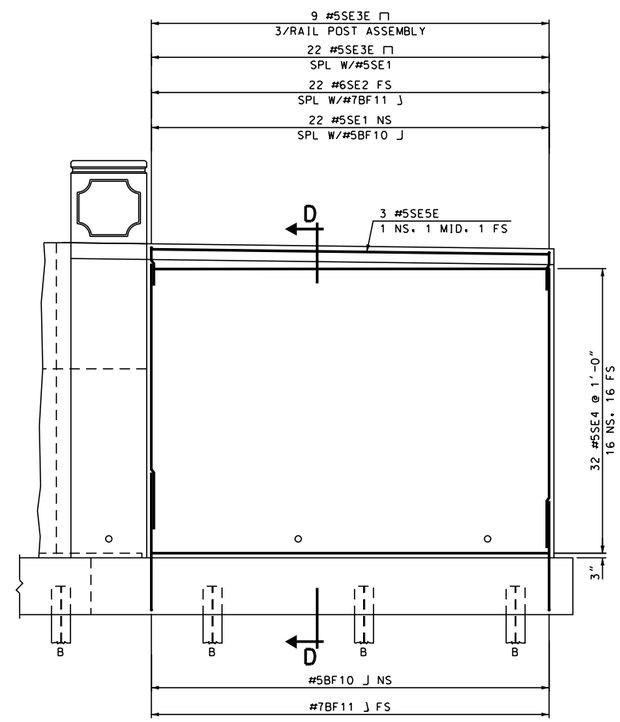

SE WING REINFORCEMENT

SCALE: 1/4" = 1'-0"

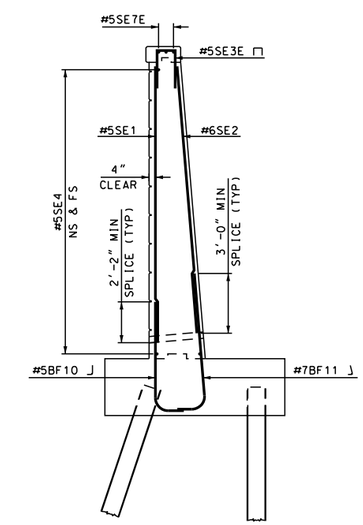

SECTION D-D

SCALE: 1/4" = 1'-0"

STATE OF NEW HAMPSHIRE
DEPARTMENT OF TRANSPORTATION * BUREAU OF BRIDGE DESIGN

TOWN LEBANON, NH - HARTFORD, VT BRIDGE NO. 058\128 STATE PROJECT 14957

LOCATION US ROUTE 4 over CONNECTICUT RIVER

ABUTMENT B WING REINFORCEMENT

BRIDGE SHEET 30 OF 71

REVISIONS AFTER PROPOSAL		BY	DATE		BY	DATE
	DESIGNED	JWP	12/11	CHECKED	MGL	2/13
	DRAWN	SMG	2/12	CHECKED	MGL	2/13
	QUANTITIES	JWP	2/13	CHECKED	MGL	2/13

FILE NUMBER 110-6-1

SUBDIRECTORY	.DGN LOCATOR	SHEET SCALE
BRC\ABUTB	14957Bwing	AS NOTED

ISSUE DATE	FEDERAL PROJECT NO.	SHEET NO.	TOTAL SHEETS
REV. DATE	----------	55	157

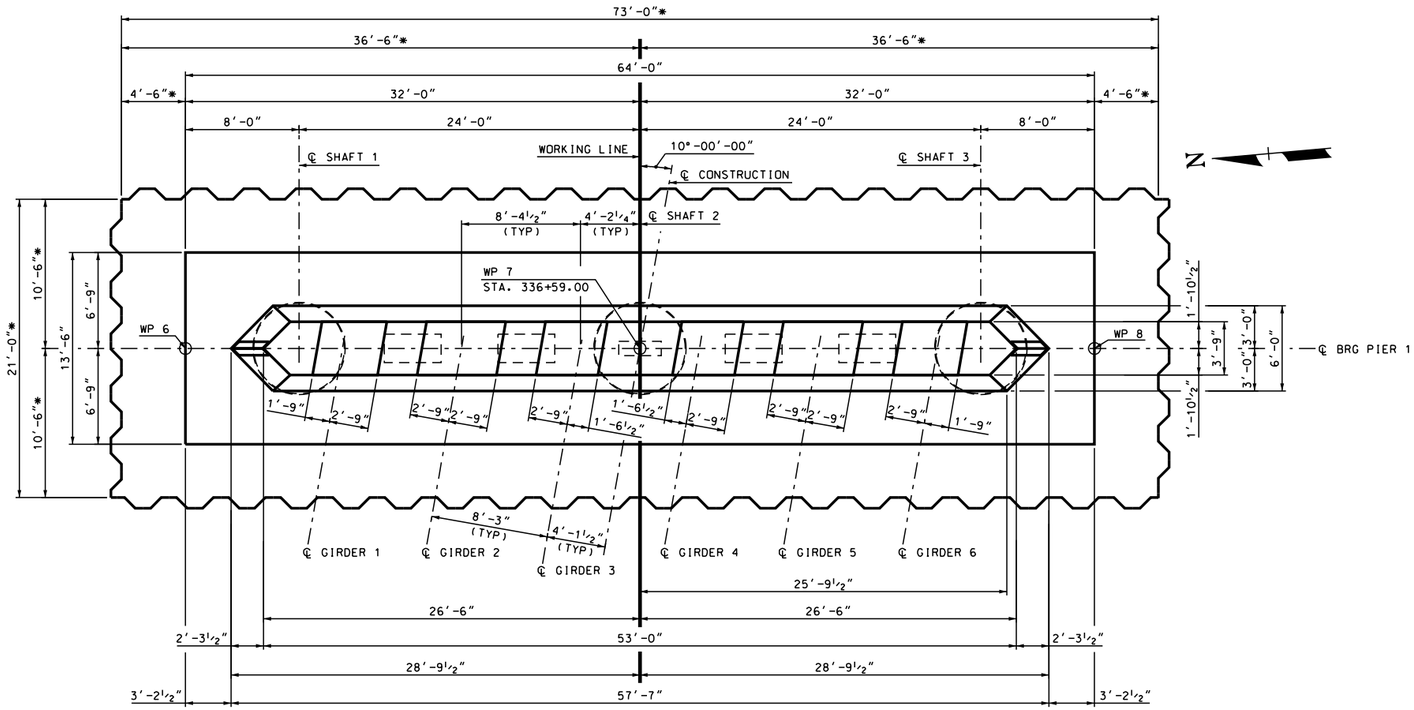

PIER 1 PLAN

SCALE: 3/16" = 1'-0"

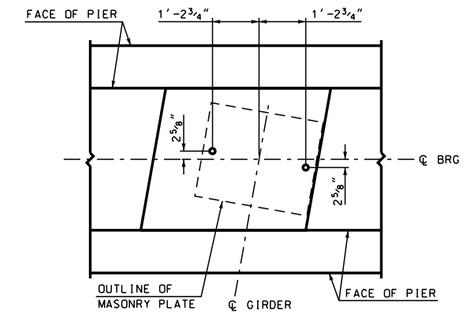

ANCHOR BOLT LAYOUT
PIER 1 (EXP)

SCALE: ½" = 1'-0"

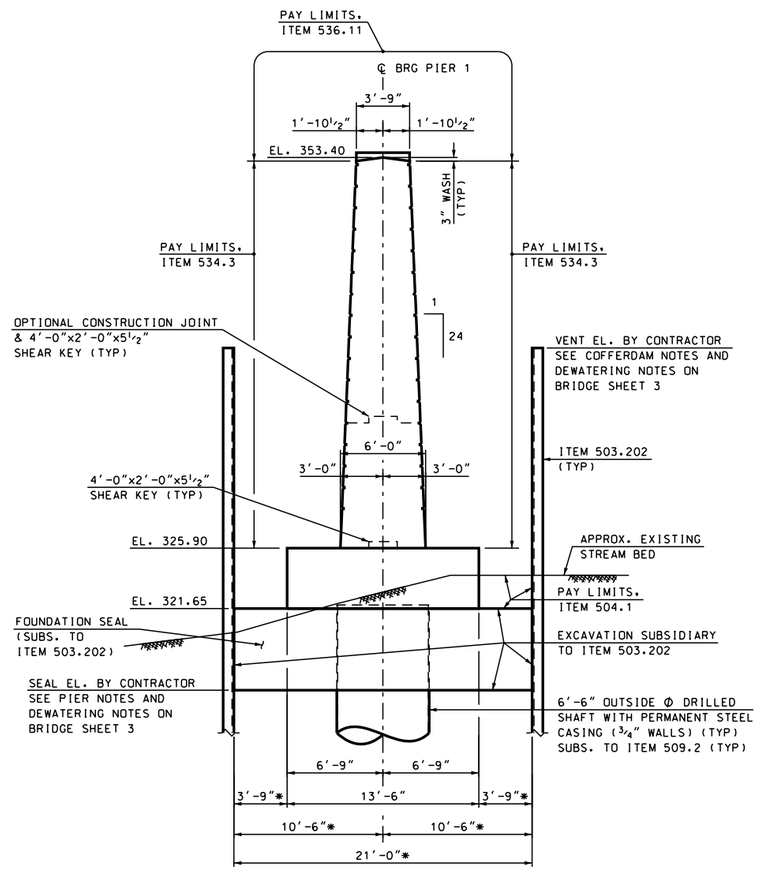

SECTION A-A

SCALE: 3/16" = 1'-0"

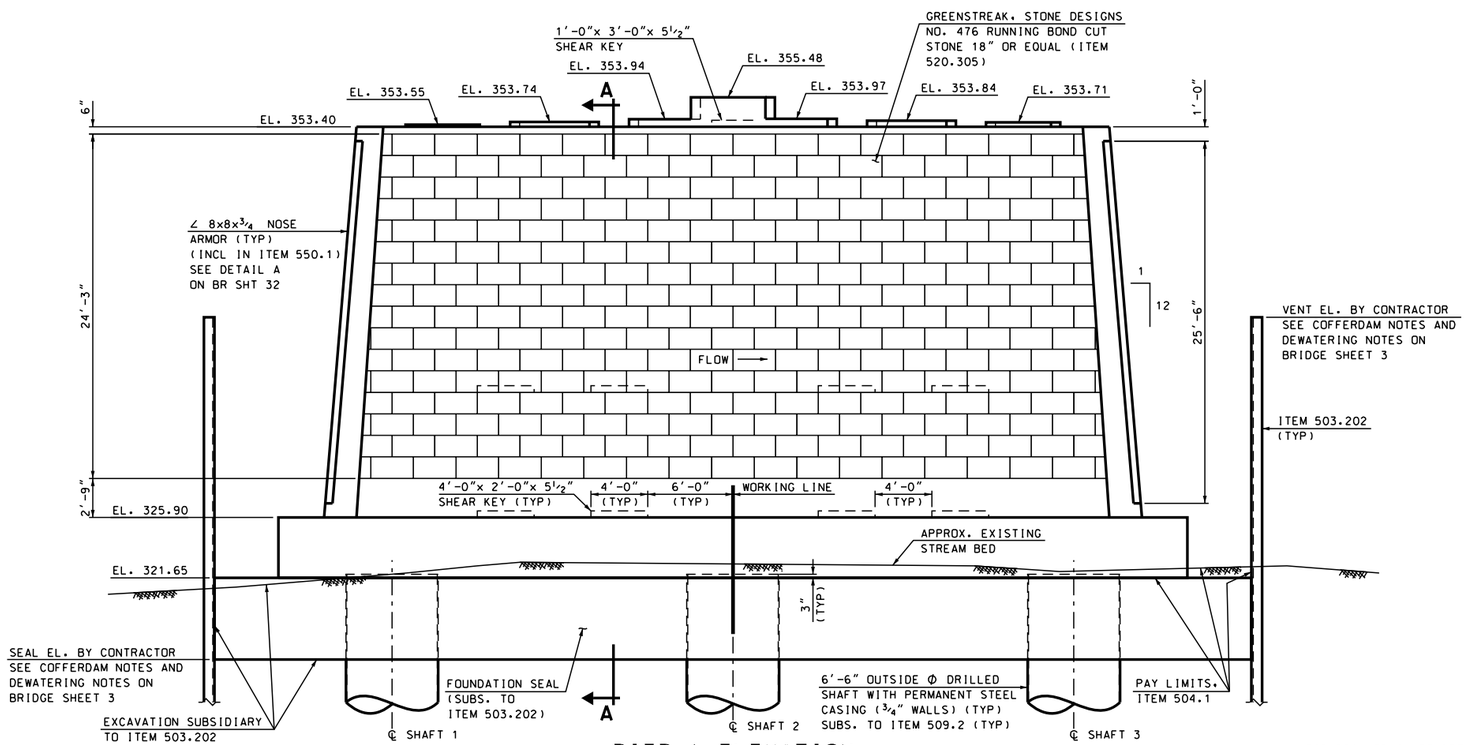

PIER 1 ELEVATION

SCALE: 3/16" = 1'-0"

FOR DRILLED SHAFT DETAILS, SEE BRIDGE SHEET 36.

* SEE COFFERDAM NOTE 4, BRIDGE SHEET 3.

SUBDIRECTORY	.DGN LOCATOR	SHEET SCALE
BRC\PIER	14957Pier1	AS NOTED

STATE OF NEW HAMPSHIRE
DEPARTMENT OF TRANSPORTATION * BUREAU OF BRIDGE DESIGN

TOWN LEBANON, NH - HARTFORD, VT BRIDGE NO. 058\128 STATE PROJECT 14957

LOCATION US ROUTE 4 over CONNECTICUT RIVER

PIER 1 MASONRY

REVISIONS AFTER PROPOSAL

	BY	DATE		BY	DATE
DESIGNED	JWP	12/11	CHECKED	MGL	2/13
DRAWN	SMG	1/12	CHECKED	MGL	2/13
QUANTITIES	JWP	2/13	CHECKED	PAB	2/13

ISSUE DATE
REV. DATE

FEDERAL PROJECT NO. ----------

SHEET NO. 56

BRIDGE SHEET 31 OF 71

FILE NUMBER 110-6-1

TOTAL SHEETS 157

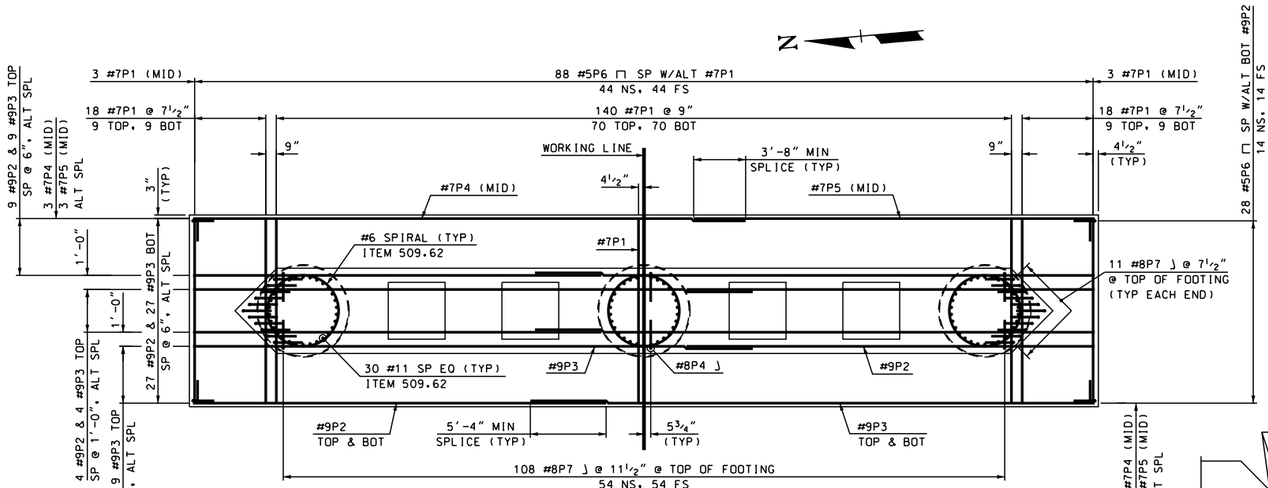

PIER 1 FOOTING REINFORCEMENT

SCALE: 3/16" = 1'-0"

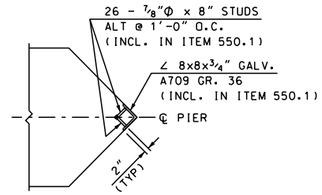

DETAIL A

SCALE: 3/8" = 1'-0"

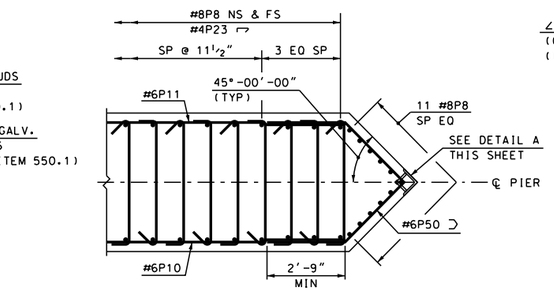

SECTION B-B

SCALE: 3/8" = 1'-0"

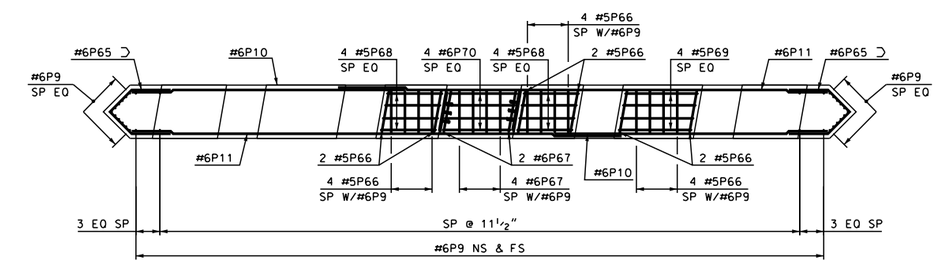

VIEW C-C

SCALE: 3/16" = 1'-0"

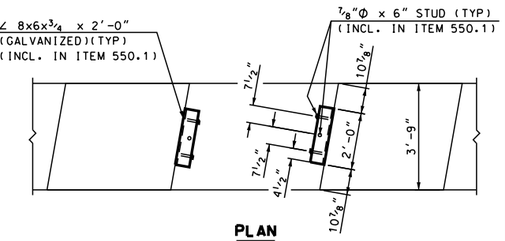

PLAN

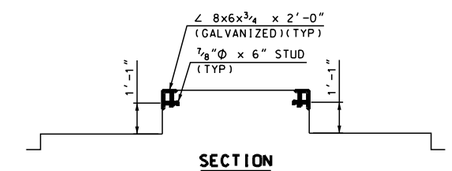

SECTION

KEEPER PLATES

SCALE: 3/8" = 1'-0"

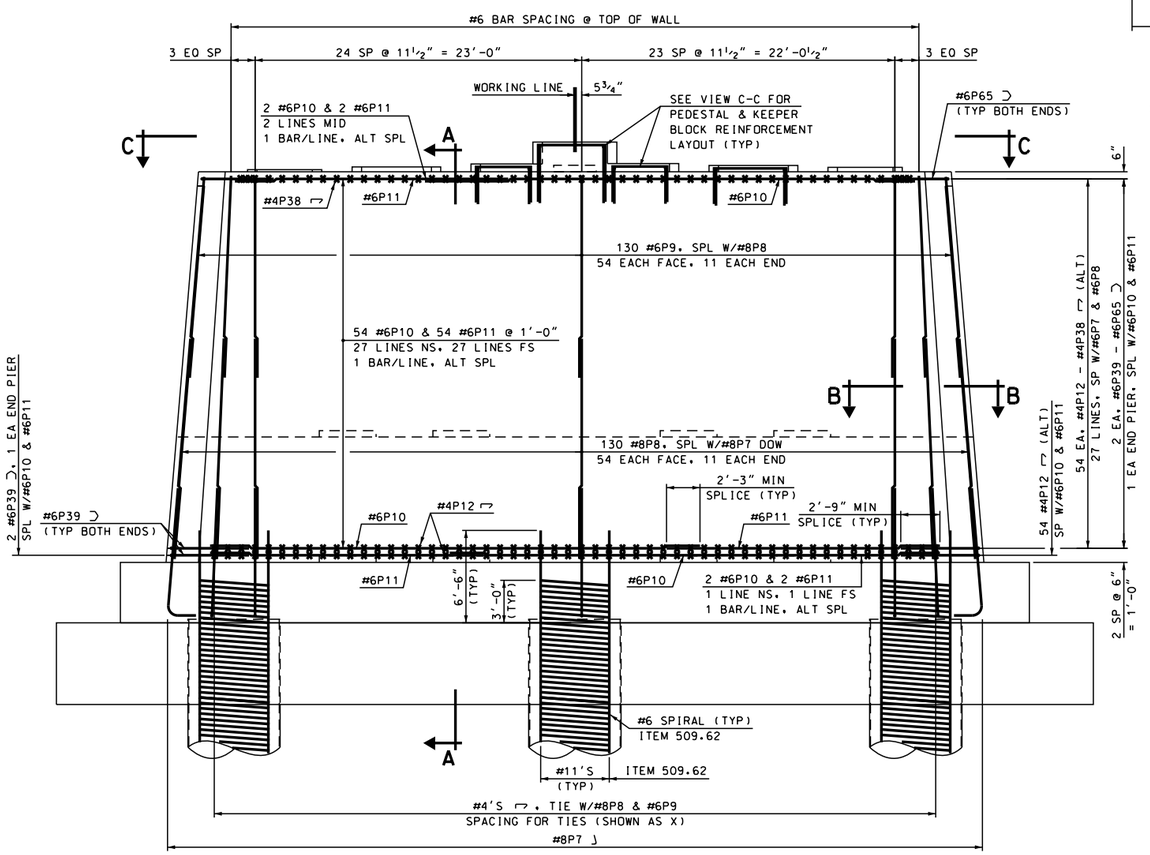

PIER 1 WALL REINFORCEMENT

SCALE: 3/16" = 1'-0"

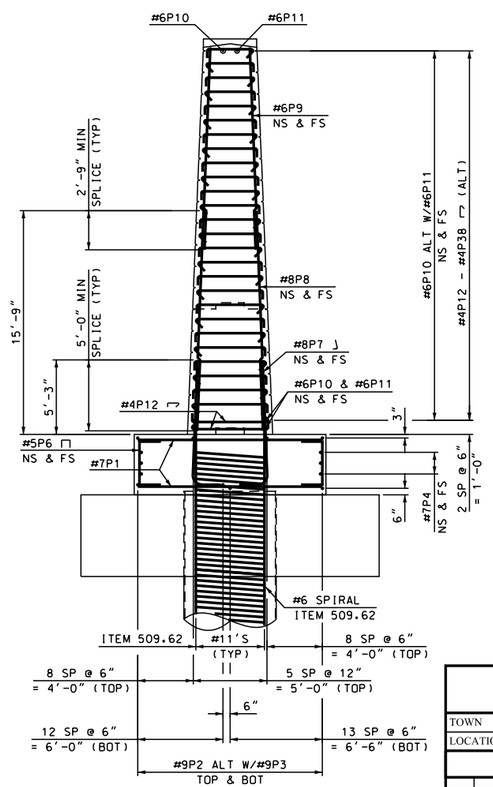

SECTION A-A

SCALE: 3/16" = 1'-0"

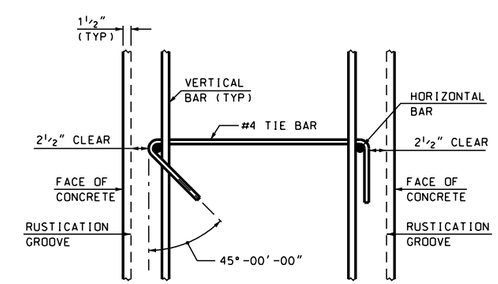

TYPICAL TIE BAR DETAIL

N.T.S.

FOR DRILLED SHAFT DETAILS. SEE BRIDGE SHEET 36.

STATE OF NEW HAMPSHIRE
DEPARTMENT OF TRANSPORTATION * BUREAU OF BRIDGE DESIGN

TOWN LEBANON, NH - HARTFORD, VT | BRIDGE NO. 058\128 | STATE PROJECT 14957

LOCATION US ROUTE 4 over CONNECTICUT RIVER

PIER 1 REINFORCEMENT

REVISIONS AFTER PROPOSAL		BY	DATE		BY	DATE
	DESIGNED	JWP	12/11	CHECKED	MGL	2/13
	DRAWN	SMG	1/12	CHECKED	MGL	2/13
	QUANTITIES	JWP	2/13	CHECKED	MGL	2/13

ISSUE DATE	FEDERAL PROJECT NO.	SHEET NO.	TOTAL SHEETS
REV. DATE	----------	57	157

BRIDGE SHEET 32 OF 71

FILE NUMBER 110-6-1

SUBDIRECTORY	.DGN LOCATOR	SHEET SCALE
BRC\PIER	14957Pier1Rein	AS NOTED

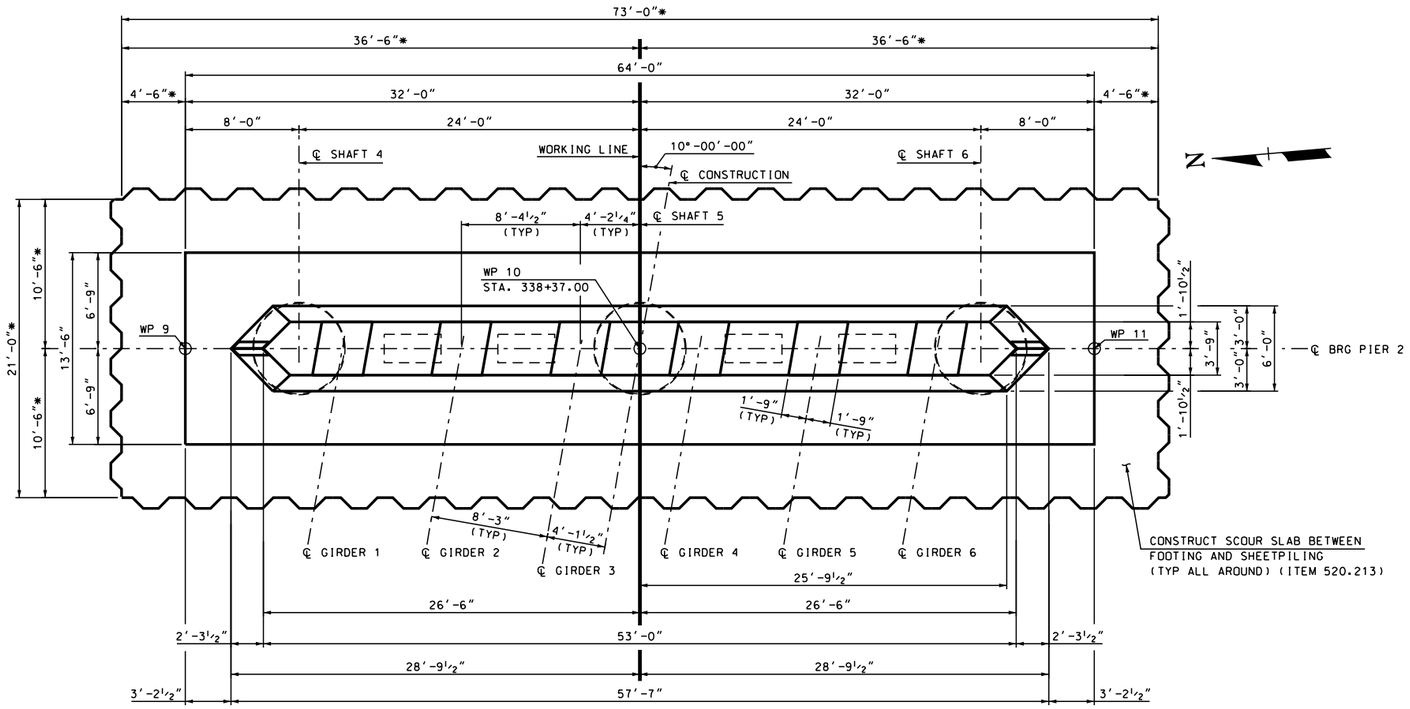

PIER 2 PLAN

SCALE: 3/16" = 1'-0"

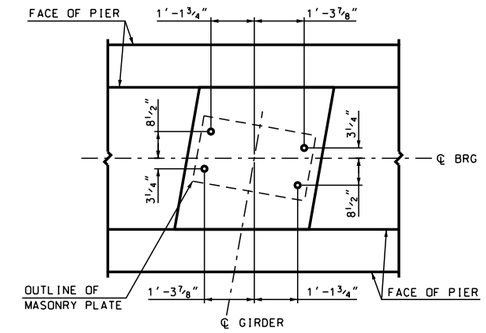

ANCHOR BOLT LAYOUT PIER 2 (FIXED)

SCALE: ½" = 1'-0"

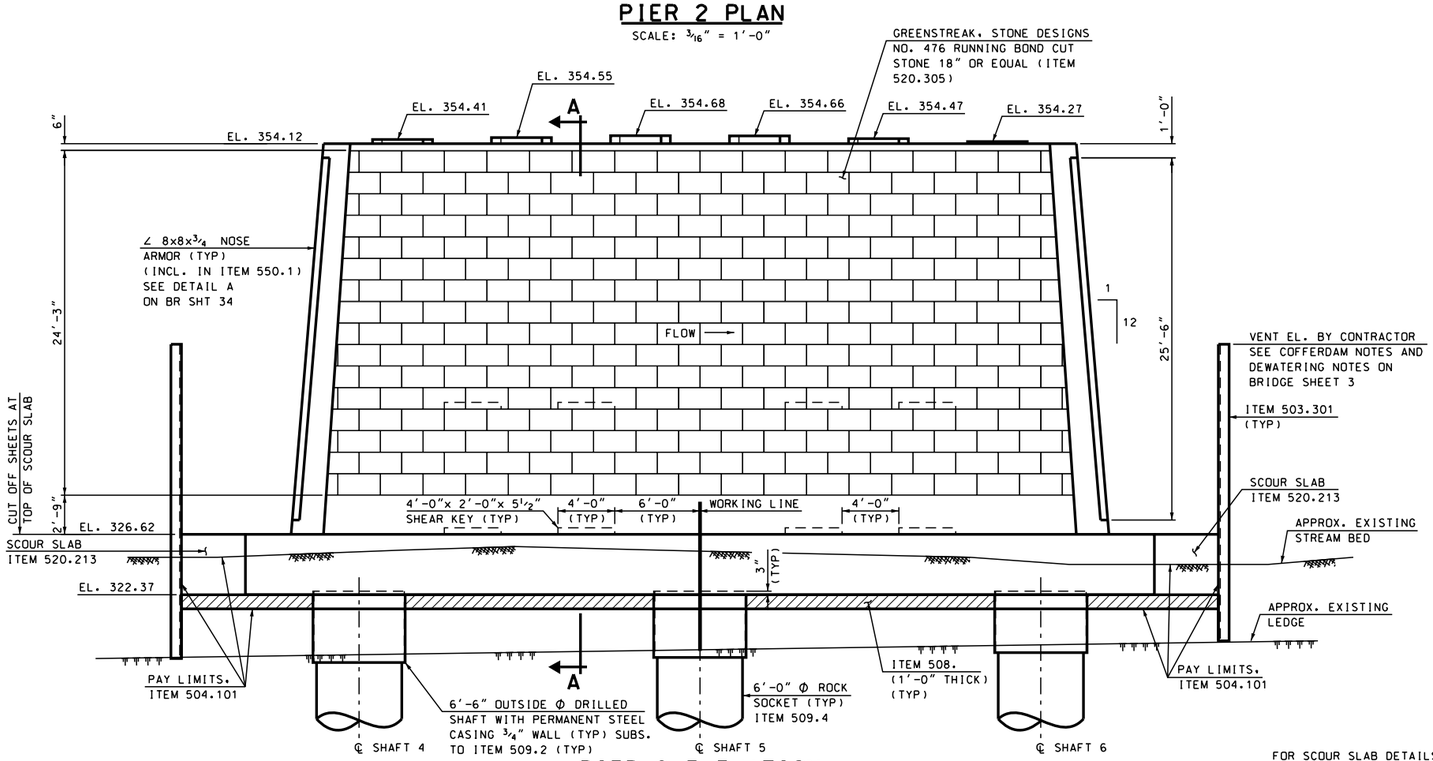

PIER 2 ELEVATION

SCALE: 3/16" = 1'-0"

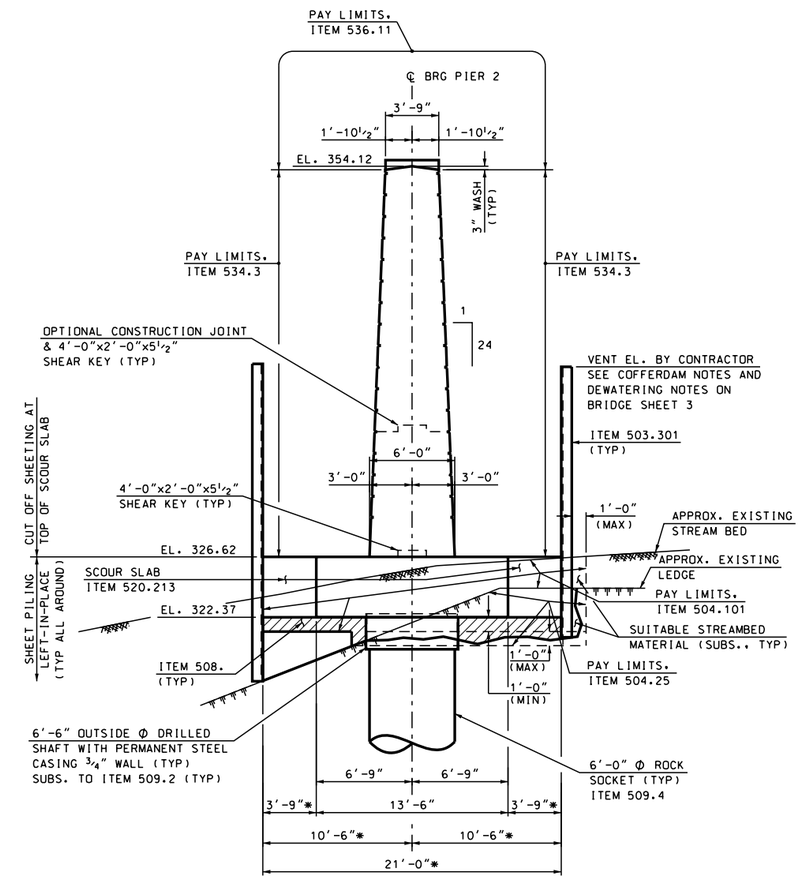

SECTION A-A

SCALE: 3/16" = 1'-0"

FOR SCOUR SLAB DETAILS, SEE BRIDGE SHEET 35.

FOR DRILLED SHAFT DETAILS, SEE BRIDGE SHEET 36.

* SEE COFFERDAM NOTE 4, BRIDGE SHEET 3.

SUBDIRECTORY	.DGN LOCATOR	SHEET SCALE
BRC\PIER	14957Pier2	AS NOTED

STATE OF NEW HAMPSHIRE

DEPARTMENT OF TRANSPORTATION * BUREAU OF BRIDGE DESIGN

TOWN LEBANON, NH - HARTFORD, VT BRIDGE NO. 058\128 STATE PROJECT 14957

LOCATION US ROUTE 4 over CONNECTICUT RIVER

PIER 2 MASONRY

REVISIONS AFTER PROPOSAL		BY	DATE		BY	DATE
	DESIGNED	JWP	12/11	CHECKED	MGL	2/13
	DRAWN	SMG	1/12	CHECKED	MGL	2/13
	QUANTITIES	JWP	2/13	CHECKED	PAB	2/13
	ISSUE DATE		FEDERAL PROJECT NO.		SHEET NO.	
	REV. DATE		----------		58	

BRIDGE SHEET 33 OF 71

FILE NUMBER 110-6-1

TOTAL SHEETS 157

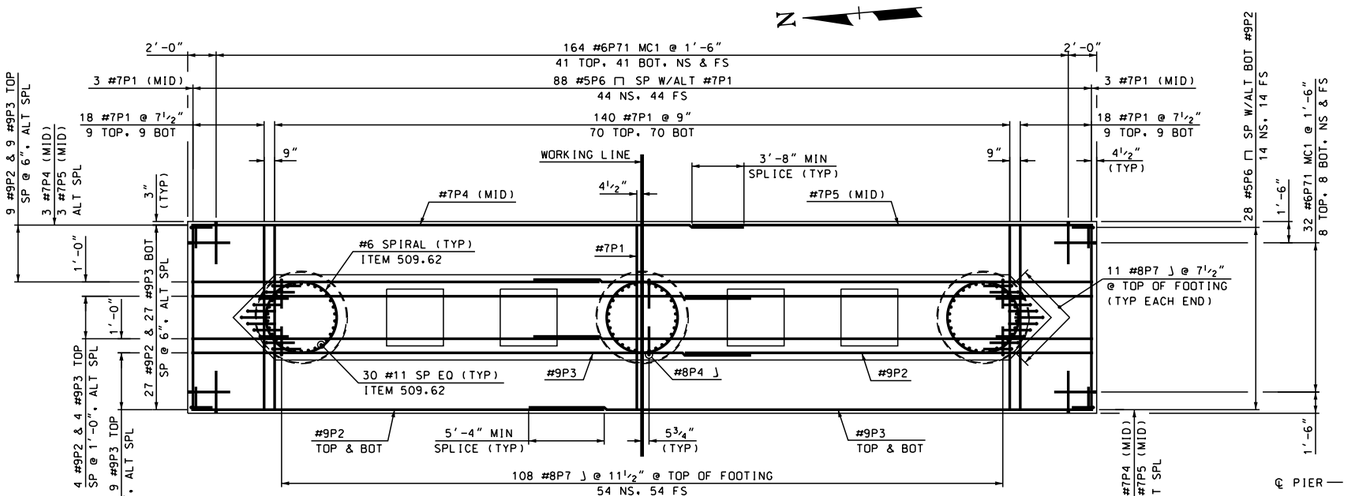

PIER 2 FOOTING REINFORCEMENT

SCALE: 3/16" = 1'-0"

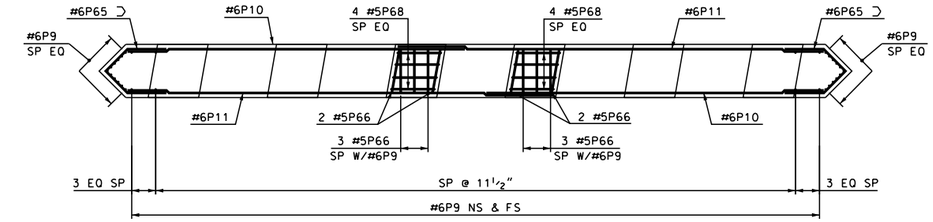

VIEW C-C

SCALE: 3/16" = 1'-0"

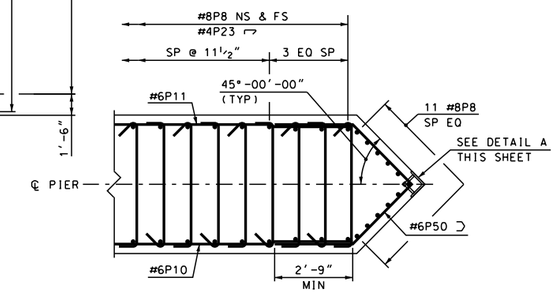

SECTION B-B

SCALE: 3/8" = 1'-0"

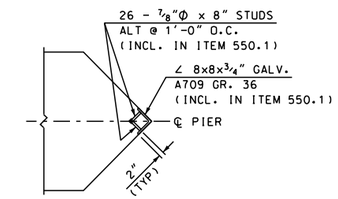

DETAIL A

SCALE: 3/8" = 1'-0"

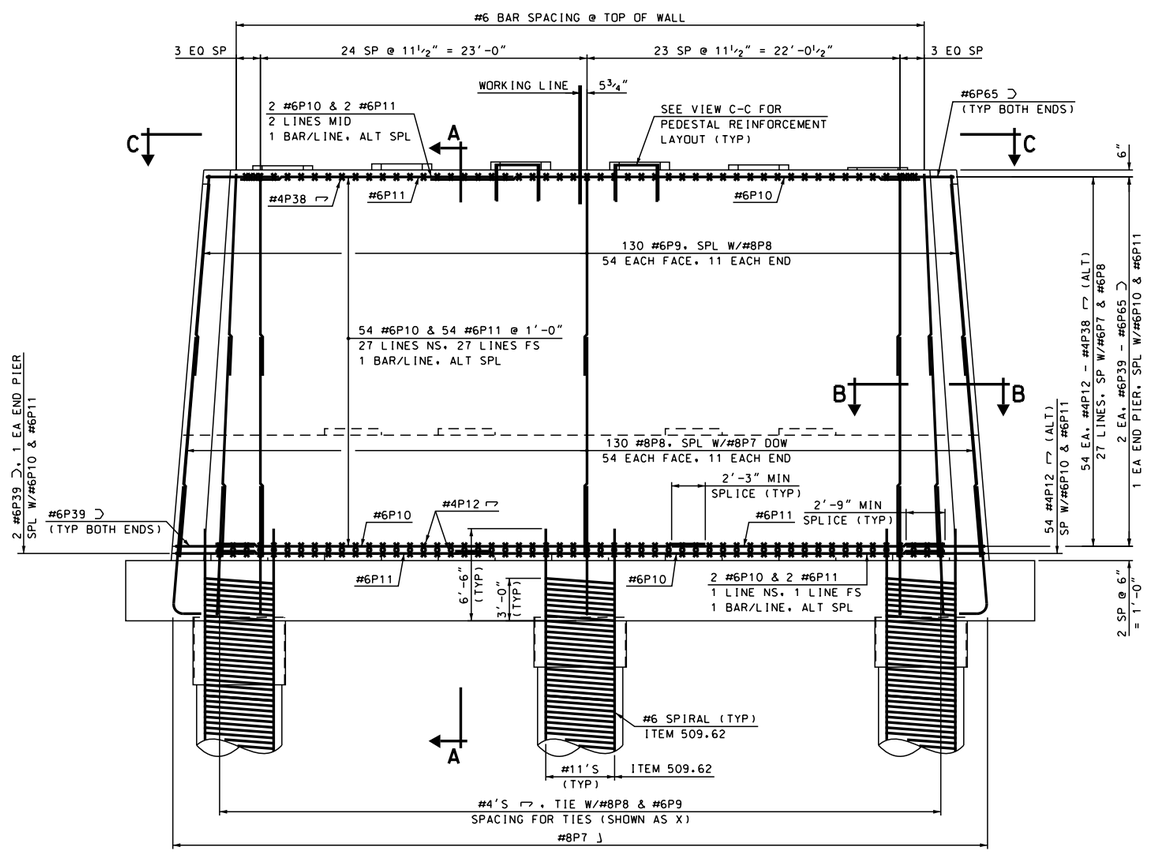

PIER 2 WALL REINFORCEMENT

SCALE: 3/16" = 1'-0"

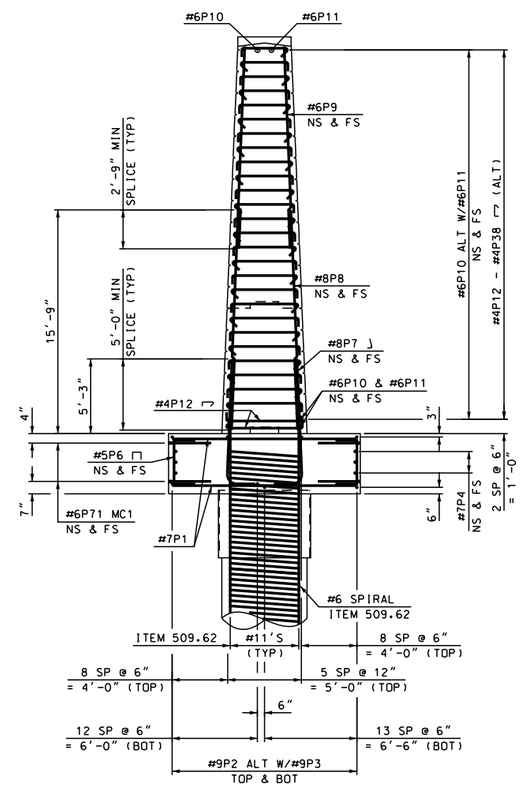

SECTION A-A

SCALE: 3/16" = 1'-0"

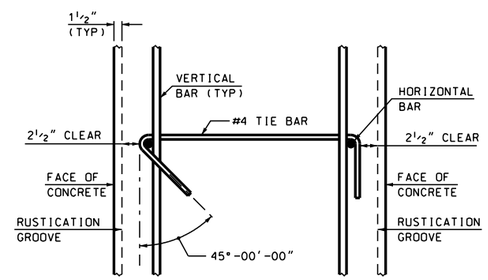

TYPICAL TIE BAR DETAIL

N.T.S.

FOR SCOUR SLAB DETAILS, SEE BRIDGE SHEET 35.
FOR DRILLED SHAFT DETAILS, SEE BRIDGE SHEET 36.

STATE OF NEW HAMPSHIRE
DEPARTMENT OF TRANSPORTATION * BUREAU OF BRIDGE DESIGN

TOWN LEBANON, NH - HARTFORD, VT | BRIDGE NO. 058\128 | STATE PROJECT 14957
LOCATION US ROUTE 4 over CONNECTICUT RIVER

PIER 2 REINFORCEMENT

REVISIONS AFTER PROPOSAL		BY	DATE		BY	DATE
	DESIGNED	JWP	12/11	CHECKED	MGL	2/13
	DRAWN	SMG	1/12	CHECKED	MGL	2/13
	QUANTITIES	JWP	2/13	CHECKED	MGL	2/13

SUBDIRECTORY	.DGN LOCATOR	SHEET SCALE
BRC\PIER	14957Pier2Rein	AS NOTED

ISSUE DATE		FEDERAL PROJECT NO.	SHEET NO.
REV. DATE		----------	59

BRIDGE SHEET 34 OF 71
FILE NUMBER 110-6-1
TOTAL SHEETS 157

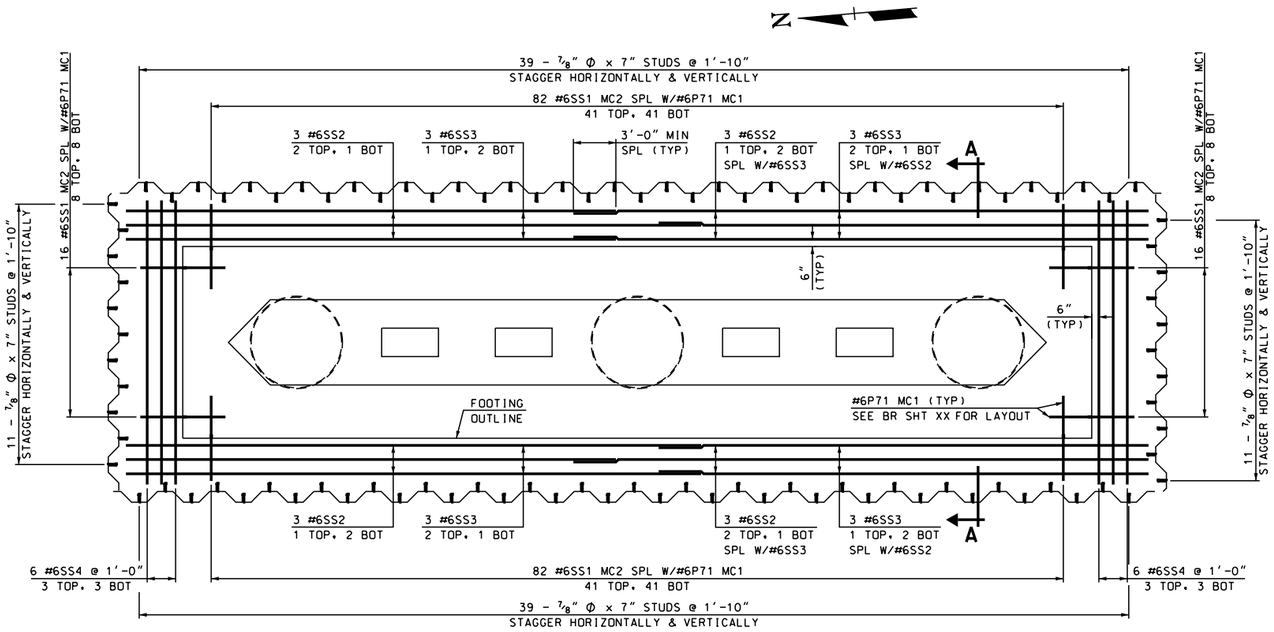

PIER 2 SCOUR SLAB REINFORCEMENT

SCALE: 3/16" = 1'-0"

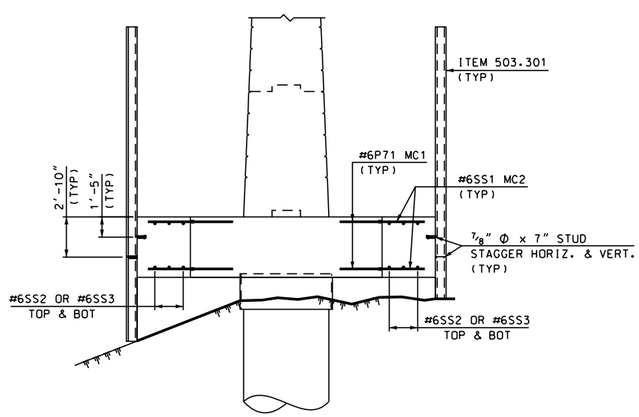

SECTION A-A

SCALE: 3/16" = 1'-0"

SCOUR SLAB NOTES

1. THE SCOUR SLAB CONCRETE SHALL BE PLACED IN THE DRY. THE CONTRACTOR'S DEWATERING AND VENTING SYSTEM AND CONSTRUCTION SEQUENCE FOR THE SCOUR SLAB SYSTEM SHALL REMAIN IN SERVICE UNTIL THE SCOUR SLAB CONCRETE HAS ACHIEVED AN APPROVED SET TIME TO RESIST THE UPLIFT PRESSURE THROUGH THE DOWNARD REACTION OF THE SCOUR SLAB. PIER FOOTING AND DRILLED SHAFTS. ALL WORK ASSOCIATED WITH DEWATERING AND RELIEVING WATER PRESSURE BELOW THE SCOUR SLAB SHALL BE SUDISIARY TO ITEM 503.301.
2. 7/8" Φ x 7" STUDS SHALL BE SUBSIDIARY TO ITEM 503.301.

SUBDIRECTORY	.DGN LOCATOR	SHEET SCALE
BRC\PIER	14957ScourSlab	AS NOTED

STATE OF NEW HAMPSHIRE
DEPARTMENT OF TRANSPORTATION * BUREAU OF BRIDGE DESIGN

TOWN LEBANON, NH - HARTFORD, VT BRIDGE NO. 058\128 STATE PROJECT 14957

LOCATION US ROUTE 4 over CONNECTICUT RIVER

SCOUR SLAB DETAILS

REVISIONS AFTER PROPOSAL		BY	DATE		BY	DATE
	DESIGNED	JWP	10/12	CHECKED	MGL	2/13
	DRAWN	SMG	10/12	CHECKED	MGL	2/13
	QUANTITIES	JWP	2/13	CHECKED	PAB/MGL	2/13
	ISSUE DATE		FEDERAL PROJECT NO.		SHEET NO.	
	REV. DATE		----------		60	

BRIDGE SHEET 35 OF 71

FILE NUMBER 110-6-1

TOTAL SHEETS 157

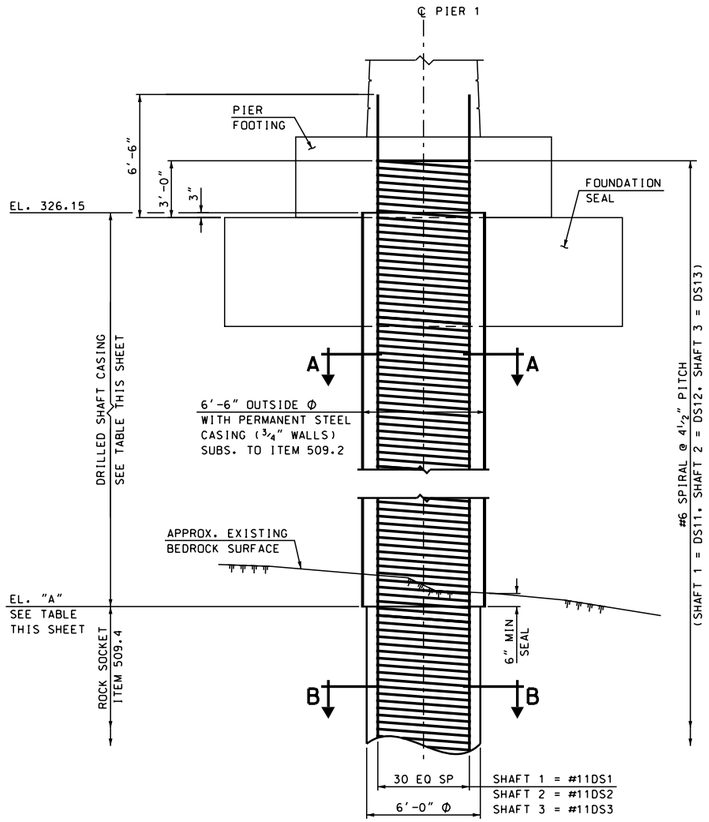

PIER 1 DRILLED SHAFT

SCALE: 1/4" = 1'-0"

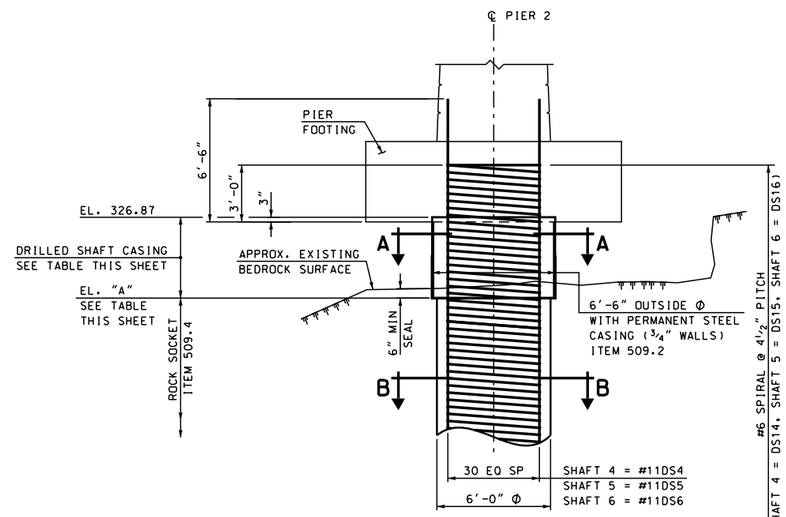

PIER 2 DRILLED SHAFT

SCALE: 1/4" = 1'-0"

ITEM 509.62- DRILLED SHAFT REINFORCING STEEL

MARK	SIZE	LENGTH (FT)	NUMBER	TYPE	LBS/FT	LBS
DS1	#11	68	30	STR	5.313	10839
DS2	#11	65	30	STR	5.313	10360
DS3	#11	62	30	STR	5.313	9882
DS4	#11	37	30	STR	5.313	5897
DS5	#11	37	30	STR	5.313	5897
DS6	#11	37	30	STR	5.313	5897
DS11	#6	68	1	SPIRAL	64.45	4383
DS12	#6	65	1	SPIRAL	64.45	4189
DS13	#6	62	1	SPIRAL	64.45	3996
DS14	#6	37	1	SPIRAL	64.45	2385
DS15	#6	37	1	SPIRAL	64.45	2385
DS16	#6	37	1	SPIRAL	64.45	2385
ESTIMATED WEIGHT (FOR BIDDING PURPOSES ONLY)						68495

TABLE FOR ESTIMATED TOP OF ROCK SOCKET ELEVATION, MINIMUM ROCK SOCKET LENGTH AND ORDERED LENGTH FOR ITEM 509.62

PIER #	DRILLED SHAFT NO.	ESTIMATED EL. "A" (FT)	MIN. ROCK SOCKET LENGTH (FT)	ORDERED LENGTH FOR ITEM 509.62
1	1	285	15	68
1	2	288	15	65
1	3	291	15	62
2	4	317	15	37
2	5	317	15	37
2	6	317	15	37

TABLE NOTES:

1. ELEVATION "A" REPRESENTS THE ESTIMATED BOTTOM OF PERMANENT CASING/TOP OF ROCK SOCKET, AFTER THE CASING HAS BEEN SEATED AS FOLLOWS:
   A) A MINIMUM OF 6 INCHES BELOW ANY SURFACE WEATHERED BEDROCK, AS DIRECTED, AND
   B) A MINIMUM OF 6 INCHES BELOW THE LOW POINT OF THE BEDROCK SURFACE THAT IS ENCOUNTERED IN THE DRILLED SHAFT EXCAVATION.
2. THE MINIMUM ROCK SOCKET LENGTH SHALL BE MEASURED FROM ELEVATION "A", AS DEFINED IN TABLE NOTE 1.
3. THIS TABLE IS NOT INTENDED FOR USE IN DETERMINING THE ORDERED AND INSTALLED LENGTH OF THE PERMANENT CASING. THE CONTRACTOR IS RESPONSIBLE FOR DETERMINING THE PERMANENT CASING LENGTH. SEE PIER DRILLED SHAFT NOTES ON BRIDGE SHEET 3 FOR ADDITIONAL INFORMATION.
4. MECHANICAL SPLICES WILL NOT BE ALLOWED FOR ORDERED LENGTHS OF 37' OR LESS IN PIER 1.
5. MECHANICAL SPLICES WILL NOT BE ALLOWED FOR PIER 2.

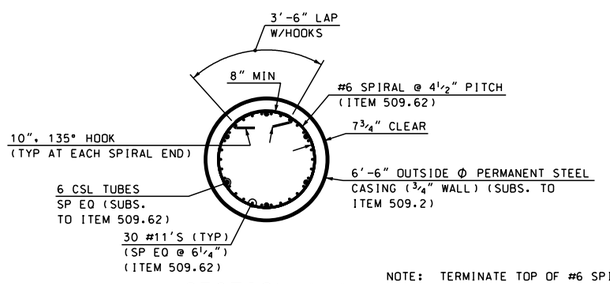

SECTION A-A

SCALE: 1/4" = 1'-0"
TYPICAL DRILLED SHAFT SECTION

NOTE: TERMINATE TOP OF #6 SPIRAL WITH 1 1/2 TURNS AT 0" PITCH AND A 10", 135° HOOK, TYP.

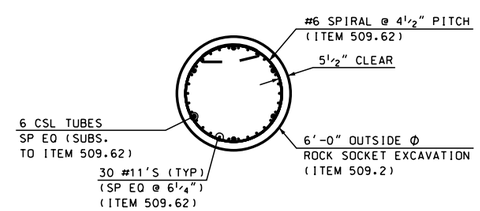

SECTION B-B

SCALE: 1/4" = 1'-0"
TYPICAL ROCK SOCKET SECTION

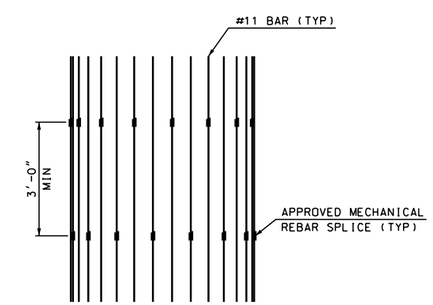

MECHANICAL SPLICE DETAIL

SCALE: 1/2" = 1'-0"

STATE OF NEW HAMPSHIRE
DEPARTMENT OF TRANSPORTATION * BUREAU OF BRIDGE DESIGN

TOWN LEBANON, NH - HARTFORD, VT BRIDGE NO. 058\128 STATE PROJECT 14957
LOCATION US ROUTE 4 over CONNECTICUT RIVER

DRILLED SHAFT DETAILS

REVISIONS AFTER PROPOSAL		BY	DATE		BY	DATE
	DESIGNED	JWP	10/12	CHECKED	MGL	2/13
	DRAWN	JWP	10/12	CHECKED	MGL	2/13
	QUANTITIES	JWP	2/13	CHECKED	MGL	2/13

ISSUE DATE
REV. DATE
FEDERAL PROJECT NO. ----------
SHEET NO. 61

BRIDGE SHEET 36 OF 71
FILE NUMBER 110-6-1
TOTAL SHEETS 157

SUBDIRECTORY	.DGN LOCATOR	SHEET SCALE
BRC\PIER	14957Shaft	AS NOTED

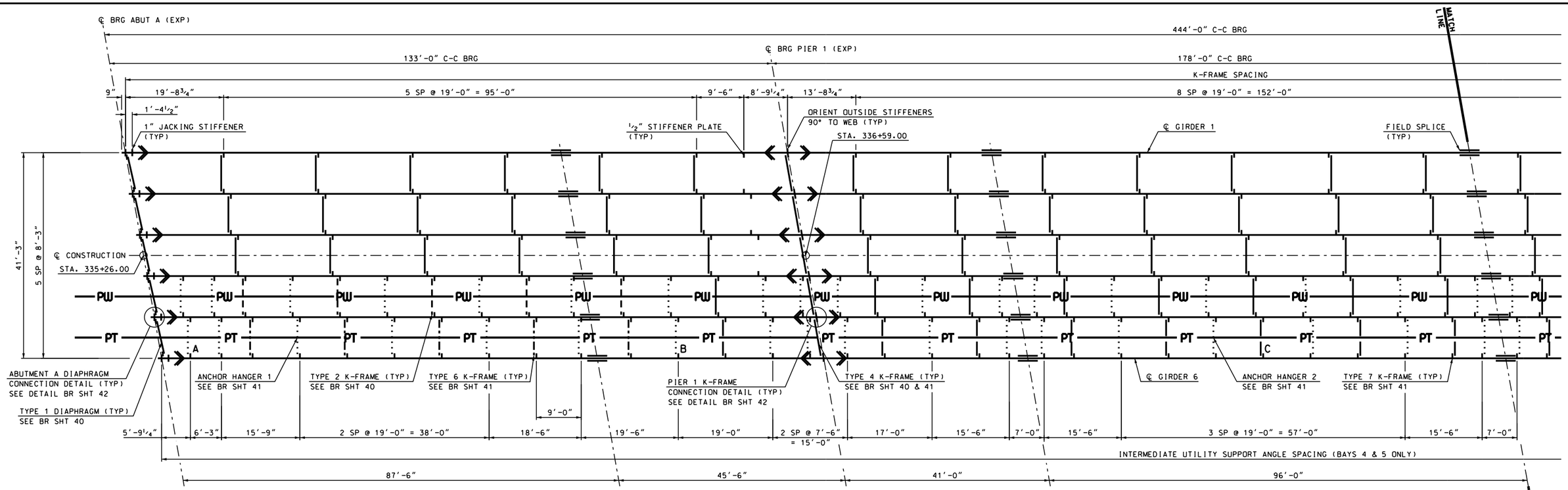

FRAMING PLAN

SCALE: 1" = 10'-0"

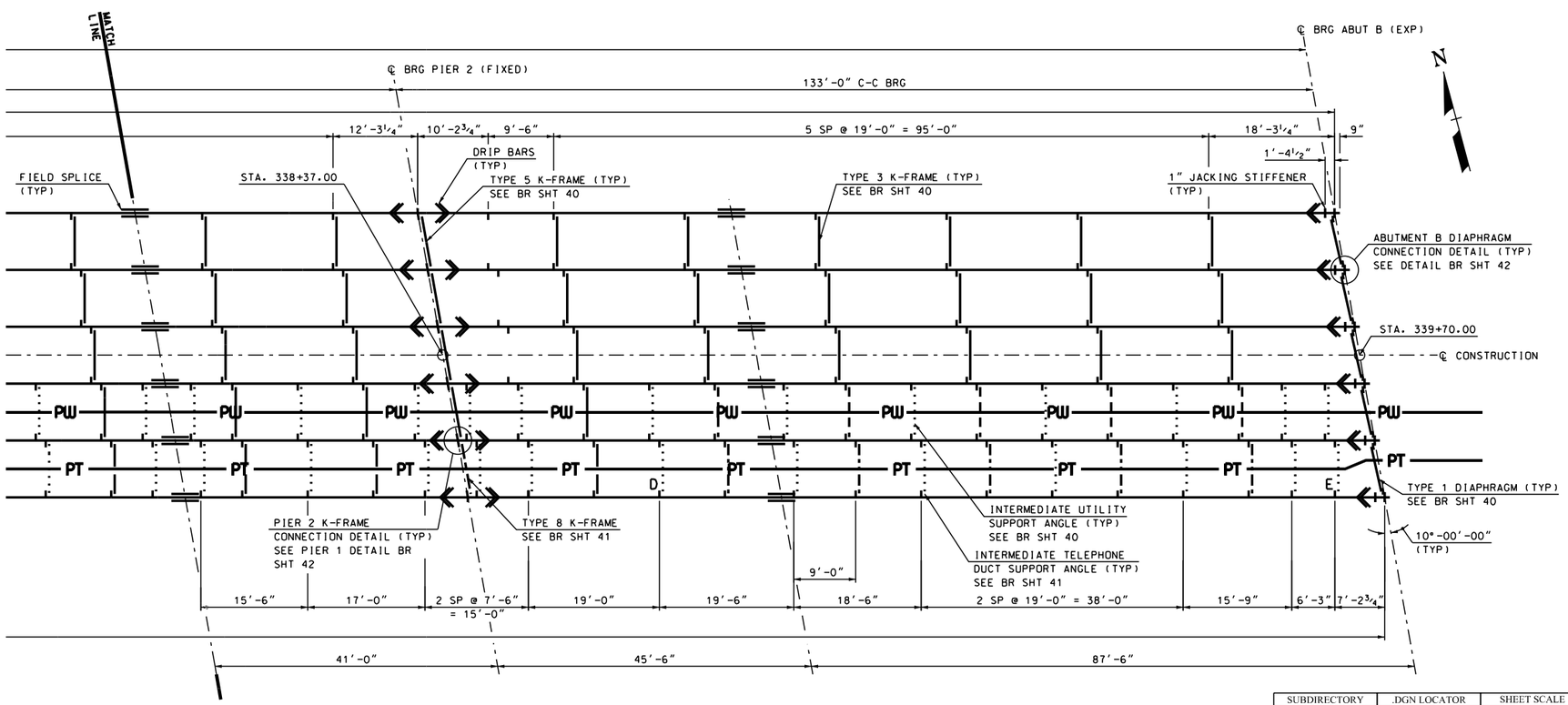

DIAPHRAGM TYPE KEY

TYPE:	LINE STYLE
TYPE 1	———
TYPE 2	· · · · · ·
TYPE 3	———
TYPE 4	———
TYPE 5	———
TYPE 6	·—·—·—·
TYPE 7	·——·——·
TYPE 8	·—·—·—·
UTILITY & TELEPHONE DUCT SUPPORT ANGLE	·····

NOTE:
FOR TELEPHONE DUCT INSTALLATION DETAILS AT LOCATIONS A - E SEE BRIDGE SHEET 41.
MEASUREMENTS FOR LOCATIONS A - E AS SHOWN ON BRIDGE SHEET 41 ARE FOR BAY 5 ONLY.

STATE OF NEW HAMPSHIRE
DEPARTMENT OF TRANSPORTATION * BUREAU OF BRIDGE DESIGN

TOWN LEBANON, NH - HARTFORD, VT | BRIDGE NO. 058\128 | STATE PROJECT 14957
LOCATION US ROUTE 4 over CONNECTICUT RIVER

FRAMING PLAN

REVISIONS AFTER PROPOSAL		BY	DATE		BY	DATE
	DESIGNED	JWP	1/11	CHECKED	RLK	2/13
	DRAWN	SMG	2/11	CHECKED	RLK	2/13
	QUANTITIES	JWP	2/13	CHECKED	PAB	2/13
	ISSUE DATE		FEDERAL PROJECT NO.		SHEET NO.	
	REV. DATE		----------		62	

BRIDGE SHEET 37 OF 71
FILE NUMBER 110-6-1
TOTAL SHEETS 157

SUBDIRECTORY	.DGN LOCATOR	SHEET SCALE
BRC/SUPER	14957Frameplan	AS NOTED

CAMBER TABLE - GIRDERLINE 1 / SPAN 1 (Inches)

Location	Abut. A	0.05	0.10	0.15	0.20	0.25	0.30	0.35	0.40	0.45	0.50	0.55	0.60	0.65	0.70	0.75	0.80	0.85	0.90	0.95	Pier #1
Beam DL Deflection	0.000	0.132	0.264	0.372	0.480	0.540	0.600	0.612	0.624	0.576	0.540	0.468	0.396	0.312	0.228	0.156	0.084	0.048	0.000	0.000	0.000
Conc. Slab Deflection	0.000	0.480	0.960	1.344	1.728	1.968	2.196	2.256	2.316	2.208	2.088	1.848	1.608	1.320	1.032	0.756	0.504	0.324	0.144	0.072	0.000
Super DL Deflection	0.000	0.192	0.384	0.540	0.696	0.792	0.888	0.912	0.936	0.900	0.852	0.756	0.672	0.552	0.432	0.324	0.204	0.132	0.060	0.024	0.000
TOTAL DL DEFLECTION	0.000	0.804	1.608	2.256	2.904	3.300	3.684	3.780	3.876	3.684	3.480	3.072	2.676	2.184	1.692	1.236	0.792	0.504	0.204	0.096	0.000
Geometric Camber	0.000	0.098	0.196	0.281	0.379	0.477	0.575	0.661	0.758	0.856	0.942	1.040	1.138	1.223	1.321	1.407	1.397	1.243	0.956	0.550	0.000
TOTAL CAMBER	0.000	0.902	1.804	2.537	3.283	3.777	4.259	4.441	4.634	4.540	4.422	4.112	3.814	3.407	3.013	2.643	2.189	1.747	1.160	0.646	0.000
WEB DEPTH	42.000	42.000	42.000	42.000	42.000	42.000	42.000	42.000	42.000	42.000	42.000	42.317	43.269	44.856	47.078	49.934	53.425	57.551	62.311	67.706	72.000

CAMBER TABLE - GIRDERLINE 1 / SPAN 2 (Inches)

Location	Pier #1	1.05	1.10	1.15	1.20	1.25	1.30	1.35	1.40	1.45	1.50	1.55	1.60	1.65	1.70	1.75	1.80	1.85	1.90	1.95	Pier #2
Beam DL Deflection	0.000	0.048	0.108	0.204	0.300	0.408	0.528	0.612	0.696	0.732	0.768	0.732	0.696	0.612	0.528	0.408	0.300	0.204	0.108	0.048	0.000
Conc. Slab Deflection	0.000	0.060	0.108	0.300	0.492	0.744	0.996	1.200	1.404	1.488	1.572	1.488	1.404	1.200	0.996	0.744	0.492	0.300	0.108	0.060	0.000
Super DL Deflection	0.000	0.036	0.084	0.180	0.288	0.408	0.528	0.624	0.720	0.756	0.792	0.756	0.720	0.624	0.528	0.408	0.288	0.180	0.084	0.036	0.000
TOTAL DL DEFLECTION	0.000	0.144	0.300	0.684	1.080	1.560	2.052	2.436	2.820	2.976	3.132	2.976	2.820	2.436	2.052	1.560	1.080	0.684	0.300	0.144	0.000
Geometric Camber	0.000	2.239	4.250	6.022	7.553	8.844	9.895	10.718	11.302	11.645	11.748	11.611	11.246	10.642	9.797	8.712	7.387	5.834	4.042	2.033	0.000
TOTAL CAMBER	0.000	2.383	4.550	6.706	8.633	10.404	11.947	13.154	14.122	14.621	14.880	14.587	14.066	13.078	11.849	10.272	8.467	6.518	4.342	2.177	0.000
WEB DEPTH	72.000	69.024	66.396	64.077	62.066	60.366	58.974	57.892	57.119	56.655	56.500	56.655	57.119	57.892	58.974	60.366	62.066	64.077	66.396	69.024	72.000

CAMBER TABLE - GIRDERLINE 1 / SPAN 3 (Inches)

Location	Pier #2	2.05	2.10	2.15	2.20	2.25	2.30	2.35	2.40	2.45	2.50	2.55	2.60	2.65	2.70	2.75	2.80	2.85	2.90	2.95	Abut. B
Beam DL Deflection	0.000	0.012	0.000	0.048	0.084	0.156	0.228	0.312	0.396	0.468	0.540	0.576	0.624	0.612	0.600	0.540	0.480	0.372	0.264	0.132	0.000
Conc. Slab Deflection	0.000	0.072	0.144	0.324	0.504	0.756	1.020	1.320	1.608	1.848	2.088	2.208	2.316	2.256	2.196	1.968	1.728	1.344	0.960	0.480	0.000
Super DL Deflection	0.000	0.024	0.060	0.132	0.204	0.324	0.432	0.552	0.660	0.756	0.852	0.900	0.936	0.912	0.888	0.792	0.696	0.540	0.384	0.192	0.000
TOTAL DL DEFLECTION	0.000	0.108	0.204	0.504	0.792	1.236	1.680	2.184	2.664	3.072	3.480	3.684	3.876	3.780	3.684	3.300	2.904	2.256	1.608	0.804	0.000
Geometric Camber	0.000	0.000	0.000	0.000	0.000	0.000	0.000	0.000	0.000	0.000	0.000	0.000	0.000	0.000	0.000	0.000	0.000	0.000	0.000	0.000	0.000
TOTAL CAMBER	0.000	0.108	0.204	0.504	0.792	1.236	1.680	2.184	2.664	3.072	3.480	3.684	3.876	3.780	3.684	3.300	2.904	2.256	1.608	0.804	0.000
WEB DEPTH	72.000	67.706	62.311	57.551	53.425	49.934	47.078	44.856	43.269	43.317	42.000	42.000	42.000	42.000	42.000	42.000	42.000	42.000	42.000	42.000	42.000

CAMBER TABLE - GIRDERLINE 2 / SPAN 1 (Inches)

Location	Abut. A	0.05	0.10	0.15	0.20	0.25	0.30	0.35	0.40	0.45	0.50	0.55	0.60	0.65	0.70	0.75	0.80	0.85	0.90	0.95	Pier #1
Beam DL Deflection	0.000	0.132	0.264	0.372	0.480	0.540	0.600	0.612	0.624	0.576	0.540	0.468	0.396	0.312	0.228	0.156	0.084	0.048	0.000	0.000	0.000
Conc. Slab Deflection	0.000	0.480	0.960	1.344	1.728	1.968	2.196	2.256	2.316	2.208	2.088	1.848	1.608	1.320	1.032	0.756	0.504	0.324	0.144	0.072	0.000
Super DL Deflection	0.000	0.192	0.384	0.540	0.696	0.792	0.888	0.912	0.936	0.900	0.852	0.756	0.672	0.552	0.432	0.324	0.204	0.132	0.060	0.024	0.000
TOTAL DL DEFLECTION	0.000	0.804	1.608	2.256	2.904	3.300	3.684	3.780	3.876	3.684	3.480	3.072	2.676	2.184	1.692	1.236	0.792	0.504	0.204	0.096	0.000
Geometric Camber	0.000	0.094	0.200	0.307	0.401	0.507	0.613	0.719	0.814	0.920	1.026	1.120	1.226	1.333	1.427	1.509	1.471	1.301	1.000	0.566	0.000
TOTAL CAMBER	0.000	0.898	1.808	2.563	3.305	3.807	4.297	4.499	4.690	4.604	4.506	4.192	3.902	3.517	3.119	2.745	2.263	1.805	1.204	0.662	0.000
WEB DEPTH	42.000	42.000	42.000	42.000	42.000	42.000	42.000	42.000	42.000	42.000	42.000	42.317	43.269	44.856	47.078	49.934	53.425	57.551	62.311	67.706	72.000

CAMBER TABLE - GIRDERLINE 2 / SPAN 2 (Inches)

Location	Pier #1	1.05	1.10	1.15	1.20	1.25	1.30	1.35	1.40	1.45	1.50	1.55	1.60	1.65	1.70	1.75	1.80	1.85	1.90	1.95	Pier #2
Beam DL Deflection	0.000	0.048	0.108	0.204	0.300	0.408	0.528	0.612	0.696	0.732	0.768	0.732	0.696	0.612	0.528	0.408	0.300	0.204	0.108	0.048	0.000
Conc. Slab Deflection	0.000	0.060	0.108	0.300	0.492	0.744	0.996	1.200	1.404	1.488	1.572	1.488	1.404	1.200	0.996	0.744	0.492	0.300	0.108	0.060	0.000
Super DL Deflection	0.000	0.036	0.084	0.180	0.288	0.408	0.528	0.624	0.720	0.756	0.792	0.756	0.720	0.624	0.528	0.408	0.288	0.180	0.084	0.036	0.000
TOTAL DL DEFLECTION	0.000	0.144	0.300	0.684	1.080	1.560	2.052	2.436	2.820	2.976	3.132	2.976	2.820	2.436	2.052	1.560	1.080	0.684	0.300	0.144	0.000
Geometric Camber	0.000	2.239	4.237	6.008	7.538	8.829	9.880	10.690	11.273	11.615	11.718	11.581	11.203	10.598	9.752	8.667	7.342	5.776	3.983	1.997	0.000
TOTAL CAMBER	0.000	2.383	4.537	6.692	8.618	10.389	11.932	13.126	14.093	14.591	14.850	14.557	14.023	13.034	11.804	10.227	8.422	6.460	4.283	2.141	0.000
WEB DEPTH	72.000	69.024	66.396	64.077	62.066	60.366	58.974	57.892	57.119	56.655	56.500	56.655	57.119	57.892	58.974	60.366	62.066	64.077	66.396	69.024	72.000

CAMBER TABLE - GIRDERLINE 2 / SPAN 3 (Inches)

Location	Pier #2	2.05	2.10	2.15	2.20	2.25	2.30	2.35	2.40	2.45	2.50	2.55	2.60	2.65	2.70	2.75	2.80	2.85	2.90	2.95	Abut. B
Beam DL Deflection	0.000	0.012	0.000	0.048	0.084	0.156	0.228	0.312	0.396	0.468	0.540	0.576	0.624	0.612	0.600	0.540	0.480	0.372	0.264	0.132	0.000
Conc. Slab Deflection	0.000	0.072	0.144	0.324	0.504	0.756	1.020	1.320	1.608	1.848	2.088	2.208	2.316	2.256	2.196	1.968	1.728	1.344	0.960	0.480	0.000
Super DL Deflection	0.000	0.024	0.060	0.132	0.204	0.324	0.432	0.552	0.660	0.756	0.852	0.900	0.936	0.912	0.888	0.792	0.696	0.540	0.384	0.192	0.000
TOTAL DL DEFLECTION	0.000	0.108	0.204	0.504	0.792	1.236	1.680	2.184	2.664	3.072	3.480	3.684	3.876	3.780	3.684	3.300	2.904	2.256	1.608	0.804	0.000
Geometric Camber	0.000	0.001	0.001	0.002	0.002	0.003	0.004	0.004	0.005	0.005	0.006	-0.005	-0.005	-0.004	-0.004	-0.003	-0.002	-0.002	-0.001	-0.001	0.000
TOTAL CAMBER	0.000	0.109	0.205	0.506	0.794	1.239	1.684	2.188	2.669	3.077	3.486	3.679	3.871	3.776	3.680	3.297	2.902	2.254	1.607	0.803	0.000
WEB DEPTH	72.000	67.706	62.311	57.551	53.425	49.934	47.078	44.856	43.269	43.317	42.000	42.000	42.000	42.000	42.000	42.000	42.000	42.000	42.000	42.000	42.000

CAMBER TABLE - GIRDERLINE 3 / SPAN 1 (Inches)

Location	Abut. A	0.05	0.10	0.15	0.20	0.25	0.30	0.35	0.40	0.45	0.50	0.55	0.60	0.65	0.70	0.75	0.80	0.85	0.90	0.95	Pier #1
Beam DL Deflection	0.000	0.132	0.264	0.372	0.480	0.540	0.600	0.612	0.624	0.576	0.540	0.468	0.396	0.312	0.228	0.156	0.084	0.048	0.000	0.000	0.000
Conc. Slab Deflection	0.000	0.480	0.960	1.344	1.728	1.968	2.196	2.256	2.316	2.208	2.088	1.848	1.608	1.320	1.032	0.756	0.504	0.324	0.144	0.072	0.000
Super DL Deflection	0.000	0.192	0.384	0.540	0.696	0.792	0.888	0.912	0.936	0.900	0.852	0.756	0.672	0.552	0.432	0.324	0.204	0.132	0.060	0.024	0.000
TOTAL DL DEFLECTION	0.000	0.804	1.608	2.256	2.904	3.300	3.684	3.780	3.876	3.684	3.480	3.072	2.676	2.184	1.692	1.236	0.792	0.504	0.204	0.096	0.000
Geometric Camber	0.000	0.115	0.217	0.332	0.446	0.549	0.664	0.778	0.893	0.995	1.110	1.225	1.327	1.442	1.556	1.623	1.570	1.372	1.055	0.593	0.000
TOTAL CAMBER	0.000	0.919	1.825	2.588	3.350	3.849	4.348	4.558	4.769	4.679	4.590	4.297	4.003	3.626	3.248	2.859	2.362	1.876	1.259	0.689	0.000
WEB DEPTH	42.000	42.000	42.000	42.000	42.000	42.000	42.000	42.000	42.000	42.000	42.000	42.317	43.269	44.856	47.078	49.934	53.425	57.551	62.311	67.706	72.000

CAMBER TABLE - GIRDERLINE 3 / SPAN 2 (Inches)

Location	Pier #1	1.05	1.10	1.15	1.20	1.25	1.30	1.35	1.40	1.45	1.50	1.55	1.60	1.65	1.70	1.75	1.80	1.85	1.90	1.95	Pier #2
Beam DL Deflection	0.000	0.048	0.108	0.204	0.300	0.408	0.528	0.612	0.696	0.732	0.768	0.732	0.696	0.612	0.528	0.408	0.300	0.204	0.108	0.048	0.000
Conc. Slab Deflection	0.000	0.060	0.108	0.300	0.492	0.744	0.996	1.200	1.404	1.488	1.572	1.488	1.404	1.200	0.996	0.744	0.492	0.300	0.108	0.060	0.000
Super DL Deflection	0.000	0.036	0.084	0.180	0.288	0.408	0.528	0.624	0.720	0.756	0.792	0.756	0.720	0.624	0.528	0.408	0.288	0.180	0.084	0.036	0.000
TOTAL DL DEFLECTION	0.000	0.144	0.300	0.684	1.080	1.560	2.052	2.436	2.820	2.976	3.132	2.976	2.820	2.436	2.052	1.560	1.080	0.684	0.300	0.144	0.000
Geometric Camber	0.000	2.238	4.248	6.006	7.524	8.814	9.864	10.674	11.256	11.586	11.688	11.550	11.172	10.554	9.708	8.622	7.296	5.730	3.924	1.962	0.000
TOTAL CAMBER	0.000	2.382	4.548	6.690	8.604	10.374	11.916	13.110	14.076	14.562	14.820	14.526	13.992	12.990	11.760	10.182	8.376	6.414	4.224	2.106	0.000
WEB DEPTH	72.000	69.024	66.396	64.077	62.066	60.366	58.974	57.892	57.119	56.655	56.500	56.655	57.119	57.892	58.974	60.366	62.066	64.077	66.396	69.024	72.000

CAMBER TABLE - GIRDERLINE 3 / SPAN 3 (Inches)

Location	Pier #2	2.05	2.10	2.15	2.20	2.25	2.30	2.35	2.40	2.45	2.50	2.55	2.60	2.65	2.70	2.75	2.80	2.85	2.90	2.95	Abut. B
Beam DL Deflection	0.000	0.012	0.000	0.048	0.084	0.156	0.228	0.312	0.396	0.468	0.540	0.576	0.624	0.612	0.600	0.540	0.480	0.372	0.264	0.132	0.000
Conc. Slab Deflection	0.000	0.072	0.144	0.324	0.504	0.756	1.020	1.320	1.608	1.848	2.088	2.208	2.316	2.256	2.196	1.968	1.728	1.344	0.960	0.480	0.000
Super DL Deflection	0.000	0.024	0.060	0.132	0.204	0.324	0.432	0.552	0.660	0.756	0.852	0.900	0.936	0.912	0.888	0.792	0.696	0.540	0.384	0.192	0.000
TOTAL DL DEFLECTION	0.000	0.108	0.204	0.504	0.792	1.236	1.680	2.184	2.664	3.072	3.480	3.684	3.876	3.780	3.684	3.300	2.904	2.256	1.608	0.804	0.000
Geometric Camber	0.000	0.000	0.000	0.000	0.000	0.000	0.000	0.000	0.000	0.000	0.000	0.000	0.000	0.000	0.000	0.000	0.000	0.000	0.000	0.000	0.000
TOTAL CAMBER	0.000	0.108	0.204	0.504	0.792	1.236	1.680	2.184	2.664	3.072	3.480	3.684	3.876	3.780	3.684	3.300	2.904	2.256	1.608	0.804	0.000
WEB DEPTH	72.000	67.706	62.311	57.551	53.425	49.934	47.078	44.856	43.269	43.317	42.000	42.000	42.000	42.000	42.000	42.000	42.000	42.000	42.000	42.000	42.000

CAMBER TABLE - GIRDERLINE 4 / SPAN 1 (Inches)

Location	Abut. A	0.05	0.10	0.15	0.20	0.25	0.30	0.35	0.40	0.45	0.50	0.55	0.60	0.65	0.70	0.75	0.80	0.85	0.90	0.95	Pier #1
Beam DL Deflection	0.000	0.132	0.264	0.372	0.480	0.540	0.600	0.612	0.624	0.576	0.540	0.468	0.396	0.312	0.228	0.156	0.084	0.048	0.000	0.000	0.000
Conc. Slab Deflection	0.000	0.480	0.960	1.344	1.728	1.968	2.196	2.256	2.316	2.208	2.088	1.848	1.608	1.320	1.032	0.756	0.504	0.324	0.144	0.072	0.000
Super DL Deflection	0.000	0.192	0.384	0.540	0.696	0.792	0.888	0.912	0.936	0.900	0.852	0.756	0.672	0.552	0.432	0.324	0.204	0.132	0.060	0.024	0.000
TOTAL DL DEFLECTION	0.000	0.804	1.608	2.256	2.904	3.300	3.684	3.780	3.876	3.684	3.480	3.072	2.676	2.184	1.692	1.236	0.792	0.504	0.204	0.096	0.000
Geometric Camber	0.000	0.122	0.245	0.355	0.478	0.600	0.710	0.833	0.955	1.078	1.188	1.310	1.433	1.543	1.666	1.716	1.634	1.433	1.087	0.610	0.000
TOTAL CAMBER	0.000	0.926	1.853	2.611	3.382	3.900	4.394	4.613	4.831	4.762	4.668	4.382	4.109	3.727	3.358	2.952	2.426	1.937	1.291	0.706	0.000
WEB DEPTH	42.000	42.000	42.000	42.000	42.000	42.000	42.000	42.000	42.000	42.000	42.000	42.317	43.269	44.856	47.078	49.934	53.425	57.551	62.311	67.706	72.000

CAMBER TABLE - GIRDERLINE 4 / SPAN 2 (Inches)

Location	Pier #1	1.05	1.10	1.15	1.20	1.25	1.30	1.35	1.40	1.45	1.50	1.55	1.60	1.65	1.70	1.75	1.80	1.85	1.90	1.95	Pier #2
Beam DL Deflection	0.000	0.048	0.108	0.204	0.300	0.408	0.528	0.612	0.696	0.732	0.768	0.732	0.696	0.612	0.528	0.408	0.300	0.204	0.108	0.048	0.000
Conc. Slab Deflection	0.000	0.060	0.108	0.300	0.492	0.744	0.996	1.200	1.404	1.488	1.572	1.488	1.404	1.200	0.996	0.744	0.492	0.300	0.108	0.060	0.000
Super DL Deflection	0.000	0.036	0.084	0.180	0.288	0.408	0.528	0.624	0.720	0.756	0.792	0.756	0.720	0.624	0.528	0.408	0.288	0.180	0.084	0.036	0.000
TOTAL DL DEFLECTION	0.000	0.144	0.300	0.684	1.080	1.560	2.052	2.436	2.820	2.976	3.132	2.976	2.820	2.436	2.052	1.560	1.080	0.684	0.300	0.144	0.000
Geometric Camber	0.000	2.225	4.223	5.980	7.510	8.787	9.836	10.646	11.215	11.545	11.646	11.495	11.117	10.498	9.652	8.553	7.226	5.660	3.853	1.927	0.000
TOTAL CAMBER	0.000	2.369	4.523	6.664	8.590	10.347	11.888	13.082	14.035	14.521	14.778	14.471	13.937	12.934	11.704	10.113	8.306	6.344	4.153	2.071	0.000
WEB DEPTH	72.000	69.024	66.396	64.077	62.066	60.366	58.974	57.892	57.119	56.655	56.500	56.655	57.119	57.892	58.974	60.366	62.066	64.077	66.396	69.024	72.000

CAMBER TABLE - GIRDERLINE 4 / SPAN 3 (Inches)

Location	Pier #2	2.05	2.10	2.15	2.20	2.25	2.30	2.35	2.40	2.45	2.50	2.55	2.60	2.65	2.70	2.75	2.80	2.85	2.90	2.95	Abut. B
Beam DL Deflection	0.000	0.012	0.000	0.048	0.084	0.156	0.228	0.312	0.396	0.468	0.540	0.576	0.624	0.612	0.600	0.540	0.480	0.372	0.264	0.132	0.000
Conc. Slab Deflection	0.000	0.072	0.144	0.324	0.504	0.756	1.020	1.320	1.608	1.848	2.088	2.208	2.316	2.256	2.196	1.968	1.728	1.344	0.960	0.480	0.000
Super DL Deflection	0.000	0.024	0.060	0.132	0.204	0.324	0.432	0.552	0.660	0.756	0.852	0.900	0.936	0.912	0.888	0.792	0.696	0.540	0.384	0.192	0.000
TOTAL DL DEFLECTION	0.000	0.108	0.204	0.504	0.792	1.236	1.680	2.184	2.664	3.072	3.480	3.684	3.876	3.780	3.684	3.300	2.904	2.256	1.608	0.804	0.000
Geometric Camber	0.000	0.001	0.001	0.002	0.002	0.003	0.004	0.004	0.005	0.005	0.006	0.007	0.007	-0.004	-0.004	-0.003	-0.002	-0.002	-0.001	-0.001	0.000
TOTAL CAMBER	0.000	0.109	0.205	0.506	0.794	1.239	1.684	2.188	2.669	3.077	3.486	3.691	3.883	3.776	3.680	3.297	2.902	2.254	1.607	0.803	0.000
WEB DEPTH	72.000	67.706	62.311	57.551	53.425	49.934	47.078	44.856	43.269	43.317	42.000	42.000	42.000	42.000	42.000	42.000	42.000	42.000	42.000	42.000	42.000

CAMBER TABLE - GIRDERLINE 5 / SPAN 1 (Inches)

Location	Abut. A	0.05	0.10	0.15	0.20	0.25	0.30	0.35	0.40	0.45	0.50	0.55	0.60	0.65	0.70	0.75	0.80	0.85	0.90	0.95	Pier #1
Beam DL Deflection	0.000	0.132	0.264	0.372	0.480	0.540	0.600	0.612	0.624	0.576	0.540	0.468	0.396	0.312	0.228	0.156	0.084	0.048	0.000	0.000	0.000
Conc. Slab Deflection	0.000	0.480	0.960	1.344	1.728	1.968	2.196	2.256	2.316	2.208	2.088	1.848	1.608	1.320	1.032	0.756	0.504	0.324	0.144	0.072	0.000
Super DL Deflection	0.000	0.192	0.384	0.540	0.696	0.792	0.888	0.912	0.936	0.900	0.852	0.756	0.672	0.552	0.432	0.324	0.204	0.132	0.060	0.024	0.000
TOTAL DL DEFLECTION	0.000	0.804	1.608	2.256	2.904	3.300	3.684	3.780	3.876	3.684	3.480	3.072	2.676	2.184	1.692	1.236	0.792	0.504	0.204	0.096	0.000
Vertical Curve Camber	0.000	0.120	0.252	0.384	0.504	0.636	0.768	0.888	1.020	1.152	1.284	1.404	1.536	1.668	1.788	1.824	1.728	1.488	1.128	0.636	0.000
TOTAL CAMBER	0.000	0.924	1.860	2.640	3.408	3.936	4.452	4.668	4.896	4.836	4.764	4.476	4.212	3.852	3.480	3.060	2.520	1.992	1.332	0.732	0.000
WEB DEPTH	42.000	42.000	42.000	42.000	42.000	42.000	42.000	42.000	42.000	42.000	42.000	42.317	43.269	44.856	47.078	49.934	53.425	57.551	62.311	67.706	72.000

CAMBER TABLE - GIRDERLINE 5 / SPAN 2 (Inches)

Location	Pier #1	1.05	1.10	1.15	1.20	1.25	1.30	1.35	1.40	1.45	1.50	1.55	1.60	1.65	1.70	1.75	1.80	1.85	1.90	1.95	Pier #2
Beam DL Deflection	0.000	0.048	0.108	0.204	0.300	0.408	0.528	0.612	0.696	0.732	0.768	0.732	0.696	0.612	0.528	0.408	0.300	0.204	0.108	0.048	0.000
Conc. Slab Deflection	0.000	0.060	0.108	0.300	0.492	0.744	0.996	1.200	1.404	1.488	1.572	1.488	1.404	1.200	0.996	0.744	0.492	0.300	0.108	0.060	0.000
Super DL Deflection	0.000	0.036	0.084	0.180	0.288	0.408	0.528	0.624	0.720	0.756	0.792	0.756	0.720	0.624	0.528	0.408	0.288	0.180	0.084	0.036	0.000
TOTAL DL DEFLECTION	0.000	0.144	0.300	0.684	1.080	1.560	2.052	2.436	2.820	2.976	3.132	2.976	2.820	2.436	2.052	1.560	1.080	0.684	0.300	0.144	0.000
Vertical Curve Camber	0.000	2.236	4.220	5.977	7.493	8.781	9.817	10.625	11.194	11.522	11.610	11.458	11.078	10.459	9.599	8.499	7.171	5.591	3.784	1.892	0.000
TOTAL CAMBER	0.000	2.380	4.520	6.661	8.573	10.341	11.869	13.061	14.014	14.498	14.742	14.434	13.898	12.895	11.651	10.059	8.251	6.275	4.084	2.036	0.000
WEB DEPTH	72.000	69.024	66.396	64.077	62.066	60.366	58.974	57.892	57.119	56.655	56.500	56.655	57.119	57.892	58.974	60.366	62.066	64.077	66.396	69.024	72.000

CAMBER TABLE - GIRDERLINE 5 / SPAN 3 (Inches)

Location	Pier #2	2.05	2.10	2.15	2.20	2.25	2.30	2.35	2.40	2.45	2.50	2.55	2.60	2.65	2.70	2.75	2.80	2.85	2.90	2.95	Abut. B
Beam DL Deflection	0.000	0.012	0.000	0.048	0.084	0.156	0.228	0.312	0.396	0.468	0.540	0.576	0.624	0.612	0.600	0.540	0.480	0.372	0.264	0.132	0.000
Conc. Slab Deflection	0.000	0.072	0.144	0.324	0.504	0.756	1.020	1.320	1.608	1.848	2.088	2.208	2.316	2.256	2.196	1.968	1.728	1.344	0.960	0.480	0.000
Super DL Deflection	0.000	0.024	0.060	0.132	0.204	0.324	0.432	0.552	0.660	0.756	0.852	0.900	0.936	0.912	0.888	0.792	0.696	0.540	0.384	0.192	0.000
TOTAL DL DEFLECTION	0.000	0.108	0.204	0.504	0.792	1.236	1.680	2.184	2.664	3.072	3.480	3.684	3.876	3.780	3.684	3.300	2.904	2.256	1.608	0.804	0.000
Vertical Curve Camber	0.000	-0.001	-0.001	-0.002	-0.002	-0.003	-0.004	-0.004	-0.005	-0.005	-0.006	-0.007	-0.007	-0.008	-0.008	-0.009	-0.010	-0.010	-0.011	-0.011	0.000
TOTAL CAMBER	0.000	0.107	0.203	0.502	0.790	1.233	1.676	2.180	2.659	3.067	3.474	3.677	3.869	3.772	3.676	3.291	2.894	2.246	1.597	0.793	0.000
WEB DEPTH	72.000	67.706	62.311	57.551	53.425	49.934	47.078	44.856	43.269	43.317	42.000	42.000	42.000	42.000	42.000	42.000	42.000	42.000	42.000	42.000	42.000

CAMBER TABLE - GIRDERLINE 6 / SPAN 1 (Inches)

Location	Abut. A	0.05	0.10	0.15	0.20	0.25	0.30	0.35	0.40	0.45	0.50	0.55	0.60	0.65	0.70	0.75	0.80	0.85	0.90	0.95	Pier #1
Beam DL Deflection	0.000	0.132	0.264	0.372	0.480	0.540	0.600	0.612	0.624	0.576	0.540	0.468	0.396	0.312	0.228	0.156	0.084	0.048	0.000	0.000	0.000
Conc. Slab Deflection	0.000	0.480	0.960	1.344	1.728	1.968	2.196	2.256	2.316	2.208	2.088	1.848	1.608	1.320	1.032	0.756	0.504	0.324	0.144	0.072	0.000
Super DL Deflection	0.000	0.192	0.384	0.540	0.696	0.792	0.888	0.912	0.936	0.900	0.852	0.756	0.672	0.552	0.432	0.324	0.204	0.132	0.060	0.024	0.000
TOTAL DL DEFLECTION	0.000	0.804	1.608	2.256	2.904	3.300	3.684	3.780	3.876	3.684	3.480	3.072	2.676	2.184	1.692	1.236	0.792	0.504	0.204	0.096	0.000
Geometric Camber	0.000	0.141	0.270	0.411	0.552	0.681	0.822	0.963	1.092	1.233	1.374	1.515	1.644	1.785	1.914	1.923	1.800	1.557	1.170	0.651	0.000
TOTAL CAMBER	0.000	0.945	1.878	2.667	3.456	3.981	4.506	4.743	4.968	4.917	4.854	4.587	4.320	3.969	3.606	3.159	2.592	2.061	1.374	0.747	0.000
WEB DEPTH	42.000	42.000	42.000	42.000	42.000	42.000	42.000	42.000	42.000	42.000	42.000	42.317	43.269	44.856	47.078	49.934	53.425	57.551	62.311	67.706	72.000

CAMBER TABLE - GIRDERLINE 6 / SPAN 2 (Inches)

Location	Pier #1	1.05	1.10	1.15	1.20	1.25	1.30	1.35	1.40	1.45	1.50	1.55	1.60	1.65	1.70	1.75	1.80	1.85	1.90	1.95	Pier #2
Beam DL Deflection	0.000	0.048	0.108	0.204	0.300	0.408	0.528	0.612	0.696	0.732	0.768	0.732	0.696	0.612	0.528	0.408	0.300	0.204	0.108	0.048	0.000
Conc. Slab Deflection	0.000	0.060	0.108	0.300	0.492	0.744	0.996	1.200	1.404	1.488	1.572	1.488	1.404	1.200	0.996	0.744	0.492	0.300	0.108	0.060	0.000
Super DL Deflection	0.000	0.036	0.084	0.180	0.288	0.408	0.528	0.624	0.720	0.756	0.792	0.756	0.720	0.624	0.528	0.408	0.288	0.180	0.084	0.036	0.000
TOTAL DL DEFLECTION	0.000	0.144	0.300	0.684	1.080	1.560	2.052	2.436	2.820	2.976	3.132	2.976	2.820	2.436	2.052	1.560	1.080	0.684	0.300	0.144	0.000
Geometric Camber	0.000	2.222	4.217	5.959	7.474	8.748	9.794	10.589	11.155	11.482	11.568	11.414	11.021	10.399	9.538	8.436	7.094	5.513	3.715	1.858	0.000
TOTAL CAMBER	0.000	2.366	4.517	6.643	8.554	10.308	11.846	13.025	13.975	14.458	14.700	14.390	13.841	12.835	11.590	9.996	8.174	6.197	4.015	2.002	0.000
WEB DEPTH	72.000	69.024	66.396	64.077	62.066	60.366	58.974	57.892	57.119	56.655	56.500	56.655	57.119	57.892	58.974	60.366	62.066	64.077	66.396	69.024	72.000

CAMBER TABLE - GIRDERLINE 6 / SPAN 3 (Inches)

Location	Pier #2	2.05	2.10	2.15	2.20	2.25	2.30	2.35	2.40	2.45	2.50	2.55	2.60	2.65	2.70	2.75	2.80	2.85	2.90	2.95	Abut. B
Beam DL Deflection	0.000	0.012	0.000	0.048	0.084	0.156	0.228	0.312	0.396	0.468	0.540	0.576	0.624	0.612	0.600	0.540	0.480	0.372	0.264	0.132	0.000
Conc. Slab Deflection	0.000	0.072	0.144	0.324	0.504	0.756	1.020	1.320	1.608	1.848	2.088	2.208	2.316	2.256	2.196	1.968	1.728	1.344	0.960	0.480	0.000
Super DL Deflection	0.000	0.024	0.060	0.132	0.204	0.324	0.432	0.552	0.660	0.756	0.852	0.900	0.936	0.912	0.888	0.792	0.696	0.540	0.384	0.192	0.000
TOTAL DL DEFLECTION	0.000	0.108	0.204	0.504	0.792	1.236	1.680	2.184	2.664	3.072	3.480	3.684	3.876	3.780	3.684	3.300	2.904	2.256	1.608	0.804	0.000
Geometric Camber	0.000	-0.001	-0.001	-0.002	-0.002	-0.003	-0.004	-0.004	-0.005	-0.005	-0.006	-0.007	-0.007	-0.008	-0.008	-0.009	-0.022	-0.022	-0.023	-0.023	0.000
TOTAL CAMBER	0.000	0.107	0.203	0.502	0.790	1.233	1.676	2.180	2.659	3.067	3.474	3.677	3.869	3.772	3.676	3.291	2.882	2.234	1.585	0.781	0.000
WEB DEPTH	72.000	67.706	62.311	57.551	53.425	49.934	47.078	44.856	43.269	43.317	42.000	42.000	42.000	42.000	42.000	42.000	42.000	42.000	42.000	42.000	42.000

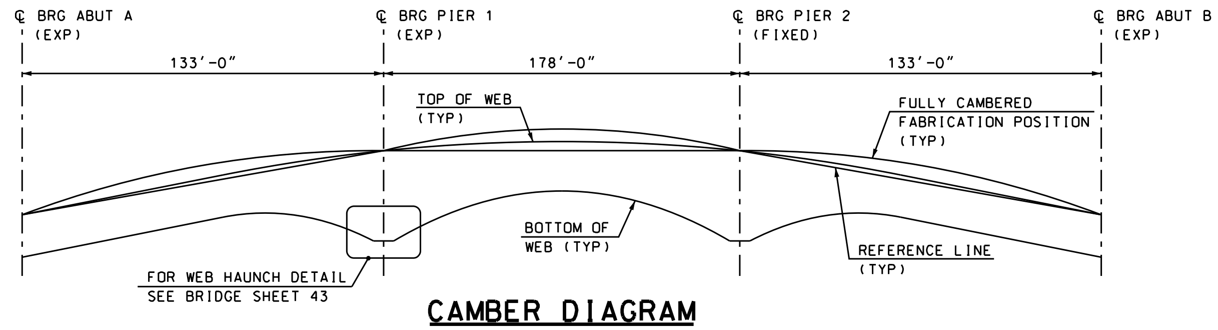

CAMBER DIAGRAM

NOT TO SCALE

SUBDIRECTORY	.DGN LOCATOR	SHEET SCALE
BRC/SUPER	14957Frameplan	AS NOTED

STATE OF NEW HAMPSHIRE

DEPARTMENT OF TRANSPORTATION * BUREAU OF BRIDGE DESIGN

TOWN LEBANON, NH - HARTFORD, VT BRIDGE NO. 058\128 STATE PROJECT 14957

LOCATION US ROUTE 4 over CONNECTICUT RIVER

CAMBER TABLES

BRIDGE SHEET 38 OF 71

REVISIONS AFTER PROPOSAL

	BY	DATE		BY	DATE
DESIGNED	JWP	1/11	CHECKED	RLK	2/13
DRAWN	SMG	2/11	CHECKED	RLK	2/13
QUANTITIES	---	---	CHECKED	---	---

FILE NUMBER 110-6-1

ISSUE DATE	FEDERAL PROJECT NO.	SHEET NO.	TOTAL SHEETS
REV. DATE	------------	63	157

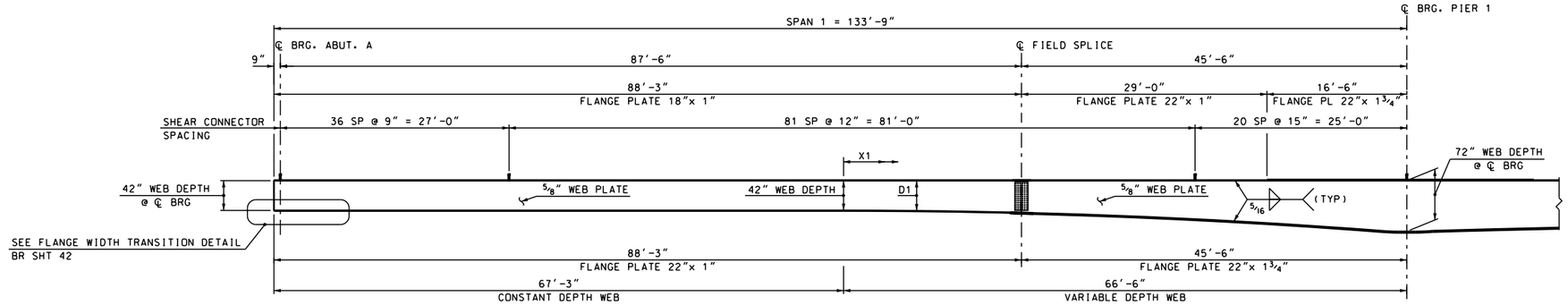

GIRDER ELEVATION AND SHEAR CONNECTOR LAYOUT - SPAN 1

SCALE: 1/8" = 1'-0"

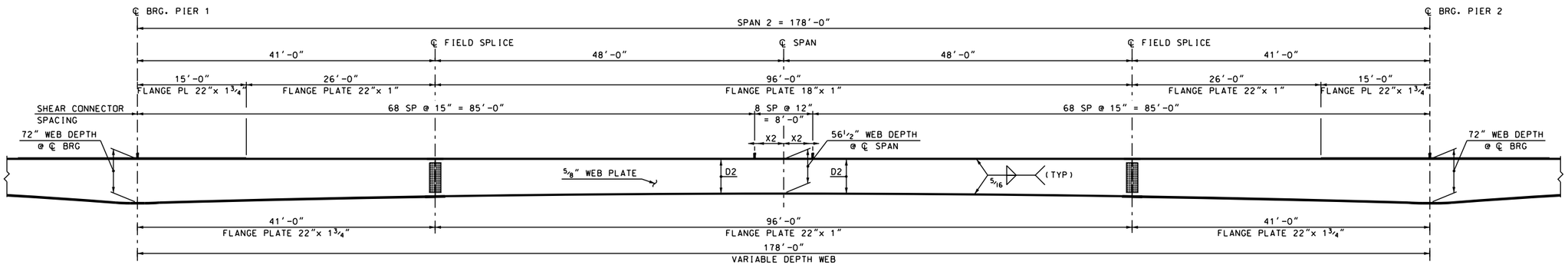

GIRDER ELEVATION AND SHEAR CONNECTOR LAYOUT - SPAN 2

SCALE: 1/8" = 1'-0"

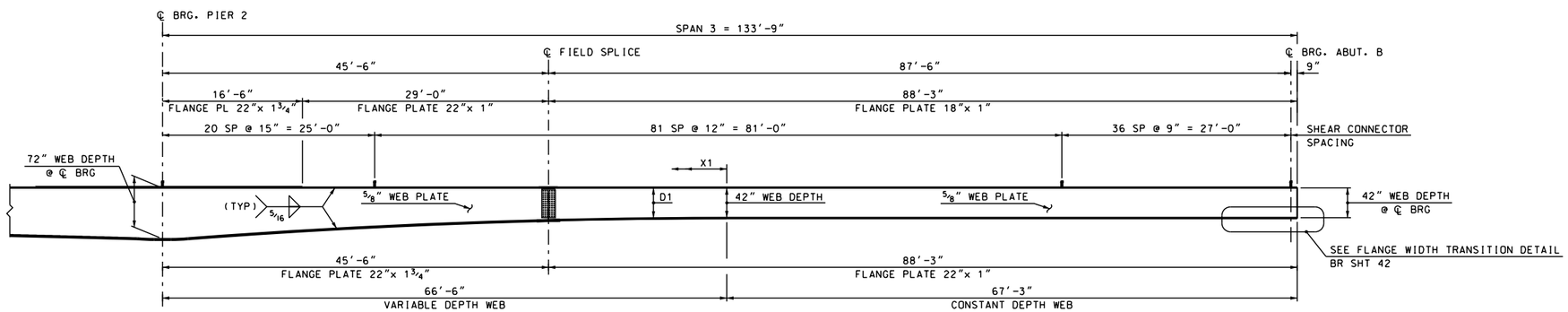

GIRDER ELEVATION AND SHEAR CONNECTOR LAYOUT - SPAN 3

SCALE: 1/8" = 1'-0"

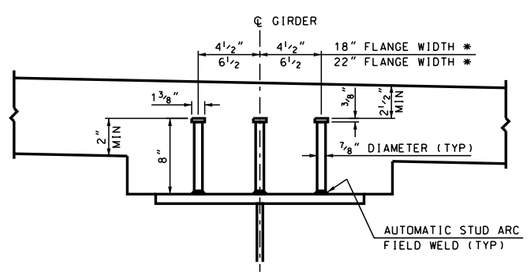

* REVISE SHEAR CONNECTOR SPACING WITH THE DECK PANEL OPTION. SEE BRIDGE SHEET 47.

SHEAR CONNECTOR DETAIL

SCALE: 1 1/2" = 1'-0"

NOTES

1. WEB DEPTH = START DEPTH + DEPTH CHANGE * (DISTANCE FROM START / PARABOLA LENGTH)^2

   D1 = 42.0000" + 28.9375" * (X1 / 63.5000')^2
   D2 = 56.5000" + 14.4375" * (X2 / 86.0000')^2

2. DEPTH CHANGE = ALGEBRAIC DIFFERENCE IN WEB DEPTH BETWEEN START LOCATION AND ℄ PIER MINUS 1 1/16" TO ACCOUNT FOR CURVED PORTION OF TRANSITION (SEE WEB HAUNCH DETAIL, BRIDGE SHEET 43).

3. X1 AND X2 MEASURED IN FEET. D1 AND D2 ARE NORMAL TO THE TOP OF WEB.

STATE OF NEW HAMPSHIRE
DEPARTMENT OF TRANSPORTATION * BUREAU OF BRIDGE DESIGN

TOWN LEBANON, NH - HARTFORD, VT | BRIDGE NO. 058\128 | STATE PROJECT 14957

LOCATION US ROUTE 4 over CONNECTICUT RIVER

GIRDER DETAILS

REVISIONS AFTER PROPOSAL		BY	DATE		BY	DATE
	DESIGNED	JWP	1/11	CHECKED	RLK	2/13
	DRAWN	SMG	2/11	CHECKED	RLK	2/13
	QUANTITIES	JWP	2/13	CHECKED	PAB	2/13

ISSUE DATE	FEDERAL PROJECT NO.	SHEET NO.
REV. DATE	----------	64

BRIDGE SHEET 39 OF 71
FILE NUMBER 110-6-1
TOTAL SHEETS 157

SUBDIRECTORY	.DGN LOCATOR	SHEET SCALE
BRC/SUPER	14957Girder	AS NOTED

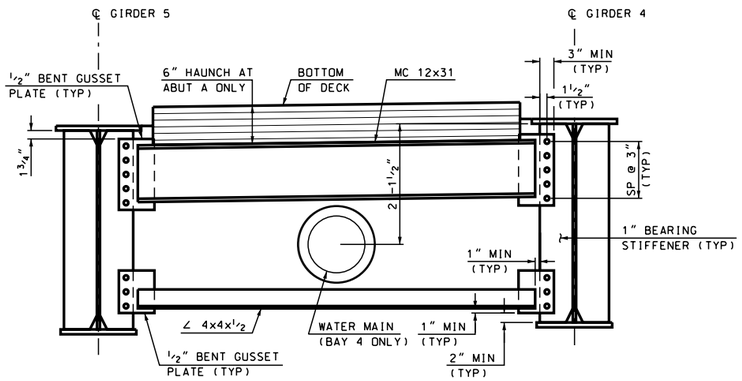

TYPE 1 DIAPHRAGM (ALONG SKEW) (8 REQUIRED)

SCALE: 3/4" = 1'-0"

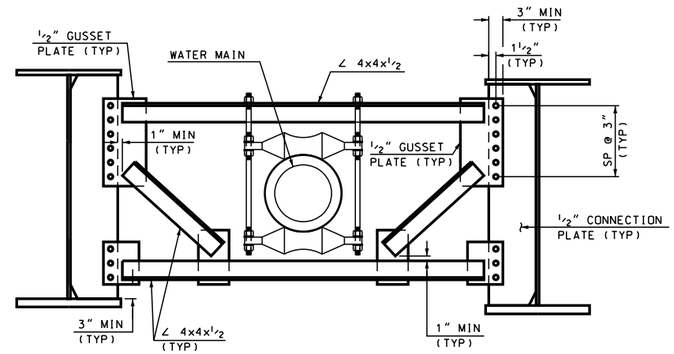

TYPE 2 K-FRAME (10 REQUIRED)

SCALE: 3/4" = 1'-0"

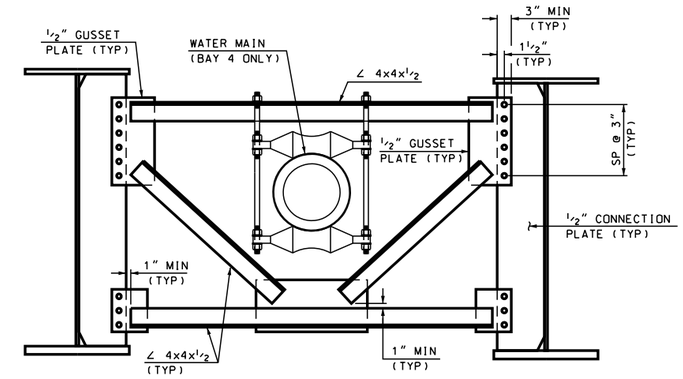

TYPE 3 K-FRAME (74 REQUIRED)

SCALE: 3/4" = 1'-0"

NOTES

1. WATER LINE IS NOT SUPPORTED AT TYPE 1, 4, & 5 CROSS FRAME LOCATIONS.
2. CROSS FRAMES IN BAYS 1-3 SHALL NOT BE FABRICATED WITH HOLES SHOWN FOR WATERLINE SUPPORT HARDWARE

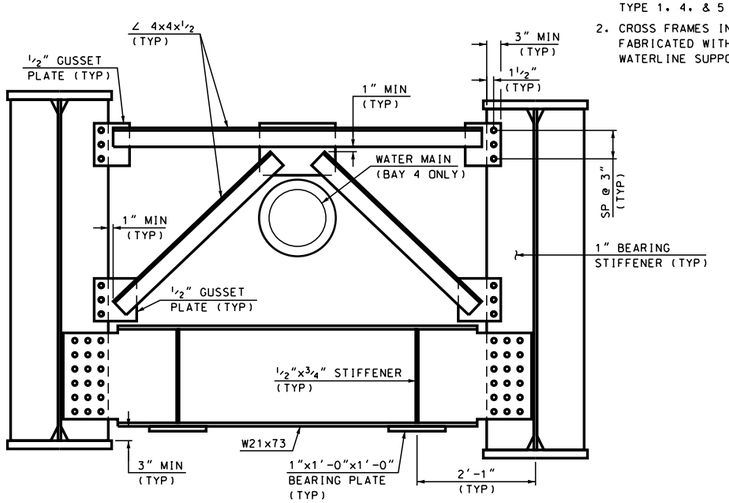

TYPE 4 K-FRAME (ALONG SKEW) (4 REQUIRED)

SCALE: 3/4" = 1'-0"

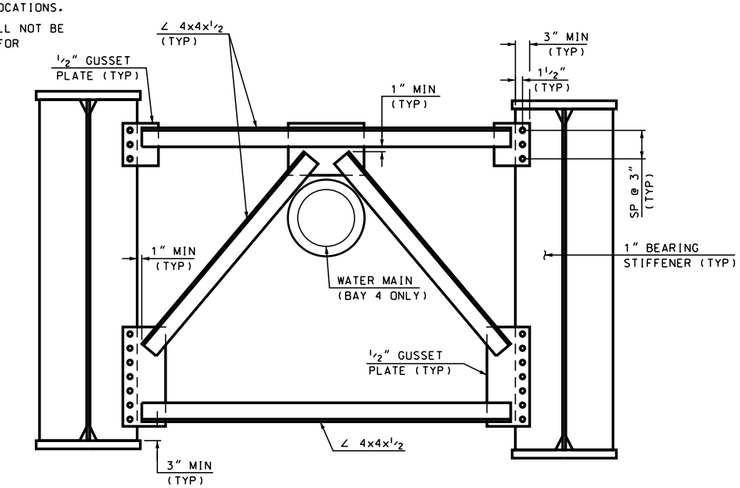

TYPE 5 K-FRAME (ALONG SKEW) (4 REQUIRED)

SCALE: 3/4" = 1'-0"

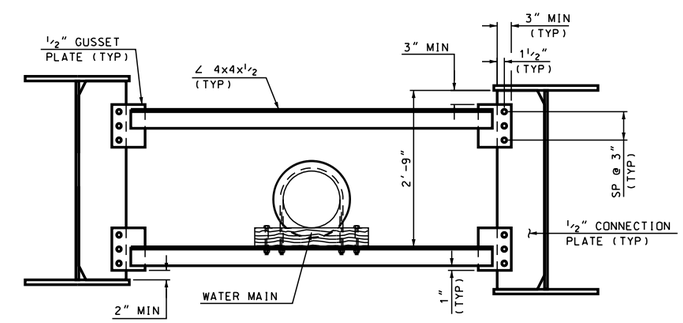

INTERMEDIATE UTILITY SUPPORT ANGLE (30 REQUIRED)

SCALE: 3/4" = 1'-0"

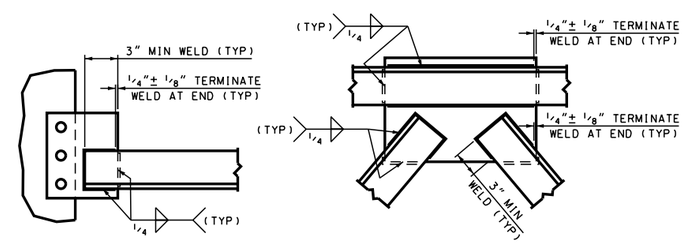

WELD TERMINATION DETAILS

SCALE: 1 1/2" = 1'-0"

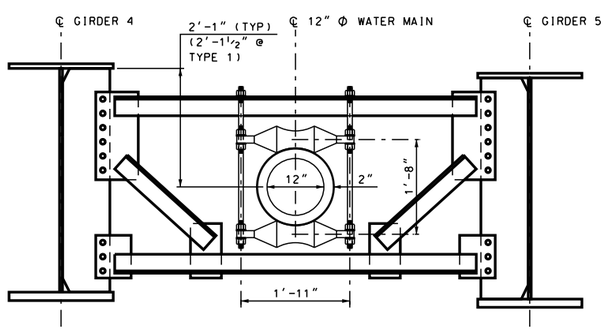

TYPICAL WATER MAIN SUPPORT TYPE 2 & 3 K-FRAME

SCALE: 3/4" = 1'-0"

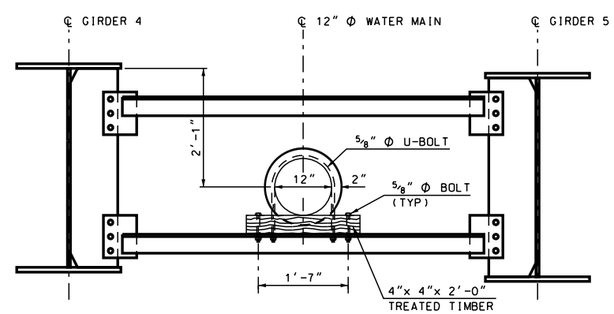

TYPICAL WATER MAIN SUPPORT UTILITY SUPPORT ANGLE

SCALE: 3/4" = 1'-0"

STATE OF NEW HAMPSHIRE
DEPARTMENT OF TRANSPORTATION * BUREAU OF BRIDGE DESIGN

TOWN LEBANON, NH - HARTFORD, VT BRIDGE NO. 058\128 STATE PROJECT 14957
LOCATION US ROUTE 4 over CONNECTICUT RIVER

CROSS FRAMES & UTILITY SUPPORT BAYS 1 - 4

REVISIONS AFTER PROPOSAL		BY	DATE		BY	DATE
	DESIGNED	JWP	1/11	CHECKED	RLK	2/13
	DRAWN	SMG	2/11	CHECKED	RLK	2/13
	QUANTITIES	JWP	2/13	CHECKED	PAB	2/13
	ISSUE DATE		FEDERAL PROJECT NO.		SHEET NO.	
	REV. DATE		----------		65	

BRIDGE SHEET 40 OF 71
FILE NUMBER 110-6-1
TOTAL SHEETS 157

SUBDIRECTORY	.DGN LOCATOR	SHEET SCALE
BRC/SUPER	14957K-frame	AS NOTED

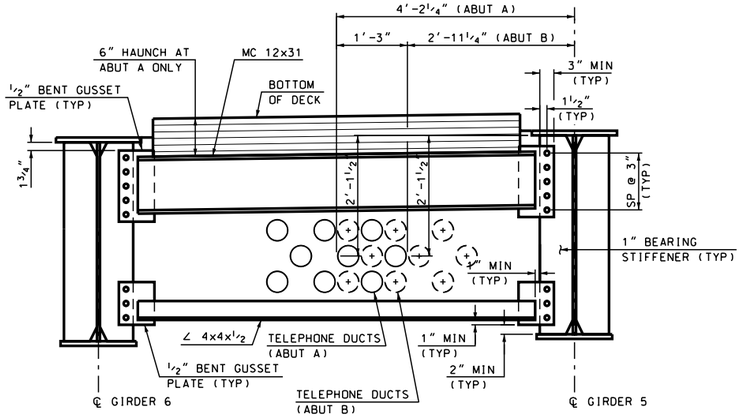

TYPE 1 DIAPHRAGM (ALONG SKEW)
(2 REQUIRED, 1 EACH ABUTMENT)

(ABUTMENT A SHOWN, ABUTMENT B OPPOSITE HAND)
SCALE: ¾" = 1'-0"

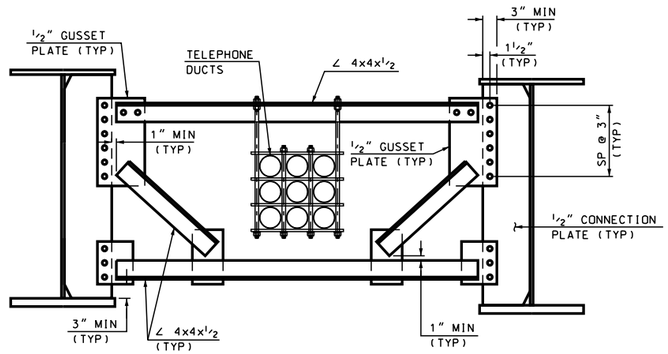

TYPE 6 K-FRAME (10 REQUIRED)

SCALE: ¾" = 1'-0"

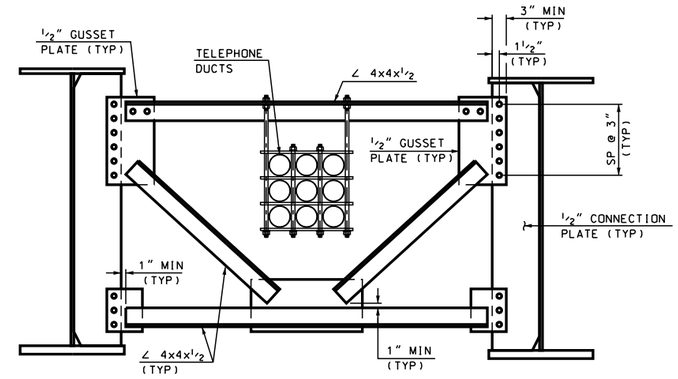

TYPE 7 K-FRAME (11 REQUIRED)

SCALE: ¾" = 1'-0"

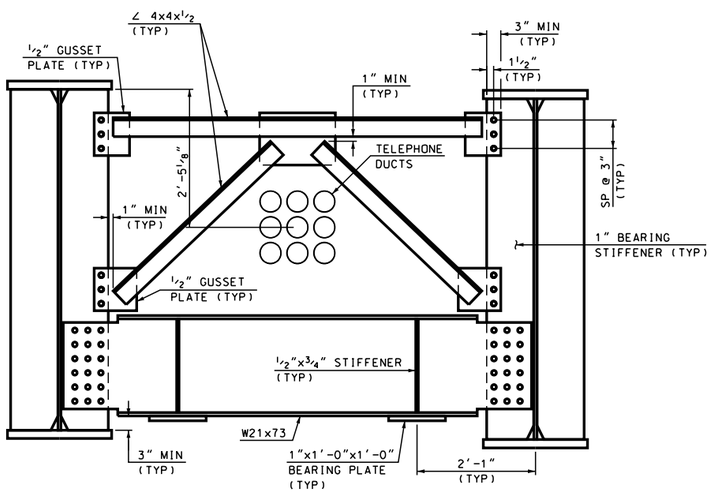

TYPE 4 K-FRAME (ALONG SKEW) (1 REQUIRED)

SCALE: ¾" = 1'-0"

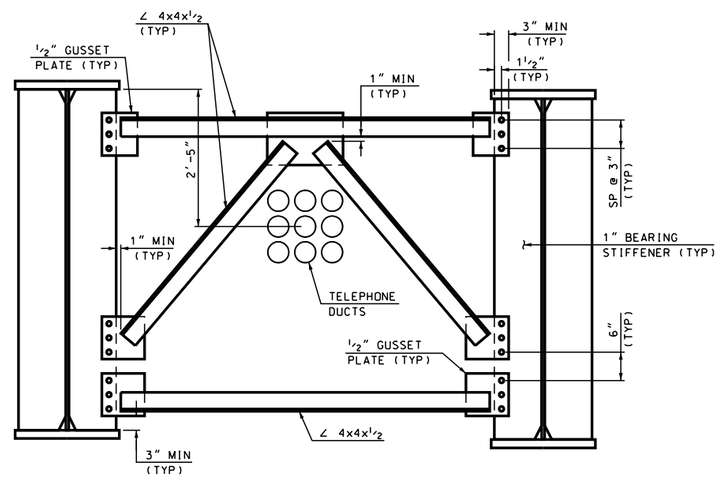

TYPE 8 K-FRAME (ALONG SKEW) (1 REQUIRED)

SCALE: ¾" = 1'-0"

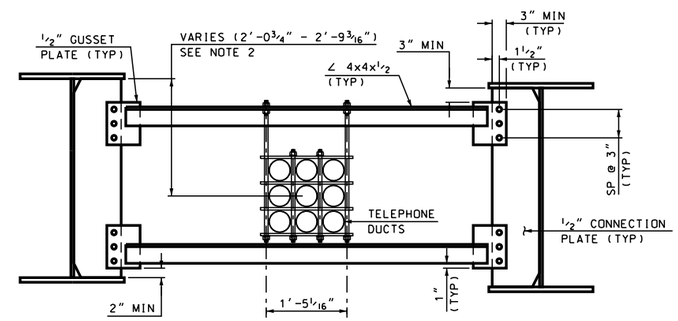

INTERMEDIATE TELEPHONE DUCT SUPPORT ANGLE (28 REQUIRED)

SCALE: ¾" = 1'-0"

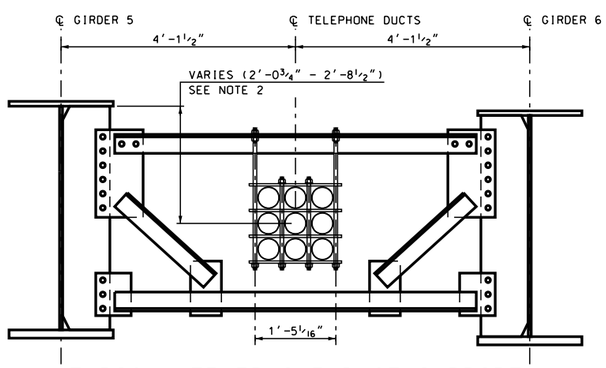

TYPICAL TELEPHONE DUCT SUPPORT
TYPE 6 & 7 K-FRAME

SCALE: ¾" = 1'-0"

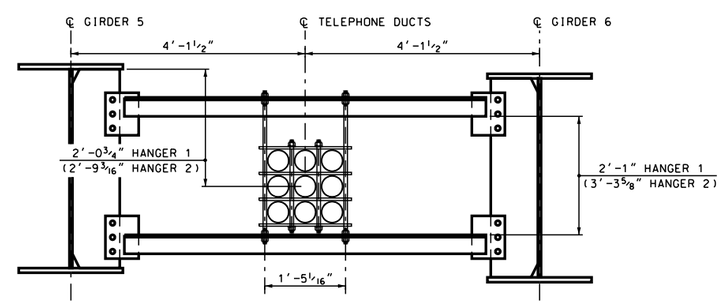

ANCHOR HANGER 1 & 2 DETAIL
TELEPHONE DUCT SUPPORT ANGLE (1 EACH REQUIRED)

(ANCHOR HANGER 1 SHOWN, ANCHOR HANGER 2 SIMILAR)
(SEE BRIDGE SHEET 37 FOR LOCATIONS)
SCALE: ¾" = 1'-0"

NOTES

1. TELEPHONE DUCTS ARE NOT SUPPORTED AT TYPE 1, 4, & 5 CROSS FRAME LOCATIONS.
2. AT TELEPHONE DUCT CROSS FRAME MEMBERS, THE CONTRACTOR IS RESPONSIBLE FOR PLACEMENT OF HOLES ONLY. TELEPHONE DUCT OWNER IS RESPONSIBLE FOR MOVING EXISTING DUCTS FROM EXISTING TEMPORARY BRIDGE TO FINAL POSITION, SUPPLYING ALL HARDWARE REQUIRED TO HANG THE DUCT BANK AND FOR ATTACHMENT OF THAT HARDWARE TO THE CROSS FRAME MEMBERS.
3. DEPTH FROM THE BOTTOM OF THE TOP FLANGE OF GIRDER 5 TO THE CENTERLINE OF THE TELEPHONE DUCT BANK VARIES AS FOLLOWS:
   LOCATION A - LOCATION B = 2'-0¾"
   LOCATION B - LOCATION C = 2'-0¾" - 2'-8½"
   LOCATION C - LOCATION D = 2'-8½" - 2'-0¾"
   LOCATION D - LOCATION E = 2'-0¾"
   SEE BRIDGE SHEET 37 FOR LOCATIONS A - E.
4. DIMENSIONS AND HOLE SPACING SHOWN SHALL BE VERIFIED BASED ON UTILITY OWNERS FINAL DESIGN.
5. FOR TYPICAL WELD TERMINATION DETAILS, SEE SHEET 40.

STATE OF NEW HAMPSHIRE
DEPARTMENT OF TRANSPORTATION * BUREAU OF BRIDGE DESIGN

TOWN LEBANON, NH - HARTFORD, VT | BRIDGE NO. 058\128 | STATE PROJECT 14957
LOCATION US ROUTE 4 over CONNECTICUT RIVER

CROSS FRAMES & UTILITY SUPPORT BAY 5

REVISIONS AFTER PROPOSAL		BY	DATE		BY	DATE
	DESIGNED	JWP	1/11	CHECKED	RLK	2/13
	DRAWN	SMG	2/11	CHECKED	RLK	2/13
	QUANTITIES	JWP	2/13	CHECKED	PAB	2/13
	ISSUE DATE		FEDERAL PROJECT NO.		SHEET NO.	
	REV. DATE		----------		66	

BRIDGE SHEET 41 OF 71
FILE NUMBER 110-6-1
TOTAL SHEETS 157

SUBDIRECTORY	.DGN LOCATOR	SHEET SCALE
BRC/SUPER	14957K-frame	AS NOTED

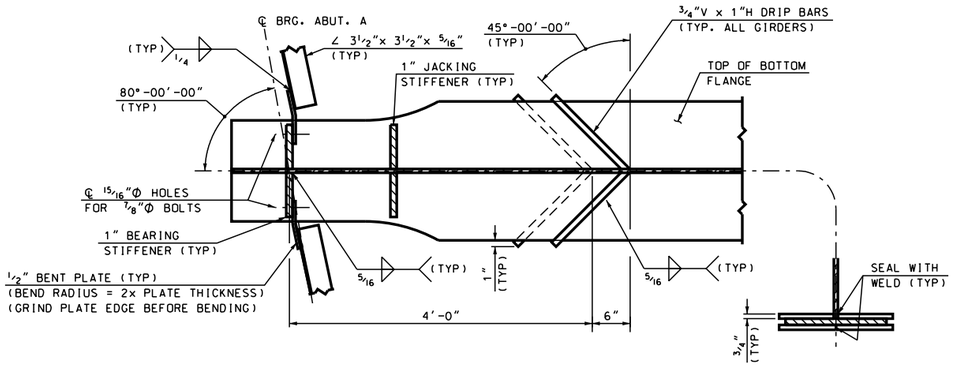

ABUTMENT A DIAPHRAGM & DRIP BAR DETAIL

SCALE: 1" = 1'-0"

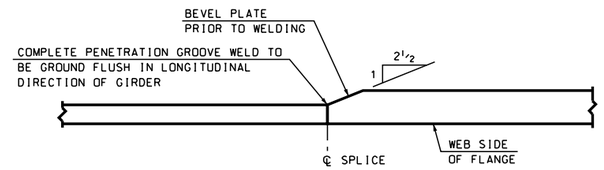

SHOP SPLICE AT FLANGE THICKNESS TRANSITION

SCALE: 3" = 1'-0"

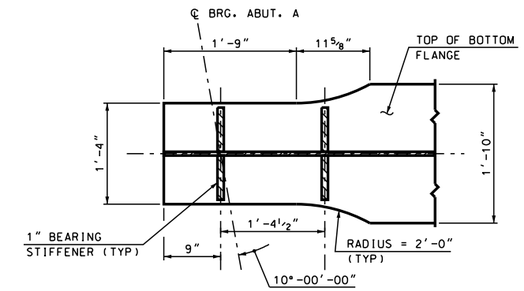

ABUTMENT A BOTTOM FLANGE WIDTH TRANSITION DETAIL

(ABUTMENT B OPPOSITE HAND)
SCALE: 1" = 1'-0"

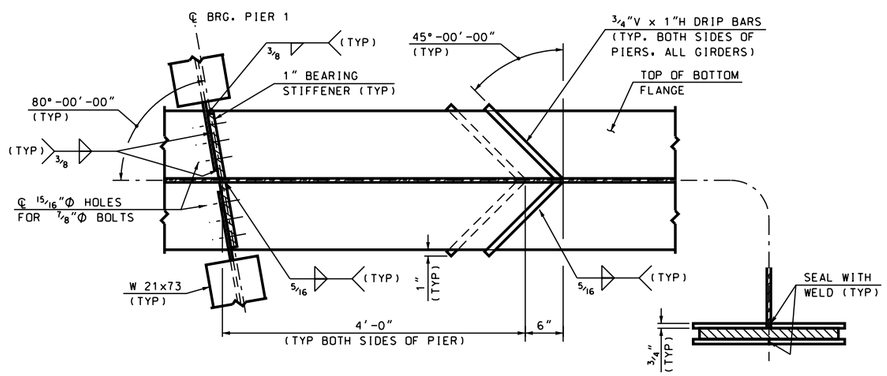

PIER 1 K-FRAME & DRIP BAR DETAIL

(PIER 2 SIMILAR)
SCALE: 1" = 1'-0"

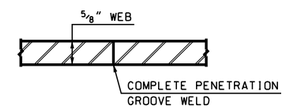

SECTION A-A

N.T.S.

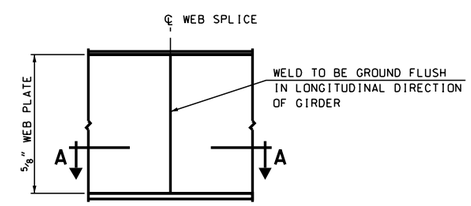

ELEVATION

SCALE: 1/2" = 1'-0"

SHOP WEB SPLICE DETAILS

SCALE: AS NOTED

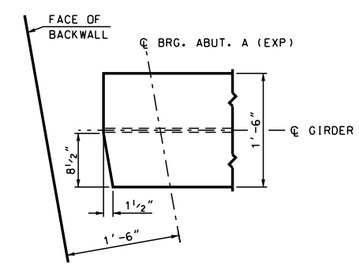

TOP FLANGE CLIP DETAIL

(ABUTMENT A ONLY)
SCALE: 1" = 1'-0"

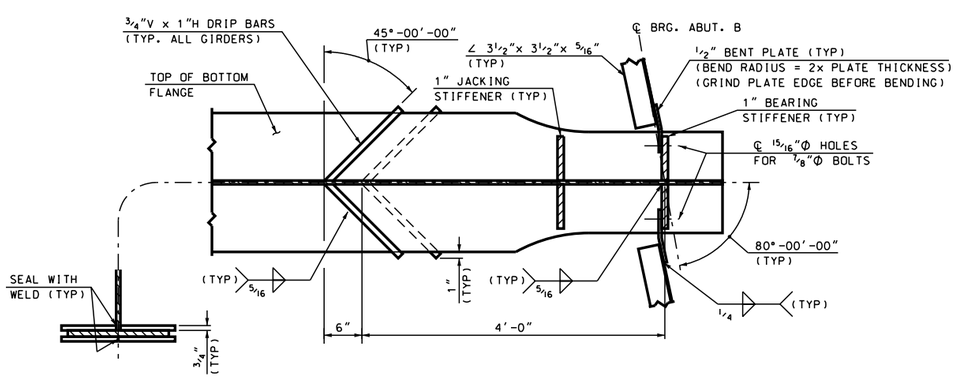

ABUTMENT B DIAPHRAGM & DRIP BAR DETAIL

SCALE: 1" = 1'-0"

STATE OF NEW HAMPSHIRE
DEPARTMENT OF TRANSPORTATION * BUREAU OF BRIDGE DESIGN

TOWN LEBANON, NH - HARTFORD, VT BRIDGE NO. 058\128 STATE PROJECT 14957

LOCATION US ROUTE 4 over CONNECTICUT RIVER

SUPERSTRUCTURE DETAILS (1 OF 3)

BRIDGE SHEET 42 OF 71

REVISIONS AFTER PROPOSAL		BY	DATE		BY	DATE
	DESIGNED	JWP	1/11	CHECKED	RLK	2/13
	DRAWN	SMG	2/11	CHECKED	RLK	2/13
	QUANTITIES	JWP	2/13	CHECKED	PAB	2/13

FILE NUMBER 110-6-1

SUBDIRECTORY	.DGN LOCATOR	SHEET SCALE	ISSUE DATE	FEDERAL PROJECT NO.	SHEET NO.	TOTAL SHEETS
BRC/SUPER	14957SSDetls	AS NOTED	REV. DATE	----------	67	157

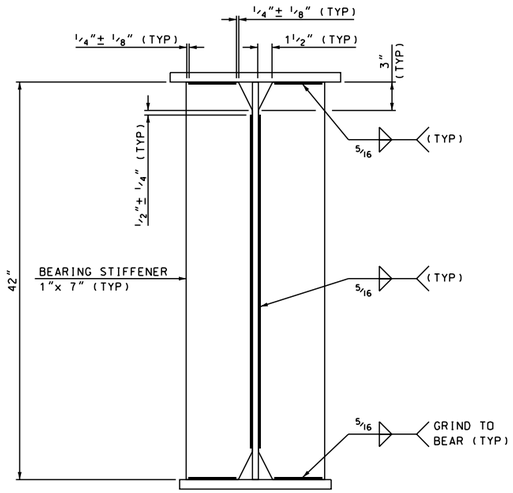

BEARING STIFFENER - ABUTMENT A & B

SCALE: 1 1/2" = 1'-0"

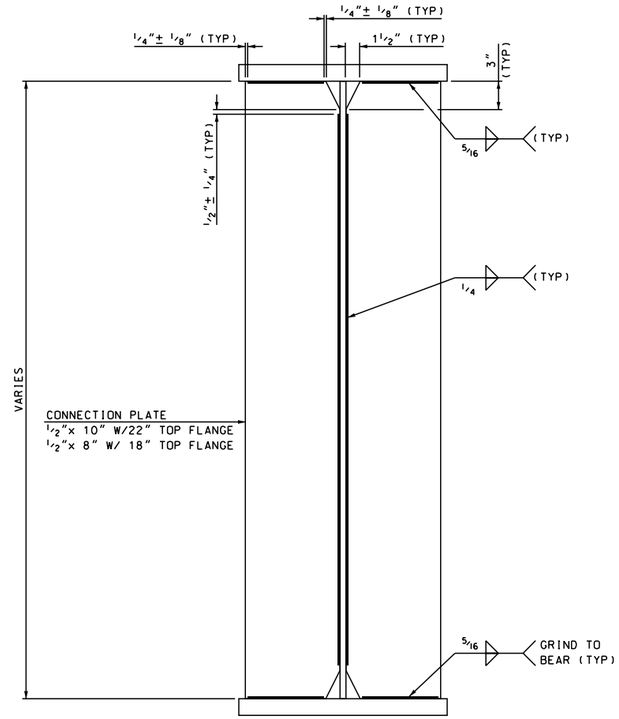

CONNECTION PLATE

SCALE: 1 1/2" = 1'-0"

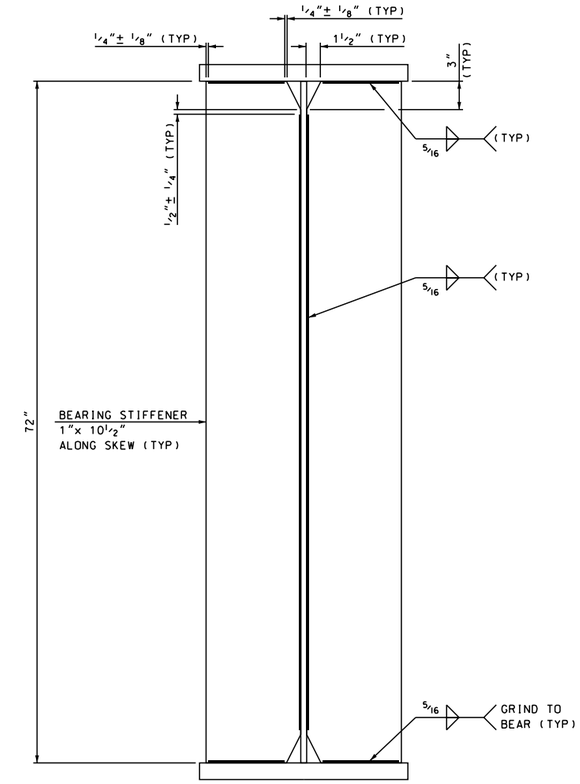

BEARING STIFFENER - PIER 1 & 2

SCALE: 1 1/2" = 1'-0"

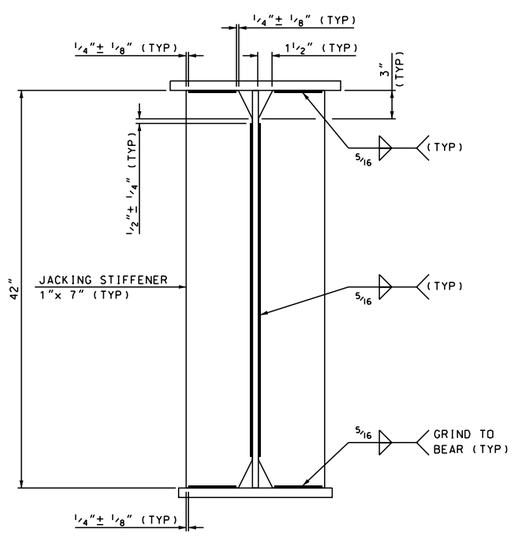

JACKING STIFFENER - ABUTMENT A & B

SCALE: 1 1/2" = 1'-0"

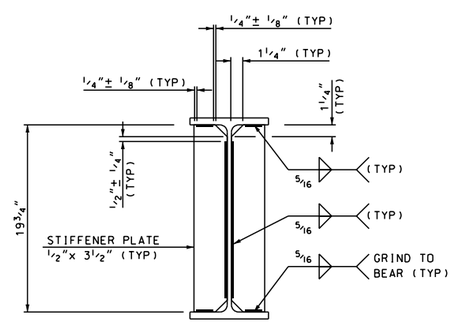

W21x73 STIFFENER PLATE

SCALE: 1 1/2" = 1'-0"

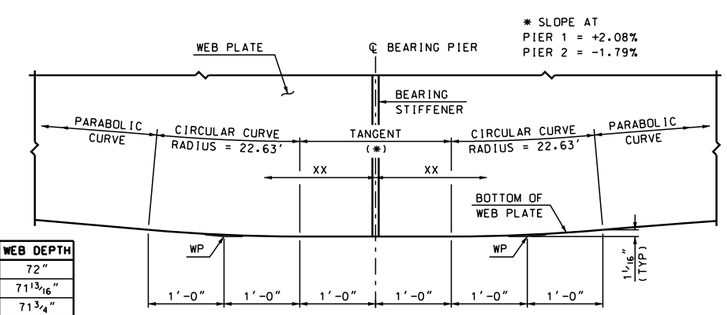

XX	WEB DEPTH
1'-0"	72"
1'-6"	71 13/16"
2'-0"	71 3/4"
2'-6"	71 3/8"
3'-0"	70 15/16"

TYPICAL WEB HAUNCH DETAIL AT PIERS

SCALE: 1" = 1'-0"

STATE OF NEW HAMPSHIRE
DEPARTMENT OF TRANSPORTATION * BUREAU OF BRIDGE DESIGN

TOWN LEBANON, NH - HARTFORD, VT BRIDGE NO. 058\128 STATE PROJECT 14957

LOCATION US ROUTE 4 over CONNECTICUT RIVER

SUPERSTRUCTURE DETAILS (2 OF 3)

BRIDGE SHEET 43 OF 71

REVISIONS AFTER PROPOSAL		BY	DATE		BY	DATE
	DESIGNED	JWP	1/11	CHECKED	RLK	2/13
	DRAWN	SMG	2/11	CHECKED	RLK	2/13
	QUANTITIES	JWP	2/13	CHECKED	PAB	2/13

FILE NUMBER 110-6-1

SUBDIRECTORY	.DGN LOCATOR	SHEET SCALE	ISSUE DATE	FEDERAL PROJECT NO.	SHEET NO.	TOTAL SHEETS
BRC/SUPER	14957SSDetls	AS NOTED	REV. DATE	----------	68	157

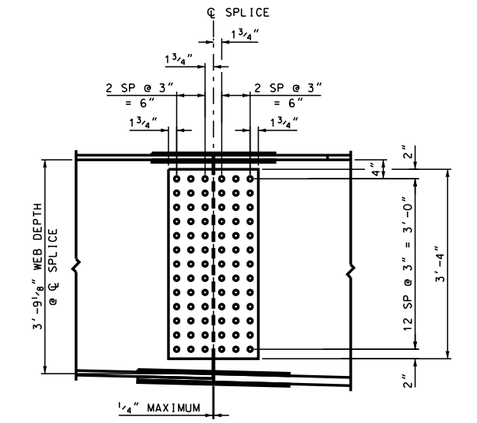

ELEVATION

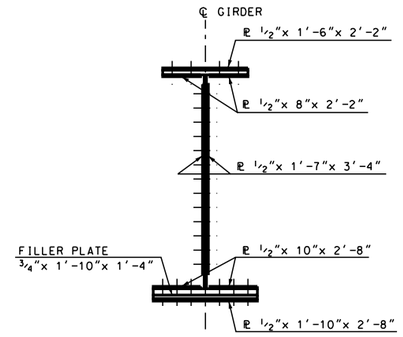

SECTION

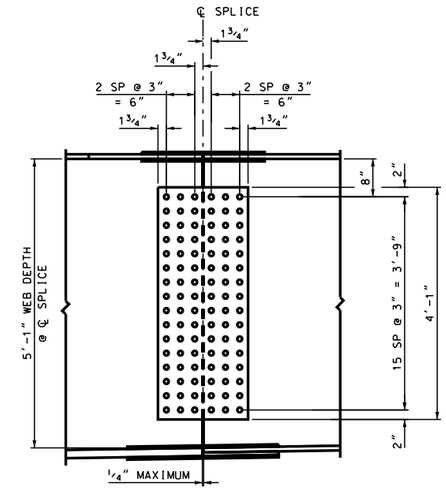

ELEVATION

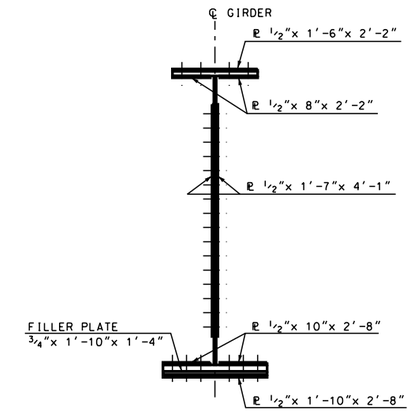

SECTION

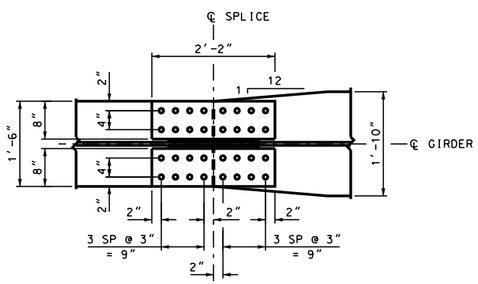

PLAN TOP FLANGE WEB SIDE

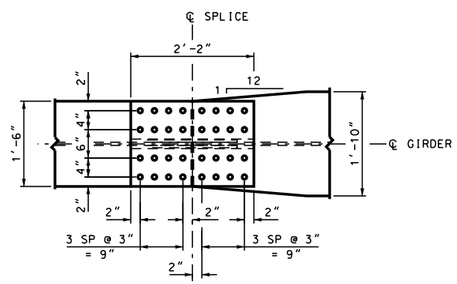

PLAN TOP FLANGE TOP SIDE

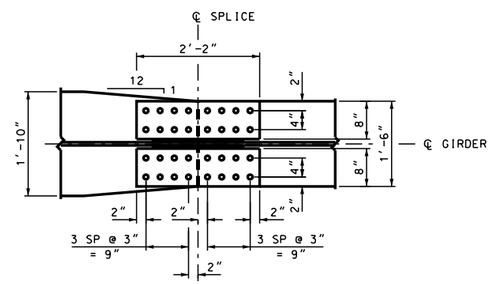

PLAN TOP FLANGE WEB SIDE

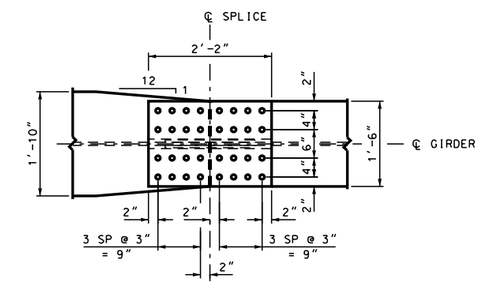

PLAN TOP FLANGE TOP SIDE

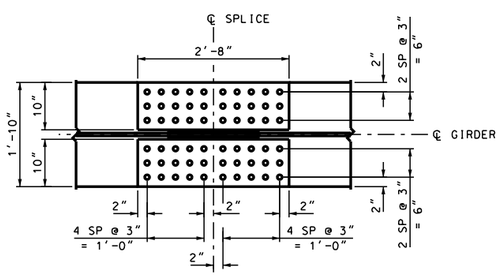

PLAN BOTTOM FLANGE WEB SIDE

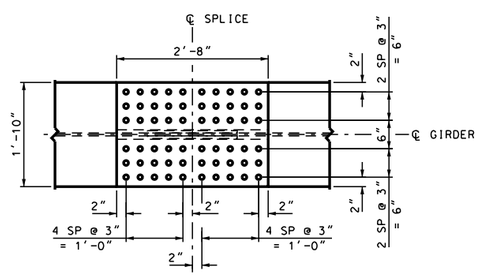

PLAN BOTTOM FLANGE BOTTOM SIDE

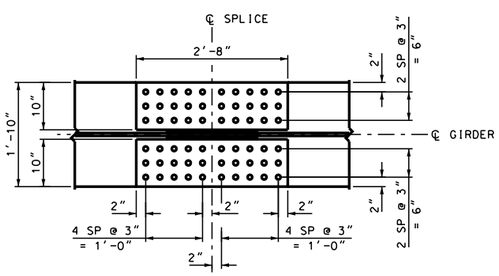

PLAN BOTTOM FLANGE WEB SIDE

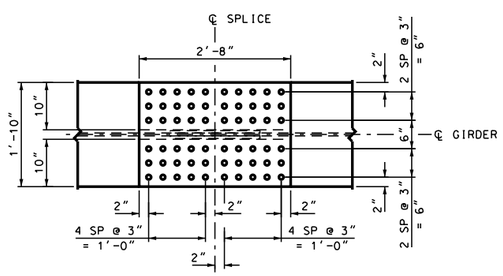

PLAN BOTTOM FLANGE BOTTOM SIDE

FIELD SPLICE DETAILS - SPANS 1 & 3

SCALE: 3/4" = 1'-0"

FIELD SPLICE DETAILS - SPAN 2

SCALE: 3/4" = 1'-0"

NOTE:
HOLES FOR FIELD SPLICES SHALL BE DRILLED 15/16" Φ IN THE SHOP WHILE GIRDERS ARE ASSEMBLED TO FIT BEARING ELEVATIONS.

STATE OF NEW HAMPSHIRE
DEPARTMENT OF TRANSPORTATION * BUREAU OF BRIDGE DESIGN

TOWN LEBANON, NH - HARTFORD, VT | BRIDGE NO. 058\128 | STATE PROJECT 14957

LOCATION US ROUTE 4 over CONNECTICUT RIVER

SUPERSTRUCTURE DETAILS (3 OF 3)

REVISIONS AFTER PROPOSAL		BY	DATE		BY	DATE
	DESIGNED	JWP	1/11	CHECKED	RLK	2/13
	DRAWN	SMG	2/11	CHECKED	RLK	2/13
	QUANTITIES	JWP	2/13	CHECKED	PAB	2/13

SUBDIRECTORY	.DGN LOCATOR	SHEET SCALE	ISSUE DATE	FEDERAL PROJECT NO.	SHEET NO.	TOTAL SHEETS
BRC/SUPER	14957SSDetls	AS NOTED	REV. DATE	----------	69	157

BRIDGE SHEET 44 OF 71

FILE NUMBER 110-6-1

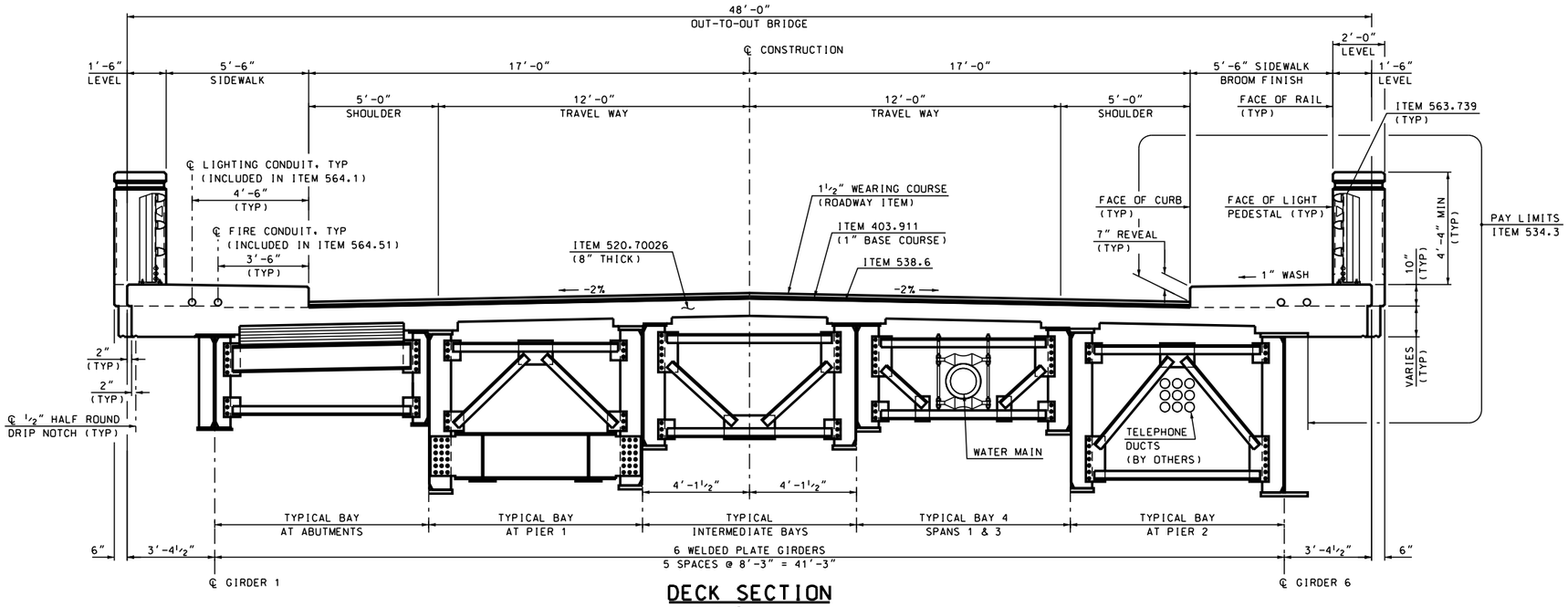

DECK SECTION

SCALE: ⅜" = 1'-0"

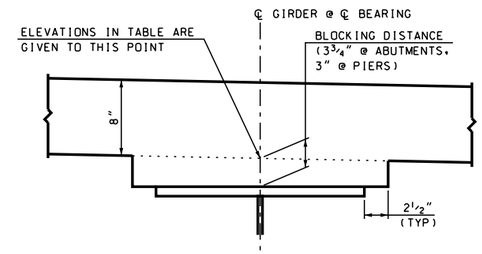

HAUNCH DETAIL

SCALE: 1½" = 1'-0"

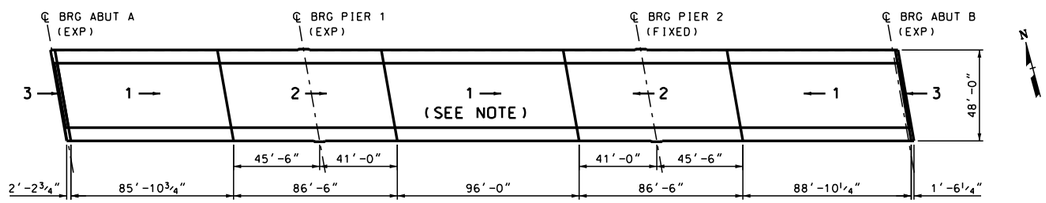

NOTE:
THIS SECTION SHALL BE PLACED LAST ON THE FIRST DAYS PLACEMENT.

BRIDGE DECK PLACEMENT SEQUENCE

SCALE: 1" = 40'-0"

ELEVATIONS AT BOTTOM OF CONCRETE DECK SLAB

SPAN 1

LOCATION	UNITS	Abut. A	0.05	0.10	0.15	0.20	0.25	0.30	0.35	0.40	0.45	0.50	0.55	0.60	0.65	0.70	0.75	0.80	0.85	0.90	0.95	Pier #1
C.L. GIRDERLINE 1	FEET	357.16	357.43	357.70	357.96	358.21	358.45	358.69	358.91	359.13	359.33	359.53	359.71	359.89	360.07	360.25	360.43	360.60	360.77	360.93	361.09	361.24
C.L. GIRDERLINE 2	FEET	357.38	357.64	357.91	358.17	358.42	358.66	358.90	359.12	359.34	359.54	359.74	359.92	360.11	360.28	360.46	360.64	360.81	360.98	361.13	361.29	361.44
C.L. GIRDERLINE 3	FEET	357.59	357.85	358.12	358.38	358.64	358.87	359.11	359.33	359.55	359.75	359.95	360.13	360.32	360.49	360.67	360.85	361.02	361.18	361.34	361.49	361.64
C.L. GIRDERLINE 4	FEET	357.63	357.90	358.17	358.42	358.68	358.92	359.16	359.38	359.60	359.80	359.99	360.18	360.36	360.54	360.72	360.89	361.06	361.22	361.37	361.53	361.67
C.L. GIRDERLINE 5	FEET	357.51	357.78	358.05	358.31	358.56	358.80	359.04	359.26	359.48	359.68	359.88	360.06	360.24	360.42	360.60	360.77	360.93	361.09	361.24	361.39	361.53
C.L. GIRDERLINE 6	FEET	357.40	357.66	357.93	358.19	358.44	358.68	358.92	359.14	359.36	359.56	359.76	359.94	360.13	360.30	360.48	360.65	360.81	360.97	361.11	361.26	361.40

SPAN 2

LOCATION	UNITS	Pier #1	1.05	1.10	1.15	1.20	1.25	1.30	1.35	1.40	1.45	1.50	1.55	1.60	1.65	1.70	1.75	1.80	1.85	1.90	1.95	Pier #2
C.L. GIRDERLINE 1	FEET	361.24	361.44	361.63	361.80	361.96	362.11	362.24	362.34	362.42	362.46	362.49	362.48	362.44	362.38	362.29	362.17	362.04	361.89	361.73	361.56	361.39
C.L. GIRDERLINE 2	FEET	361.44	361.64	361.82	361.99	362.15	362.29	362.42	362.51	362.59	362.63	362.66	362.64	362.60	362.53	362.44	362.32	362.19	362.04	361.87	361.70	361.53
C.L. GIRDERLINE 3	FEET	361.64	361.83	362.01	362.18	362.33	362.47	362.59	362.69	362.76	362.80	362.82	362.80	362.76	362.69	362.59	362.47	362.33	362.18	362.01	361.84	361.67
C.L. GIRDERLINE 4	FEET	361.67	361.86	362.03	362.20	362.35	362.49	362.61	362.70	362.77	362.80	362.82	362.80	362.75	362.68	362.58	362.46	362.31	362.16	361.98	361.81	361.64
C.L. GIRDERLINE 5	FEET	361.53	361.72	361.89	362.06	362.21	362.34	362.45	362.54	362.61	362.64	362.66	362.63	362.58	362.50	362.40	362.27	362.13	361.97	361.79	361.62	361.45
C.L. GIRDERLINE 6	FEET	361.40	361.59	361.75	361.92	362.06	362.19	362.30	362.38	362.45	362.48	362.49	362.46	362.41	362.33	362.22	362.09	361.94	361.78	361.60	361.43	361.26

SPAN 3

LOCATION	UNITS	Pier #2	2.05	2.10	2.15	2.20	2.25	2.30	2.35	2.40	2.45	2.50	2.55	2.60	2.65	2.70	2.75	2.80	2.85	2.90	2.95	Abut. B
C.L. GIRDERLINE 1	FEET	361.39	361.28	361.16	361.06	360.96	360.87	360.78	360.70	360.61	360.52	360.42	360.32	360.21	360.08	359.95	359.80	359.65	359.49	359.32	359.15	358.97
C.L. GIRDERLINE 2	FEET	361.53	361.41	361.30	361.20	361.10	361.01	360.92	360.84	360.75	360.66	360.56	360.45	360.35	360.22	360.09	359.94	359.79	359.63	359.46	359.28	359.11
C.L. GIRDERLINE 3	FEET	361.67	361.55	361.44	361.34	361.24	361.15	361.06	360.97	360.89	360.79	360.70	360.59	360.48	360.36	360.23	360.08	359.93	359.77	359.60	359.42	359.25
C.L. GIRDERLINE 4	FEET	361.64	361.53	361.41	361.31	361.21	361.12	361.03	360.95	360.86	360.77	360.67	360.57	360.46	360.33	360.20	360.05	359.90	359.74	359.57	359.40	359.22
C.L. GIRDERLINE 5	FEET	361.45	361.33	361.22	361.12	361.02	360.93	360.84	360.76	360.67	360.58	360.48	360.38	360.27	360.14	360.01	359.86	359.71	359.55	359.38	359.20	359.03
C.L. GIRDERLINE 6	FEET	361.26	361.14	361.03	360.93	360.83	360.74	360.65	360.57	360.48	360.38	360.29	360.18	360.08	359.95	359.82	359.67	359.52	359.36	359.19	359.01	358.84

DECK SLAB ELEVATION NOTES

1. AFTER THE STRUCTURAL STEEL IS ERECTED BUT BEFORE THE DECK FORMS ARE BUILT, ELEVATIONS ON THE TOP FLANGE OF THE GIRDERS ARE OBTAINED AT THE POINTS INDICATED IN THE TABLE. THE DIFFERENCE BETWEEN THE ELEVATIONS OBTAINED AND THOSE IN THE TABLE IS THE ACTUAL BLOCKING DISTANCE FROM THE TOP OF THE GIRDER TO THE BOTTOM OF THE DECK SLAB AT THE ℄ OF THE GIRDER. SEE ELEVATION TABLE AND HAUNCH DETAIL THIS SHEET.
2. ELEVATIONS SHOWN IN THE TABLE ARE FINISHED BOTTOM OF SLAB ELEVATIONS ADJUSTED FOR TOTAL DEAD LOAD DEFLECTION, LESS THE DEFLECTION DUE TO GIRDER WEIGHT.

STATE OF NEW HAMPSHIRE
DEPARTMENT OF TRANSPORTATION * BUREAU OF BRIDGE DESIGN

TOWN LEBANON, NH - HARTFORD, VT BRIDGE NO. 058\128 STATE PROJECT 14957
LOCATION US ROUTE 4 over CONNECTICUT RIVER

DECK SECTION

REVISIONS AFTER PROPOSAL		BY	DATE		BY	DATE
	DESIGNED	SWJ	10/08	CHECKED	RLK	2/13
	DRAWN	SMG	10/08	CHECKED	RLK	2/13
	QUANTITIES	JWP	2/13	CHECKED	RLK	2/13
	ISSUE DATE		FEDERAL PROJECT NO.		SHEET NO.	
	REV. DATE		----------		70	

BRIDGE SHEET 45 OF 71
FILE NUMBER 110-6-1
TOTAL SHEETS 157

SUBDIRECTORY	.DGN LOCATOR	SHEET SCALE
BRC/SUPER	14957Decksect	AS NOTED

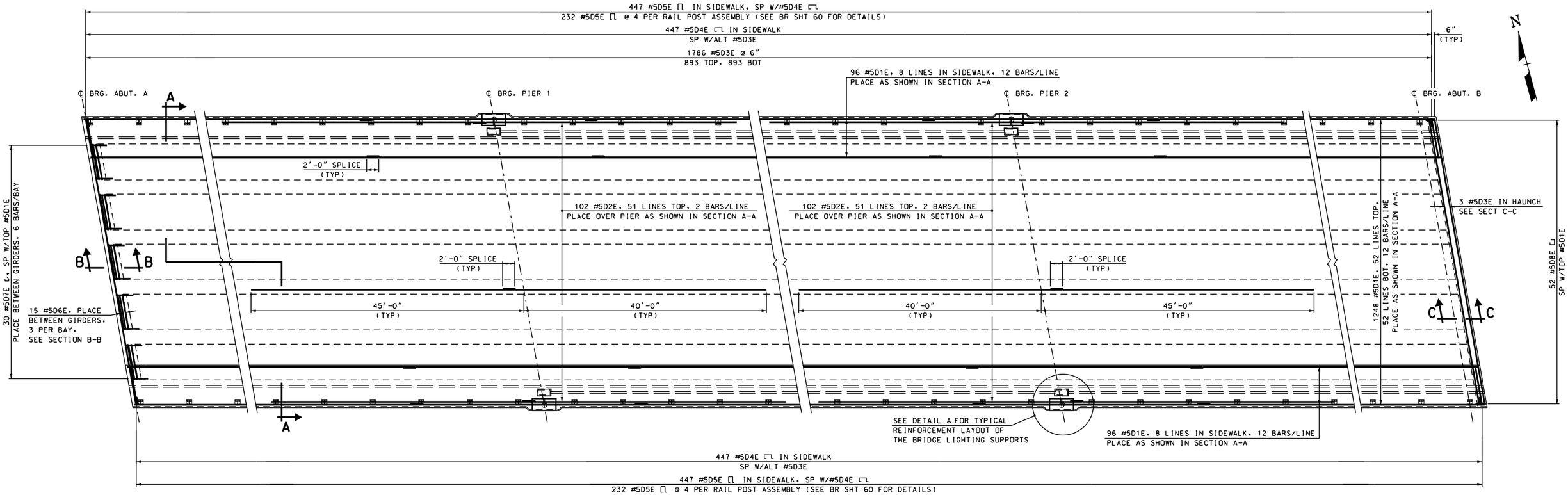

PLAN - DECK REINFORCEMENT

SCALE: 1/8" = 1'-0"

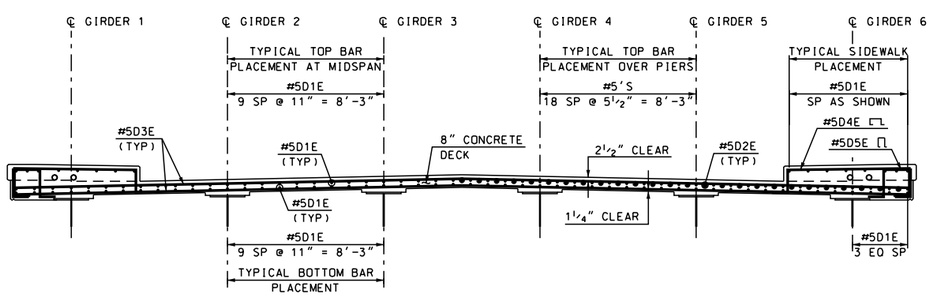

SECTION A-A

SCALE: 1/4" = 1'-0"

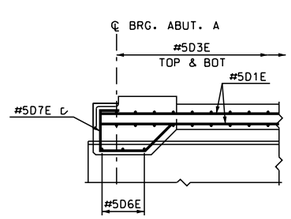

SECTION B-B

SCALE: 1/2" = 1'-0"

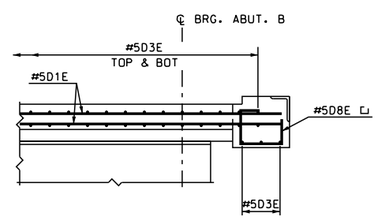

SECTION C-C

SCALE: 1/2" = 1'-0"

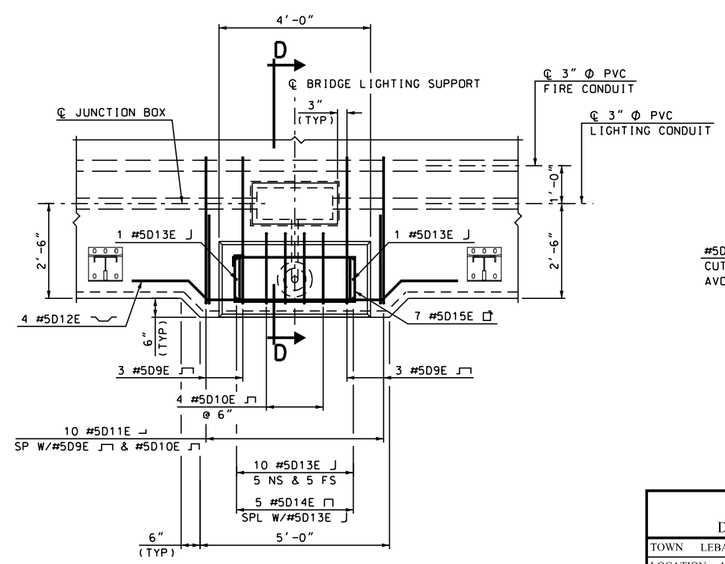

DETAIL A

SCALE: 1/2" = 1'-0"

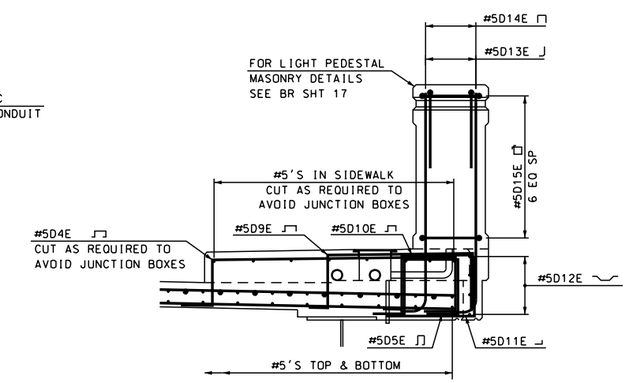

SECTION D-D

SCALE: 1/2" = 1'-0"

STATE OF NEW HAMPSHIRE
DEPARTMENT OF TRANSPORTATION * BUREAU OF BRIDGE DESIGN

TOWN LEBANON, NH - HARTFORD, VT BRIDGE NO. 058\128 STATE PROJECT 14957

LOCATION US ROUTE 4 over CONNECTICUT RIVER

DECK REINFORCING

REVISIONS AFTER PROPOSAL		BY	DATE		BY	DATE
	DESIGNED	DDT	1/11	CHECKED	RLK	2/13
	DRAWN	SMG	1/11	CHECKED	RLK	2/13
	QUANTITIES	JWP	2/13	CHECKED	RLK	2/13

ISSUE DATE
REV. DATE

FEDERAL PROJECT NO. ----------

BRIDGE SHEET 46 OF 71
FILE NUMBER 110-6-1
SHEET NO. 71
TOTAL SHEETS 157

SUBDIRECTORY	.DGN LOCATOR	SHEET SCALE
BRC/PRELIM	14957DeckBars	AS NOTED

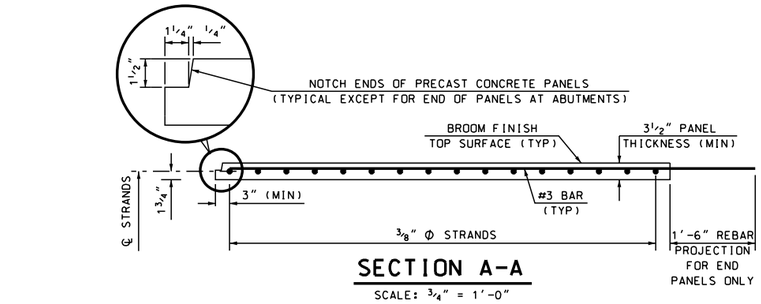

SECTION A-A

SCALE: 3/4" = 1'-0"

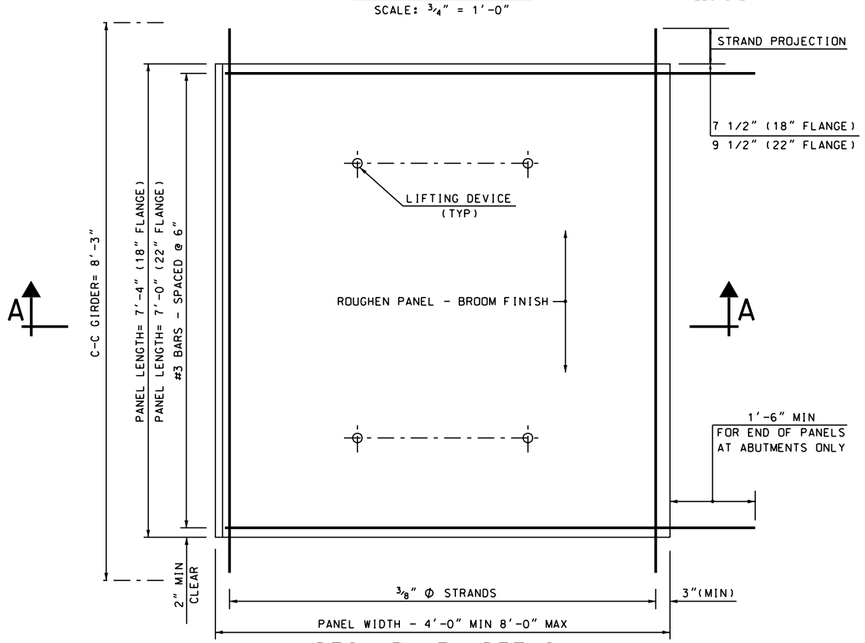

DECK PANEL DETAIL

SCALE: 3/4" = 1'-0"

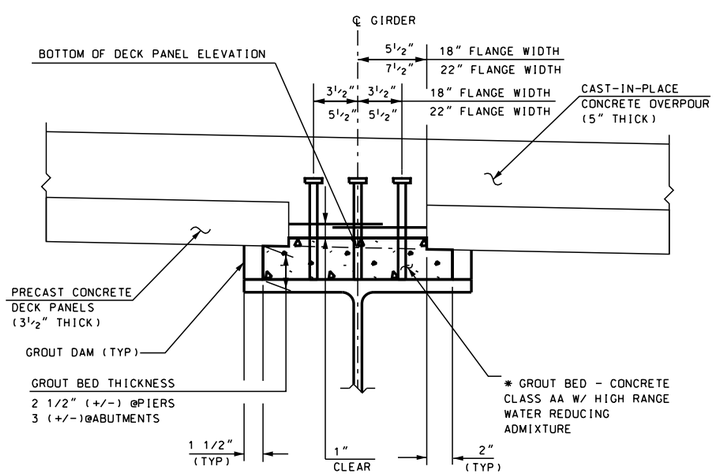

* ENSURE GROUT FLOWS UNDER PANEL FOR COMPLETE BEARING

STEEL GIRDER HAUNCH DETAIL

SCALE: 2" = 1'-0"

PRESTRESSED CONCRETE DECK PANEL NOTES

(1) CONCRETE STRENGTH: f'c = 6.000 PSI MINIMUM AT 28 DAYS } SEE TABLE A & B
f'ci = 4.000 PSI MINIMUM } DECK PANEL DESIGN

(2) PRESTRESSING STRANDS SHALL BE 3/8 in. DIAMETER, GRADE 270 SEVEN WIRE LOW-RELAXATION TYPE, CONFORMING TO THE REQUIREMENTS OF ASTM A416. ALL STRANDS SHALL BE PULLED TO HAVE A NET TENSION OF 17.2 KIPS PER STRAND AFTER ALLOWING FOR CHUCK SLIPPAGE.

(3) THE TOP SURFACE OF THE DECK PANELS SHALL BE BROOMED TO A SURFACE ROUGHNESS OF 0.06 in. BROOM THE SURFACE PARALLEL TO THE STRAND.

(4) IF HIGH DENSITY EXPANDED POLYSTYRENE FOAM IS USED AS A TEMPORARY SUPPORT, IT SHALL BE CUT IN THE FIELD TO THE REQUIRED HEIGHT AND AFFIXED TO THE GIRDERS WITH AN APPROVED HIGH STRENGTH ADHESIVE.

(5) PANEL LIFTING LOCATIONS SHOWN ARE ADVISORY ONLY. ACTUAL LIFTING LOCATIONS SHALL BE DETERMINED BY THE FABRICATOR AND INDICATED ON THE SHOP DRAWINGS.

(6) CORROSION INHIBITOR (CALCIUM NITRITE) ADMIXTURE SHALL BE USED.

(7) SEE STANDARD SPECIFICATIONS AND SPECIAL PROVISIONS FOR SECTIONS 520 AND 528 FOR ADDITIONAL INFORMATION.

(8) IF LEVELING SCREWS ARE USED, THEY SHALL BE COMPLETELY REMOVED AFTER THE GROUTING OPERATIONS AND PRIOR TO DECK PLACEMENT. HOLES LEFT BY LEVELING SCREWS SHALL BE FILLED WITH AN APPROVED GROUT PRIOR TO DECK PLACEMENT.

(9) TEMPORARY BRACING BETWEEN ENDS OF PANELS SHALL BE SUPPLIED AS REQUIRED TO PREVENT PANEL MOVEMENT TRANSVERSE TO THE GIRDERS.

(10) THE FOLLOWING DECK PANEL DESIGN INFORMATION SHALL BE USED FOR THIS PROJECT:
C-C GIRDER SPACING = 8'-3"
PANEL LENGTH = 7'-0" or 7'-4"
PANEL THICKNESS = 3 1/2"
CONCRETE STRENGTHS
f'ci = 4000 psi
f'c = 6000 psi

STRAND SPACING = 8"

MULTI SPANS ONLY:
REINFORCEMENT REQUIREMENTS IN TOP MAT OVER PIER TO MEET LRFD 6.10.1.7
BAR SIZE = #5
BAR SPACING = 5 1/2"

(11) REINFORCING IN PANELS SHALL BE BLACK BAR EXCEPT FOR END PANELS AT ABUTMENTS WHICH SHALL HAVE EPOXY COATED REBAR. CAST-IN-PLACE OVERPOUR SHALL HAVE EPOXY COATED REBAR AND FOLLOW LAYOUT OF TOP MAT OF STEEL SHOWN ON THE DECK REINFORCING SHEET.

DECK SLAB ELEVATION NOTES

1) AFTER THE GIRDERS ARE ERECTED AND BEFORE PRECAST DECK PANELS ARE SET, ELEVATIONS ON THE TOP FLANGE OF THE GIRDERS ARE TO BE OBTAINED AT THE POINTS INDICATED IN "BOTTOM OF SLAB ELEVATION TABLE" DETAILED IN THE PLANS AND GIRDER HAUNCH DETAILS ON THIS SHEET.

2) THE BOTTOM OF SLAB ELEVATIONS SHALL BE ADJUSTED BY THE DIFFERENCE BETWEEN THE CAST-IN-PLACE DECK THICKNESS AND THE TOTAL COMPOSITE DECK THICKNESS.

TABLE A - DECK PANEL DESIGN (STEEL-GIRDER)

C-C GIRDER SPACING	PANEL LENGTH	PANEL THICKNESS	f'ci (PSI)	f'c (PSI)	STRAND SPACING
8'-3"	7'-0"	3 1/2"	4000	6000	6"
8'-3"	7'-4"	3 1/2"	4000	6000	6"

TABLE C - GIRDER DEFLECTIONS DUE TO DECK PANEL DEAD LOAD (INCHES)

	0L	.1L	.2L	.3L	.4L	.5L	.6L	.7L	.8L	.9L	1.0L
SPAN 1	0.000	0.414	0.749	0.953	1.003	0.906	0.697	0.443	0.214	0.063	0.000
SPAN 2	0.000	0.049	0.217	0.435	0.615	0.684	0.615	0.434	0.216	0.048	0.000
SPAN 3	0.000	0.063	0.214	0.441	0.695	0.903	1.000	0.951	0.748	0.413	0.000

DESIGN CRITERIA:

- LIVE LOAD = HL-93
- ALLOWABLE TENSION IN CONCRETE = $0.19\sqrt{f'c}$
- MAXIMUM INITIAL COMPRESSION = 0.750 ksi (W/ f'ci = 4 ksi)
- C-I-P DECK THICKNESS = 5"
- PAVEMENT THICKNESS = 2 1/2"
- STEEL FLANGE WIDTH = 18"or 22"
- GROUT DAM WIDTH = 1 1/2"
- GROUT BED THICKNESS < 3 3/8"

NOTE TO CONTRACTOR:

1) IF LEVELING SCREWS ARE USED, THEIR LOCATIONS SHALL NOT INTERFERE WITH THE LOCATION OF THE GROUT DAM.

STATE OF NEW HAMPSHIRE
DEPARTMENT OF TRANSPORTATION * BUREAU OF BRIDGE DESIGN

TOWN LEBANON, NH - HARTFORD, VT BRIDGE NO. 058\128 STATE PROJECT 14957
LOCATION US ROUTE 4 over CONNECTICUT RIVER

PRECAST CONCRETE DECK PANEL DETAILS

REVISIONS AFTER PROPOSAL		BY	DATE		BY	DATE
	DESIGNED	NHDOT	4/02	CHECKED	NHDOT	4/02
	DRAWN	NHDOT	12/10	CHECKED	NHDOT	12/10
	QUANTITIES	---	---	CHECKED	---	---
	ISSUE DATE	4/02	FEDERAL PROJECT NO.		SHEET NO.	
	REV. DATE	12/10	----------		72	

BRIDGE SHEET 47 OF 71
FILE NUMBER 110-6-1
TOTAL SHEETS 157

SUBDIRECTORY	.DGN LOCATOR	SHEET SCALE
BRC\Standards	DK PANELS_HL93	AS NOTED

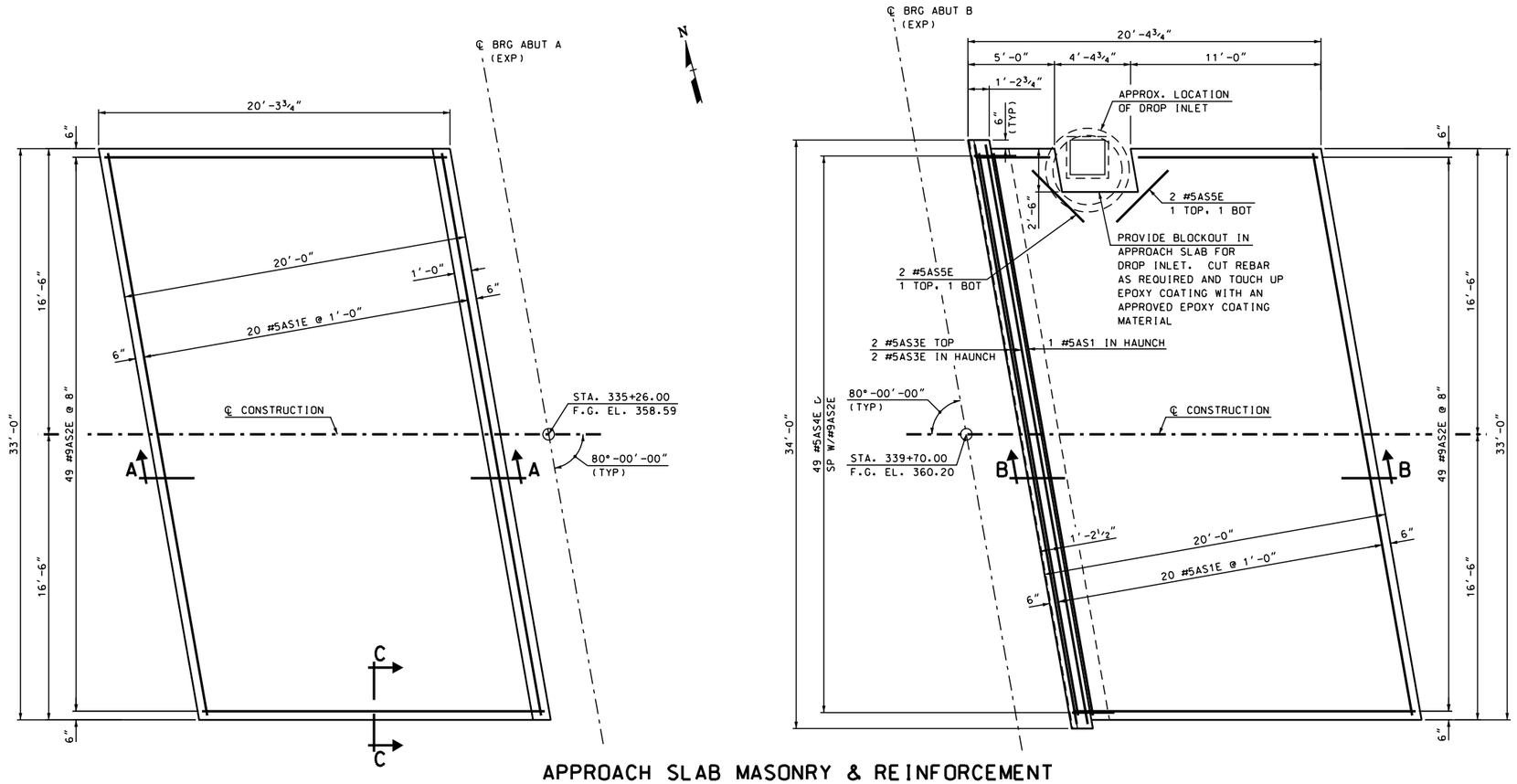

NOTE:
CONTRACTOR SHALL PROVIDE SUPPORT FOR
TOP #5AS5E SUBSIDIARY TO ITEM 544.2.

APPROACH SLAB MASONRY & REINFORCEMENT

SCALE: ¼" = 1'-0"

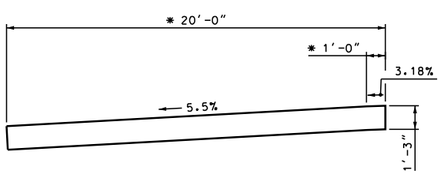

SECTION A-A - MASONRY

SCALE: ¼" = 1'-0"

* = NORMAL TO ABUTMENT

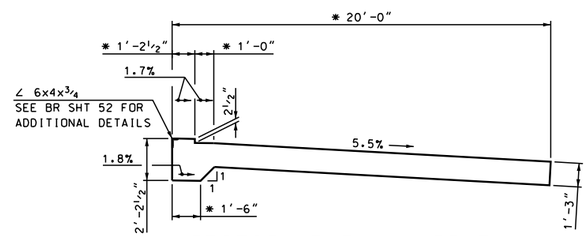

SECTION B-B - MASONRY

SCALE: ¼" = 1'-0"

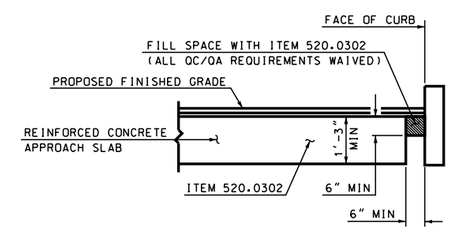

SECTION C-C

SCALE: ½" = 1'-0"

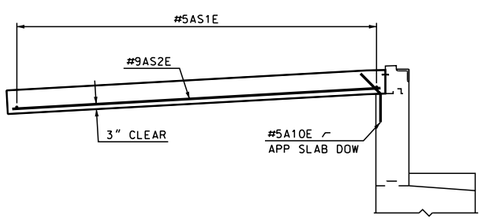

SECTION A-A - REINFORCEMENT

SCALE: ¼" = 1'-0"

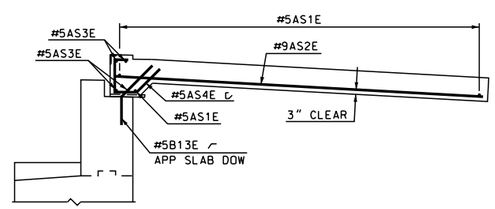

SECTION B-B - REINFORCEMENT

SCALE: ¼" = 1'-0"

STATE OF NEW HAMPSHIRE
DEPARTMENT OF TRANSPORTATION * BUREAU OF BRIDGE DESIGN

TOWN LEBANON, NH - HARTFORD, VT BRIDGE NO. 058\128 STATE PROJECT 14957

LOCATION US ROUTE 4 over CONNECTICUT RIVER

APPROACH SLAB MASONRY & REINFORCEMENT

REVISIONS AFTER PROPOSAL		BY	DATE		BY	DATE
	DESIGNED	JWP	2/12	CHECKED	MGL	2/13
	DRAWN	SMG	2/12	CHECKED	MGL	2/13
	QUANTITIES	JWP	2/13	CHECKED	PAB	2/13

SUBDIRECTORY	.DGN LOCATOR	SHEET SCALE	ISSUE DATE	FEDERAL PROJECT NO.	SHEET NO.	TOTAL SHEETS
BRC\SUPER	14957Appslab	AS NOTED	REV. DATE	----------	73	157

BRIDGE SHEET 48 OF 71

FILE NUMBER 110-6-1

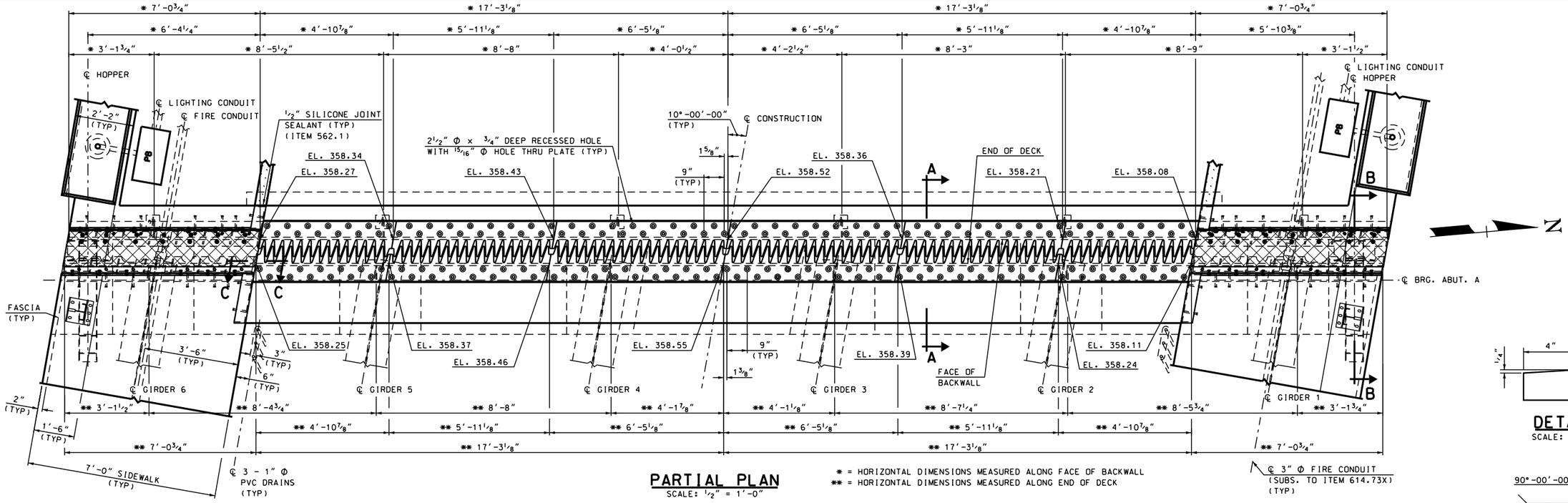

PARTIAL PLAN

SCALE: ½" = 1'-0"

* = HORIZONTAL DIMENSIONS MEASURED ALONG FACE OF BACKWALL
** = HORIZONTAL DIMENSIONS MEASURED ALONG END OF DECK

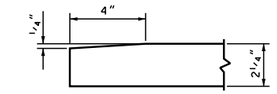

DETAIL A

SCALE: 3" = 1'-0"

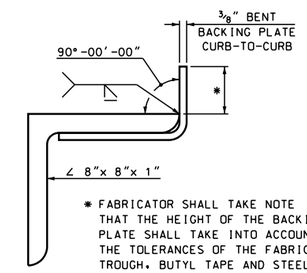

* FABRICATOR SHALL TAKE NOTE THAT THE HEIGHT OF THE BACKING PLATE SHALL TAKE INTO ACCOUNT THE TOLERANCES OF THE FABRIC TROUGH, BUTYL TAPE AND STEEL PLATE THICKNESS.

DETAIL B

SCALE: 3" = 1'-0"

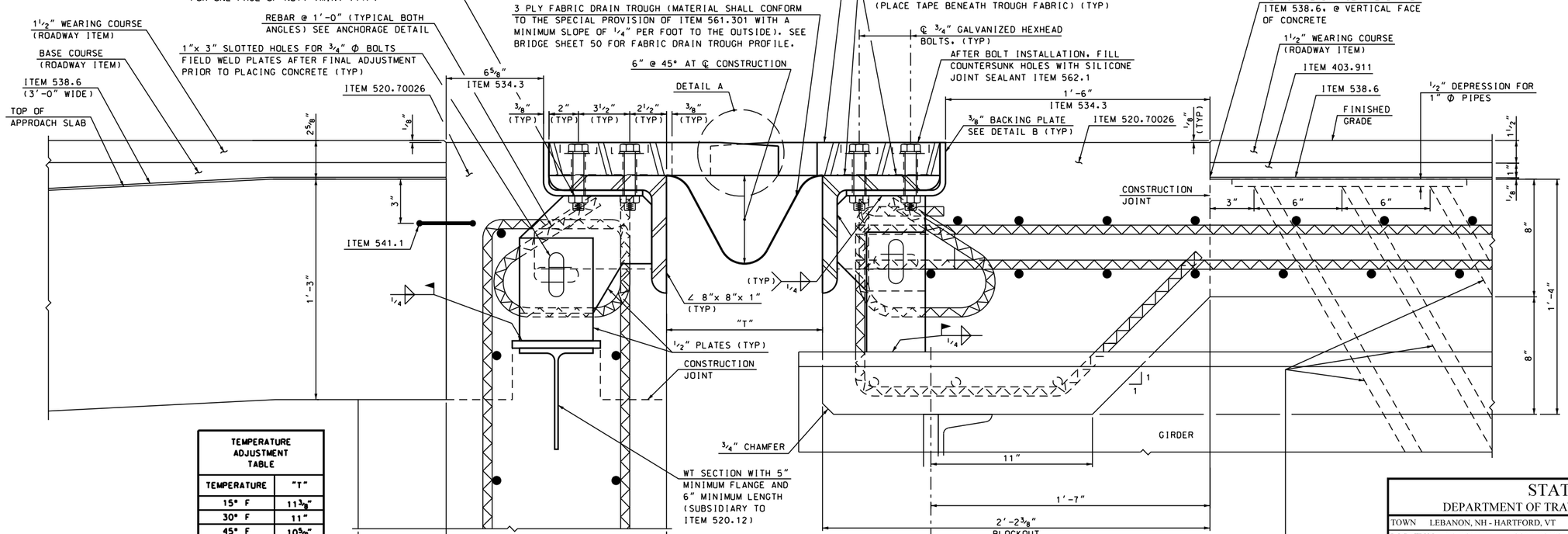

TEMPERATURE ADJUSTMENT TABLE	
TEMPERATURE	"T"
15° F	11⅜"
30° F	11"
45° F	10⅝"
60° F	10¼"
75° F	9⅞"

SECTION A-A

SCALE: 3" = 1'-0"

3 - 1" Φ PVC DRAINS EACH SIDE. SET PIPES TO DISCHARGE AWAY FROM ABUTMENT SEAT. PROVIDE BREAKS THROUGH MEMBRANE AND SEAL AROUND WITH ASPHALT. COST TO BE INCLUDED IN ITEM 520.70026. ATTACH DRAIN PIPES TO BOTTOM FLANGE OF GIRDER WITH CLIPS. EXTEND DRAINS 1" MINIMUM BELOW BOTTOM OF STRUCTURAL STEEL.

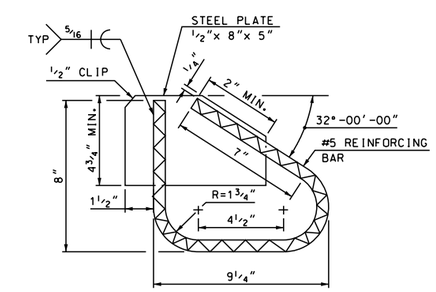

ANCHORAGE DETAIL

SCALE: 3" = 1'-0"

NOTE:
FOR SECTION B-B AND C-C SEE BRIDGE SHEET 51.

STATE OF NEW HAMPSHIRE
DEPARTMENT OF TRANSPORTATION * BUREAU OF BRIDGE DESIGN

TOWN LEBANON, NH - HARTFORD, VT | BRIDGE NO. 058\128 | STATE PROJECT 14957
LOCATION US ROUTE 4 over CONNECTICUT RIVER

FINGER PLATE EXP. JOINT (ITEM 561.301) (1 OF 3)

REVISIONS AFTER PROPOSAL	BY	DATE		BY	DATE
DESIGNED	DDT	2/11	CHECKED	RLK	2/13
DRAWN	SMG	2/11	CHECKED	RLK	2/13
QUANTITIES	JWP	2/13	CHECKED	PAB	2/13

SUBDIRECTORY	.DGN LOCATOR	SHEET SCALE
BRC/SUPER	14957FngrJt	AS NOTED

ISSUE DATE		FEDERAL PROJECT NO.	SHEET NO.	TOTAL SHEETS
REV. DATE		----------	74	157

BRIDGE SHEET 49 OF 71
FILE NUMBER 110-6-1

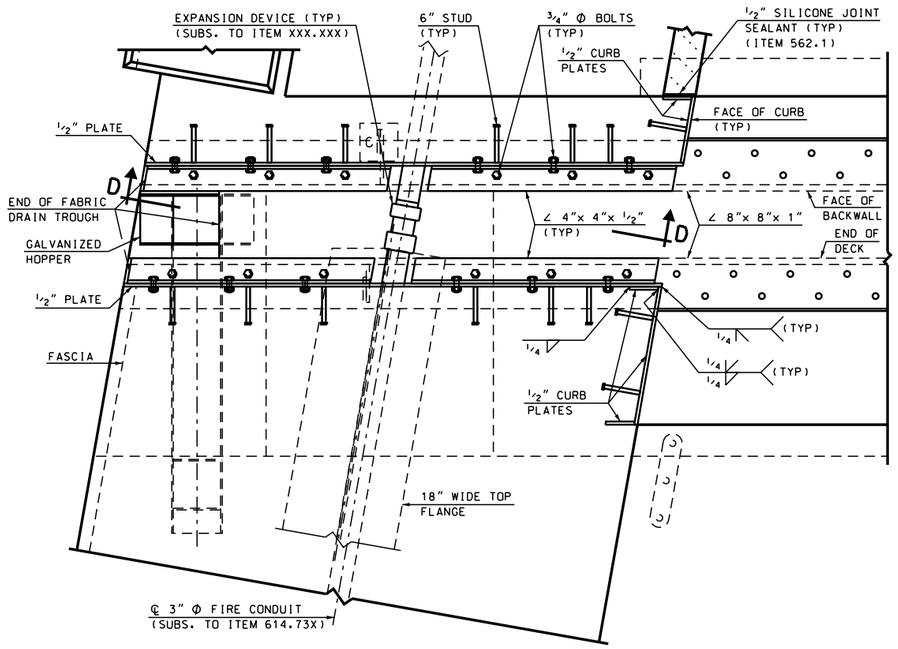

LOWER ASSEMBLY

(SIDE VERTICAL PLATES NOT SHOWN, SEE DETAIL BELOW)
SCALE: 1" = 1'-0"

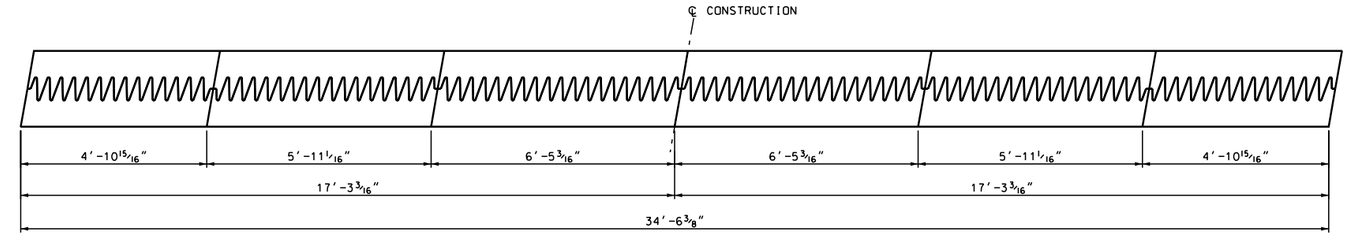

FINGER PLATE PLAN

SCALE: 1/2" = 1'-0"

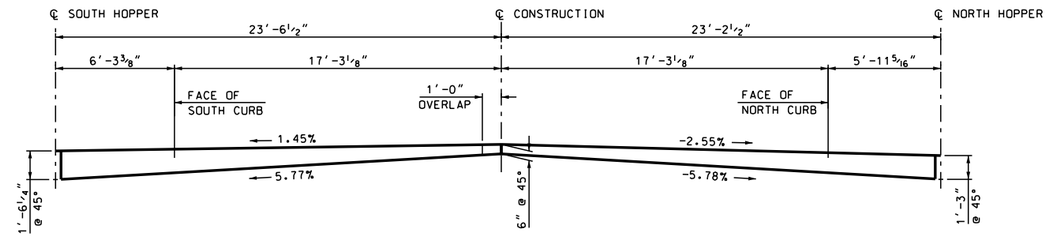

FABRIC DRAIN TROUGH PROFILE

SCALE: 1/4" = 1'-0"

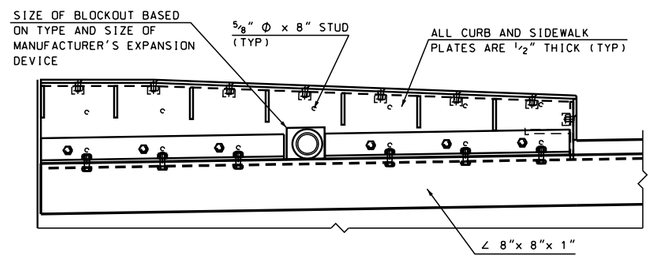

SECTION D-D

SCALE: 1" = 1'-0"

EXPANSION JOINT NOTES

1. EXPANSION JOINT STEEL SHALL BE AASHTO M270 GRADE 50 (ASTM A709, GR 50) GALVANIZED, EXCEPT AS OTHERWISE ALLOWED. THE ENTIRE ASSEMBLY SHALL BE PAID AS ITEM 561.301, PREFABRICATED EXPANSION JOINT, FINGER JOINT (F).
2. SPLICES FOR EXPANSION JOINT STEEL SHALL DEVELOP FULL STRENGTH.
3. THE EXPANSION JOINT SHALL BE PRESET TO THE TEMPERATURE ANTICIPATED AT THE TIME OF INSTALLATION. FINAL SETTING IN THE FIELD SHALL BE DETERMINED BY THE ENGINEER (SEE TEMPERATURE TABLE ON BRIDGE SHEET 49). THE MAXIMUM ALLOWABLE MOVEMENT SHALL BE 3 1/8 INCHES.
4. PROTECT TOP OF EXPANSION JOINT DURING PLACEMENT OF CONCRETE AND BITUMINOUS PAVEMENT.
5. JOINT SUPPORT PLATES SHALL BE SHOP WELDED TO THE EXPANSION JOINT STEEL AND SHALL BE VERTICAL AFTER THE JOINT ASSEMBLY HAS BEEN ADJUSTED FOR ROADWAY CROSS-SLOPE AND GRADE.
6. FASCIA AND CURB PLATES SHALL BE SHOP WELDED AND SHALL BE VERTICAL AFTER THE JOINT ASSEMBLY HAS BEEN ADJUSTED FOR ROADWAY CROSS-SLOPE AND GRADE.
7. IMMEDIATELY AFTER THE JOINT HAS BEEN SECURED TO THE STRUCTURAL STEEL AND BACKWALL, REMOVE SHIPPING DEVICES. WELDING OF SHIPPING DEVICES TO FINGER PLATE SHALL NOT BE ALLOWED.
8. THE FINGER PLATES SHALL BE CUT FROM ONE CONTINUOUS 2'-0" WIDE x 2 1/4" THICK PLATE AS SHOWN ON THE FINGER CUTTING DETAIL, AND FURNISHED IN 6 LENGTHS.
9. THE HOPPERS AND DOWNSPOUTS SHALL BE A-36 GALVANIZED IN ACCORDANCE WITH SECTION 550. PAYMENT FOR HOPPERS, BLOCKING PADS AND ALL ATTACHMENTS WILL BE SUBSIDIARY TO ITEM 561.301.
10. ELEVATIONS SHOWN AT TOP OF FINGER PLATES ARE 1/8" LOWER THAN THE PROPOSED FINISHED ROADWAY GRADE.
11. SEE BRIDGE SHEET 51 FOR HOPPER DETAILS.
12. THE FABRIC TROUGH SHALL BE PREFORMED FABRIC MATERIAL AND SHALL BE CUT DURING SHOP PRE-ASSEMBLY. THE TROUGH MAY BE SUPPLIED IN 2 LENGTHS WITH 1'-0" OVERLAP AT ℄ CONSTRUCTION.
13. TRIM EXCESS FABRIC BEHIND CURB PLATES.

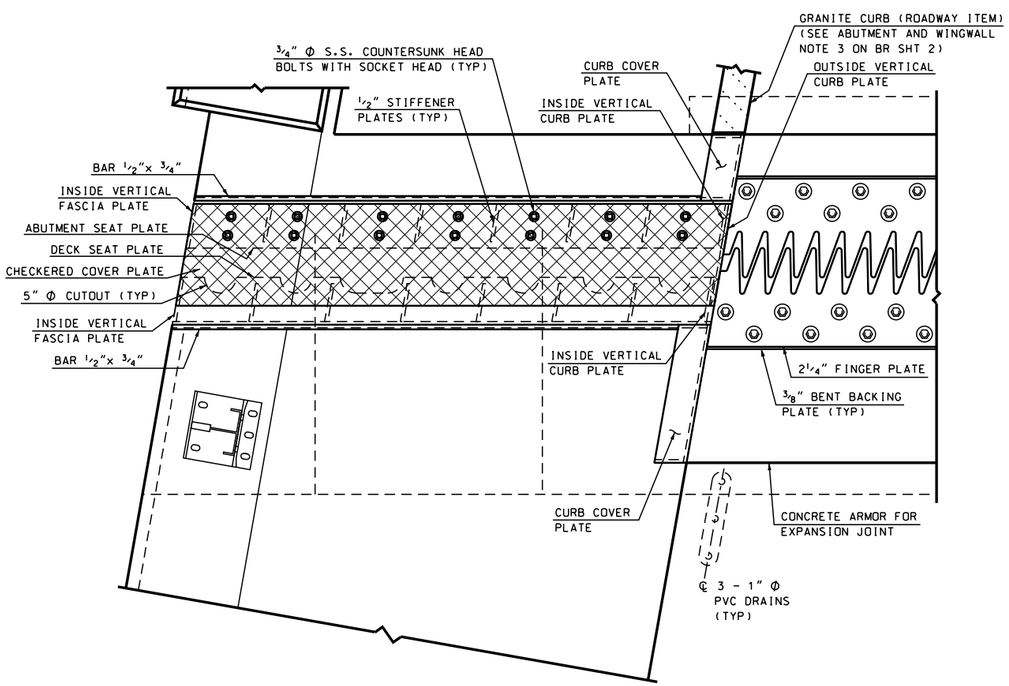

UPPER ASSEMBLY

(STUDS NOT SHOWN)
SCALE: 1" = 1'-0"

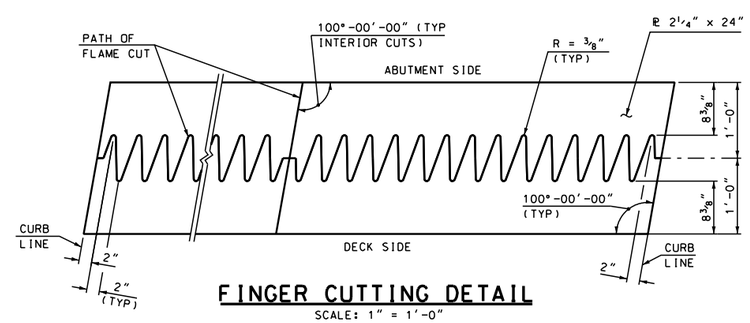

FINGER CUTTING DETAIL

SCALE: 1" = 1'-0"

SUBDIRECTORY	.DGN LOCATOR	SHEET SCALE
BRC/SUPER	14957FngrJt	AS NOTED

STATE OF NEW HAMPSHIRE
DEPARTMENT OF TRANSPORTATION * BUREAU OF BRIDGE DESIGN

TOWN LEBANON, NH - HARTFORD, VT BRIDGE NO. 058\128 STATE PROJECT 14957
LOCATION US ROUTE 4 over CONNECTICUT RIVER

FINGER PLATE EXP. JOINT (ITEM 561.301) (2 OF 3)

REVISIONS AFTER PROPOSAL		BY	DATE		BY	DATE
	DESIGNED	DDT	2/11	CHECKED	RLK	2/13
	DRAWN	SMG	2/11	CHECKED	RLK	2/13
	QUANTITIES	JWP	2/13	CHECKED	PAB	2/13
	ISSUE DATE		FEDERAL PROJECT NO.		SHEET NO.	
	REV. DATE		----------		75	

BRIDGE SHEET 50 OF 71
FILE NUMBER 110-6-1
TOTAL SHEETS 157

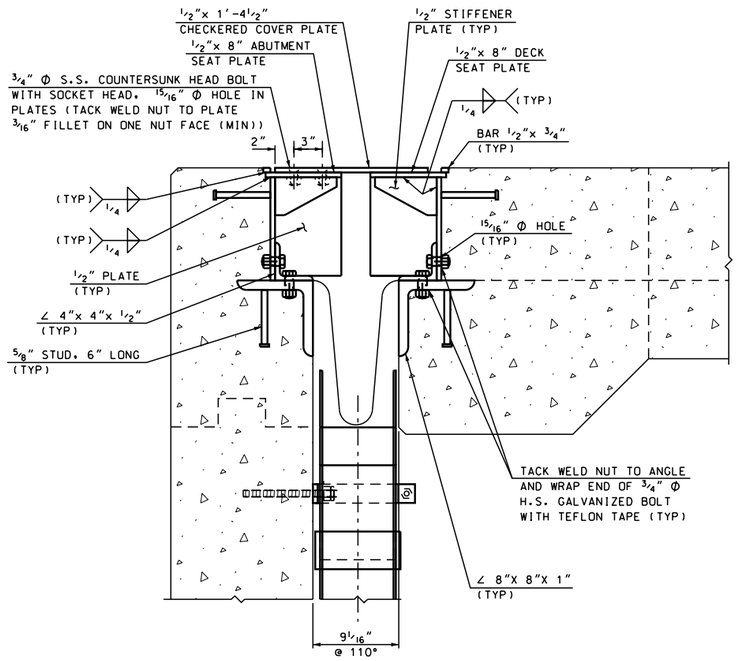

SECTION B-B

SCALE: 1 1/2" = 1'-0"
(MIN. OPENING)

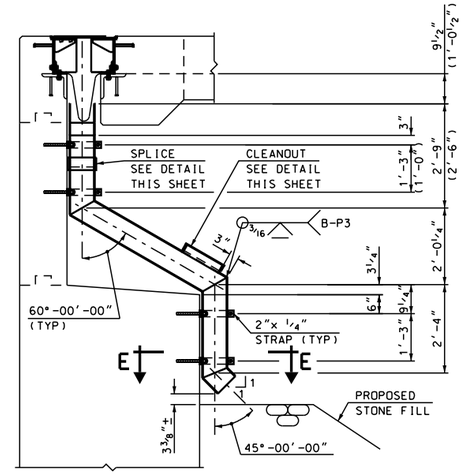

NOTE:
NORTH HOPPER DIMENSIONS SHOWN.
DIFFERENT SOUTH HOPPER DIMENSIONS SHOWN IN ( ).

SECTION THRU ℄ OF HOPPER

SCALE: 1/2" = 1'-0"

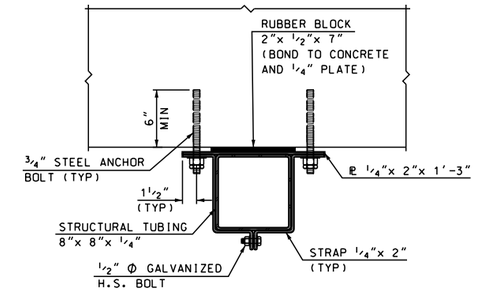

SECTION E-E

SCALE: 1 1/2" = 1'-0"

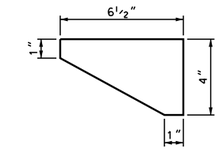

STIFFENER PLATE

SCALE: 3" = 1'-0"

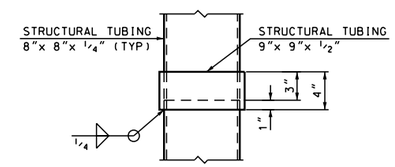

DOWNSPOUT SPLICE DETAIL

SCALE: 1 1/2" = 1'-0"

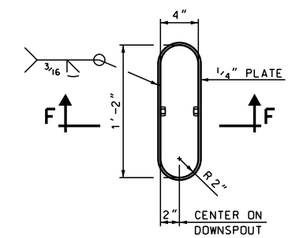

CLEANOUT DETAIL

SCALE: 1 1/2" = 1'-0"
(COVER REMOVED)

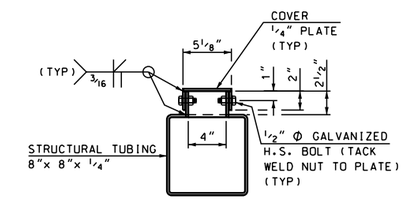

SECTION F-F

SCALE: 1 1/2" = 1'-0"

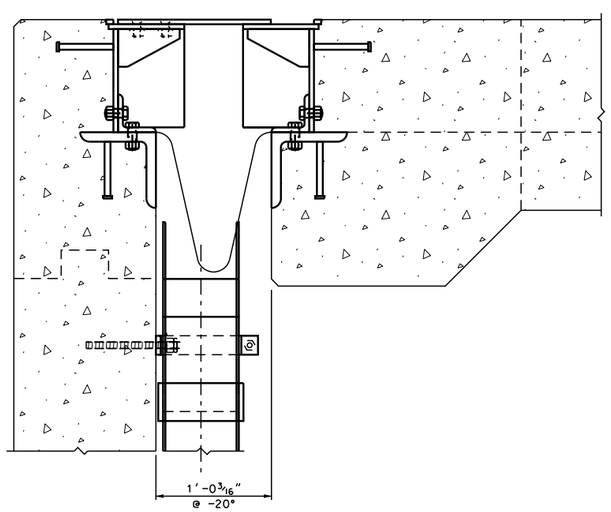

SECTION B-B

SCALE: 1 1/2" = 1'-0"
(MAX. OPENING)

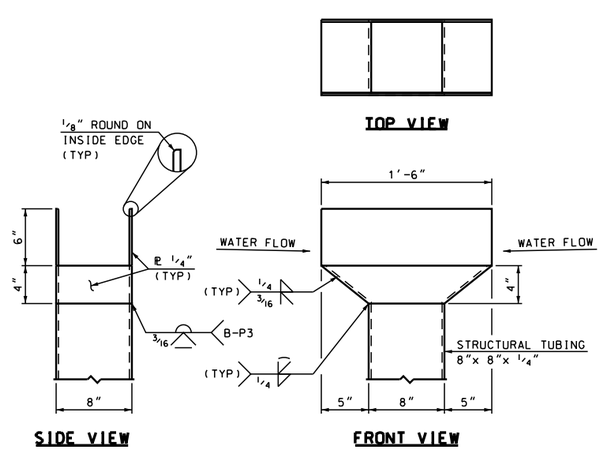

HOPPER DETAIL

SCALE: 1 1/2" = 1'-0"

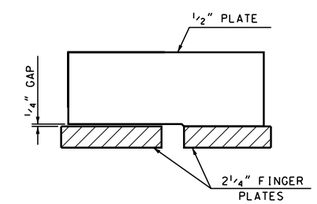

OUTSIDE VERTICAL CURB PLATE DETAIL

SCALE: 1 1/2" = 1'-0"

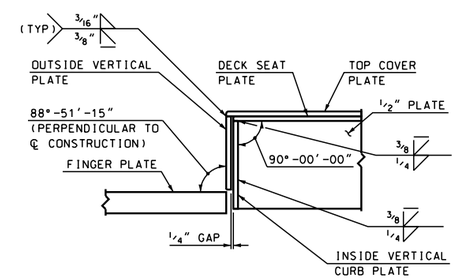

SECTION C-C

SCALE: 1 1/2" = 1'-0"

NOTE:
FOR LOCATION OF SECTION B-B AND C-C SEE BRIDGE SHEET 49.

STATE OF NEW HAMPSHIRE
DEPARTMENT OF TRANSPORTATION * BUREAU OF BRIDGE DESIGN

TOWN LEBANON, NH - HARTFORD, VT | BRIDGE NO. 058\128 | STATE PROJECT 14957

LOCATION US ROUTE 4 over CONNECTICUT RIVER

FINGER PLATE EXP. JOINT (ITEM 561.301) (3 OF 3)

REVISIONS AFTER PROPOSAL		BY	DATE		BY	DATE
	DESIGNED	DDT	2/11	CHECKED	RLK	2/13
	DRAWN	SMG	2/11	CHECKED	RLK	2/13
	QUANTITIES	JWP	2/13	CHECKED	PAB	2/13
	ISSUE DATE			FEDERAL PROJECT NO.	SHEET NO.	
	REV. DATE			----------	76	

BRIDGE SHEET 51 OF 71
FILE NUMBER 110-6-1
TOTAL SHEETS 157

SUBDIRECTORY	.DGN LOCATOR	SHEET SCALE
BRC/SUPER	14957FngrJt	AS NOTED

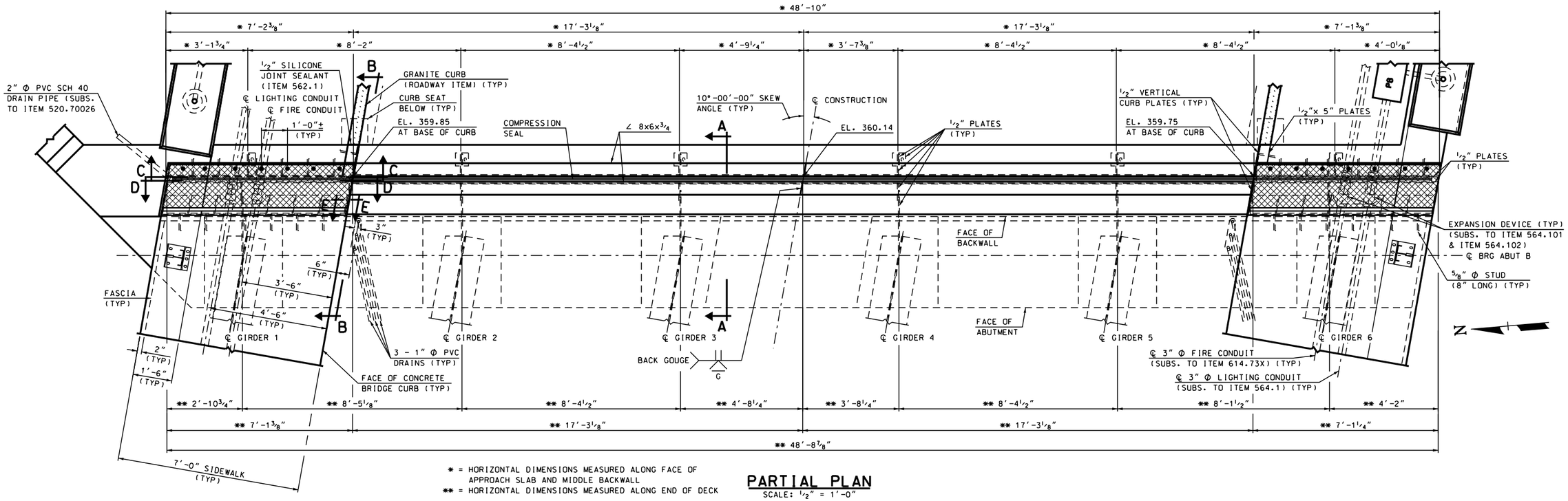

* = HORIZONTAL DIMENSIONS MEASURED ALONG FACE OF APPROACH SLAB AND MIDDLE BACKWALL
** = HORIZONTAL DIMENSIONS MEASURED ALONG END OF DECK

PARTIAL PLAN

SCALE: 1/2" = 1'-0"

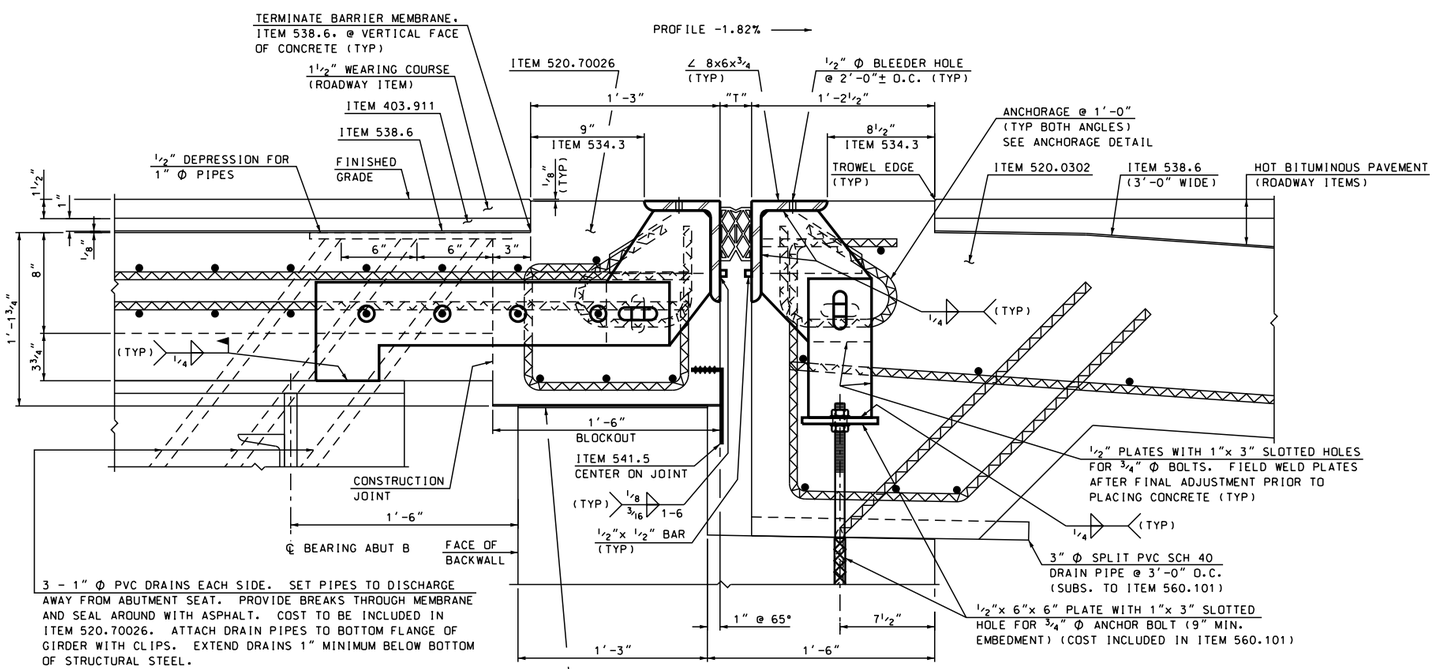

3 - 1" Φ PVC DRAINS EACH SIDE. SET PIPES TO DISCHARGE AWAY FROM ABUTMENT SEAT. PROVIDE BREAKS THROUGH MEMBRANE AND SEAL AROUND WITH ASPHALT. COST TO BE INCLUDED IN ITEM 520.70026. ATTACH DRAIN PIPES TO BOTTOM FLANGE OF GIRDER WITH CLIPS. EXTEND DRAINS 1" MINIMUM BELOW BOTTOM OF STRUCTURAL STEEL.

PLACE TWO LAYERS OF SLIDING SURFACE MATERIAL. ONE LAYER 1'-6" WIDE SHALL BE EMBEDDED INTO THE DECK FOR THE ENTIRE WIDTH OF THE DECK. THE OTHER LAYER 1'-3" WIDE SHALL BE BONDED TO THE TOP OF BACKWALL FOR THE ENTIRE LENGTH OF THE DECK AND BACKWALL CONTACT AREA. THE MINIMUM COMPRESSIVE STRENGTH OF THE SLIDING SURFACE MATERIAL SHALL BE 8000 PSI IN BEARING. SEE THE NHDOT APPROVED PRODUCTS LIST UNDER PLASTIC BEARING STRIP SECTION 520 FOR MATERIAL AND ADHESIVE. ALL COSTS INCLUDED IN ITEM 520.70026

SECTION A-A

SCALE: 2" = 1'-0"

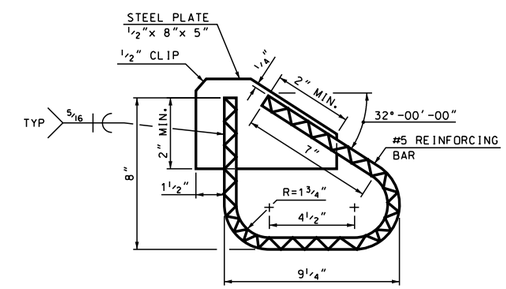

ANCHORAGE DETAIL

SCALE: 3" = 1'-0"

TEMPERATURE SETTING TABLE	
TEMPERATURE	"T"
20° F	3"
35° F	2 13/16"
50° F	2 5/8"
65° F	2 1/2"
80° F	2 5/16"
95° F	2 3/16"

TEMPERATURE ADJUSTMENT TABLE NOTES

1. "T" DIMENSIONS ARE PERPENDICULAR TO BACKWALL.
2. VALUES IN TEMPERATURE SETTING TABLE ARE GIVEN FOR ADJUSTING THE EXPANSION JOINT STEEL IMMEDIATELY PRIOR TO POURING CONCRETE.
3. MINIMUM INSTALLATION WIDTH "T" FOR SEAL IS 2 1/2" (APPROXIMATELY 65° F OR LESS).

FOR SECTIONS B-B, C-C, D-D, AND E-E SEE BRIDGE SHEET 53.

STATE OF NEW HAMPSHIRE
DEPARTMENT OF TRANSPORTATION * BUREAU OF BRIDGE DESIGN

TOWN LEBANON, NH - HARTFORD, VT BRIDGE NO. 058\128 STATE PROJECT 14957
LOCATION US ROUTE 4 over CONNECTICUT RIVER

COMPRESSION SEAL JOINT (ITEM 560.101) (1 OF 2)

REVISIONS AFTER PROPOSAL

	BY	DATE		BY	DATE
DESIGNED	DLS	2/12	CHECKED	RLK	2/13
DRAWN	SMG	2/12	CHECKED	RLK	2/13
QUANTITIES	JWP	2/13	CHECKED	PAB	2/13

ISSUE DATE
REV. DATE
FEDERAL PROJECT NO. ----------
SHEET NO. 77
TOTAL SHEETS 157
BRIDGE SHEET 52 OF 71
FILE NUMBER 110-6-1

SUBDIRECTORY	.DGN LOCATOR	SHEET SCALE
BRC\SUPER	14957CompJt	AS NOTED

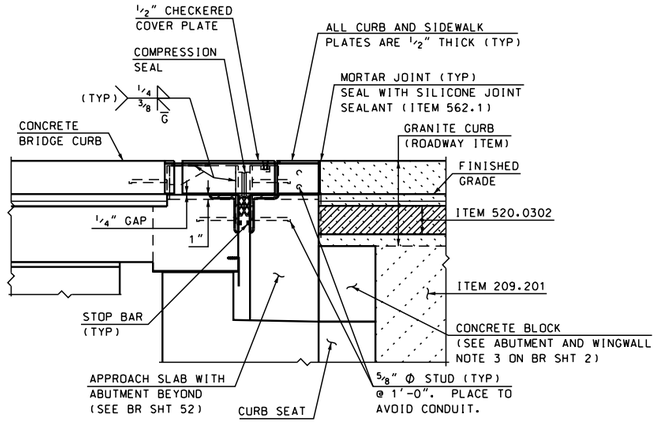

SECTION B-B

SCALE: 3/4" = 1'-0"

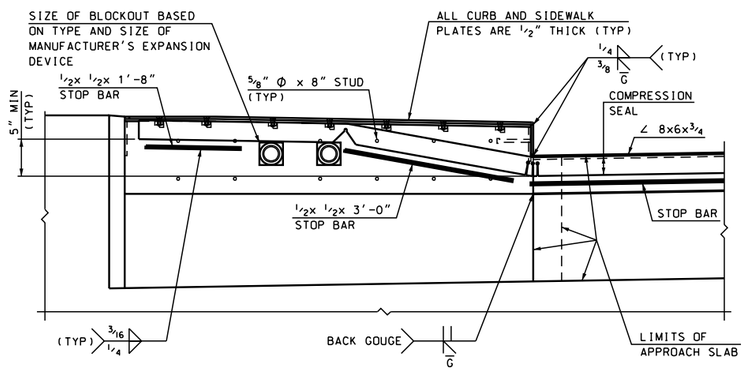

SECTION C-C

SCALE: 3/4" = 1'-0"

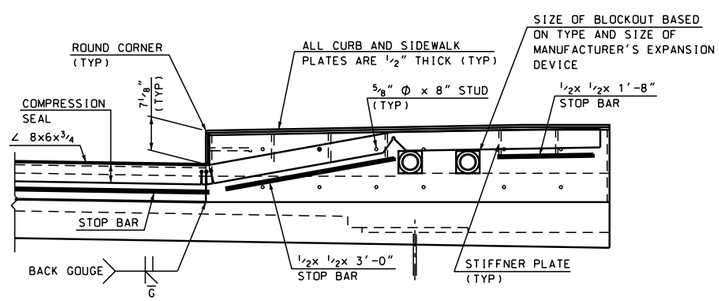

SECTION D-D

SCALE: 3/4" = 1'-0"

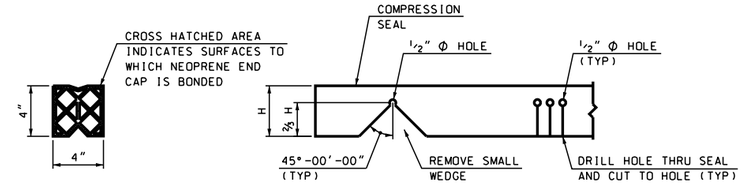

UNCOMPRESSED SEAL — DOWN-TURN CUT — UP-TURN CUT

RELIEF CUT DETAIL

N.T.S.

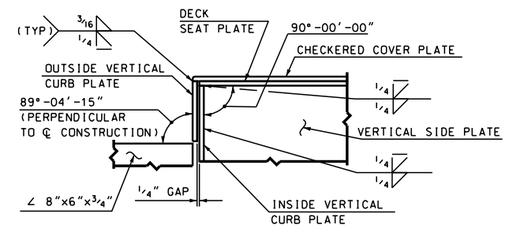

SECTION E-E

SCALE: 1 1/2" = 1'-0"

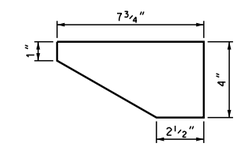

STIFFENER PLATE

SCALE: 3" = 1'-0"

EXPANSION JOINT NOTES

1. EXPANSION JOINT STEEL ANGLES SHALL BE AASHTO M223 GRADE 50 (ASTM A572 GRADE 50), GALVANIZED. MINOR STEEL PLATES AND STOP BARS SHALL BE GALVANIZED AND MAY CONFORM TO AASHTO M183 (ASTM A36). THE ENTIRE ASSEMBLY, INCLUDING COMPRESSION SEAL (WA-400 BY WATSON BOWMAN ACME OR CV-4000 BY D.S. BROWN CO.), SHALL BE PAID FOR AS ITEM 560.101, PREFABRICATED COMPRESSION SEAL EXPANSION JOINT (F).
2. SPLICES FOR EXPANSION JOINT STEEL ANGLES SHALL DEVELOP FULL STRENGTH.
3. THE EXPANSION JOINT SHALL BE PRESET TO THE TEMPERATURE ANTICIPATED AT THE TIME OF INSTALLATION. FINAL SETTING IN THE FIELD SHALL BE DETERMINED BY THE CONTRACT ADMINISTRATOR (SEE TEMPERATURE SETTING TABLE).
4. COMPRESSION SEAL SHALL BE FURNISHED IN ONE CONTINUOUS LENGTH. NO SPLICES WILL BE ALLOWED.
5. JOINT SUPPORT PLATES AND CURB PLATES SHALL BE SHOP WELDED TO THE EXPANSION JOINT STEEL AND SHALL BE VERTICAL AFTER THE JOINT ASSEMBLY HAS BEEN ADJUSTED FOR ROADWAY CROSS-SLOPE AND PROFILE GRADE.
6. CURB PLATES SHALL BE SHOP WELDED AND SHALL BE VERTICAL AFTER THE JOINT ASSEMBLY HAS BEEN ADJUSTED FOR ROADWAY CROSS-SLOPE AND PROFILE GRADE.
7. IMMEDIATELY AFTER THE JOINT HAS BEEN SECURED TO THE STRUCTURAL STEEL AND APPROACH SLAB SEAT, REMOVE SHIPPING DEVICES AND GRIND SMOOTH ANY WELDS ON EXPOSED SURFACES. REPAIR ANY DAMAGED GALVANIZED SURFACES PER SECTION 550.2.9.1.
8. PROTECT TOP OF EXPANSION JOINT DURING PLACEMENT OF CONCRETE AND BITUMINOUS PAVEMENT.
9. THE COMPRESSION SEAL HAS BEEN DESIGNED FOR A TOTAL FACTORED MOVEMENT OF 1.56".
10. ELEVATIONS SHOWN AT TOP OF ANGLES ARE 1/8" LOWER THAN PROPOSED FINISHED ROADWAY GRADE.
11. ANY MATERIAL USED TO FORM THE JOINT OPENING SHALL BE REMOVED PRIOR TO THE INSTALLATION OF THE COMPRESSION SEAL.
12. FOR LOCATIONS OF SECTIONS B-B, C-C, D-D, AND E-E SEE BRIDGE SHEET 52.
13. THE CONTRACTOR SHALL USE SEAL WA400 BY WATSON BOWMAN OR CV4000 BY D.S. BROWN.
14. 1/2"x 1/2" BAR BELOW SEAL SHALL BE INSTALLED PER MANUFACTURER'S RECOMMENDATION.

STATE OF NEW HAMPSHIRE
DEPARTMENT OF TRANSPORTATION * BUREAU OF BRIDGE DESIGN

TOWN LEBANON, NH - HARTFORD, VT | BRIDGE NO. 058\128 | STATE PROJECT 14957

LOCATION US ROUTE 4 over CONNECTICUT RIVER

COMPRESSION SEAL JOINT (ITEM 560.101) (2 OF 2)

BRIDGE SHEET 53 OF 71

REVISIONS AFTER PROPOSAL		BY	DATE		BY	DATE
	DESIGNED	DLS	2/12	CHECKED	RLK	2/13
	DRAWN	SMG	2/12	CHECKED	RLK	2/13
	QUANTITIES	JWP	2/13	CHECKED	PAB	2/13
	ISSUE DATE		FEDERAL PROJECT NO.		SHEET NO.	
	REV. DATE		----------		78	

FILE NUMBER 110-6-1

TOTAL SHEETS 157

SUBDIRECTORY	.DGN LOCATOR	SHEET SCALE
BRC\SUPER	14957CompJt	AS NOTED

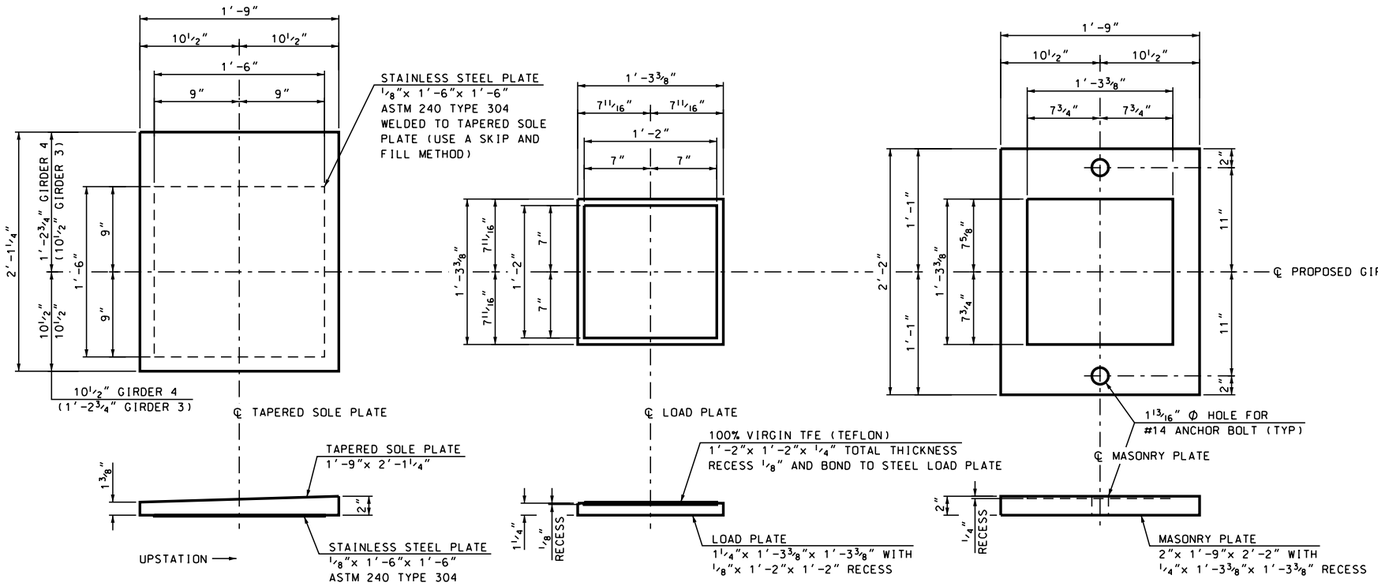

TAPERED SOLE PLATE

LOAD PLATE

MASONRY PLATE

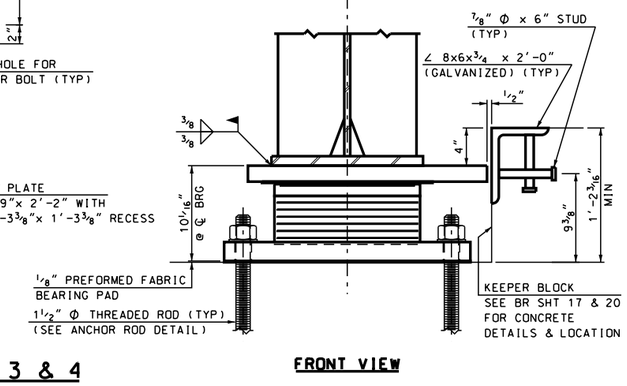

FRONT VIEW

ELASTOMERIC BEARING ASSEMBLY - ABUTMENT A - GIRDERS 3 & 4

(GIRDER 4 SHOWN. GIRDER 3 OPPOSITE HAND. 2 REQUIRED)
SCALE: 1½" = 1'-0"

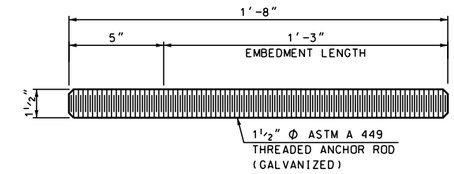

ANCHOR ROD DETAIL

ABUTMENT A (12 REQUIRED)
SCALE: 3" = 1'-0"

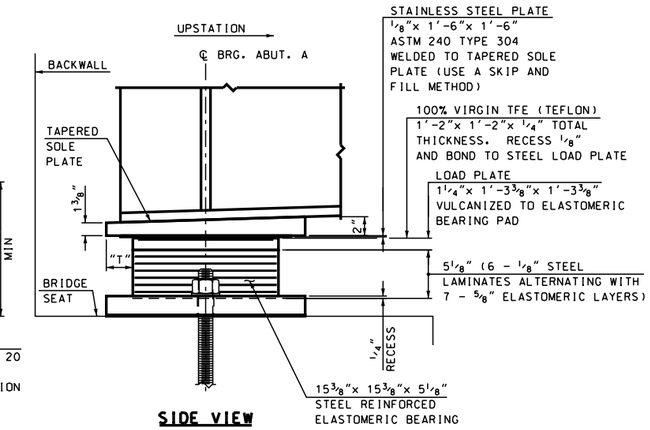

SIDE VIEW

TEMPERATURE ADJUSTMENT TABLE	
TEMPERATURE	"T"
15° F	3½"
30° F	3 3/16"
45° F	2 13/16"
60° F	2 7/16"
75° F	2 1/16"

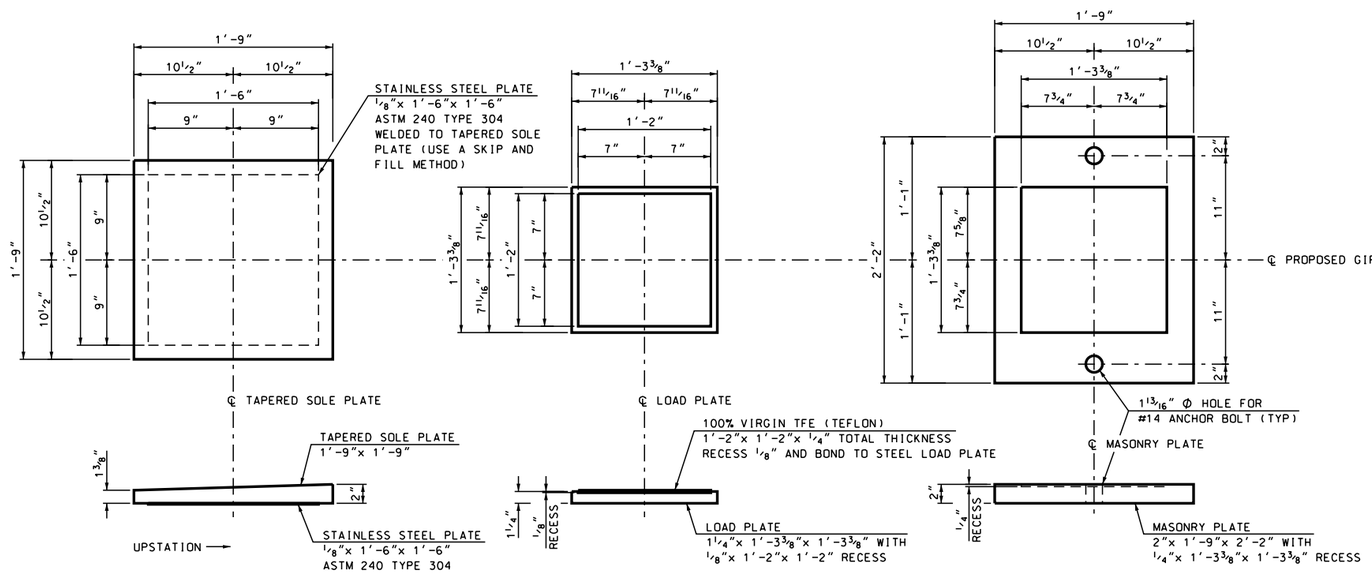

TAPERED SOLE PLATE

LOAD PLATE

MASONRY PLATE

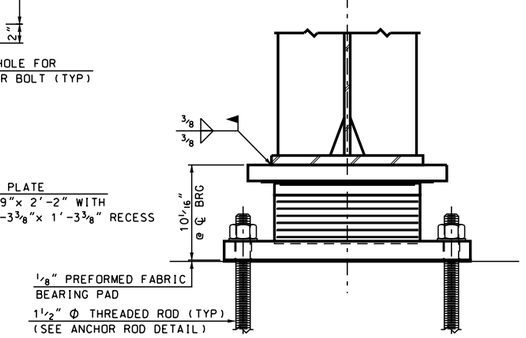

FRONT VIEW

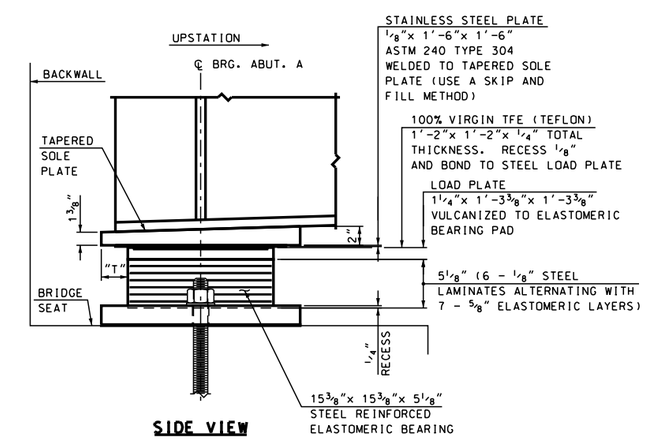

SIDE VIEW

ELASTOMERIC BEARING ASSEMBLY - ABUTMENT A - GIRDERS 1, 2, 5 & 6

(4 REQUIRED)
SCALE: 1½" = 1'-0"

NOTE:
FOR BEARING NOTES AND LOADS. SEE BRIDGE SHEET 57.

STATE OF NEW HAMPSHIRE
DEPARTMENT OF TRANSPORTATION * BUREAU OF BRIDGE DESIGN

TOWN LEBANON, NH - HARTFORD, VT BRIDGE NO. 058\128 STATE PROJECT 14957
LOCATION US ROUTE 4 over CONNECTICUT RIVER

ABUTMENT A BEARINGS

REVISIONS AFTER PROPOSAL		BY	DATE		BY	DATE
	DESIGNED	JWP	1/11	CHECKED	RLK	2/13
	DRAWN	SMG	2/11	CHECKED	RLK	2/13
	QUANTITIES	JWP	2/13	CHECKED	PAB	2/13
	ISSUE DATE		FEDERAL PROJECT NO.		SHEET NO.	
	REV. DATE		----------		79	

BRIDGE SHEET 54 OF 71
FILE NUMBER 110-6-1
TOTAL SHEETS 157

SUBDIRECTORY	.DGN LOCATOR	SHEET SCALE
BRC/SUPER	14957AbutBrgs	AS NOTED

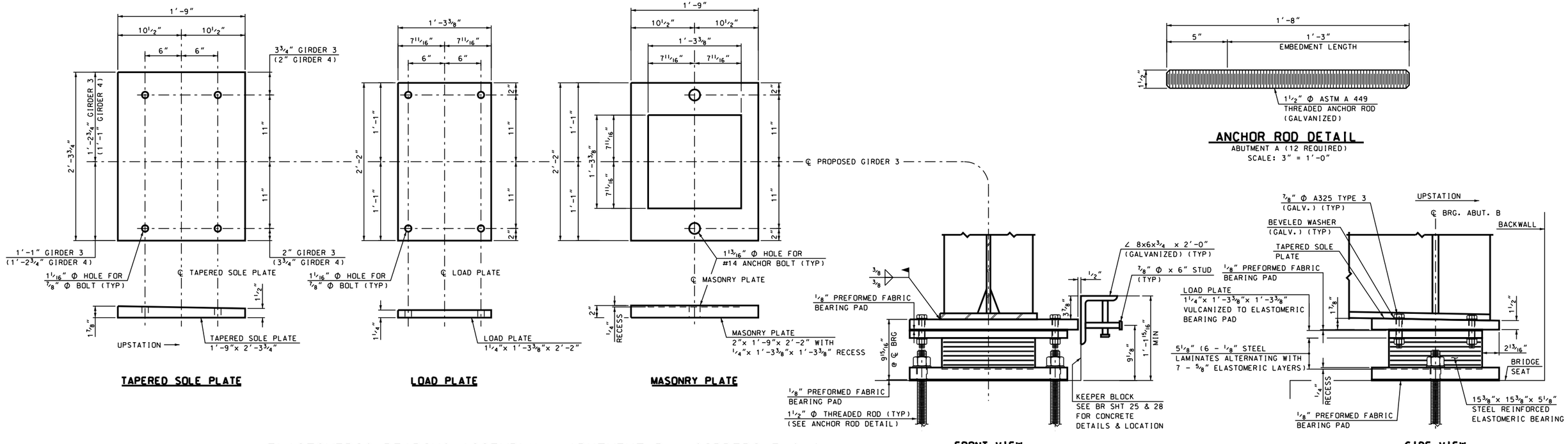

TAPERED SOLE PLATE

LOAD PLATE

MASONRY PLATE

ANCHOR ROD DETAIL
ABUTMENT A (12 REQUIRED)
SCALE: 3" = 1'-0"

FRONT VIEW

SIDE VIEW

ELASTOMERIC BEARING ASSEMBLY - ABUTMENT B - GIRDERS 3 & 4

(2 REQUIRED)
SCALE: 1½" = 1'-0"

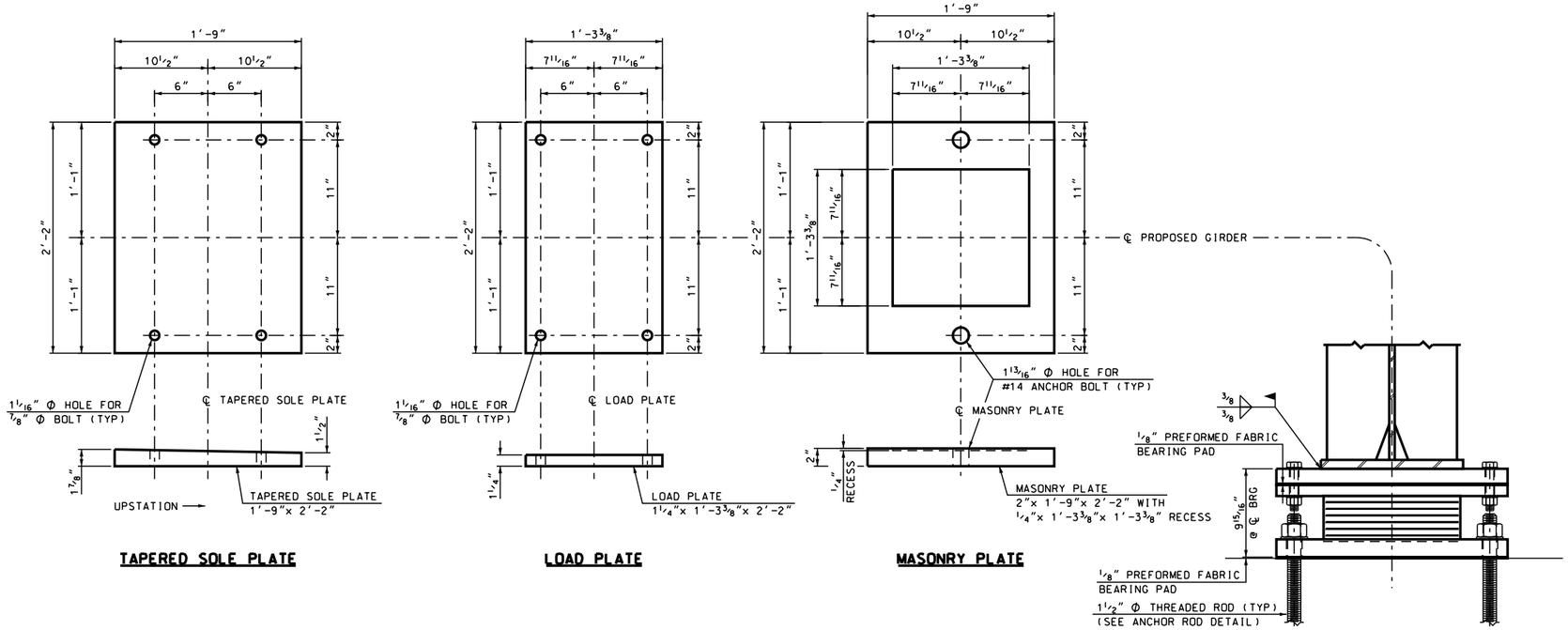

TAPERED SOLE PLATE

LOAD PLATE

MASONRY PLATE

FRONT VIEW

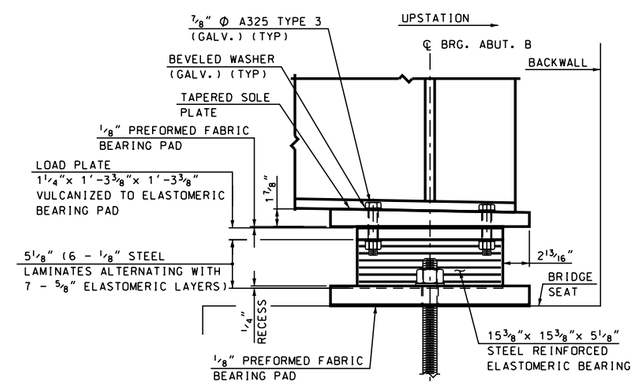

SIDE VIEW

NOTE:
FOR BEARING NOTES AND LOADS. SEE BRIDGE SHEET 57.

ELASTOMERIC BEARING ASSEMBLY - ABUTMENT B - GIRDERS 1, 2, 5 & 6

(4 REQUIRED)
SCALE: 1½" = 1'-0"

SUBDIRECTORY	.DGN LOCATOR	SHEET SCALE
BRC/SUPER	14957AbutBrgs	AS NOTED

STATE OF NEW HAMPSHIRE
DEPARTMENT OF TRANSPORTATION * BUREAU OF BRIDGE DESIGN

TOWN LEBANON, NH - HARTFORD, VT BRIDGE NO. 058\128 STATE PROJECT 14957
LOCATION US ROUTE 4 over CONNECTICUT RIVER

ABUTMENT B BEARINGS

REVISIONS AFTER PROPOSAL		BY	DATE		BY	DATE
	DESIGNED	JWP	1/11	CHECKED	RLK	2/13
	DRAWN	SMG	2/11	CHECKED	RLK	2/13
	QUANTITIES	JWP	2/13	CHECKED	PAB	2/13

ISSUE DATE	FEDERAL PROJECT NO.	SHEET NO.	TOTAL SHEETS
REV. DATE	----------	80	157

BRIDGE SHEET 55 OF 71
FILE NUMBER 110-6-1

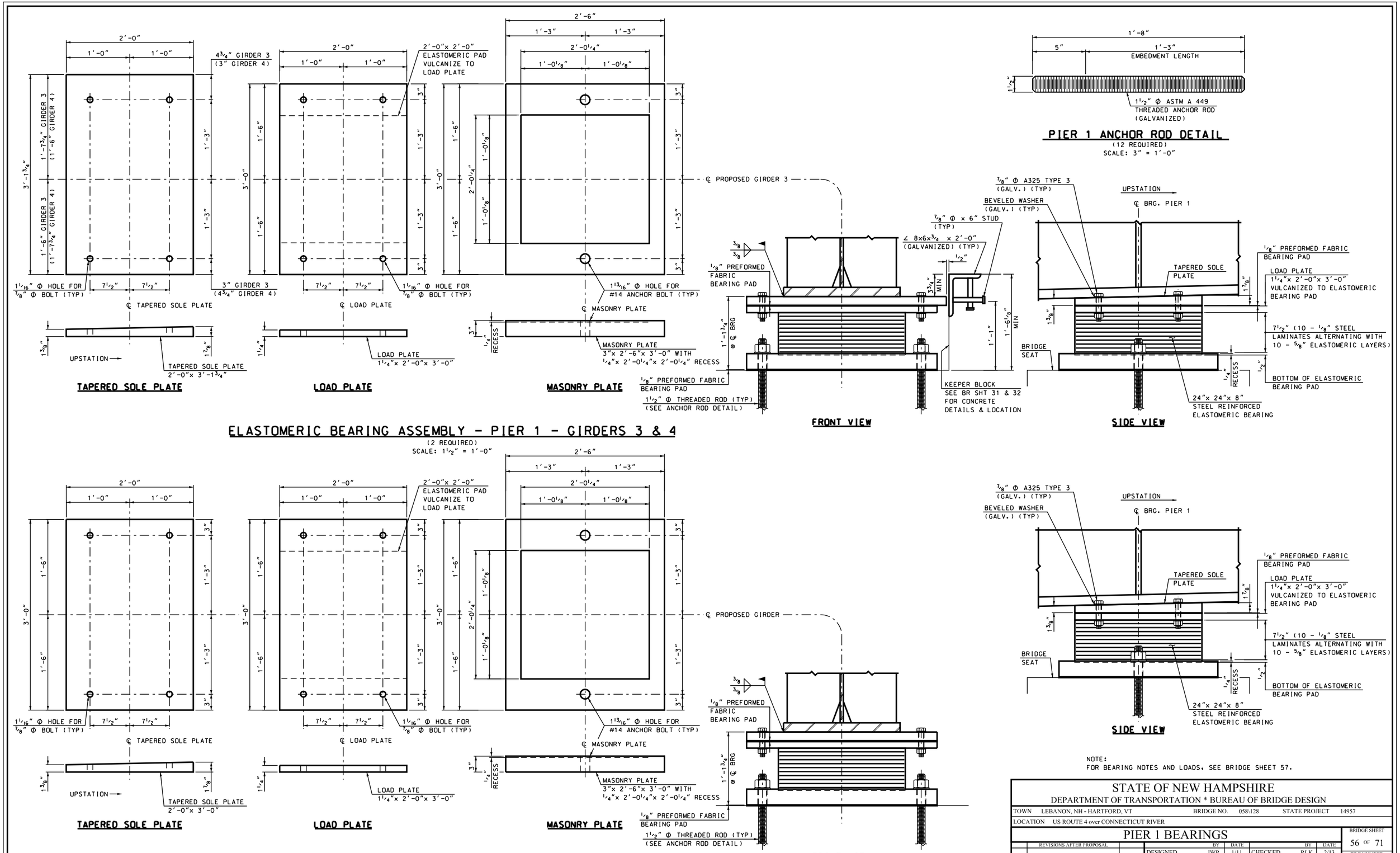

NOTE:
FOR BEARING NOTES AND LOADS, SEE BRIDGE SHEET 57.

STATE OF NEW HAMPSHIRE
DEPARTMENT OF TRANSPORTATION * BUREAU OF BRIDGE DESIGN

TOWN LEBANON, NH - HARTFORD, VT BRIDGE NO. 058\128 STATE PROJECT 14957

LOCATION US ROUTE 4 over CONNECTICUT RIVER

PIER 1 BEARINGS

REVISIONS AFTER PROPOSAL		BY	DATE		BY	DATE
	DESIGNED	JWP	1/11	CHECKED	RLK	2/13
	DRAWN	SMG	2/11	CHECKED	RLK	2/13
	QUANTITIES	JWP	2/13	CHECKED	PAB	2/13
	ISSUE DATE		FEDERAL PROJECT NO.		SHEET NO.	
	REV. DATE		----------		81	

BRIDGE SHEET 56 OF 71

FILE NUMBER 110-6-1

TOTAL SHEETS 157

SUBDIRECTORY	.DGN LOCATOR	SHEET SCALE
BRC/SUPER	14957PierBrgs	AS NOTED

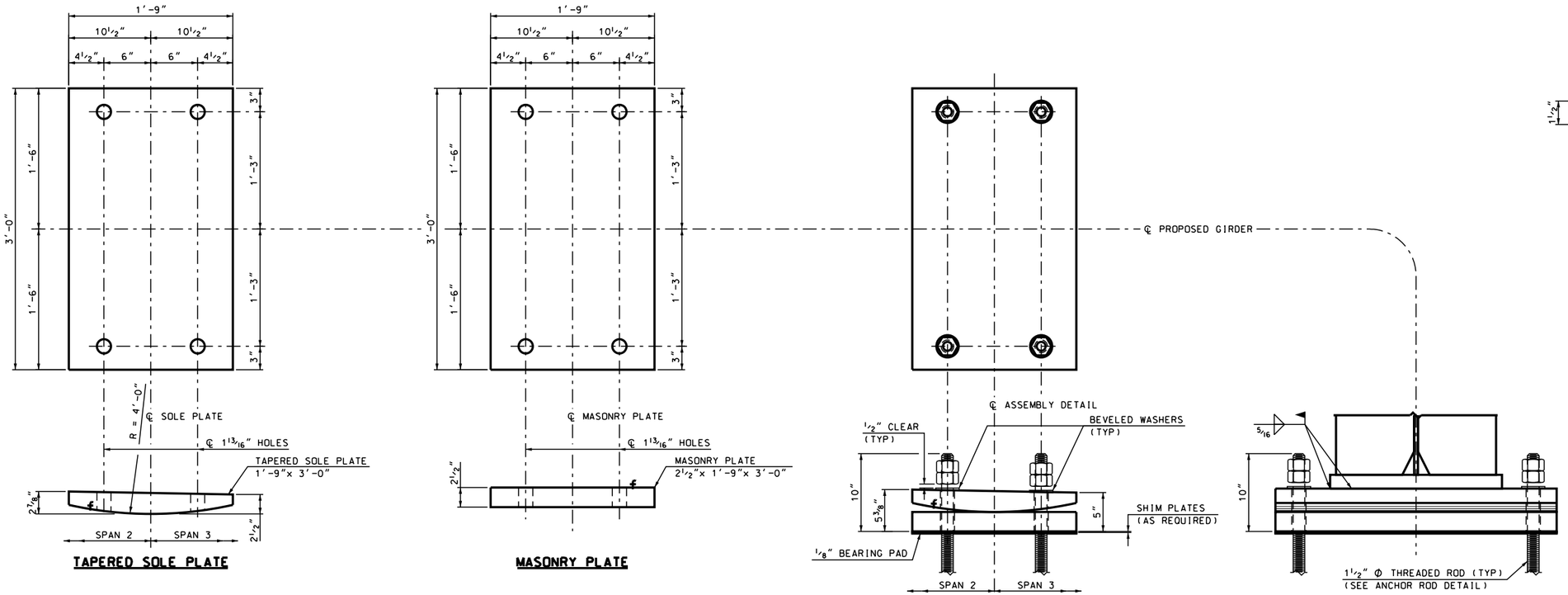

FIXED SHOE DETAILS (ITEM 550.2) - PIER 2 (6 REQUIRED)

SCALE: 1½" = 1'-0"

FIXED SHOE ASSEMBLY

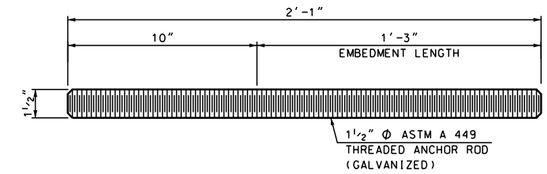

PIER 2 ANCHOR ROD DETAIL

(24 REQUIRED)
SCALE: 3" = 1'-0"

FIXED BRIDGE SHOE NOTES (PIER #2)

1. FIXED SHOE ASSEMBLIES, INCLUDING ANCHOR BOLTS, NUTS, WASHERS, AND BEARING PADS, SHALL BE PAID FOR AS ITEM 550.2, BRIDGE SHOES (F).
2. STEEL PLATES SHALL CONFORM TO AASHTO M270, GRADE 50W (ASTM A709, GRADE 50W). EXPOSED ASSEMBLED SURFACES SHALL BE PAINTED (SEE SPECIAL PROVISION).
3. ALL PLATES SHALL BE FLAT AND TRUE AFTER WELDING.
4. ANCHOR BOLTS SHALL BE GALVANIZED AND FABRICATED IN ACCORDANCE WITH SECTION 550.2.5 OF THE NHDOT STANDARD SPECIFICATIONS, 2010.
5. BEARING SURFACES MARKED "f", OR SURFACES IN CONTACT TO BE WELDED, SHALL BE FINISHED IN ACCORDANCE WITH AASHTO LRFD BRIDGE CONSTRUCTION SPECIFICATIONS, SECTION 11.4.6.

ELASTOMERIC BEARING NOTES (ABUTMENTS A, B AND PIER #1)

1. THE COST OF ABUTMENT A BEARINGS, INCLUDING ANCHOR BOLTS, NUTS, AND WASHERS, ELASTOMER, INTERNAL AND EXTERNAL STEEL PLATES, TEFLON SHEETS PREFORMED FABRIC BEARING PADS AND KEEPER BLOCK ANGLES AND SHEAR STUDS SHALL BE PAID UNDER ITEM 548.21, ELASTOMERIC BEARING ASSEMBLIES (F).
2. THE COST OF PIER 1 BEARINGS, INCLUDING ANCHOR BOLTS, NUTS, BOLTS AND WASHERS, ELASTOMER, INTERNAL AND EXTERNAL STEEL PLATES, PREFORMED FABRIC BEARING PADS AND KEEPER BLOCK ANGLES AND SHEAR STUDS SHALL BE PAID UNDER ITEM 548.22, ELASTOMERIC BEARING ASSEMBLIES (F).
3. THE COST OF ABUTMENT B BEARINGS, INCLUDING ANCHOR BOLTS, NUTS, AND WASHERS, ELASTOMER AND INTERNAL AND EXTERNAL STEEL PLATES, PREFORMED FABRIC BEARING PADS AND KEEPER BLOCK ANGLES AND SHEAR STUDS SHALL BE PAID UNDER ITEM 548.23, ELASTOMERIC BEARING ASSEMBLIES (F).
4. ELASTOMERIC BEARING PADS SHALL BE VIRGIN NATURAL RUBBER, HARDNESS (SHORE "A" DUROMETER) OF 60, GRADE 3.
5. ALL EXTERNAL PLATES SHALL CONFORM TO AASHTO M 270 GRADE 50 (ASTM A709 GRADE 50) AND SHALL BE PAINTED. THE STEEL LAMINATE PLATES SHALL CONFORM TO AASHTO M 270 GRADE 36 (ASTM A709 GRADE 36).
6. THE SURFACE FINISH OF ALL PLATES SHALL BE IN ACCORDANCE WITH AASHTO LRFD BRIDGE CONSTRUCTION SPECIFICATIONS, SECTION 11.4.6.
7. THE PTFE (TEFLON), UNFILLED, SHALL CONFORM TO SECTION 550.2.10. THE SERVICE LIMIT DESIGN COEFFICIENT OF FRICTION OF THE PTFE SLIDING SURFACE SHALL BE TAKEN AS SPECIFIED IN AASHTO SECTION 14.7.2.5.
8. THE STAINLESS STEEL SURFACE IN CONTACT WITH THE PTFE (TEFLON) SHALL HAVE A SURFACE FINISH OF 8 MICRO-INCHES RMS OR BETTER.
9. TOP LOAD PLATES SHALL BE VULCANIZED TO THE ELASTOMER PRIOR TO PAINTING. ALL SURFACES THAT ARE TO BE BONDED TO THE ELASTOMER SHALL BE BLAST CLEANED AS SPECIFIED IN SSPC-SP 10 PRIOR TO VULCANIZING.
10. PREFORMED FABRIC BEARING PADS SHALL CONFORM TO SECTION 550.2.6.
11. GALVANIZING OF KEEPER BLOCK ANGLES SHALL CONFORM TO SECTION 550.2.9.
12. THE MANUFACTURER SHALL CLEARLY MARK THE FRONT OF THE BEARING ASSEMBLY TO ASSIST WITH PROPER ORIENTATION IN THE FIELD.
13. FOLLOWING THE MANUFACTURE OF ELASTOMERIC BEARINGS AND VERIFICATION OF THE INTERNAL STEEL LAMINATES, THE PIN GROOVE OPENINGS SHALL BE COATED WITH AN APPROVED ASPHALTIC SEALER AND THE SPACE FILLED WITH SILICONE CAULKING.
14. ANCHOR BOLTS SHALL BE GALVANIZED AND FABRICATED IN ACCORDANCE WITH SECTION 550.2.5 OF THE NHDOT STANDARD SPECIFICATIONS, 2010, AS AMENDED.
15. BEARINGS SHOULD BE INSTALLED AT TEMPERATURES BETWEEN 20°F AND 70°F. INSTALLATION TEMPERATURES OUTSIDE THIS RANGE WILL REQUIRE ADJUSTMENT.
16. THE TEMPERATURE OF THE STEEL LOAD PLATE ADJACENT TO THE ELASTOMER SHALL NOT EXCEED 200°F DURING WELDING OF THE SOLE PLATE TO GIRDER. TEMPERATURE SHALL BE CONTROLLED BY WELDING PROCEDURES AND TEMPERATURE INDICATING CRAYON, OR OTHER DEVICES APPROVED BY THE ENGINEER. ALL PLATES SHALL BE FLAT AND TRUE AFTER WELDING.
17. ELASTOMERIC BEARING DESIGN LOADS (SERVICE I LOADS - DESIGN METHOD A):

ABUT. A	MAXIMUM NON-COMPOSITE DEAD LOAD	50 KIPS
	MAXIMUM SUPERIMPOSED DEAD LOAD	26 KIPS
	MAXIMUM LIVE LOAD	109 KIPS
	ROTATION	0.008 RADIANS
DESIGN MOVEMENT		
	COMPRESSIVE DEFLECTION	0.100"
	TOTAL MOVEMENT (ΔT = 90°F)	2.18"
	DESIGN MOVEMENT (SHEAR DEFORM)	1.76"
PIER #1	MAXIMUM NON-COMPOSITE DEAD LOAD	209 KIPS
	MAXIMUM SUPERIMPOSED DEAD LOAD	101 KIPS
	MAXIMUM LIVE LOAD	260 KIPS
	ROTATION	0.008 RADIANS
DESIGN MOVEMENT		
	COMPRESSIVE DEFLECTION	0.074"
	TOTAL MOVEMENT (ΔT = 90°F)	1.25"
	DESIGN MOVEMENT (SHEAR DEFORM)	1.25"
ABUT. B	MAXIMUM NON-COMPOSITE DEAD LOAD	50 KIPS
	MAXIMUM SUPERIMPOSED DEAD LOAD	26 KIPS
	MAXIMUM LIVE LOAD	106 KIPS
	ROTATION	0.007 RADIANS
DESIGN MOVEMENT		
	COMPRESSIVE DEFLECTION	0.099"
	TOTAL MOVEMENT (ΔT = 90°F)	0.93"
	DESIGN MOVEMENT (SHEAR DEFORM)	0.93"

STATE OF NEW HAMPSHIRE
DEPARTMENT OF TRANSPORTATION * BUREAU OF BRIDGE DESIGN

TOWN LEBANON, NH - HARTFORD, VT BRIDGE NO. 058\128 STATE PROJECT 14957
LOCATION US ROUTE 4 over CONNECTICUT RIVER

PIER 2 BEARINGS

REVISIONS AFTER PROPOSAL	BY	DATE		BY	DATE
DESIGNED	JWP	1/11	CHECKED	RLK	2/13
DRAWN	SMG/JWP	2/11	CHECKED	RLK	2/13
QUANTITIES	JWP	2/13	CHECKED	PAB	2/13

BRIDGE SHEET 57 OF 71
FILE NUMBER 110-6-1

SUBDIRECTORY	.DGN LOCATOR	SHEET SCALE	ISSUE DATE	FEDERAL PROJECT NO.	SHEET NO.	TOTAL SHEETS
BRC/SUPER	14957PierBrgs	AS NOTED	REV. DATE	----------	82	157

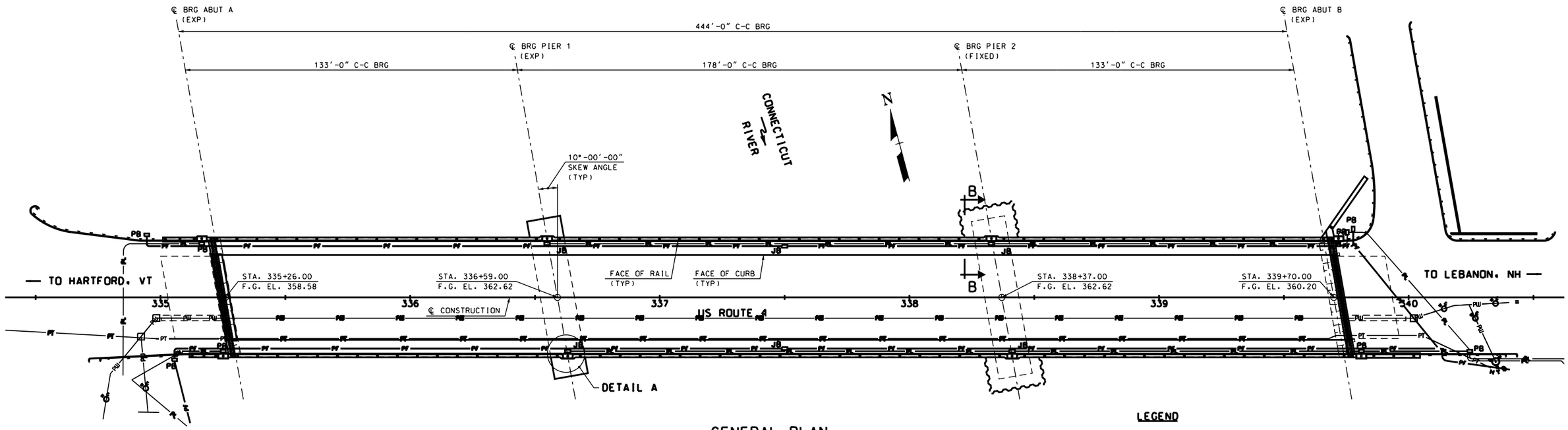

GENERAL PLAN

SCALE: 1" = 20'-0"

PULL BOX AND JUNCTION BOX STATION AND OFFSETS:

STA 334+94.5.	LT. 25.0'	
STA 334+98.5.	LT. 25.0'	
STA 335+05.6.	RT. 25.0'	
STA 335+09.6.	RT. 25.0'	
STA 335+15.5.	LT. 21.5'	
STA 336+54.8.	LT. 21.5'	
STA 337.50.0.	LT. 20.5'	
STA 337+50.0.	RT. 20.5'	
STA 338+32.8.	LT. 21.5'	
STA 339+75.4.	LT. 24.0'	
STA 339+77.7.	LT. 25.0'	
STA 339+81.0.	RT. 21.5'	
STA 335+09.6.	RT. 25.0'	
STA 335+25.1.	RT. 21.5'	
STA 336+63.1.	RT. 21.5'	
STA 338+41.1.	RT. 21.5'	
STA 340+08.0.	RT. 24.9'	
STA 340+11.5.	RT. 25.0'	

LEGEND

JB ▭ = JUNCTION BOX 10" x 2'-0" (4 REQUIRED. SUBS. TO ITEM 564.1. 2 REQUIRED. SUBS. TO ITEM XXX.XXX)

PB ▭ = MOLDED PULL BOX 13" x 24" (12 REQUIRED) (ITEM 614.522)

—PF— = PROPOSED FIRE ALARM SYSTEM CONDUIT

—PL— = PROPOSED LIGHTING SYSTEM CONDUIT

—PT— = PROPOSED TELEPHONE CONDUIT

—PW— = PROPOSED WATERLINE PIPE

BRIDGE LIGHTING AND FIRE ALARM SYSTEM NOTES

1. A #10 PULL WIRE SHALL BE LEFT IN ALL THE LIGHTING AND FIRE ALARM SYSTEM CONDUIT UNITS. CONDUIT SHALL BE RODDED AND CLEANED WITH A CLOSE FITTING MANDREL. AND WIRE BRUSHED BEFORE INSERTING THE PULLWIRE. CONDUIT ENDS SHALL BE FITTED WITH THREADED CAPS.
2. ITEM 564.1 BRIDGE LIGHTING SYSTEM. SHALL INCLUDE FURNISHING AND INSTALLING 1", 2" AND 3" Φ PVC CONDUIT. PULL WIRES. JUNCTION BOXES. EXPANSION DEVICES AND MISCELLANEOUS FITTINGS. PAY LIMITS OF ITEM 564.1. BRIDGE LIGHTING SYSTEM. SHALL BE FROM THE LIGHTS AT PIER 1 THROUGH THE BRIDGE DECK TO THE BACK OF BACKWALL AT ABUTMENT B. ALL ADDITIONAL LIGHTING COMPONENTS REQUIRED TO COMPLETE WORK TO THE LIMITS SHOWN BEYOND THE BACK OF BACKEWALLS AT ABUTMENTS A AND B SHALL BE PAID AS INDIVIDUAL ROADWAY ITEMS BUT SHALL BE SIMILARLY DETAILED AS SHOWN.
3. ITEM 564.51 FIRE ALARM SYSTEM. SHALL INCLUDE FURNISHING AND INSTALLING 3" Φ PVC CONDUIT. PULL WIRES. JUNCTION BOXES. EXPANSION DEVICES AND MISCELLANEOUS FITTINGS. PAY LIMITS OF THE FIRE ALARM CONDUIT FOR ITEM 564.51 SHALL BE FROM BACK OF BACKWALL AT ABUTMENT A TO BACK OF BACKWALL AT ABUTMENT B. ALL ADDITIONAL FIRE ALARM COMPONENTS REQUIRED TO COMPLETE THE WORK TO THE LIMITS SHOWN ON THE PLANS SHALL BE PAID AS INDIVIDUAL ROADWAY ITEMS.
4. ALL STEEL COMPONENTS AND FITTINGS SHALL BE GALVANIZED.
5. APPROVED CONDUIT EXPANSION FITTINGS SHALL BE PROVIDED AT ABUTMENT A AND B FOR BOTH THE LIGHTING AND FIRE ALARM SYSTEMS. THE EXPANSION DEVICES SHALL BE PROPERLY SUPPORTED. THE TOTAL RANGE OF MOVEMENT AT THE EXPANSION JOINT AT ABUTMENT A IS 3 1/8" AND THE TOTALED FACTORED MOVEMENT AT THE EXPANSION JOINT AT ABUTMENT B IS 1.56".
6. CONDUIT THAT ENTERS A JUNCTION BOX OR PULL BOX FROM THE BOTTOM SHALL EXTEND A MINIMUM ABOVE THE BOTTOM SURFACE. TO PROVIDE ADEQUATE DRAINAGE.
7. ALL REINFORCEMENT SHALL BE 2 1/2" CLEAR FROM ALL CONCRETE SURFACES UNLESS NOTED OTHERWISE.

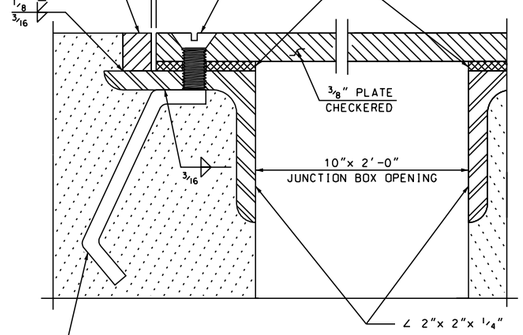

NOTE:
FRAME AND COVER SHALL BE A36M STEEL GALVANIZED AFTER FABRICATION

JUNCTION BOX COVER DETAIL

N.T.S.

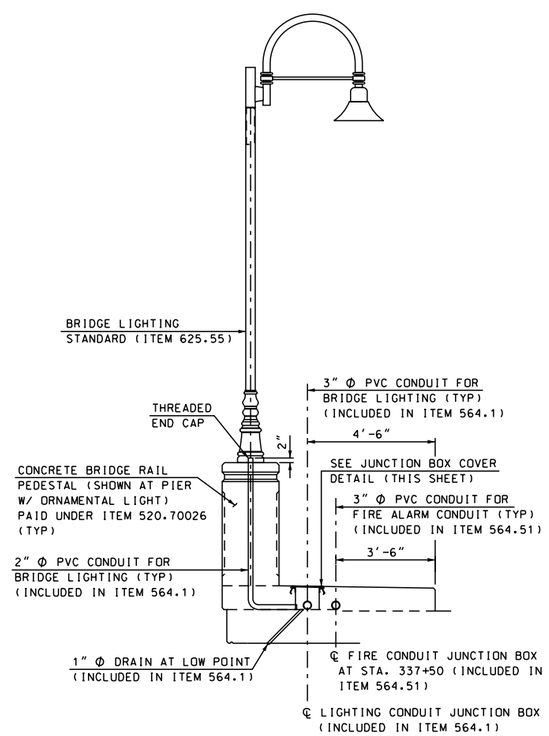

SECTION B-B

SCALE: 3/8" = 1'-0"

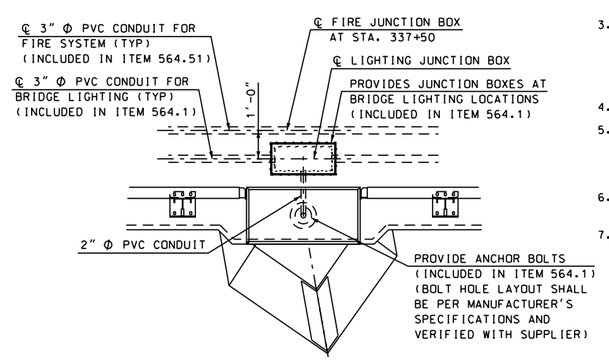

DETAIL A

SCALE: 3/8" = 1'-0"

STATE OF NEW HAMPSHIRE
DEPARTMENT OF TRANSPORTATION * BUREAU OF BRIDGE DESIGN

TOWN LEBANON, NH - HARTFORD, VT | BRIDGE NO. 058\128 | STATE PROJECT 14957

LOCATION US ROUTE 4 over CONNECTICUT RIVER

BRIDGE LIGHTING & FIRE CONDUIT DETAILS

BRIDGE SHEET 58 OF 71

REVISIONS AFTER PROPOSAL		BY	DATE		BY	DATE
	DESIGNED	JWP	6/12	CHECKED	RLK	2/13
	DRAWN	GMC	6/12	CHECKED	RLK	2/13
	QUANTITIES	JWP	2/13	CHECKED	PAB	2/13

FILE NUMBER 110-6-1

SUBDIRECTORY	.DGN LOCATOR	SHEET SCALE	ISSUE DATE	FEDERAL PROJECT NO.	SHEET NO.	TOTAL SHEETS
BRD/SUPER	14957Lighting	AS NOTED	REV. DATE	----------	83	157

APPROACH RAIL BEND DETAIL

SCALE: ½" = 1'-0"

RAIL LAYOUT NOTES

A. ITEM 563.739, BRIDGE RAIL F (3-BAR) (ANODIZED) WITH BALUSTERS
SEE BRIDGE SHEETS 60 & 61 FOR DETAILS
A1 = 15'-0"
A2 = 134'-4¼"
A3 = 174'-0"
A4 = 135'-0 3/16"
A5 = 13'-0"
A6 = 134'-0⅛"
A7 = 174'-0"
A8 = 135'-10½"
A9 = 21'-6"
ITEM TOTAL = 937 LF

B. ITEM 565.739, BRIDGE APPROACH RAIL F (3-BAR) (ANODIZED)
SEE BRIDGE SHEET 63 FOR DETAILS
ITEM TOTAL = 2 UNITS

C. ITEM 565.7391, BRIDGE APPROACH RAIL F
(3-BAR FULL HEIGHT) (ANODIZED) WITH BALUSTERS
SEE BRIDGE SHEETS 61 & 62 FOR DETAILS
C1 = 38'-3"
C2 = 104'-9"
ITEM TOTAL = 143 LF

D. ITEM 565.7391, BRIDGE APPROACH RAIL F
(3-BAR FULL HEIGHT) (ANODIZED)
SEE BRIDGE SHEETS 61 & 62 FOR DETAILS
D1 = 60'-3"
D2 = 53'-6"
D3 = 28'-6"
ITEM TOTAL = 143 LF

E. BEAM GUARDRAIL OR BEAM GUARDRAIL END UNIT
ROADWAY ITEMS

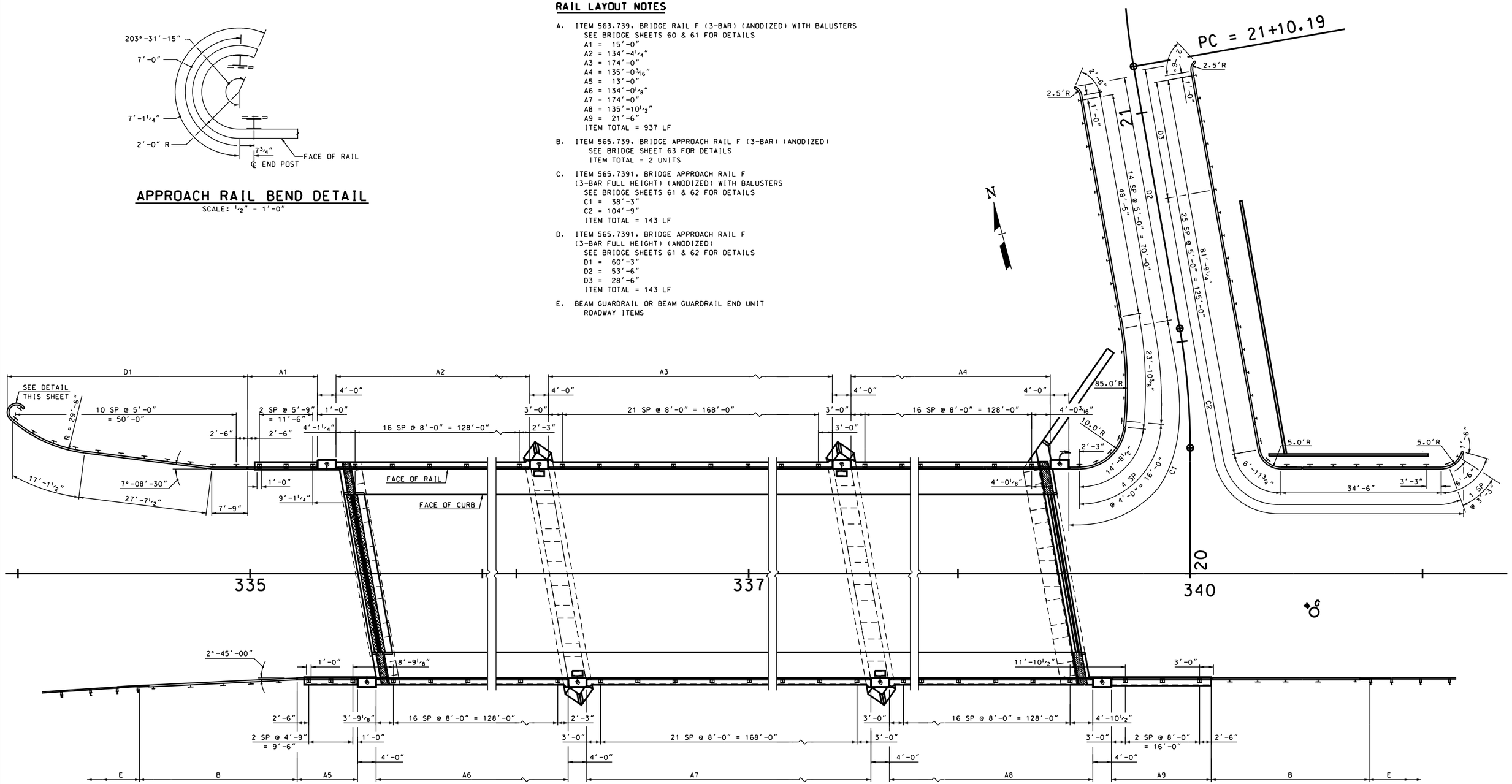

RAIL LAYOUT PLAN

SCALE: 1" = 10'-0"

STATE OF NEW HAMPSHIRE
DEPARTMENT OF TRANSPORTATION * BUREAU OF BRIDGE DESIGN

TOWN LEBANON, NH - HARTFORD, VT | BRIDGE NO. 058\128 | STATE PROJECT 14957
LOCATION US ROUTE 4 over CONNECTICUT RIVER

RAIL LAYOUT

REVISIONS AFTER PROPOSAL		BY	DATE		BY	DATE
	DESIGNED	SMG	6/12	CHECKED	RLK	2/13
	DRAWN	SMG/GMC	6/12	CHECKED	RLK	2/13
	QUANTITIES	JWP	2/13	CHECKED	PAB	2/13

SUBDIRECTORY	.DGN LOCATOR	SHEET SCALE	ISSUE DATE		FEDERAL PROJECT NO.	SHEET NO.	TOTAL SHEETS
BRC\BRSITE	14957RCLayout	AS NOTED	REV. DATE		----------	84	157

BRIDGE SHEET 59 OF 71
FILE NUMBER 110-6-1

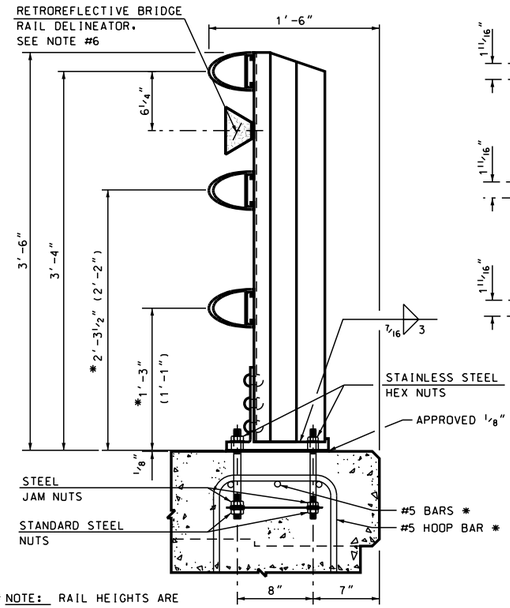

* NOTE: RAIL HEIGHTS ARE GIVEN FOR USE WITH A SIDEWALK. WITH A BRUSH CURB, USE ( ).

SECTION VIEW

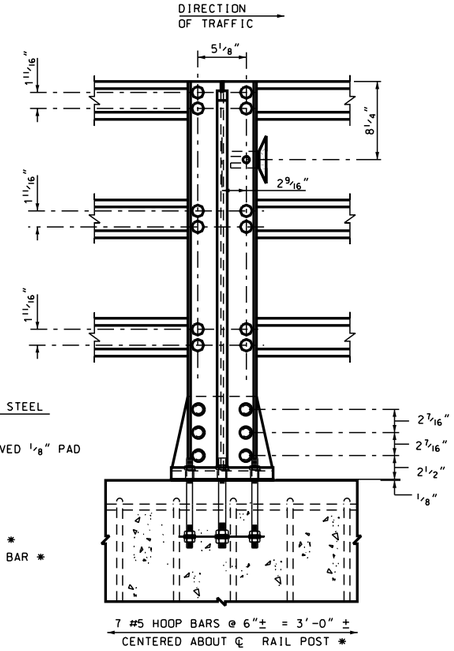

* REINFORCING CAPACITY SHALL MEET OR EXCEED THAT SHOWN

BACK ELEVATION VIEW

POST ASSEMBLY

SCALE: 1 1/2" = 1'-0"

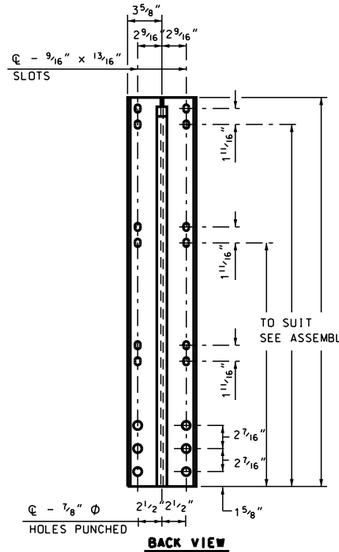

BACK VIEW

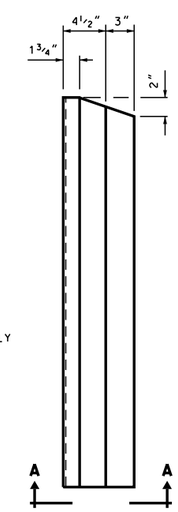

SIDE VIEW

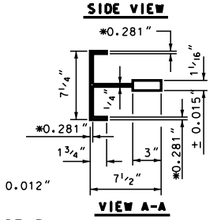

* ± 0.012"

VIEW A-A

POST ASSEMBLY

SCALE: 1 1/2" = 1'-0"

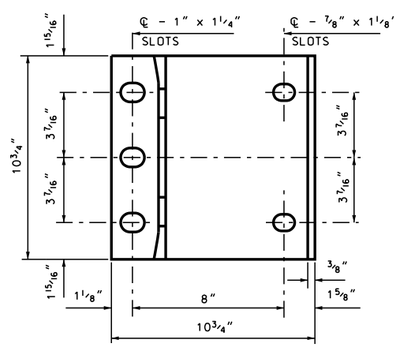

PLAN VIEW

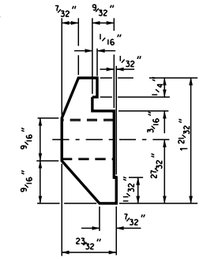

END VIEW

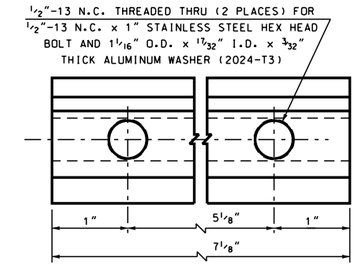

BACK VIEW

RAIL CLAMP BAR

FULL SIZE

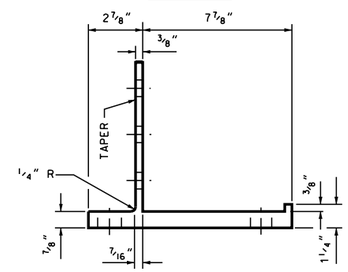

END VIEW

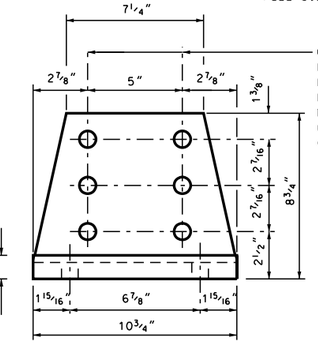

ELEVATION VIEW

℄ - 7/8" Φ HOLES FOR 7/8" Φ HIGH BUTTON HEAD RIVETS ASTM B316 OR B221 ALLOY 6061-T6. RIVETS SHALL HAVE MANUFACTURED HIGH BUTTON HEADS MEETING THE DIMENSIONAL REQUIREMENTS OF ANSI B18.4 AND SHALL HAVE DRIVEN CONE POINT HEADS.

POST BASE DETAILS

SCALE: 3" = 1'-0"

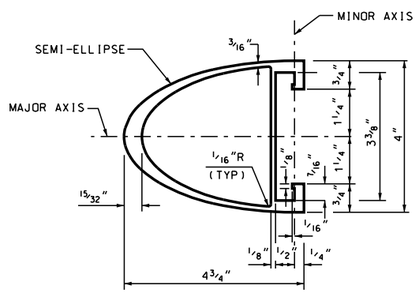

RAIL SECTION

HALF SIZE

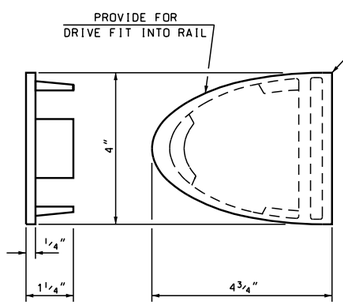

RAIL END CAP

HALF SIZE

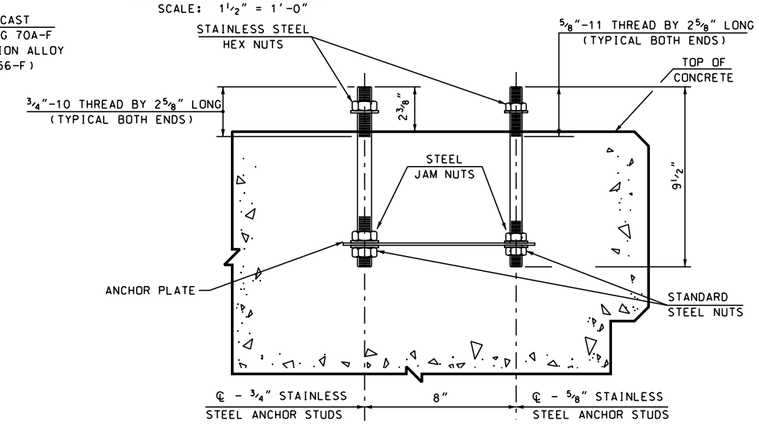

POST ANCHOR ASSEMBLY

SCALE: 3" = 1'-0"

RAIL NOTES:

1. POSTS SHALL BE NORMAL TO FINISHED GRADE.
2. THREADS FOR ANCHOR BOLTS MAY BE ROLLED OR CUT. IF CUT THREADS ARE USED, BOLT DIAMETER SHALL NOT BE LESS THAN NOMINAL DIAMETER. IF ROLLED THREADS ARE USED, BOLT DIAMETER SHALL NOT BE LESS THAN ROOT DIAMETER OF THREADS.
3. JOINTS IN RAIL LENGTH SHALL BE SPLICED AS DETAILED.
4. ENDS OF TUBE SECTIONS SHALL BE SAWED OR MILLED.
5. CUT ENDS SHALL BE TRUE AND SMOOTH.
6. EACH RAIL SECTION SHALL BE ATTACHED TO A MINIMUM OF THREE (3) POSTS.
7. GRIND ALL EDGES SMOOTH.
8. SEE BRIDGE SHEET 61 FOR BALUSTER AND CONNECTOR BAR DETAILS.

MATERIAL:

1. ALUMINUM EXTRUSIONS (POSTS, BASES, RAILS, SPLICE BARS, PINS AND CLAMP BARS) SHALL BE ASTM B221, ALLOY 6061-T6 OR ALLOY 6351-T5 (MIN. 10% ELONGATION).
2. STAINLESS STEEL ANCHOR STUDS, HEX HEAD BOLTS AND HEX NUTS (TYPE 302) SHALL BE ASTM A276, TYPE 430 MOD OR TYPE 304 MOD. (100,000 PSI AND 15% ELONGATION).
3. STEEL EMBEDDED JAM AND HEX NUTS SHALL BE ASTM A563 GRADE A OR BETTER.
4. ALUMINUM WASHERS SHALL BE ASTM B209, ALLOY 2024-T3 ALCLAD.
5. PREFORMED ELASTOMERIC BEARING PAD SHALL MEET REQUIREMENTS OF AASHTO M251.
6. RETROREFLECTIVE DELINEATORS, FIELD DRILLING OF POSTS, STAINLESS STEEL (TYPE 304) BOLTS, NUTS & WASHERS SHALL BE SUBSIDIARY TO ITEM 563.73. SEE STANDARD PLANS FOR ROAD AND BRIDGE CONSTRUCTION (DL-1) FOR ADDITION DETAILS AND SPACING.

ANCHOR ASSEMBLY NOTES:

1. 3/4" AND 5/8" AMERICAN STANDARD FINISHED HEXAGON STEEL NUTS ON BOTTOM OF ANCHOR ASSEMBLY. 3/4" AND 5/8" AMERICAN STANDARD FINISHED HEXAGON STEEL JAM NUTS ON TOP OF ANCHOR PLATE.
2. 3/4" AND 5/8" STAINLESS STEEL HEXAGON NUTS ON TOP ENDS OF BOLTS WITH CLASS 2B THREADS. 13/16" I.D., 2" O.D., 1/8" THICK ALUMINUM WASHERS UNDER NUTS ON TOP. ALL NUTS SHALL COMPLY WITH AMERICAN HEXAGON ANSI SPEC. B18.2. STAINLESS STEEL HEXAGON NUTS SHALL HAVE FULL THREADS.

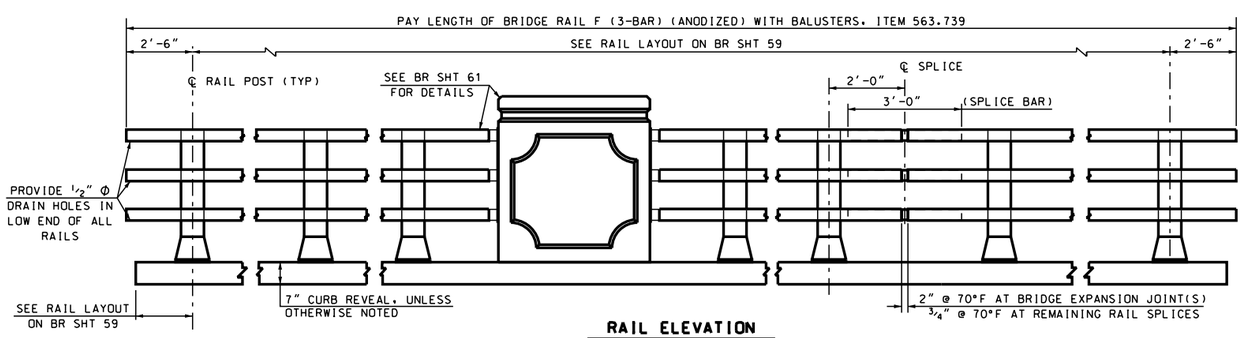

RAIL ELEVATION

NOT TO SCALE

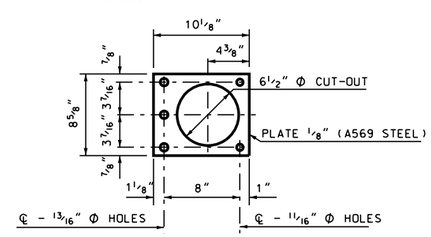

ANCHOR PLATE

SCALE: 1 1/2" = 1'-0"

SUBDIRECTORY	.DGN LOCATOR	SHEET SCALE
BRC\STANDARDS	3BAR	AS NOTED

STATE OF NEW HAMPSHIRE

DEPARTMENT OF TRANSPORTATION * BUREAU OF BRIDGE DESIGN

TOWN LEBANON, NH - HARTFORD, VT BRIDGE NO. 058\128 STATE PROJECT 14957

LOCATION US ROUTE 4 over CONNECTICUT RIVER

BRIDGE RAIL DETAILS (3-BAR ALUMINUM)

REVISIONS AFTER PROPOSAL	BY	DATE		BY	DATE
DESIGNED	NHDOT		CHECKED	NHDOT	1/90
DRAWN	GMC	2/06	CHECKED	PJP	2/06
QUANTITIES	JWP	2/13	CHECKED	PAB	2/13

ISSUE DATE		FEDERAL PROJECT NO.	SHEET NO.	TOTAL SHEETS
REV. DATE	10/8/08	----------	85	157

BRIDGE SHEET 60 OF 71

FILE NUMBER 110-6-1

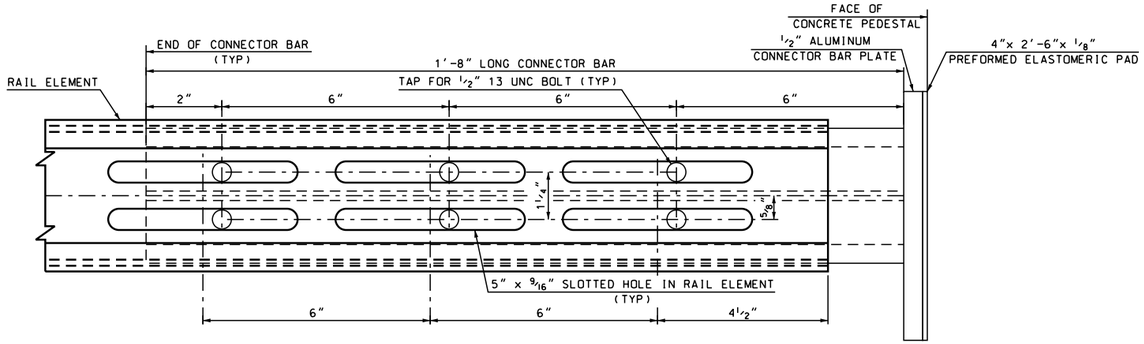

STANDARD CONNECTOR ASSEMBLY DETAIL AT CONCRETE PEDESTALS

BACK ELEVATION VIEW - HALF SIZE

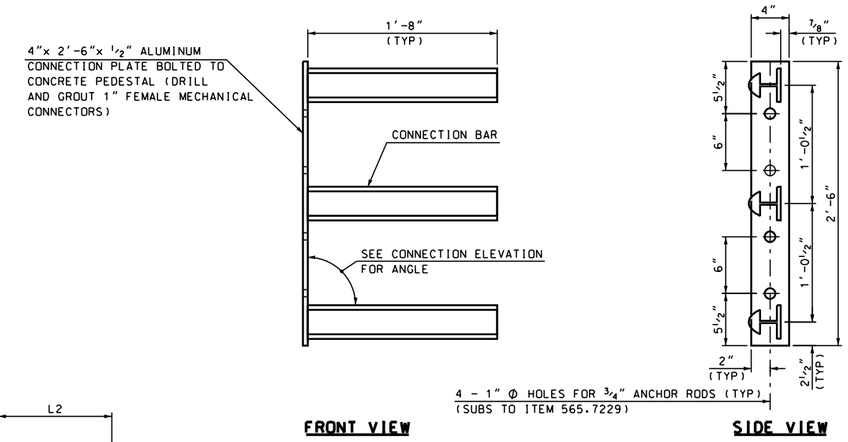

FRONT VIEW **SIDE VIEW**

APPROACH RAIL CONNECTOR PLATE AND CONNECTOR BARS

SCALE: 1" = 1'-0"

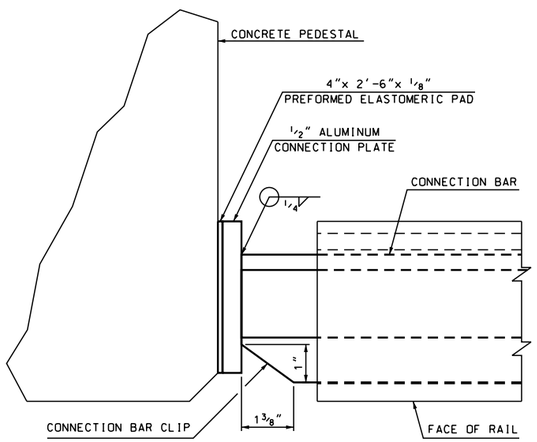

RAIL TO PEDESTAL CONNECTION

PLAN VIEW - HALF SIZE

PEDESTAL LOCATION	Φ 1	L1	Φ 2	L2
ABUTMENT A NORTH RAIL	91°-49'-22"	1'-0"	88°-10'-38"	4'-1 1/4"
PIER 1 NORTH RAIL	91°-19'-18"	2'-3"	88°-40'-42"	2'-3"
PIER 2 NORTH RAIL	88°-57'-30"	3'-0"	91°-02'-30"	3'-0"
ABUTMENT B NORTH RAIL	88°-57'-30"	4'-0 3/16"	90°-57'-49"	2'-3"
ABUTMENT A SOUTH RAIL	91°-49'-22"	1'-0"	88°-10'-38"	3'-9 1/8"
PIER 1 SOUTH RAIL	91°-13'-25"	2'-3"	88°-49'-17"	3'-0"
PIER 2 SOUTH RAIL	88°-57'-30"	3'-0"	91°-02'-30"	3'-0"
ABUTMENT B SOUTH RAIL	88°-56'-40"	4'-10 1/2"	90°-40'-28"	3'-0"

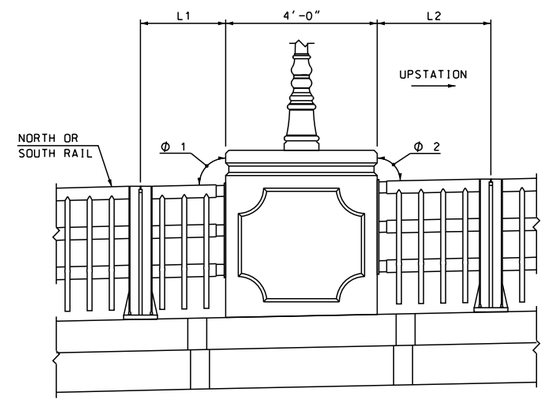

CONNECTION ELEVATION

SCALE: 1/2" = 1'-0"

CONNECTOR-BAR NOTES

(1) CONNECTOR-BARS AND ATTACHMENTS SHALL BE PAID FOR ITEMS 563.739 OR 565.739 AS APPROPRIATE.

(2) THE EXPANSION CONNECTOR-BARS SHALL BE USED TO CONNECT THE BRIDGE RAIL OR BRIDGE APPROACH RAIL TO THE CONCRETE PEDESTAILS AT THE ENDS OF THE BRIDGE DECK (4 LOCATIONS).

(3) ALL CONNECTOR-BARS SHALL BE ATTACHED TO THE RAIL ELEMENT USING PARTIALLY THREADED BOLTS, WITH EITHER THE EXTRUDED WASHER OR THE WELDED WASHER, TIGHTENED SECURELY TO THE ENDS OF THE THREADS, AND LEAVING A 1/8" GAP. FOR BOLT DETAILS SEE BRIDGE SHEET 62.

(4) FOR MATERIAL SPECIFICATIONS SEE BRIDGE SHEET 60.

(5) FEMALE MECHANICAL CONNECTORS SHALL BE ASTM A615H-96a, GRADE 420, EPOXY COATED, AND SHALL BE THREADED TO ACCEPT A 1" Φ S.S. BOLT. EMBEDMENT LENGTH SHALL BE 8".

(6) HOLES DRILLED INTO CONCRETE PEDESTAILS FOR ATTACHMENT OF CONNECTION PLATES SHALL BE CORED DRILLED.

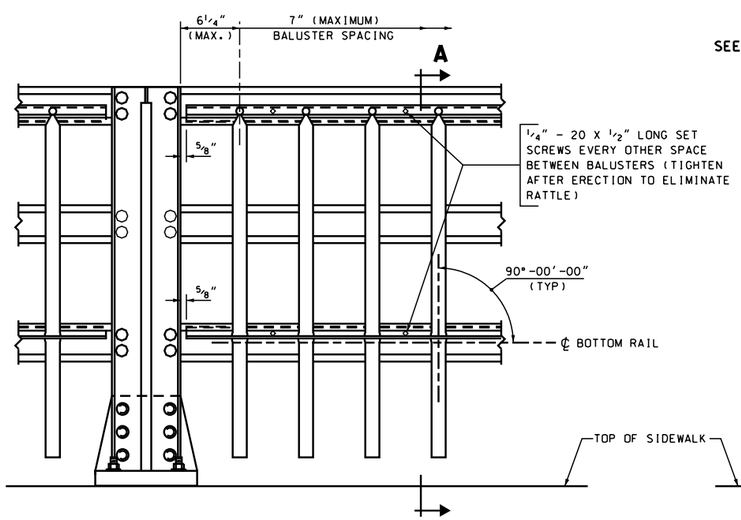

BACK ELEVATION

SCALE: 1 1/2" = 1'-0"

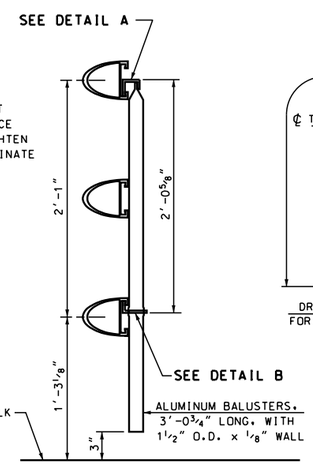

SECTION A-A

SCALE: 1 1/2" = 1'-0"

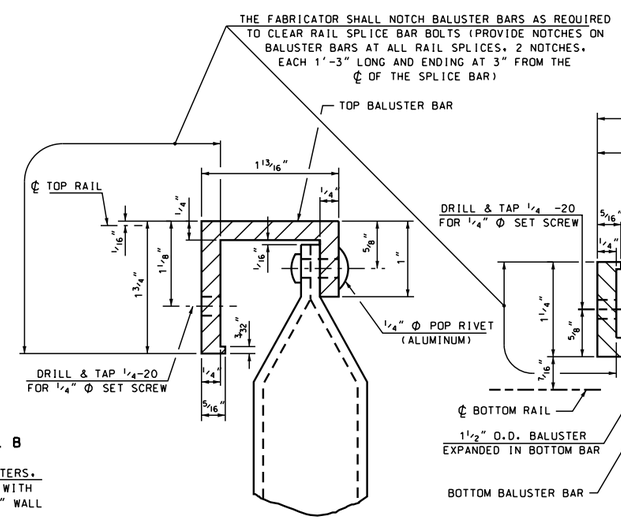

DETAIL A

FULL SCALE

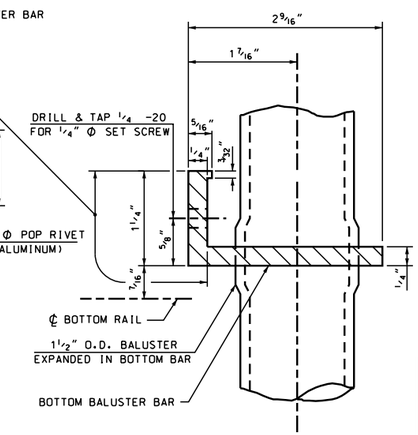

DETAIL B

FULL SCALE

BALUSTER NOTES

1. BALUSTERS AND ATTACHMENTS SHALL BE PAID FOR UNDER ITEM 563.739 AND ITEM 565.7391.
2. ALUMINUM BALUSTERS AND ATTACHMENTS SHALL CONFORM TO REQUIREMENTS SPECIFIED IN N.H. SPECIFICATION 563.2.6.
3. PAY LIMITS FOR BALUSTERS SHALL BE AS SHOWN ON THE PLANS.

STATE OF NEW HAMPSHIRE
DEPARTMENT OF TRANSPORTATION * BUREAU OF BRIDGE DESIGN

TOWN LEBANON, NH - HARTFORD, VT BRIDGE NO. 058\128 STATE PROJECT 14957

LOCATION US ROUTE 4 over CONNECTICUT RIVER

ALUM. BALUSTER AND CONNECTOR BAR DETAILS

REVISIONS AFTER PROPOSAL		BY	DATE		BY	DATE
	DESIGNED	NHDOT	9/87	CHECKED	NHDOT	
	DRAWN	GMC	6/12	CHECKED	RLK	2/13
	QUANTITIES	JWP	2/13	CHECKED	PAB	2/13
	ISSUE DATE	10/87	FEDERAL PROJECT NO.		SHEET NO.	
	REV. DATE	5/12/03	----------		86	

BRIDGE SHEET 61 OF 71

FILE NUMBER 110-6-1

TOTAL SHEETS 157

SUBDIRECTORY	.DGN LOCATOR	SHEET SCALE
BRC\STANDARDS	BALUSTERS	AS NOTED

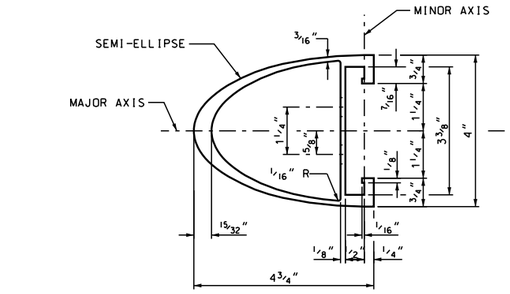

SECTION B-B
HALF SIZE

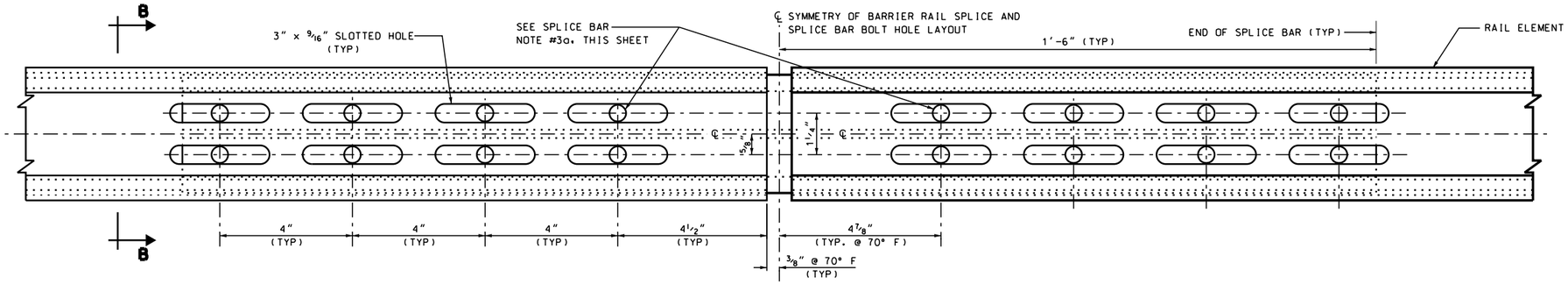

STANDARD SPLICE ASSEMBLY DETAIL
BACK ELEVATION VIEW - HALF SIZE

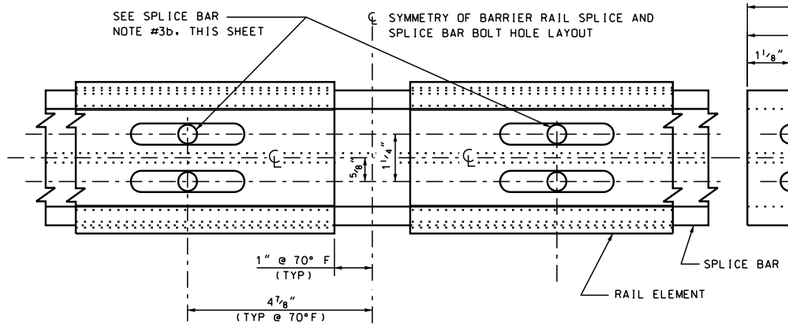

SPLICE ASSEMBLY DETAIL AT BRIDGE EXPANSION JOINT
BACK ELEVATION VIEW - HALF SIZE

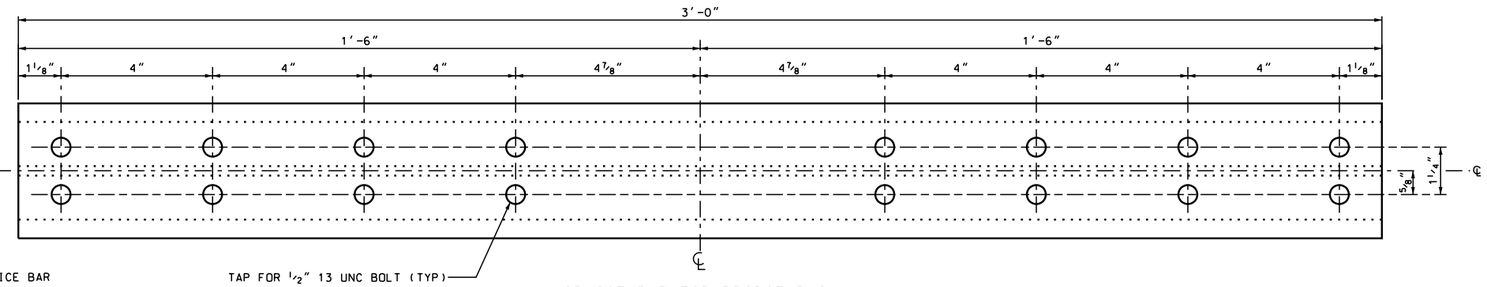

SPLICE BAR FOR BRIDGE RAIL
BACK ELEVATION VIEW - HALF SIZE

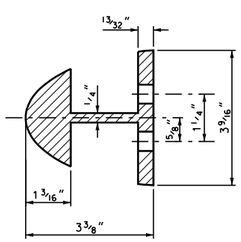

SECTION A-A
HALF SIZE

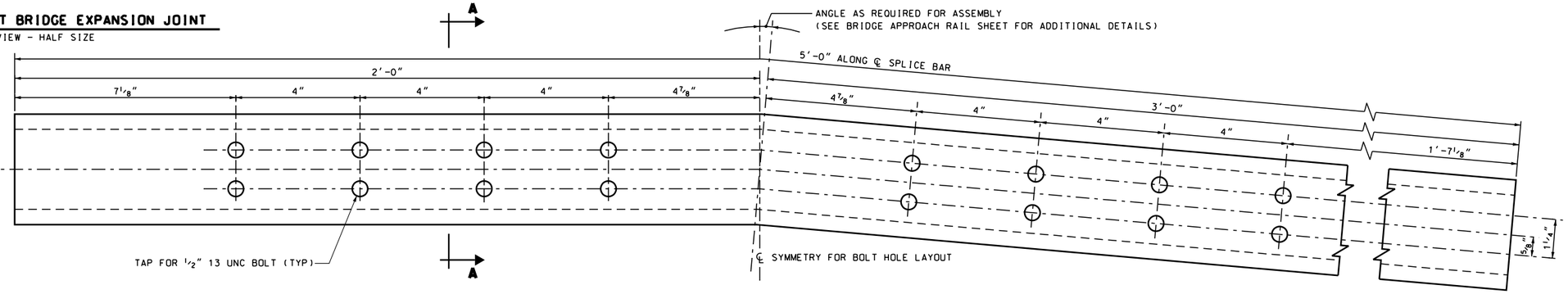

SPLICE BAR FOR BRIDGE APPROACH RAIL
BACK ELEVATION VIEW - HALF SIZE

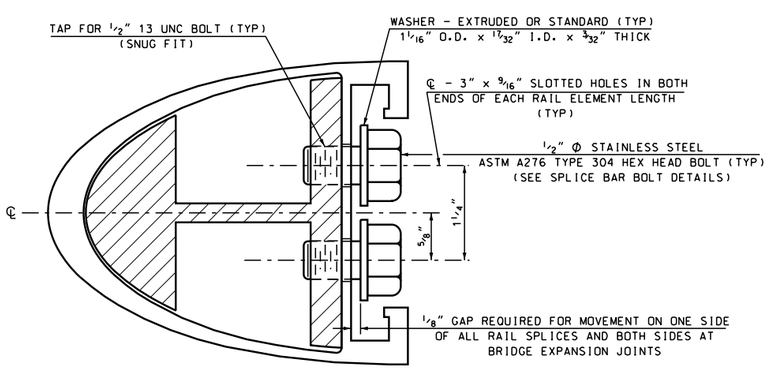

BRIDGE RAIL & SPLICE BAR - ASSEMBLY DETAIL
SECTION VIEW - FULL SCALE

SPLICE BAR NOTES

(1) FOR MATERIALS SPECIFICATIONS AND ADDITIONAL DETAILS, SEE THE BRIDGE RAIL AND BRIDGE APPROACH RAIL SHEETS.

(2) ALL BRIDGE RAILS AND BRIDGE APPROACH RAILS SHALL HAVE SLOTTED HOLES AT BOTH ENDS OF EACH RAIL ELEMENT.

(3) THE SPLICE BAR SHALL BE ATTACHED TO THE RAIL ELEMENT AS FOLLOWS:
- (a) THE STANDARD SPLICE FOR BOTH BRIDGE AND APPROACH RAILS SHALL BE FASTENED ON ONE SIDE USING STANDARD BOLTS & WASHERS TIGHTENED SECURELY. THE OTHER SIDE OF THE SPLICE SHALL USE THE PARTIALLY THREADED BOLT WITH EITHER THE EXTRUDED WASHER OR THE WELDED WASHER, TIGHTENED SECURELY TO THE END OF THE THREADS, AND LEAVING A 1/8" GAP. THIS ALLOWS EXPANSION ON ONE SIDE OF THE JOINT.
- (b) THE RAIL SPLICE AT THE BRIDGE EXPANSION JOINT SHALL BE FASTENED ON BOTH SIDES OF THE RAIL SPLICE USING THE PARTIALLY THREADED BOLTS, WITH EITHER THE EXTRUDED WASHER OR THE WELDED WASHER, TIGHTENED SECURELY TO THE END OF THE THREADS, AND LEAVING A 1/8" GAP. THIS ALLOWS EXPANSION ON BOTH SIDES OF THE JOINT.

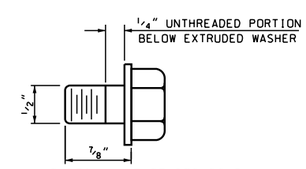

PARTIALLY THREADED BOLT WITH EXTRUDED WASHER

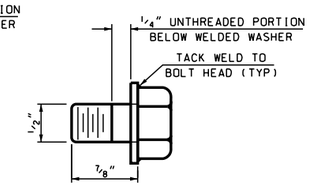

PARTIALLY THREADED BOLT WITH WELDED WASHER

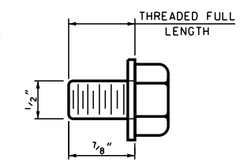

STANDARD BOLT AND WASHER

SPLICE BAR BOLT DETAILS
FULL SIZE

STATE OF NEW HAMPSHIRE
DEPARTMENT OF TRANSPORTATION * BUREAU OF BRIDGE DESIGN

TOWN LEBANON, NH - HARTFORD, VT | BRIDGE NO. 058\128 | STATE PROJECT 14957
LOCATION US ROUTE 4 over CONNECTICUT RIVER

BRIDGE RAIL SPLICE BAR DETAILS (ALUMINUM)

REVISIONS AFTER PROPOSAL	BY	DATE		BY	DATE
DESIGNED	NHDOT	9/87	CHECKED	NHDOT	
DRAWN	NDS/MTG	4/01	CHECKED	PJP	6/01
QUANTITIES			CHECKED		
ISSUE DATE	10/87	FEDERAL PROJECT NO.		SHEET NO.	
REV. DATE	1/02/01	----------		87	

BRIDGE SHEET 62 OF 71
FILE NUMBER 110-6-1
TOTAL SHEETS 157

SUBDIRECTORY	.DGN LOCATOR	SHEET SCALE
BRC\STANDARDS	AL-SPLICEBAR	AS NOTED

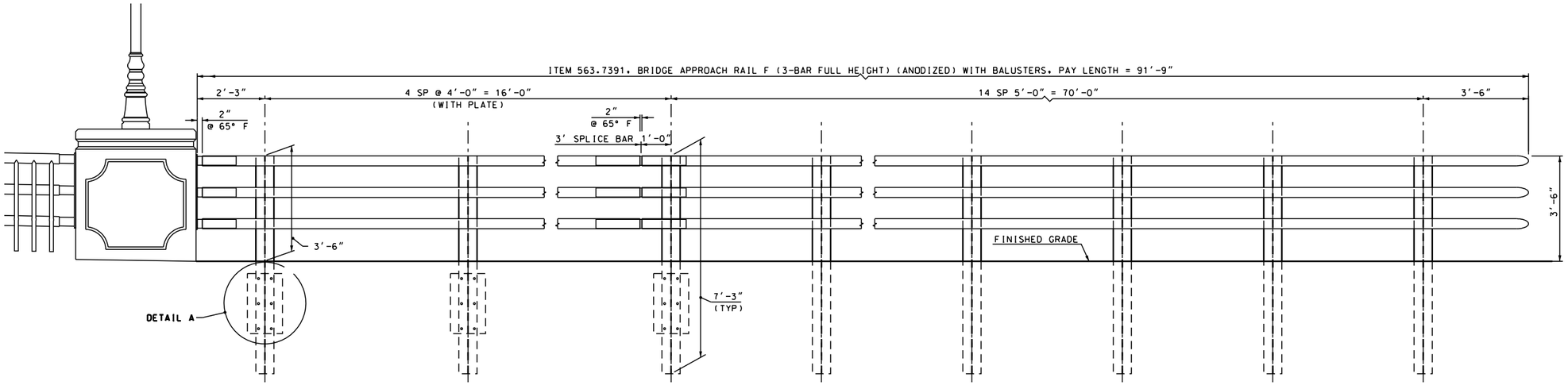

NE CORNER 3-BAR APPROACH ELEVATION

SCALE: 1/2" = 1'-0"

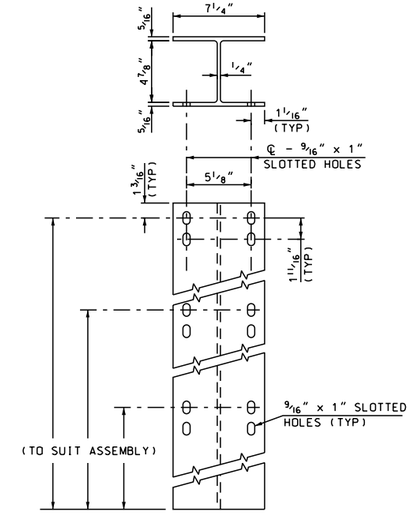

RAIL POST

SCALE: 2" = 1'-0"

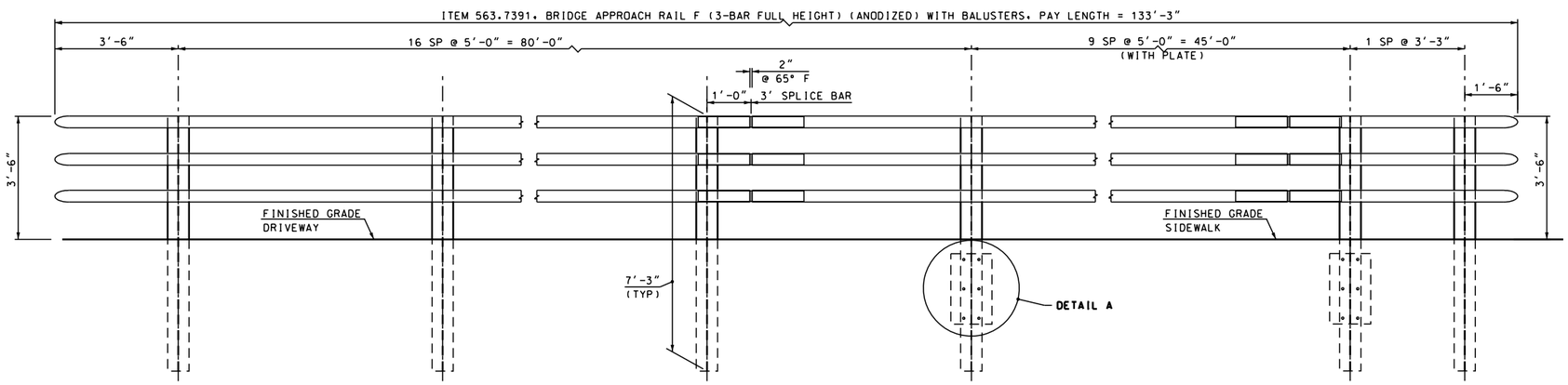

STATE LINE SPORTS 3-BAR APPROACH ELEVATION

SCALE: 1/2" = 1'-0"

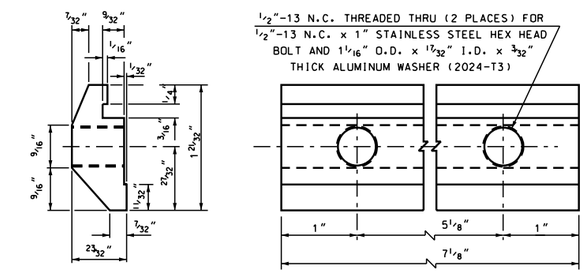

END VIEW

RAIL CLAMP BAR

FULL SIZE

BACK VIEW

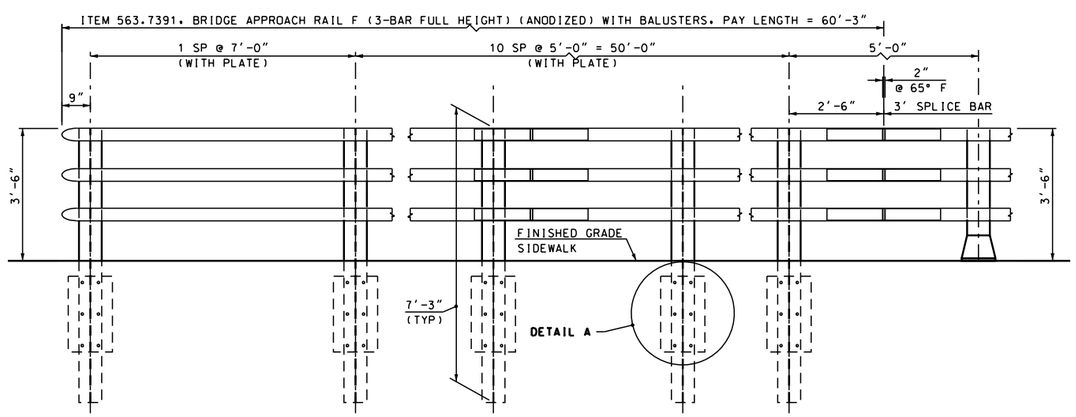

NW CORNER 3-BAR APPROACH ELEVATION

SCALE: 1/2" = 1'-0"

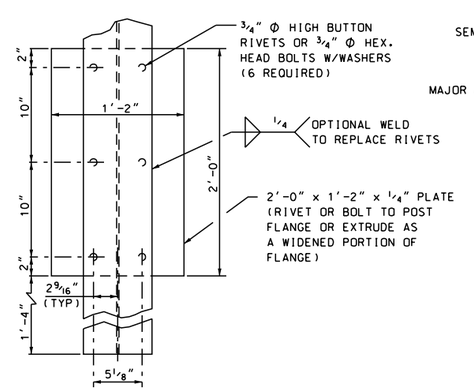

DETAIL A

SCALE: 1 1/2" = 1'-0"

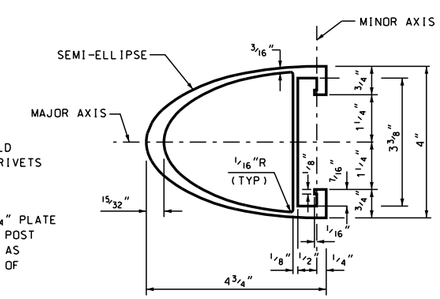

RAIL SECTION

HALF SIZE

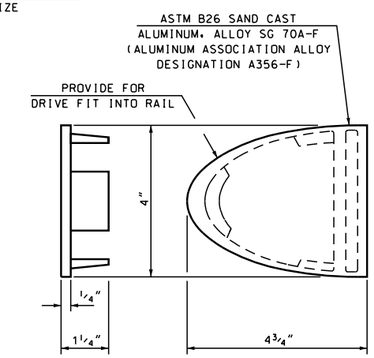

RAIL END CAP

HALF SIZE

SUBDIRECTORY	.DGN LOCATOR	SHEET SCALE
BRC/STANDARDS	14957SportsRail	AS NOTED

STATE OF NEW HAMPSHIRE

DEPARTMENT OF TRANSPORTATION * BUREAU OF BRIDGE DESIGN

TOWN LEBANON, NH - HARTFORD, VT BRIDGE NO. 058\128 STATE PROJECT 14957

LOCATION US ROUTE 4 over CONNECTICUT RIVER

FULL HEIGHT BRIDGE APPROACH RAIL

REVISIONS AFTER PROPOSAL		BY	DATE		BY	DATE
	DESIGNED	GMC	6/12	CHECKED	KFD	6/12
	DRAWN	GMC	6/12	CHECKED	SMG/PAB	6/12
	QUANTITIES	GMC	6/12	CHECKED	PAB	6/12

ISSUE DATE	FEDERAL PROJECT NO.	SHEET NO.
REV. DATE	----------	88

BRIDGE SHEET 63 OF 71

FILE NUMBER 110-6-1

TOTAL SHEETS 157

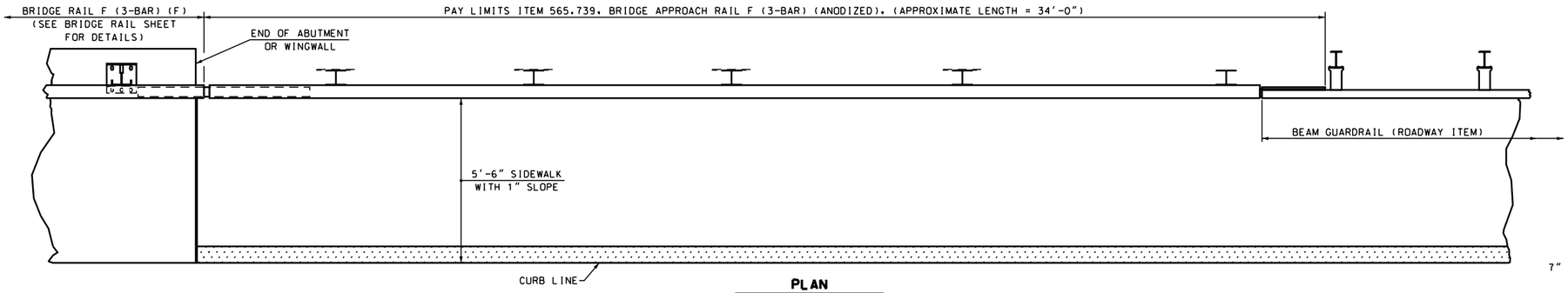

PLAN

SCALE: 1/2" = 1'-0"

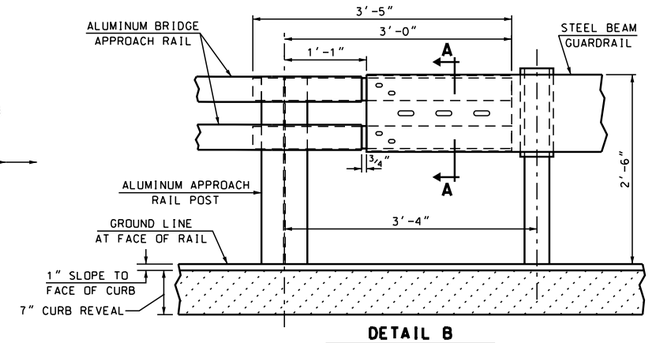

DETAIL B

SCALE: 1" = 1'-0"

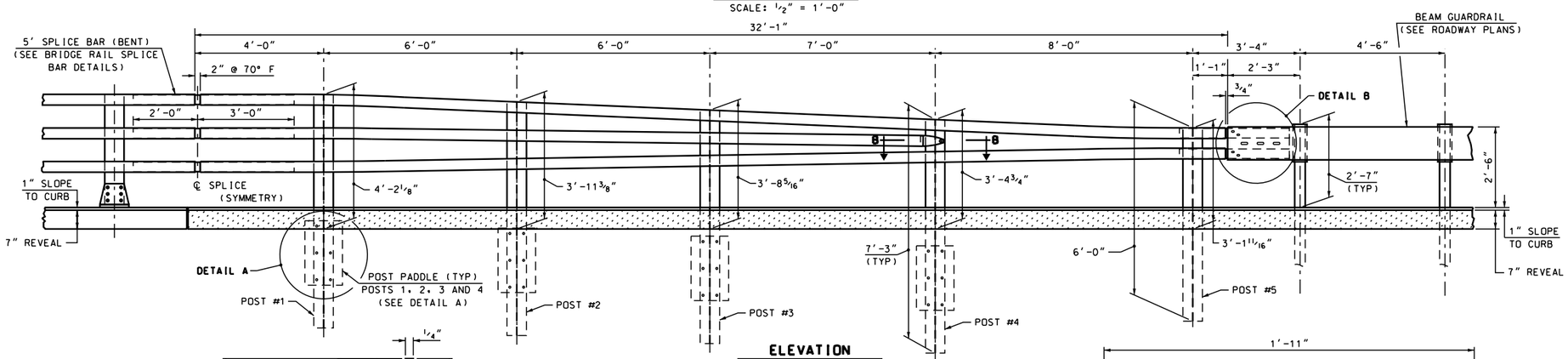

ELEVATION

SCALE: 1/2" = 1'-0"

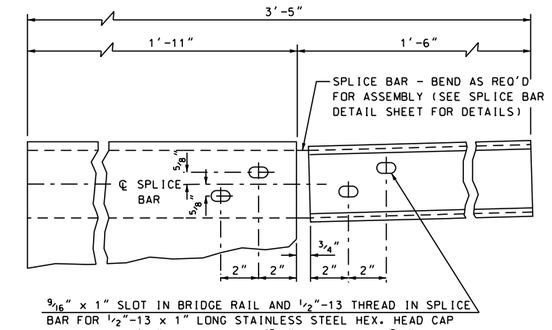

9/16" x 1" SLOT IN BRIDGE RAIL AND 1/2"-13 THREAD IN SPLICE BAR FOR 1/2"-13 x 1" LONG STAINLESS STEEL HEX. HEAD CAP SCREW WITH 1 1/16" OUTSIDE Φ x 17/32" INSIDE Φ x 3/32" THICK ALUMINUM WASHER

SPLICE BAR DETAIL

SCALE: 3" = 1'-0"
(BACK VIEW)

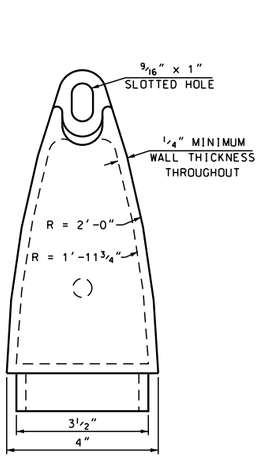

TOP VIEW

SCALE: HALF SIZE

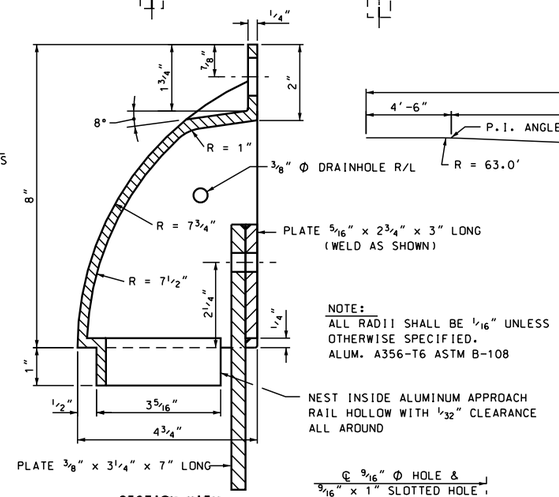

NOTE:
ALL RADII SHALL BE 1/16" UNLESS OTHERWISE SPECIFIED.
ALUM. A356-T6 ASTM B-108

SECTION VIEW

SCALE: HALF SIZE

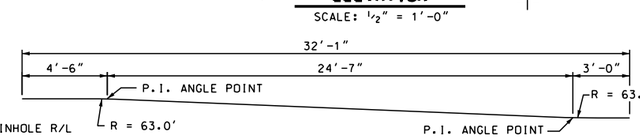

RAIL BENDING DIAGRAM

NOT TO SCALE

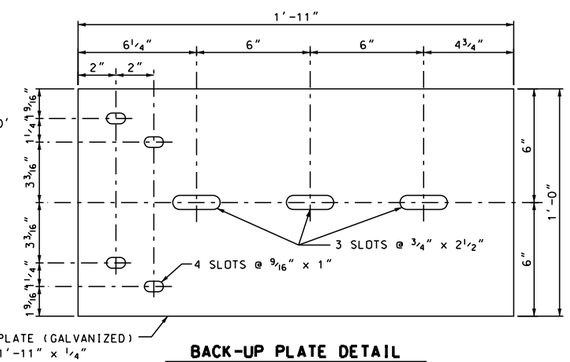

BACK-UP PLATE DETAIL

SCALE: 3" = 1'-0"

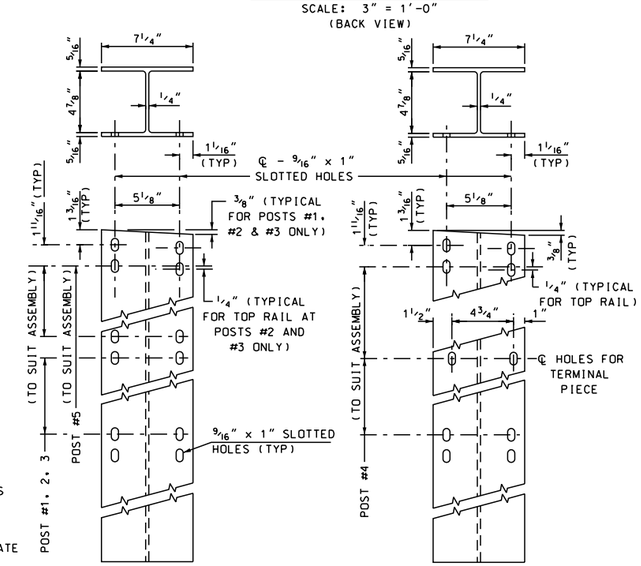

RAIL POST - FRONT ELEVATION

SCALE: 2" = 1'-0"

USE WITH SIDEWALK

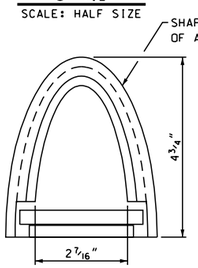

END VIEW

SCALE: HALF SIZE

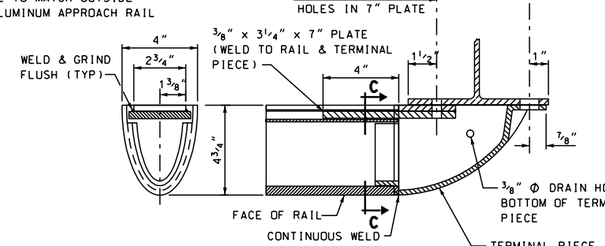

SECTION C-C

SCALE: 3" = 1'-0"

SECTION B-B

SCALE: 3" = 1'-0"

TERMINAL PIECE DETAILS

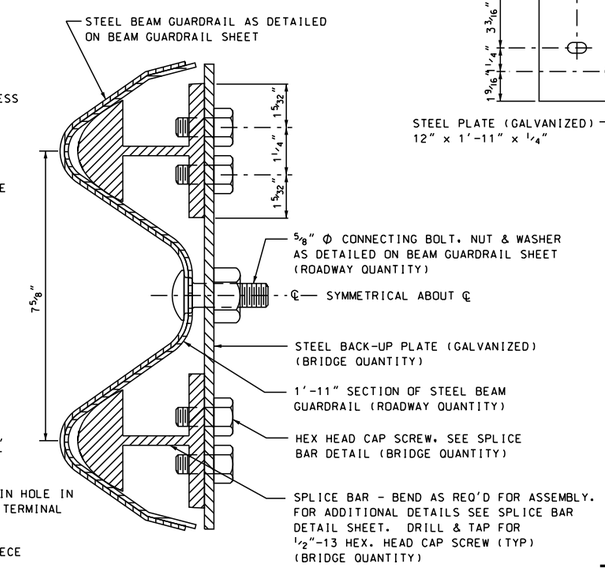

SECTION A-A

HALF SCALE

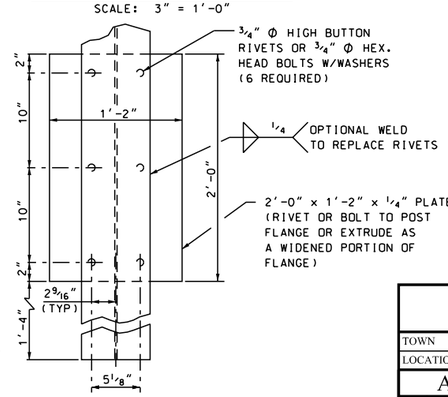

DETAIL A

SCALE: 1 1/2" = 1'-0"

STATE OF NEW HAMPSHIRE
DEPARTMENT OF TRANSPORTATION * BUREAU OF BRIDGE DESIGN

TOWN LEBANON, NH - HARTFORD, VT | BRIDGE NO. 058\128 | STATE PROJECT 14957
LOCATION US ROUTE 4 over CONNECTICUT RIVER

APPROACH RAIL DETAILS (3-BAR ALUMINUM)

REVISIONS AFTER PROPOSAL		BY	DATE		BY	DATE
	DESIGNED	NHDOT	9/87	CHECKED	NHDOT	
	DRAWN	GMC/PJP	4/06	CHECKED	PJP	4/06
	QUANTITIES	JWP	2/13	CHECKED	PAB	2/13
	ISSUE DATE	---	FEDERAL PROJECT NO.		SHEET NO.	
	REV. DATE	10/30/10	----------		89	

BRIDGE SHEET 64 OF 71
FILE NUMBER 110-6-1
TOTAL SHEETS 157

SUBDIRECTORY	.DGN LOCATOR	SHEET SCALE
BRC\STANDARDS	APP-3BAR-SW_SP	AS NOTED

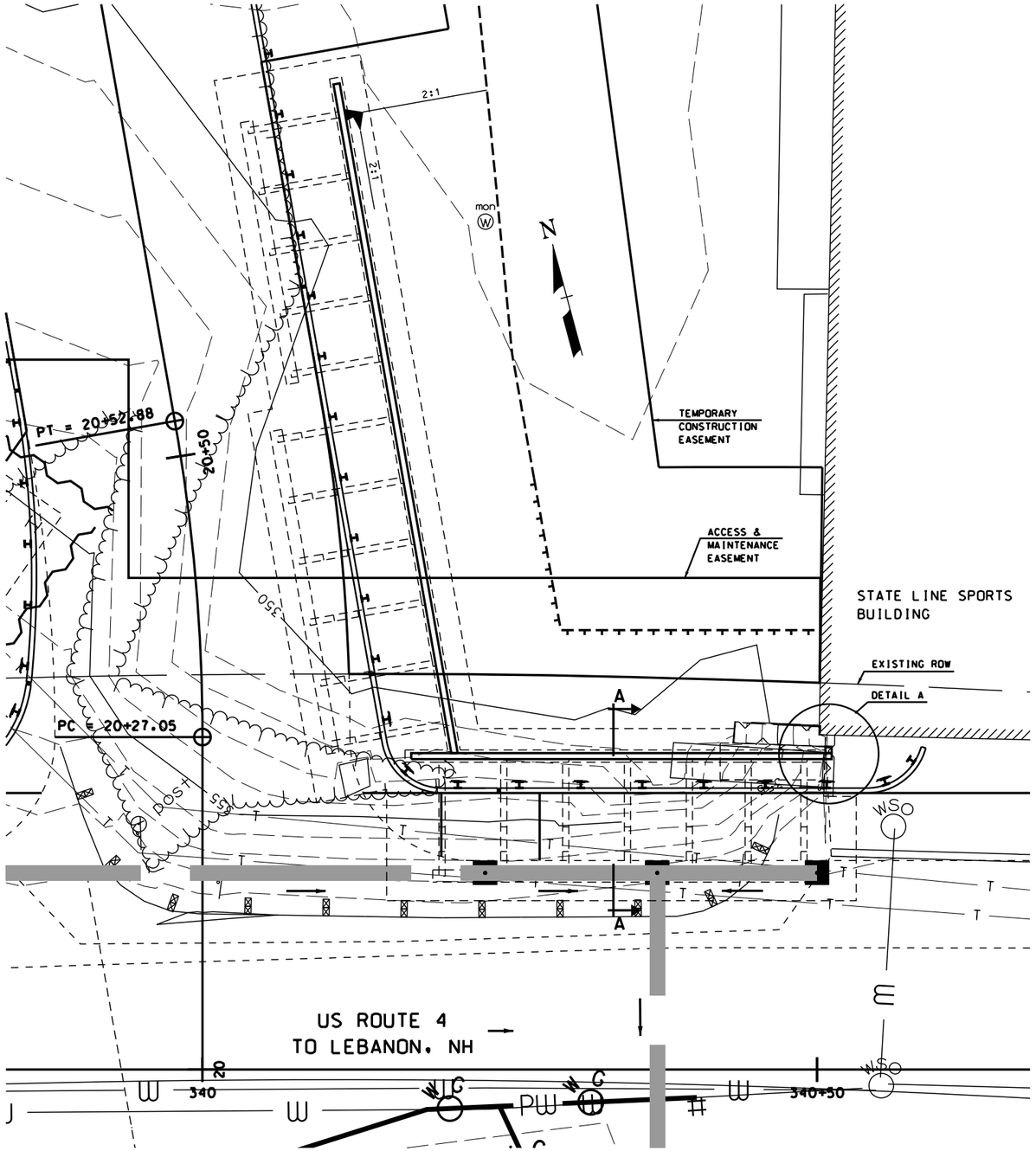

PCM RETAINING WALL SITE PLAN

SCALE: 3/16" = 1'-0"

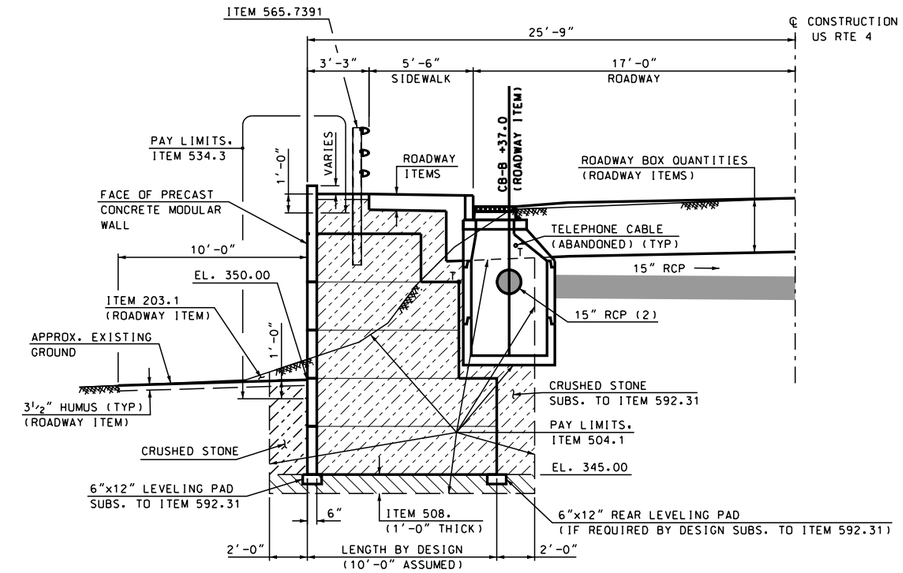

SECTION A-A

SCALE: 1/4"=1'

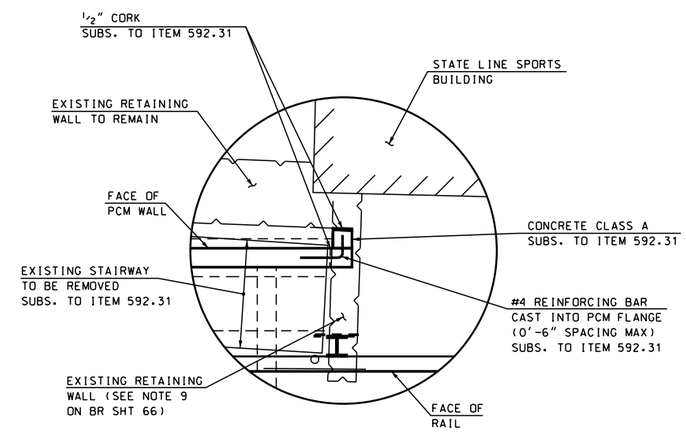

DETAIL A

SCALE: 1/2"=1'

STATE OF NEW HAMPSHIRE
DEPARTMENT OF TRANSPORTATION * BUREAU OF BRIDGE DESIGN

TOWN LEBANON, NH - HARTFORD, VT BRIDGE NO. STATE PROJECT 14957

LOCATION US ROUTE 4

PCM RETAINING WALL SITE PLAN

REVISIONS AFTER PROPOSAL		BY	DATE		BY	DATE
	DESIGNED	KFD	07/12	CHECKED	MGL	12/12
	DRAWN	SMG	07/12	CHECKED	KFD	08/12
	QUANTITIES	KFD	08/12	CHECKED	PAB	1/13

SUBDIRECTORY	.DGN LOCATOR	SHEET SCALE
BRC/PCMWALL	14957PCMWall	AS NOTED

ISSUE DATE	FEDERAL PROJECT NO.	SHEET NO.
REV. DATE	----------	90

BRIDGE SHEET 65 OF 71

FILE NUMBER 110-6-1

TOTAL SHEETS 157

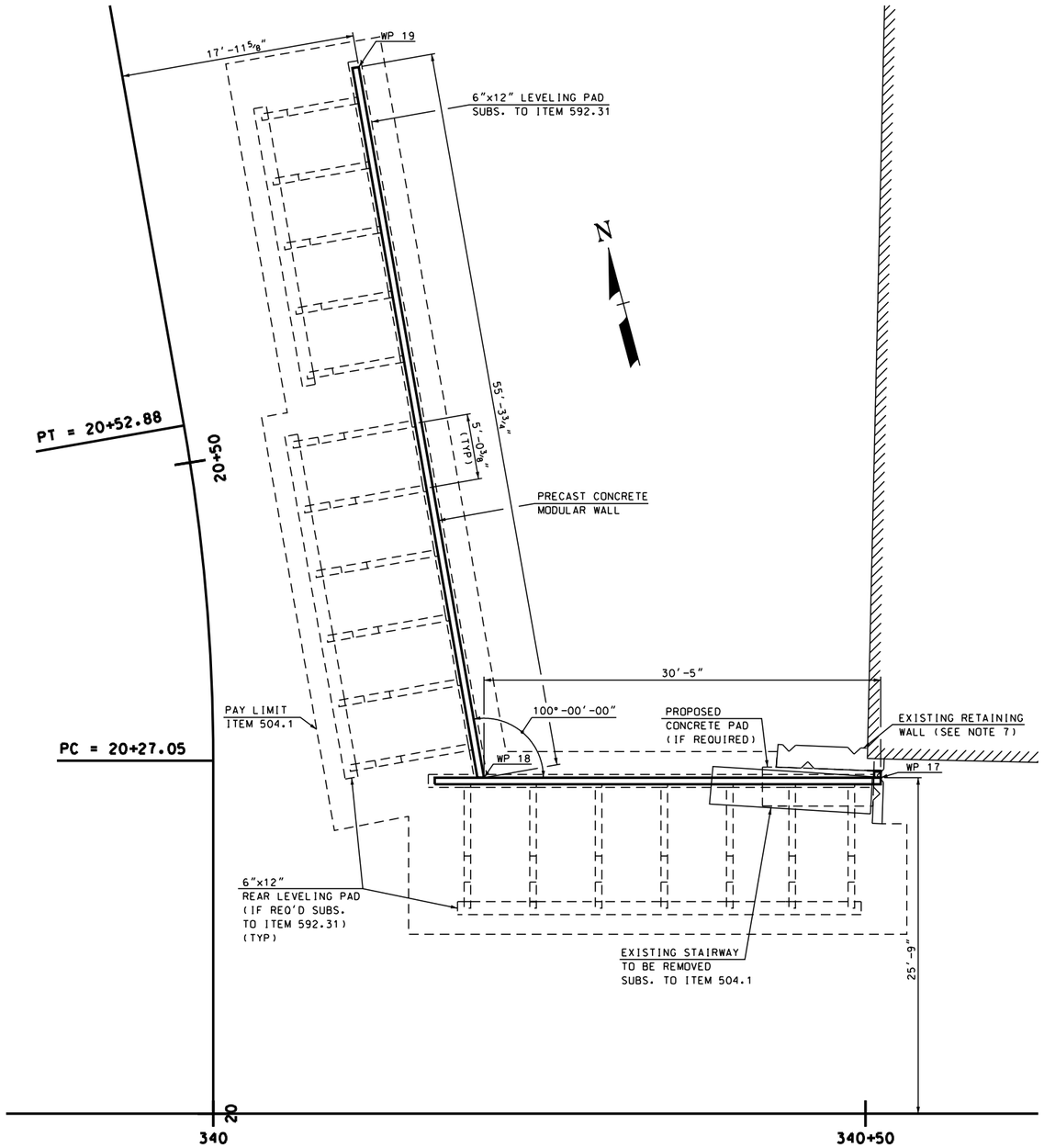

PCM RETAINING WALL LAYOUT

SCALE: 3/16" = 1'-0"

RETAINING WALL NOTES

1. THE RETAINING WALL SHALL BE A PRECAST CONCRETE MODULAR (PCM) WALL. MODULE DIMENSIONS AND CONFIGURATION SHALL DEPEND ON THE PCM WALL MANUFACTURER'S DESIGN.
2. REFER TO THE ITEM 592.31 SPECIAL PROVISION FOR APPROVED WALL SYSTEMS, AND THE PCM DESIGN AND CONSTRUCTION REQUIREMENTS.
3. THE CONTRACTOR SHALL BE RESPONSIBLE FOR THE DESIGN AND INTERNAL STABILITY OF THE SELECTED PCM WALL SYSTEM. THE CONTRACTOR SHALL SUBMIT PCM WALL SYSTEM PLANS AND CALCULATIONS IN ACCORDANCE WITH SECTION 105.02. ALL PLANS AND CALCULATIONS SHALL BE PREPARED BY A NH LICENSED PROFESSIONAL ENGINEER, AND SHALL BEAR THE ENGINEER'S SEAL AND SIGNATURE.
4. THE PCM RETAINING WALL PLANS SHALL INCLUDE END UNIT DETAILS AT ALL WALLSTEPS AND AT THE ENDS OF THE WALL, AS APPLICABLE.
5. ALL COSTS ASSOCIATED WITH THE DESIGN, FABRICATION, AND CONSTRUCTION OF THE PCM RETAINING WALL INCLUDING REINFORCED CONCRETE MODULES AND END OR CLOSURE UNITS, CRUSHED STONE BACKFILL WITHIN, ABOVE, BEHIND AND IN FRONT OF THE MODULES AS DEFINED IN THE CONTRACT DRAWINGS, CAST-IN-PLACE CONCRETE LEVELING PADS, JOINT MATERIALS, GEOTEXTILE AT WALL JOINTS, WALL SUPPLIERS TECHNICAL REPRESENTATIVE VISITS, AND INCIDENTALS SHALL BE SUBSIDIARY TO ITEM 592.31. ITEM 592.31 SHALL ALSO INCLUDE THE CAST-IN-PLACE MASS CONCRETE BLOCK, AS DESCRIBED IN NOTE 7.
6. ITEM 534.3, WATER REPELLENT (SILANE-SILOXANE), SHALL BE APPLIED TO THE PCM WALL FACE, TOP, AND BACK TO 12 INCHES BELOW THE FINISH GRADE.
7. THE BOTTOM OF THE EXISTING RETAINING WALL THAT IS PERPENDICULAR TO THE WEST FACE OF THE STATELINE SPORTS BUILDING IS UNKNOWN. THIS WALL MAY BE CONTINUOUS WITH THE SOUTH SIDE FOUNDATION WALL FOR THE STATELINE SPORTS BUILDING. THE 4 FOOT WIDE CAST-IN-PLACE, MASS CONCRETE BLOCK THAT IS SHOWN ON SECTION B-B IS INTENDED TO PROVIDE FROST PROTECTION AND PROTECTION AGAINST UNDERMINING, IF THE EXISTING BUILDING AND FOUNDATION WALL IS REMOVED IN THE FUTURE. EXCAVATION IN THE AREA ADJACENT TO THE EXISTING RETAINING WALL AND FOUNDATION WALL SHALL NOT EXTEND BELOW THE BOTTOM OF THE EXISTING WALLS. THE BOTTOM OF THE MASS CONCRETE BLOCK SHALL EXTEND TO EITHER THE BOTTOM OF THE EXISTING WALL AS DETERMINED DURING EXCAVATION, OR TO EL. 345.0, WHICHEVER IS HIGHER. THE EXCAVATED SLOPE THAT EXTENDS SOUTHWARD FROM THE BOTTOM EDGE OF THE EXISTING WALL SHALL BE NO STEEPER THAN 2H:1V, AS SHOWN ON SECTION B-B. THE MASS CONCRETE BLOCK SHALL MEET THE REQUIREMENTS OF ITEM 520.213 AND SHALL BE SUBSIDIARY TO ITEM 592.31.
8. THE EXCAVATION TO THE FINAL GRADE AND THE CONTROL OF GROUNDWATER SHALL BE CONDUCTED IN A MANNER TO PREVENT DISTURBANCE OF THE EXISTING RETAINING WALL AND FOUNDATION SUPPORT MATERIALS. PUMPING EQUIPMENT SHALL BE PROPERLY FILTERED TO PREVENT LOSS OF FINES. ANY DISTURBED AREAS SHALL BE OVER-EXCAVATED AND REPLACED WITH COMPACTED STRUCTURAL FILL AT THE CONTRACTOR'S EXPENSE. ALL COSTS ASSOCIATED WITH DEWATERING AND LATERAL SUPPORT OF THE WALL EXCAVATION SHALL BE SUBSIDIARY TO ITEM 504.1.
9. "DETAIL A" IS A CONCEPTUAL DESIGN BASED ON AN ASSUMED EXISTING RETAINING WALL LOCATION AND LIMIT. THE CONTRACTOR SHALL FIELD VERIFY THE END OF THE EXISTING RETAINING WALL AND DETERMINE THE LENGTH OF THE PROTRUDING REINFORCEMENT BEFORE FABRICATION OF THE END PCM UNITS. DESIGN OF THE END UNITS SHALL BE DONE BY THE FABRICATOR AND SUBMITTED FOR APPROVAL IN ACCORADANCE WITH SECTION 105.02. THE DESIGN SHALL CLOSE OFF THE GAP BETWEEN THE PCM WALL AND EXISTING RETAINING WALL/BUILDING FOUNDATION AND BE ABLE TO WITHSTAND ANY SOIL PRESSURES ON IT. ALL WORK AND MATERAILS ARE SUBSIDIARY TO ITEM 592.31.
10. IF THE EXISTING RETAINING WALL PERPENDICULAR TO THE SOUTH FACE OF THE STATELINE SPORTS BUILDING IS A FULL HEIGHT RETAINING WALL. THE TOP OF THE WALL SHALL BE REMOVED DOWN TO AN ELEVATION OF 352.6 ± TO AVOID PROPOSED DRAINAGE. THE PCM WALL FLANGES THAT ARE BELOW THAT ELEVATION SHALL BE SHORTENED TO NOT CONFLICT WITH THE REMAINING RETAINING WALL. A 1/2" THICK CORK BOARD SHALL BE PLACED BETWEEN THE EXISITING RETAINING WALL AND PCM WALL. THE PCM WALL FLANGES THAT ARE ABOVE THAT ELEVATION SHALL STEP OUT OVER THE TOP OF THE EXISTING WALL. THE CLOSURE POUR SHALL EXTEND FROM THAT ELEVATION TO THE TOP OF THE PCM WALL. UPON EXCAVATION, IF IT IS FOUND THAT IT IS NOT A FULL HEIGHT RETAINING WALL BUT CURB THAT EXTENDS A SHORT DISTANCE INTO THE GROUND, THEN IT SHALL BE COMPLETELY REMOVED WITH THE CLOSURE POUR EXTENDING FROM THE TOP OF THE PCM WALL TO THE BOTTOM. REMOVAL OF THE EXISTING RETAINING WALL WILL BE SUBSIDIARY TO ITEM 504.1.
11. UPON COMPLETION OF THE PCM WALL DESIGN, THE FINAL STEM LOCATIONS SHALL BE CHECKED AGAINST THE PROPOSED GUARDRAIL LAYOUT. IF CONFLICTS OCCUR BETWEEN THE PCM WALL STEMS AND GUARDRAIL POSTS THE CONTRACTOR SHALL SUBMIT A NEW GUARDRAIL LAYOUT. SEE BRIDGE SHEET 59 FOR THE RAIL LAYOUT.
12. CRUSHED STONE BACKFILL SHALL CONFORM TO THE STANDARD SPECIFICATIONS FOR ITEM 304.4. (SUBSIDIARY TO ITEM 592.31)
13. FOR WORKING POINT COORDINATES SEE BRIDGE SHEET 5.
14. THE EXISTING STEEL STAIRWAY IN THE VICINITY OF THE EXISTING RETAINING WALL AT THE SOUTHWEST CORNER OF THE STATELINE SPORTS BUILDING IS TO BE REMOVED AND DISPOSED OF SUBSIDIARY TO ITEM 504.1.
15. THE PCM WALL LAYOUT AND WORKING POINTS ARE REFERENCED TO THE FRONT FACE OF THE PRECAST CONCRETE MODULE AS DEFINED BY THE 6-INCH STRUCTURAL THICKNESS OF THE MODULE FACE, NOT THE FACE OF ANY ARCHITECTURAL FINISH THAT EXTENDS BEYOND THE STRUCTURAL FACE OF THE MODULE.
16. THE PCM WALL REINFORCING STEEL SHALL BE GALVANIZED AND THE CONCRETE SHALL INCLUDE A CORROSION INHIBITOR (CALCIUM NITRATE), AS DESCRIBED IN THE SECTION 592.31 SPECIAL PROVISION.

STATE OF NEW HAMPSHIRE
DEPARTMENT OF TRANSPORTATION * BUREAU OF BRIDGE DESIGN

TOWN LEBANON, NH - HARTFORD, VT | BRIDGE NO. | STATE PROJECT 14957
LOCATION US ROUTE 4

PCM RETAINING WALL LAYOUT AND NOTES

REVISIONS AFTER PROPOSAL		BY	DATE		BY	DATE
	DESIGNED	KFD	07/12	CHECKED	MGL	12/12
	DRAWN	SMG	07/12	CHECKED	KFD	08/12
	QUANTITIES	KFD	08/12	CHECKED	PAB	1/13

SUBDIRECTORY	.DGN LOCATOR	SHEET SCALE	ISSUE DATE	FEDERAL PROJECT NO.	SHEET NO.	TOTAL SHEETS
BRC/PCMWALL	14957PCMWall	AS NOTED	REV. DATE	----------	91	157

BRIDGE SHEET 66 OF 71
FILE NUMBER 110-6-1

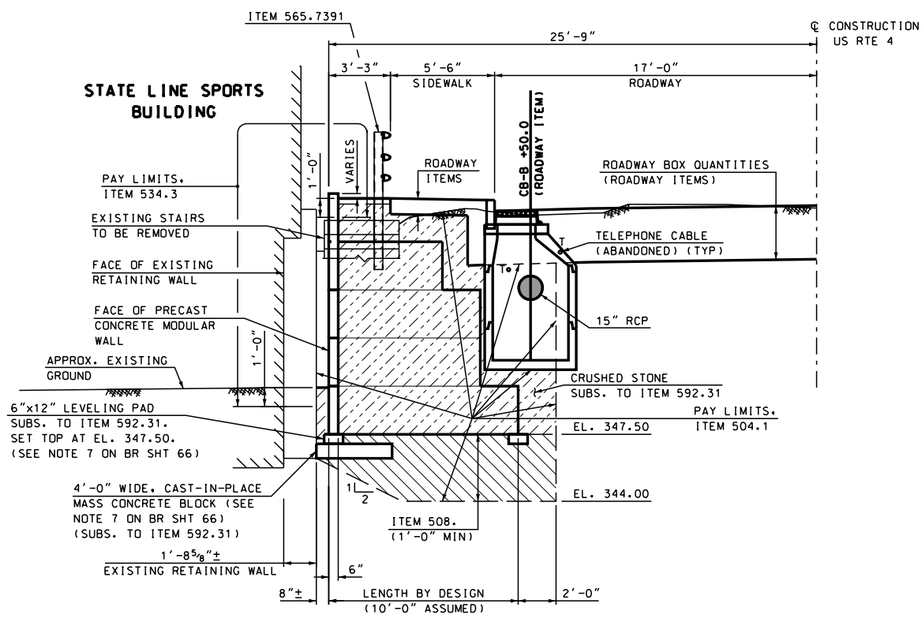

SECTION B-B

SCALE: 1/4"=1'

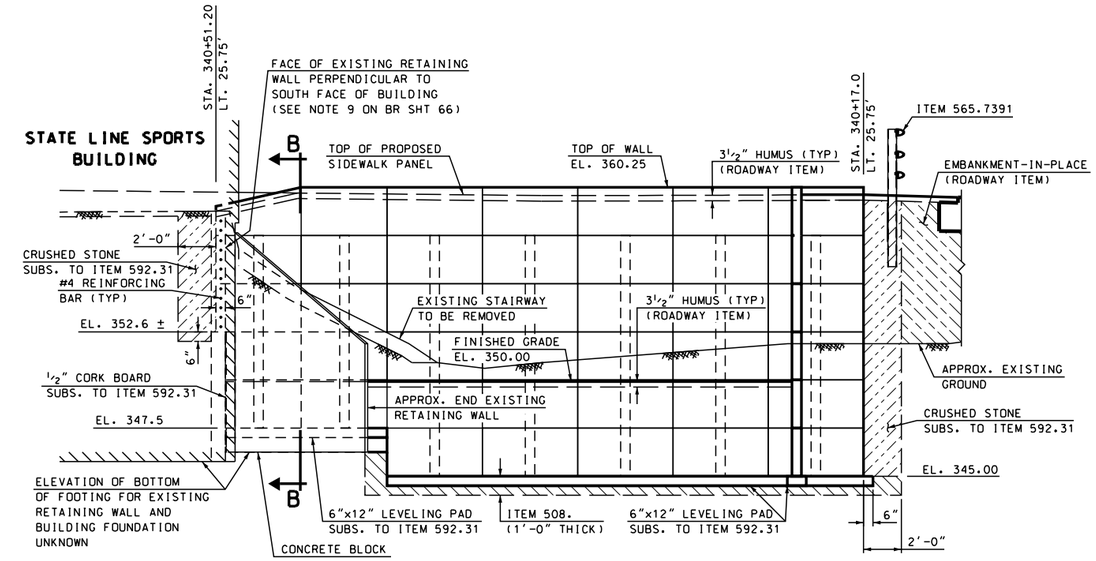

PCM RETAINING WALL ELEVATION ALONG US ROUTE 4

(3-BAR ALUMINUM RAIL ALONG WALL NOT SHOWN FOR CLARITY)
SCALE: 1/4" = 1'-0"

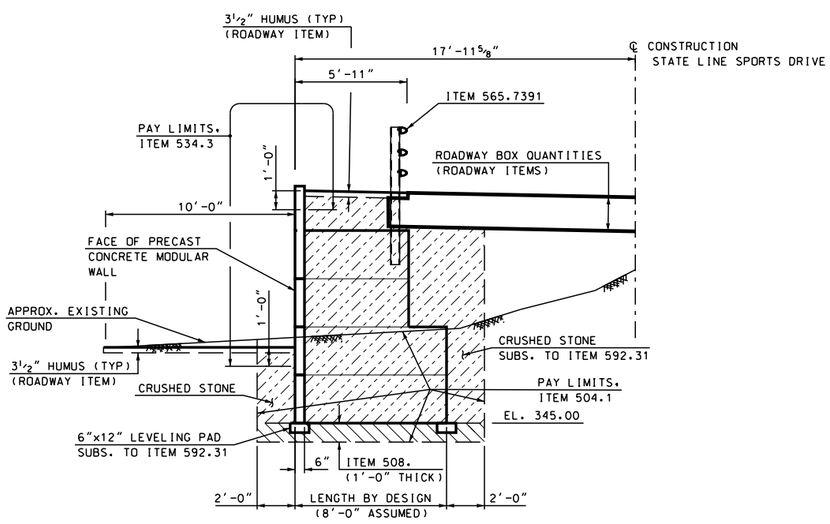

SECTION C-C

SCALE: 1/4"=1'

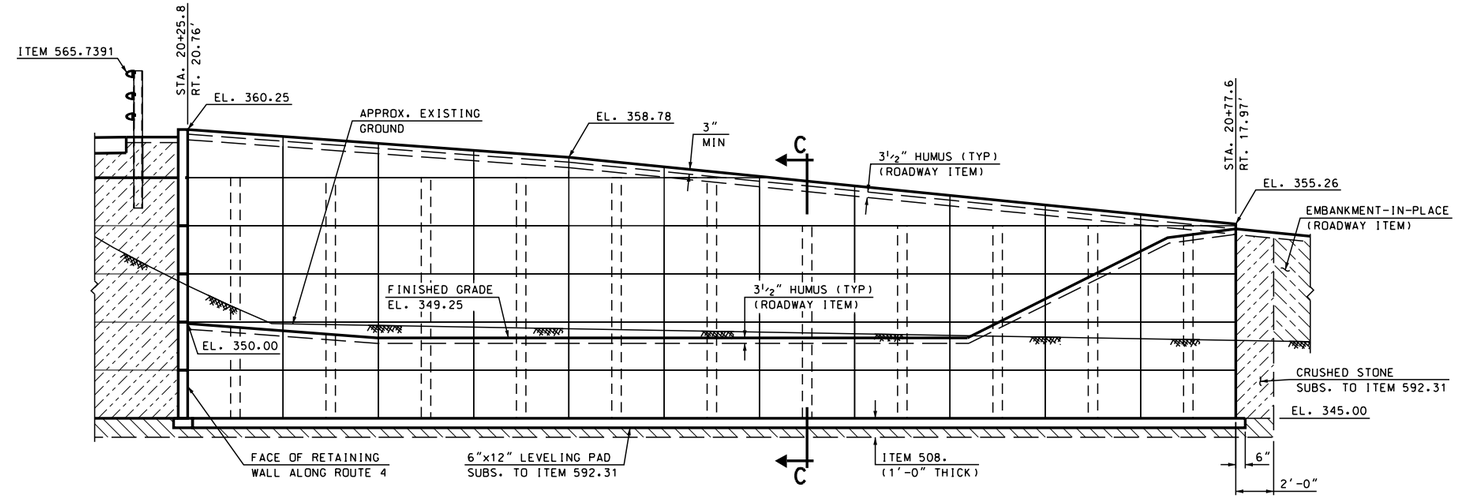

PCM RETAINING WALL ELEVATION ALONG STATELINE SPORTS DRIVE

(3-BAR ALUMINUM RAIL ALONG WALL NOT SHOWN FOR CLARITY)
SCALE: 1/4" = 1'-0"

STATE OF NEW HAMPSHIRE
DEPARTMENT OF TRANSPORTATION * BUREAU OF BRIDGE DESIGN

TOWN LEBANON, NH - HARTFORD, VT BRIDGE NO. STATE PROJECT 14957
LOCATION US ROUTE 4

PCM RETAINING WALL ELEVATIONS AND SECTIONS

BRIDGE SHEET 67 OF 71

REVISIONS AFTER PROPOSAL		BY	DATE		BY	DATE
	DESIGNED	KFD	07/12	CHECKED	MGL	12/12
	DRAWN	SMG	07/12	CHECKED	KFD	08/12
	QUANTITIES	KFD	08/12	CHECKED	PAB	1/13

FILE NUMBER 110-6-1

SUBDIRECTORY	.DGN LOCATOR	SHEET SCALE
BRC/PCMWALL	14957PCMWall	AS NOTED

ISSUE DATE
REV. DATE
FEDERAL PROJECT NO. ----------
SHEET NO. 92
TOTAL SHEETS 157

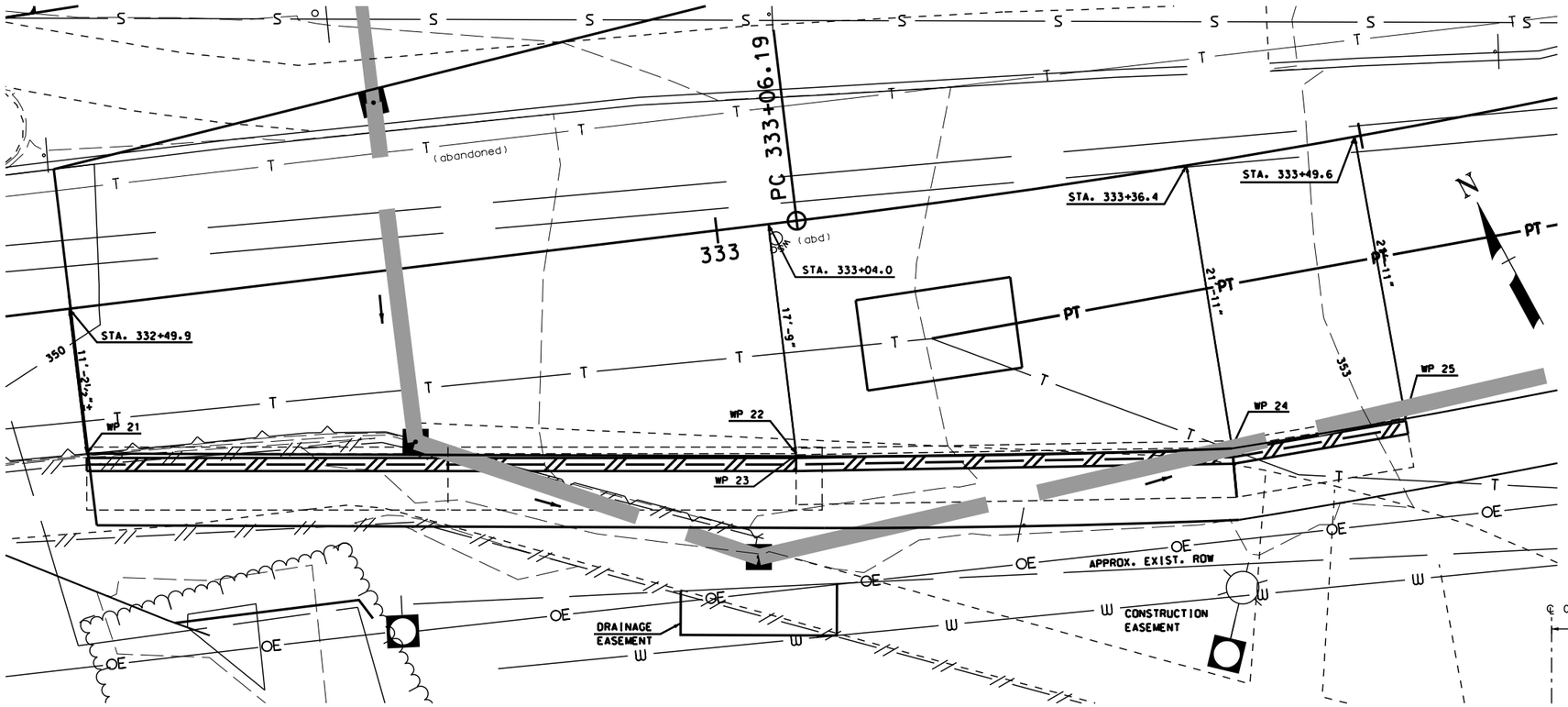

RETAINING WALL SITE PLAN

SCALE: 3/16" = 1'-0"

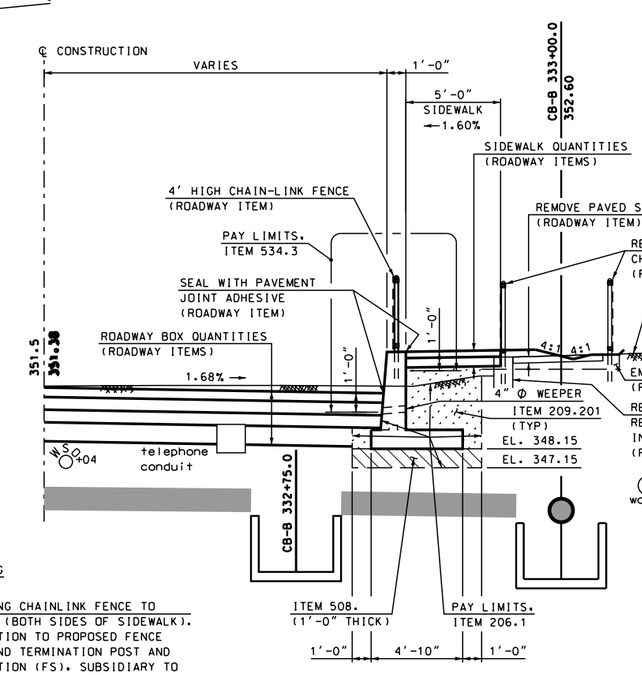

TYPICAL SECTION

(SHOWN AT STA. 333+00)
SCALE: 1/4" = 1'-0"

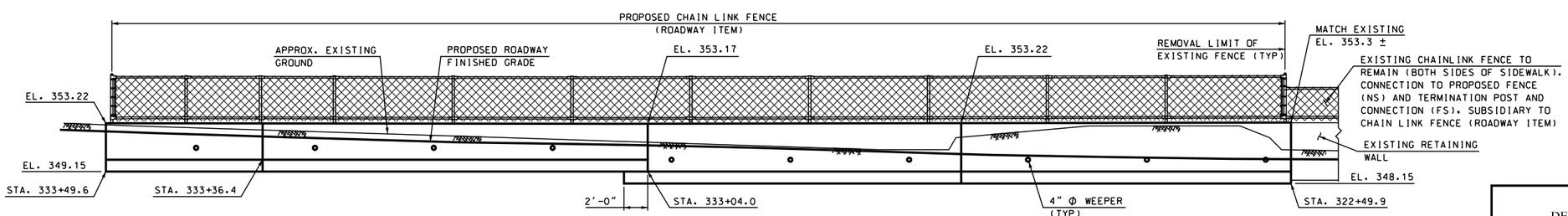

RETAINING WALL ELEVATION VIEW

SCALE: 3/16" = 1'-0"

STATE OF NEW HAMPSHIRE
DEPARTMENT OF TRANSPORTATION * BUREAU OF BRIDGE DESIGN

TOWN LEBANON, NH - HARTFORD, VT BRIDGE NO. STATE PROJECT 14957
LOCATION US ROUTE 4

SIDEWALK RETAINING WALL LAYOUT & SITE PLAN

REVISIONS AFTER PROPOSAL		BY	DATE		BY	DATE
	DESIGNED	WPS	7/12	CHECKED	PAB	2/13
	DRAWN	WPS/SMG	7/12	CHECKED	PAB	2/13
	QUANTITIES	PAB	2/13	CHECKED	WPS	2/13

ISSUE DATE	FEDERAL PROJECT NO.	SHEET NO.	TOTAL SHEETS
REV. DATE	----------	93	157

BRIDGE SHEET 68 OF 71
FILE NUMBER 110-6-1

SUBDIRECTORY	.DGN LOCATOR	SHEET SCALE
BRC/RR RETAINING WALL	14957RRWall	AS NOTED

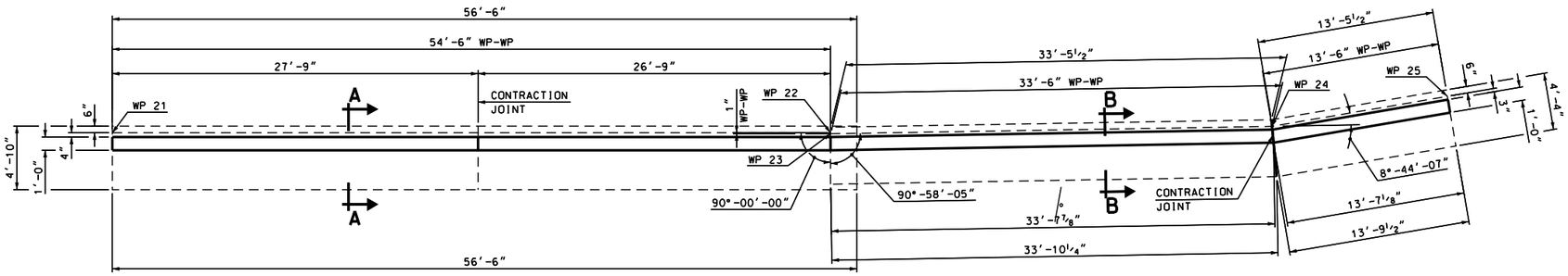

RETAINING WALL MASONRY LAYOUT

SCALE: 3/16" = 1'-0"

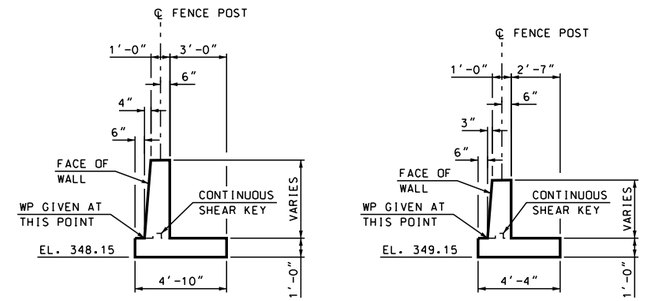

SECTION A-A

SCALE: 1/4" = 1'-0"

SECTION B-B

SCALE: 1/4" = 1'-0"

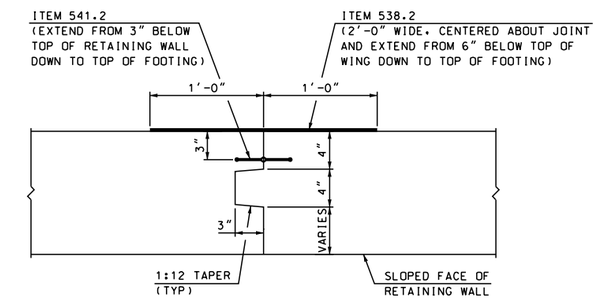

CONTRACTION JOINT DETAIL

SCALE: 1 1/2" = 1'-0"

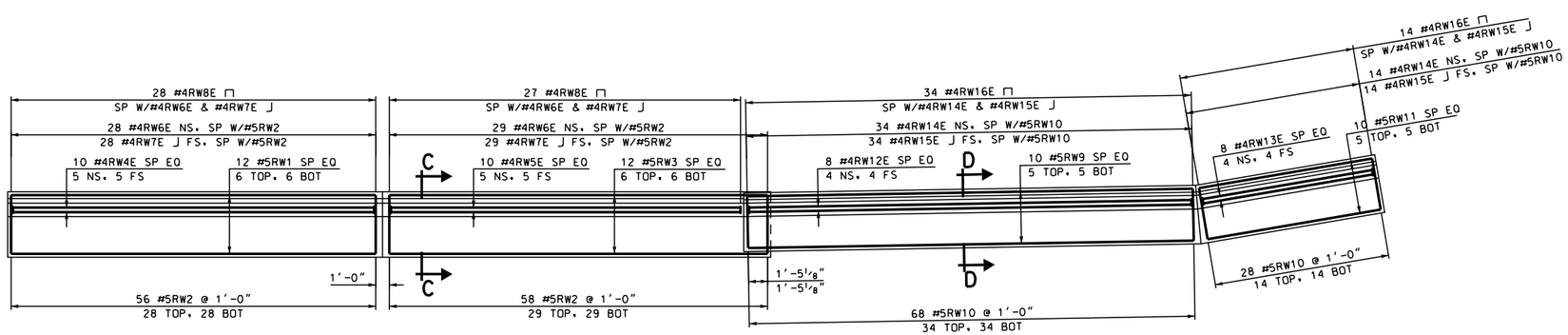

RETAINING WALL REINFORCEMENT PLAN

SCALE: 3/16" = 1'-0"

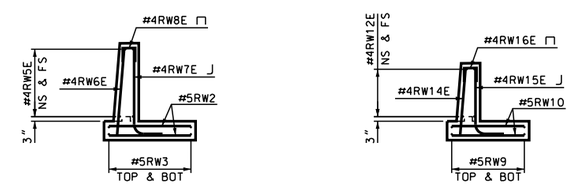

SECTION C-C

SCALE: 1/4" = 1'-0"

SECTION D-D

SCALE: 1/4" = 1'-0"

STATE OF NEW HAMPSHIRE
DEPARTMENT OF TRANSPORTATION * BUREAU OF BRIDGE DESIGN

TOWN LEBANON, NH - HARTFORD, VT BRIDGE NO. STATE PROJECT 14957

LOCATION US ROUTE 4

SIDEWALK RETAINING WALL ELEVATION & DETAILS

BRIDGE SHEET 69 OF 71

REVISIONS AFTER PROPOSAL		BY	DATE		BY	DATE
	DESIGNED	WPS	7/12	CHECKED	PAB	2/13
	DRAWN	WPS/SMG	7/12	CHECKED	PAB	2/13
	QUANTITIES	PAB	2/13	CHECKED	WPS	2/13

FILE NUMBER 110-6-1

SUBDIRECTORY	.DGN LOCATOR	SHEET SCALE	ISSUE DATE	FEDERAL PROJECT NO.	SHEET NO.	TOTAL SHEETS
BRC/RR RETAINING WALL	14957RRWall	AS NOTED	REV. DATE	----------	94	157

REVISIONS AFTER PROPOSAL			
NUMBER	DATE	STATION	STATION	DESCRIPTION

SDR PROCESSED	ARM	DATE	08/11
NEW DESIGN	DEM	DATE	05/13
SHEET CHECKED	TAT	DATE	05/13
AS BUILT DETAILS		DATE	

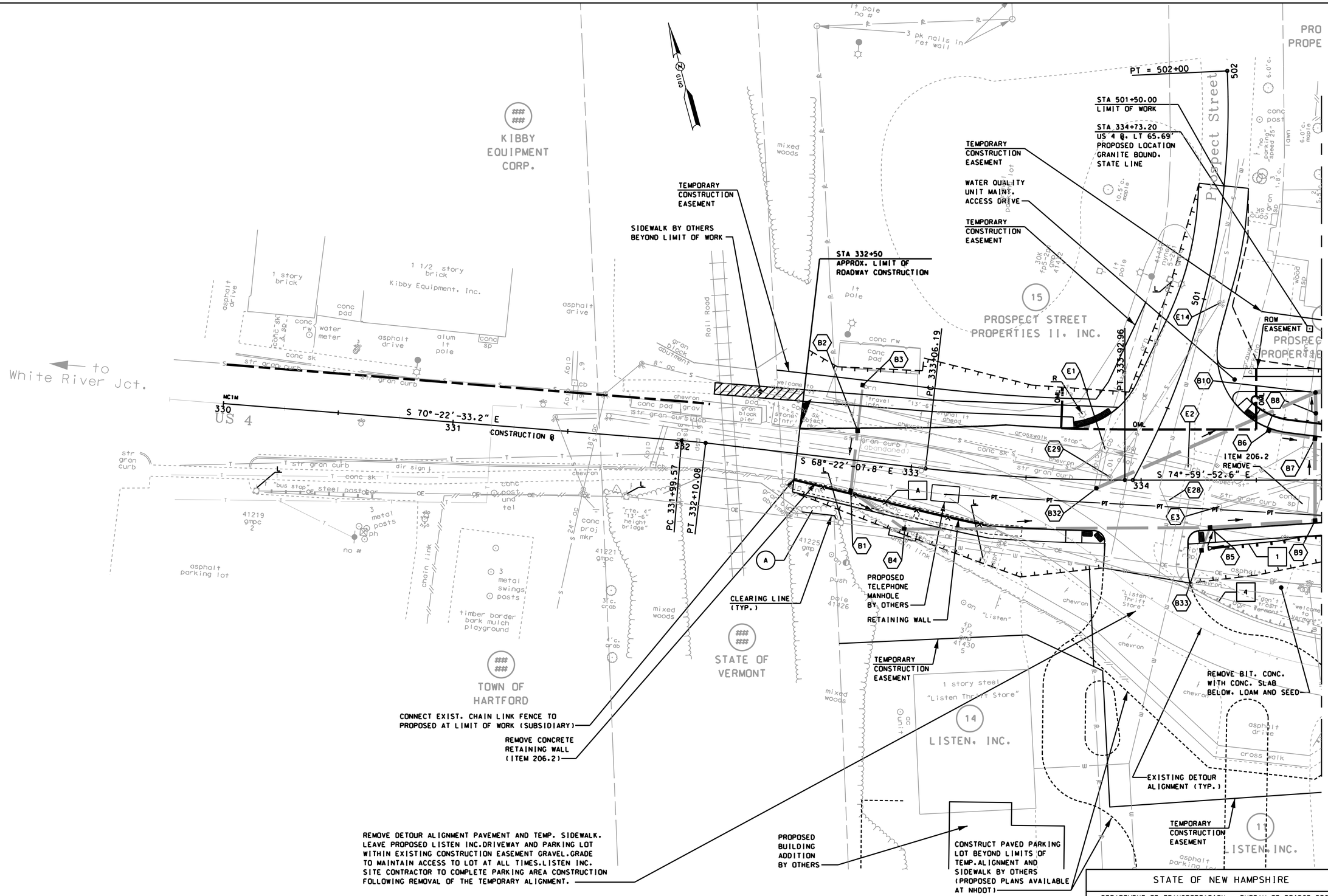

FAY SPOFFORD AND THORNDIKE, LLC

STATE OF NEW HAMPSHIRE

DEPARTMENT OF TRANSPORTATION • BUREAU OF BRIDGE DESIGN

GENERAL PLAN

DGN	STATE PROJECT NO.	SHEET NO.	TOTAL SHEETS
GNP-1	14957	97	157

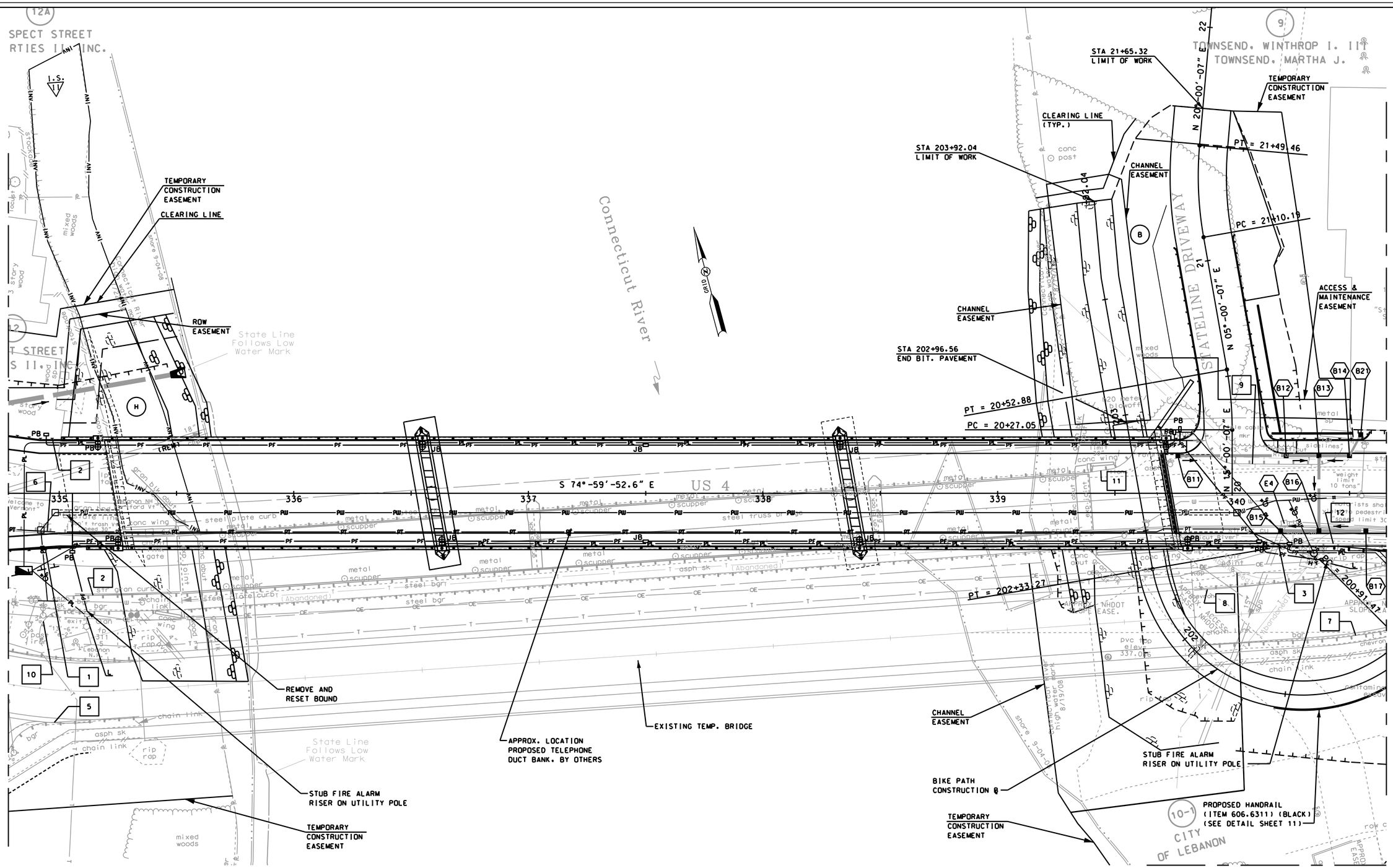

SCALE IN FEET

FAY SPOFFORD AND THORNDIKE, LLC

STATE OF NEW HAMPSHIRE

DEPARTMENT OF TRANSPORTATION • BUREAU OF BRIDGE DESIGN

GENERAL PLAN

DGN	STATE PROJECT NO.	SHEET NO.	TOTAL SHEETS
GNP-2	14957	98	157

REVISIONS AFTER PROPOSAL

NUMBER	DATE	STATION	STATION	DESCRIPTION

SDR PROCCESSED	ARM	DATE 08/11
NEW DESIGN	DEM	DATE 05/13
SHEET CHECKED	TAT	DATE 05/13

AS BUILT DETAILS DATE

REVISIONS AFTER PROPOSAL

NUMBER	DATE	STATION	STATION	DESCRIPTION

		DATE
SDR PROCESSED	ARM	08/11
NEW DESIGN	DEM	05/13
SHEET CHECKED	TAT	05/13
AS BUILT DETAILS		DATE

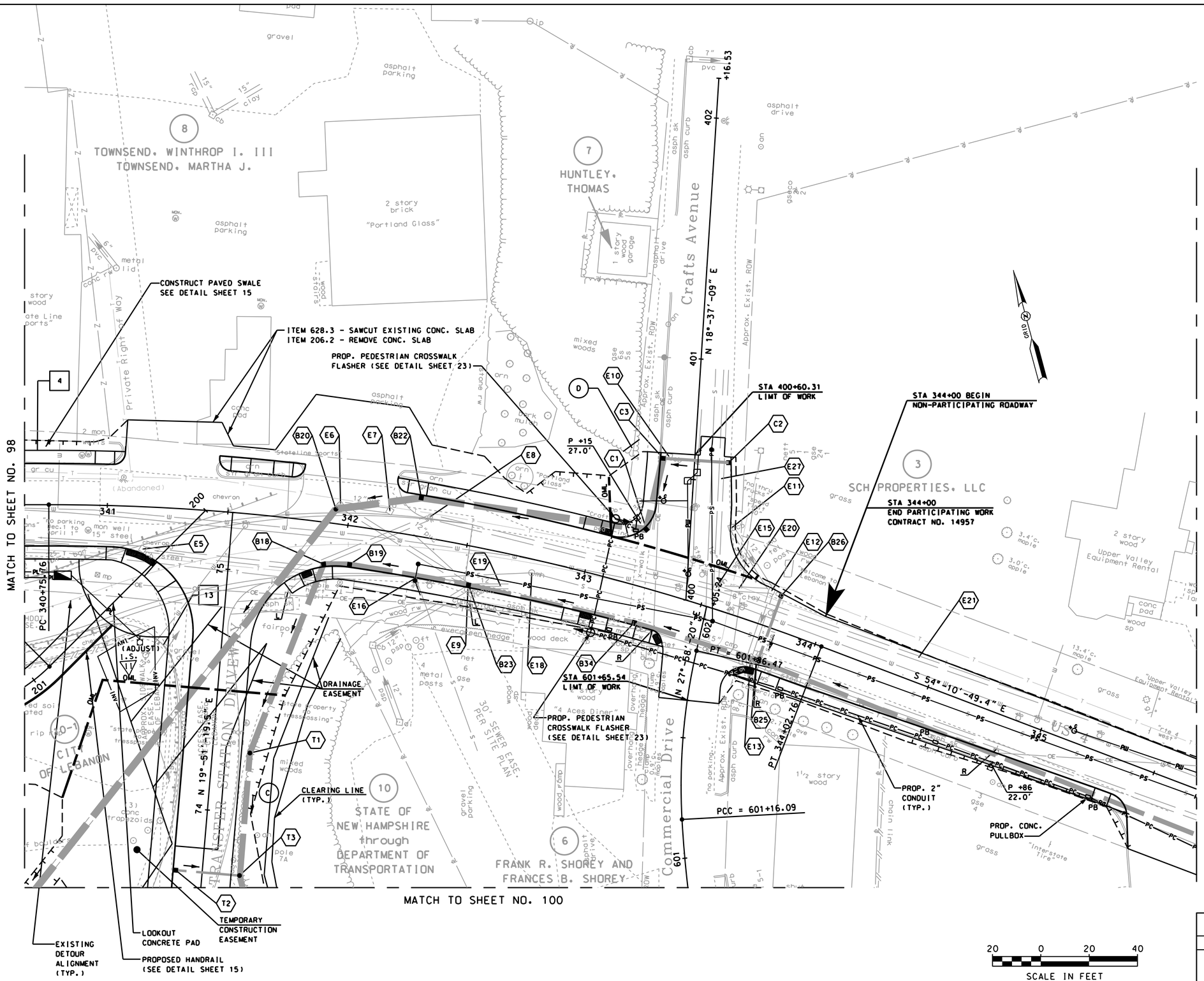

FAY SPOFFORD AND THORNDIKE, LLC

STATE OF NEW HAMPSHIRE

DEPARTMENT OF TRANSPORTATION • BUREAU OF BRIDGE DESIGN

GENERAL PLAN

DGN	STATE PROJECT NO.	SHEET NO.	TOTAL SHEETS
GNP-3	14957	99	157

MATCH TO SHEET NO. 98

MATCH TO SHEET NO. 99

mixed woods

4:1

DRAINAGE EASEMENT

edge of pavement

C

PT = 73+34.57

DRAINAGE EASEMENT

asphalt drive

DRAINAGE EASEMENT

73

mixed woods

PC = 72+71.73

CLEARING LINE (TYP.)

SIDEWALK ALONG EAST SIDE OF LEBANON

G

T4

N 7°-51'-8.9" E

DRAINAGE EASEMENT

10' CLF GATE 5' HIGH

APPROX. ACCESS EASEMENT

mon well

REMOVE CONC. SLAB

PT = 72+08.25

TEMPORARY CONSTRUCTION EASEMENT

10-1

CITY OF LEBANON

72

MICROPOOL EXTENDED DETENTION POND (REFER TO SHT. NO. 12 FOR POND GRADING DETAILS)

B

REMOVE CONC. PAD

PC = 71+88.57

F

Connecticut River

DRAINAGE EASEMENT

DRAINAGE EASEMENT

E

T5

10

STATE OF NEW HAMPSHIRE through DEPARTMENT OF TRANSPORTATION

N 18°-45'-44.0" W

asphalt drive

TRANSFER STATION DRIVEWAY

STA 71+00 APPROX. LIMIT OF ROADWAY CONSTRUCTION

CONSTRUCTION ℄ 70

REVOC. TRUST
SHOREY, STEVEN F.
SHOREY, JUDITH A.

Approx. Exist.

Commercial Drive

1 story

5

SCH PROPERTIES, LLC

asphalt parking

1 story concrete block "Interstate Tire Co."

4

INTERSTATE TIRE COMPANY, INC.

asph drive

GRID N

mixed woods

20 0 20 40

SCALE IN FEET

FAY SPOFFORD AND THORNDIKE, LLC

STATE OF NEW HAMPSHIRE

DEPARTMENT OF TRANSPORTATION • BUREAU OF BRIDGE DESIGN

GENERAL PLAN

DGN	STATE PROJECT NO.	SHEET NO.	TOTAL SHEETS
GNP-4	14957	100	157

REVISIONS AFTER PROPOSAL

NUMBER	DATE	STATION	STATION	DESCRIPTION

SDR PROCESSED	ARM	DATE 08/11
NEW DESIGN	DEM	DATE 05/13
SHEET CHECKED	TAT	DATE 05/13
AS BUILT DETAILS		DATE

REVISIONS AFTER PROPOSAL

NUMBER	DATE	STATION	STATION	DESCRIPTION

SDR PROCESSED	ARM	DATE 08/11
NEW DESIGN	DEM	DATE 05/13
SHEET CHECKED	TAT	DATE 05/13
AS BUILT DETAILS		DATE

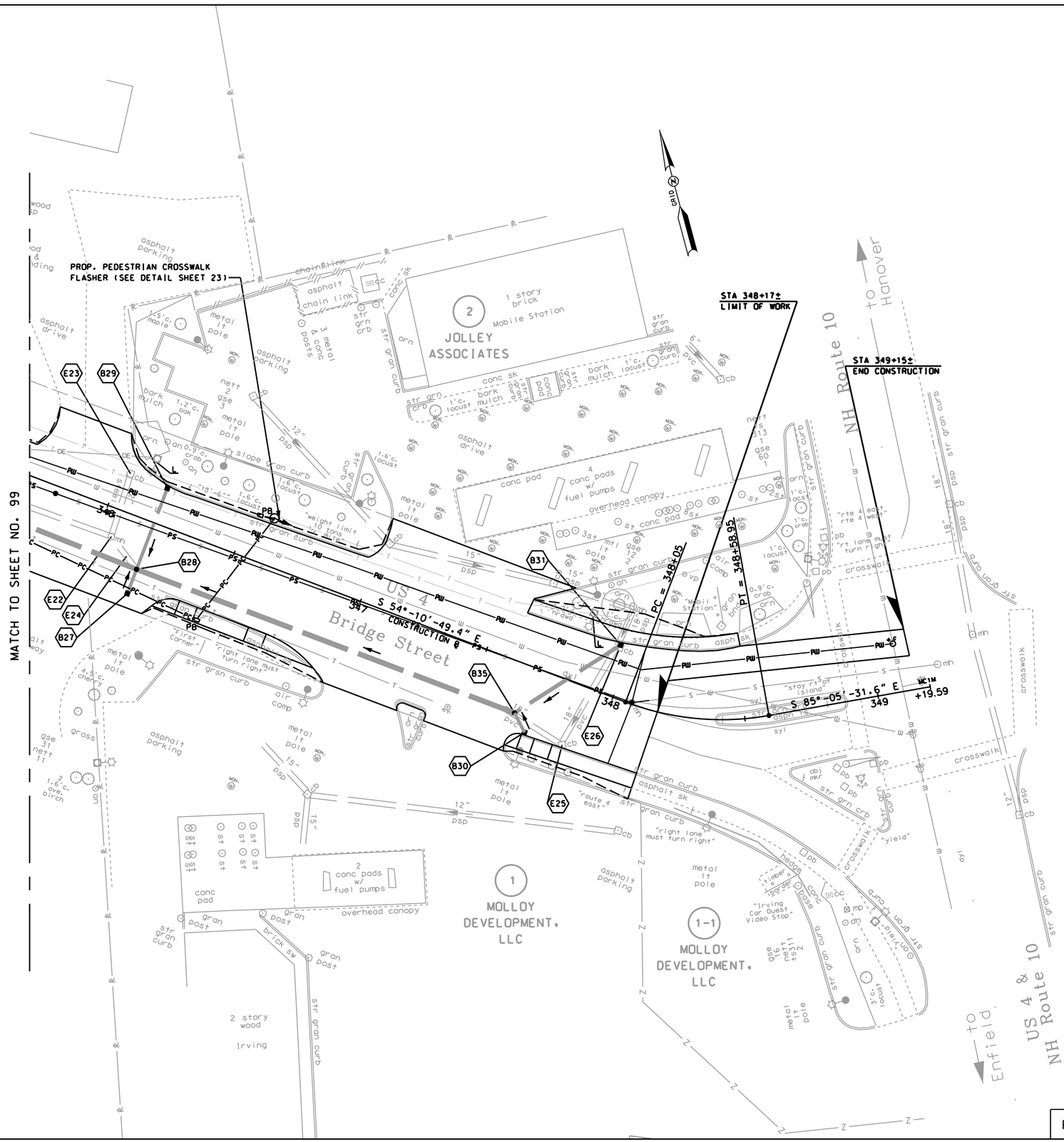

20 0 20 40
SCALE IN FEET

FAY SPOFFORD AND THORNDIKE, LLC

STATE OF NEW HAMPSHIRE

DEPARTMENT OF TRANSPORTATION • BUREAU OF BRIDGE DESIGN

GENERAL PLAN

DGN	STATE PROJECT NO.	SHEET NO.	TOTAL SHEETS
GNP-3	14957	101	157

US 4 ℄:

B1
STA 333+00.0. RT 27.2' TO STA 332+75.0. RT 13.3'
CONSTRUCT 25' x 15" RCP
CONSTRUCT CB-B. ECCENTRIC CONE @ +75.0. RT 13.3'
15" INV. OUT = 344.65
15" INV. IN = 344.80
GRATE ELEV. = 350.41

B2
STA 332+75.0. RT 13.3' TO STA 332+75.0. LT 12.9'
CONSTRUCT 23' x 15" RCP
CONSTRUCT CB-B @ +75.0. LT 12.9'
15" INV. OUT = 345.00
12" INV. IN (N) = 347.21
GRATE ELEV. = 350.22

B3
STA 332+75.0. LT 12.9' TO STA 332+75.0. LT 32.8'
CONSTRUCT 16' x 12" PLASTIC PIPE (SMOOTH INTERIOR)
CONSTRUCT CB-B @ +75.0. LT 32.8'
12" INV. OUT = 348.14
GRATE ELEV. = 351.27

B4
STA 334+30.0. RT 20.7' TO STA 333+00.0. RT 27.2'
CONSTRUCT 128' x 15" RCP
CORE 22" OPENING IN RETAINING WALL TO ACCOMMODATE 15" RCP
(SUBSIDIARY)
INSTALL RIGID TRENCH INSULATION BETWEEN WATER MAIN AND CB B4
(SUBSIDIARY)
CONSTRUCT SLAB TOP CB-B @ +00.0. RT 27.2'
15" INV. OUT = 344.27
15" INV. IN = 344.52
GRATE ELEV. = 352.54

B5
STA 334+75.6. RT 17.6' TO STA 334+30.0. RT 20.7'
CONSTRUCT 42' x 18" RCP
CONSTRUCT CB-F @ +30.0. RT 20.7'
18" INV. OUT = 343.38
15" INV. IN (W) = 343.63
12" INV. IN (S) = 350.98
GRATE ELEV. = 354.99

B6
STA 334+75.6. LT 18.0' TO STA 334+55.4. LT 21.5'
CONSTRUCT 17' x 15" RCP
CONSTRUCT CB-F @ +55.4. LT 21.5'
15" INV. OUT = 343.55
GRATE ELEV. = 355.77

B7
STA 334+75.6. LT 29.0' TO STA 334+75.6. LT 18.0'
CONSTRUCT 7' x 18" PLASTIC PIPE (SMOOTH INTERIOR)
CONSTRUCT CB-F @ +75.6. LT 18.0'
18" INV. OUT = 342.15
18" INV. IN (S) = 342.40
15" INV. IN (W) = 343.01
GRATE ELEV. = 356.49

B8
STA 334+75.6. LT 38.0' TO STA 334+75.6. LT 29.0'
CONSTRUCT 5' x 18" PLASTIC PIPE (SMOOTH INTERIOR)
CONSTRUCT WOU @ +75.6. LT 29.0'
18" INV. OUT = 341.77
18" INV. IN = 342.02
GRATE ELEV. = 357.04

B9
STA 334+75.6. LT 18.0' TO STA 334+75.6. RT 17.6'
CONSTRUCT 32' x 18" RCP
CONSTRUCT CB-F @ +75.6. RT 17.6'
18" INV. OUT = 342.75
18" INV. IN = 343.00
GRATE ELEV. = 356.49

B10
STA 335+47.6. LT 50.5' TO STA 334+75.6. LT 38.0'
CONSTRUCT 73' x 24" CORR. POLYETHYL PIPE FOR SLOPE DRAINAGE
CONSTRUCT 24" ALUMINIZED STEEL END SECTION @ +47.6. LT 50.5'
INV. @ PIPE = 326.50
CONSTRUCT 6' DIA. DMH @ +75.6. LT 38.0'
24" INV. OUT = 341.40
18" INV. IN (S) = 341.65
18" INV. IN (W) = 342.19
GRATE ELEV. = 356.21

B11
STA 340+23.0. LT 16.0' TO STA 339+77.0. LT 16.0'
CONSTRUCT 44' x 15" RCP
CONSTRUCT DI-B @ +77.0. LT 16.0'
15" INV. OUT = 355.15
GRATE ELEV. = 360.00

B12
STA 340+37.0. LT 16.0' TO STA 340+23.0. LT 16.0'
CONSTRUCT 10' x 15" RCP
CONSTRUCT CB-B @ +23.0. LT 16.0'
15" INV. OUT = 354.61
15" INV. IN = 354.86
GRATE ELEV. = 359.18

US 4 ℄:

B13
STA 340+37.0. RT 16.0' TO STA 340+37.0. LT 16.0'
CONSTRUCT 28' x 15" RCP
CONSTRUCT CB-B @ +37.0. LT 16.0'
15" INV. OUT = 354.30
15" INV. IN (E) = 354.55
15" INV. IN (W) = 354.55
GRATE ELEV. = 359.15

B14
STA 340+37.0. LT 16.0' TO STA 340+50.0. LT 16.0'
CONSTRUCT 9' x 15" RCP
CONSTRUCT CB-B @ +50.0. LT 16.0'
15" INV. OUT = 354.65
12" INV. IN = 354.90
GRATE ELEV. = 359.34

B15
STA 340+21.0. RT 16.0'
CONSTRUCT CB-B. ECCENTRIC CONE @ +21.0. RT 16.0'
CONNECT EXIST. PIPE (SUBSIDIARY)
CONSTRUCT CLASS C STONE FILL AT PIPE OUTLET
(SEE DETAIL SHT. NO. XX)
EXIST. 15" INV. OUT = 351.62
15" INV. IN = 351.87
GRATE ELEV. = 359.19

B16
STA 340+21.0. RT 16.0' TO STA 340+37.0. RT 16.0'
CONSTRUCT 12' x 15" RCP
CONSTRUCT CB-B. ECCENTRIC CONE @ +37.0. RT 16.0'
15" INV. OUT = 351.99
15" INV. IN (N) = 354.12
15" INV. IN (E) = 353.50
GRATE ELEV. = 359.15

B17
STA 340+37.0. RT 16.0' TO STA 340+57.0. RT 16.0'
CONSTRUCT 16' x 15" RCP
CONSTRUCT CB-B. ECCENTRIC CONE @ +57.0. RT 16.0'
15" INV. OUT = 353.89
GRATE ELEV. = 359.21

B18
STA 74+25.0. RT 15.5' TRANS. ST. DRIVE ℄ TO STA 341+92.1. RT 17.3'
CONSTRUCT 79' x 30" PLASTIC PIPE (SMOOTH INTERIOR)
CONSTRUCT 5' DIA. CB-F @ +92.1. RT 17.3'
30" INV. OUT = 352.76
30" INV. IN = 353.01
GRATE ELEV. = 362.36

B19
STA 341+92.1. RT 17.3' TO STA 342+03.0. RT 16.0'
CONSTRUCT 6' x 30" RCP
CONSTRUCT 5' DIA. CB-F @ +03.0. RT 16.0'
30" INV. OUT = 353.19
30" INV. IN = 353.44
GRATE ELEV. = 362.86

B20
STA 74+08.5. LT 113.5' TRANSFER STA. DR. ℄ TO STA 341+94.3. LT 6.0'
CONSTRUCT 275' x 36" PLASTIC PIPE (SMOOTH INTERIOR)
CONSTRUCT 36" ALUMINIZED STEEL END SECTION @ +08.5. LT 113.5'
INV. @ PIPE = 330.94
CONSTRUCT CLASS B STONE FILL AT PIPE OUTLET
(SEE DETAIL SHT. NO. XX)
CONSTRUCT 5' DIA. DMH @ +94.3 LT 6.0'
36" INV. OUT = 352.65
36" INV. IN = 354.50
GRATE ELEV. = 362.86

B21
STA 340+50.0. LT 16.0' TO STA 340+55.0. LT 25.0'
CONSTRUCT 8' x 12" PLASTIC PIPE (SMOOTH INTERIOR)
CONSTRUCT DI-B @ +55.0. LT 25.0'
12" INV. OUT = 355.00
GRATE ELEV. =

B22
STA 342+28.0. LT 6.0' TO STA 342+28.0. LT 16.0'
CONSTRUCT 35' x 36" PLASTIC PIPE (SMOOTH INTERIOR)
CONSTRUCT 5' DIA. CB-F @ +28.0. LT 16.0'
36" INV. OUT = 355.50
36" INV. IN = 357.18
GRATE ELEV. = 364.39

B23
STA 342+03.0. RT 16.0' TO STA 342+53.9. RT 16.0'
CONSTRUCT 46' x 30" RCP
CONSTRUCT 5' DIA CB-F @ +53.9. RT 16.0'
CONNECT EXIST. PIPE (SUBSIDIARY)
30" INV. OUT = 354.82
24" INV. IN (E) = 358.09
EXIST. 12" INV. IN (S) = 361.73
GRATE ELEV. = 365.49

B24 NOT USED

US 4 ℄:

B25
STA 343+25.0. RT 15.0' TO STA 343+80.0. RT 14.4'
CONSTRUCT 50' x 24" PLASTIC PIPE (CORR. INTERIOR)
CONSTRUCT ECCENTRIC CONE CB-F @ +80.0. RT 14.4'
CONNECT EXIST 6" PVC (SUBSIDIARY)
24" INV. OUT = 367.00
24" INV. IN (E) = 368.25
15" INV. IN (N) = 369.00
GRATE ELEV. = 374.85

B26
STA 343+80.0. RT 14.4' TO STA 343+80.0. LT 14.0'
CONSTRUCT 25' x 15" RCP
CONSTRUCT CB-F @ +80.0. LT 14.0'
15" INV. OUT = 369.49
GRATE ELEV. = 374.81

B27
STA 346+18.3. RT 18.4' TO STA 346+18.3. RT 28.0'
CONSTRUCT 5' x 15" PLASTIC PIPE (SMOOTH INTERIOR)
CONSTRUCT CB-F @ +18.3. RT 28.0'
15" INV. OUT = 388.25
GRATE ELEV. = 393.01

B28
STA 343+80.0. RT 14.4' TO STA 346+18.3. RT 18.4'
CONSTRUCT 234' x 24" PLASTIC PIPE (CORR. INTERIOR)
CONSTRUCT 6' DIA. DMH @ +18.3. RT 18.4''
CONNECT EXIST. PIPE (SUBSIDIARY)
24" INV. OUT = 384.50
15" INV. IN (N) = 388.75
24" INV. IN (E) = 384.70
15" INV. IN (W) = 388.15
EXIST. 15" INV. IN (S) = 388.15
GRATE ELEV. = 393.13

B29
STA 346+18.3. RT 18.4' TO STA 346+18.3. LT 13.7'
CONSTRUCT 28' x 15" RCP
CONSTRUCT CB-F @ +18.3. LT 13.7'
15" INV. OUT = 389.07
GRATE ELEV. = 393.39

B30
STA 347+68.0. RT 18.4' TO STA 347+74.0. RT 23.8'
CONSTRUCT 4' x 15" RCP
CONSTRUCT CB-B @ +74.0. RT 23.8'
15" INV. OUT = 392.27
GRATE ELEV. = 397.59

B31
STA 347+68.0. RT 18.4' TO STA 347+95.8. LT 19.1'
CONSTRUCT 43' x 18" RCP
CONSTRUCT CB-B @ +95.8. LT 19.1'
CONNECT EXIST. PIPE (SUBSIDIARY)
18" INV. OUT = 391.65
EXIST. 18" INV. IN = 391.90
GRATE ELEV. = 397.95

B32
STA 334+75.6. LT 38.0' TO STA 333+80.7. RT 3.6'
CONSTRUCT 100' x 18" RCP
CONSTRUCT DMH @ +80.7. RT 3.6'
INSTALL RIGID TRENCH INSULATION BETWEEN 18" RCP AND SMH E29
(SUBSIDIARY)
CONNECT EXIST. PIPE (SUBSIDIARY)
18" INV. OUT = 344.56
EXIST. 15" INV. IN = 344.81
GRATE ELEV. = 353.76

B33
STA 334+30.0. RT 20.7' TO STA 334+26.2. RT 30.5'
CONSTRUCT 7' x 12" PLASTIC PIPE (SMOOTH INTERIOR)
CONSTRUCT CB-F @ +26.2. RT 30.5'
12" INV. OUT = 351.15
GRATE ELEV. = 355.28

B34
STA 342+53.9. RT 16.0' TO STA 343+25.0. RT 15.0'
CONSTRUCT 66' x 24" PLASTIC PIPE (CORR. INTERIOR)
CONSTRUCT CB-F @ +25.0. RT 15.0'
24" INV. OUT = 361.63
24" INV. IN = 364.29
GRATE ELEV. = 370.36

B35
STA 346+18.3. RT 18.4' TO STA 347+68.0. RT 18.4'
CONSTRUCT 146' x 24" PLASTIC PIPE (CORR. INTERIOR)
CONSTRUCT 5' DIA. DMH @ +68.0. RT 18.4'
24" INV. OUT = 390.70
18" INV. IN (E) = 391.20
15" INV. IN (S) = 392.15
GRATE ELEV. = 397.56

TRANSFER STATION DRIVEWAY ℄:

T1
STA 73+74.0. RT 15.5' TO STA 74+25.0. RT 15.5'
CONSTRUCT 46' x 30" PLASTIC PIPE (SMOOTH INTERIOR)
CONSTRUCT 5' DIA. DMH @ +25.0. RT 15.5'
30" INV. OUT = 347.45
30" INV. IN = 350.39
GRATE ELEV. = 355.43

T2
STA 73+74.0. RT 15.5' TO STA 73+74.0. LT 11.0'
CONSTRUCT 22' x 12" PLASTIC PIPE (SMOOTH INTERIOR)
CONSTRUCT CB-F @ +74.0. LT 11.0'
12" INV. OUT = 347.80
GRATE ELEV. = 352.39

T3
STA 73+19.0. RT 34.0' TO STA 73+74.0. RT 15.5'
CONSTRUCT 54' x 30" PLASTIC PIPE (SMOOTH INTERIOR)
CONSTRUCT 30" ALUMINIZED STEEL END SECTION @ +19.0. RT 34.0'
INV. @ PIPE = 342.00
CONSTRUCT CLASS B STONE FILL AT PIPE OUTLET
(SEE DETAIL SHT. NO. 8)
CONSTRUCT 5' DIA. DMH @ +74.0. RT 15.5'
30" INV. OUT = 344.00
30" INV. IN (N) = 346.00
12" INV. IN (W) = 347.50
GRATE ELEV. = 351.85

T4
STA 72+51.4. RT 27.7' TO STA 72+51.4. LT 11.0'
CONSTRUCT 37' x 12" PLASTIC PIPE (SMOOTH INTERIOR)
CONSTRUCT 12" ALUMINIZED STEEL END SECTION @ +51.4. RT 27.7'
INV. @ PIPE = 342.00
CONSTRUCT CLASS C STONE FILL AT PIPE OUTLET
(SEE DETAIL SHT. NO. 8)
CONSTRUCT CB-B @ +51.4. LT 11.0'
12" INV. OUT = 343.00
GRATE ELEV. = 347.05

T5
STA 71+50.0. LT 56.1' TO STA 71+50.0. RT 50.0'
CONSTRUCT 104' x 30" RCP
CONSTRUCT 30" RC END SECTION @ +50.0. LT 56.1'
INV. @ PIPE = 337.00
CONSTRUCT CLASS B STONE FILL AT PIPE OUTLET
(SEE DETAIL SHT. NO. 8)
CONSTRUCT OUTLET CONTROL STRUCTURE @ +50.0. RT 50.0'
(SEE DETAIL SHEET 8)
15" INV. OUT = 339.00
GRATE ELEV. = 344.40

CRAFTS AVENUE ℄:

C1
STA 342+28.0. LT 16.0' US 4 ℄ TO STA 400+28.0. LT 18.2'
CONSTRUCT 89' x 36" PLASTIC PIPE (SMOOTH INTERIOR)
CONSTRUCT 6' DIA. CB-F @ +28.0. LT 18.2'
36" INV. OUT = 361.00
36" INV. IN = 362.40
GRATE ELEV. = 371.85

C2
STA 400+58.0. LT 13.1' TO STA 400+58.0. RT 14.1'
CONSTRUCT 25' x 15" RCP
CONNECT EXIST. 12" PVC (SUBSIDIARY)
CONSTRUCT 5' CB-F. ECCENTRIC CONE @ +58.0. RT 14.1'
EXIST. 12" INV. IN = UNKNOWN
15" INV. OUT = 364.68
GRATE ELEV. = 373.94

C3
STA 400+28.0. LT 18.2' TO STA 400+58.0. LT 13.1'
CONSTRUCT 28' x 36" PLASTIC PIPE (SMOOTH INTERIOR)
CONSTRUCT 5' CB-F @ +58.0. LT 13.1'
15" INV. IN = 364.43
36" INV. OUT = 362.68
GRATE ELEV. = 373.96

REVISIONS AFTER PROPOSAL			
NUMBER	DATE	STATION	DESCRIPTION

SDR PROCESSED	ARM	DATE 08/11
NEW DESIGN	DEM	DATE 05/13
SHEET CHECKED	TAT	DATE 05/13
AS BUILT DETAILS		DATE

STATE OF NEW HAMPSHIRE

DEPARTMENT OF TRANSPORTATION ∘ BUREAU OF BRIDGE DESIGN

DRAINAGE NOTES

DGN	STATE PROJECT NO.	SHEET NO.	TOTAL SHEETS
	14957	102	157

FAY SPOFFORD AND THORNDIKE, LLC

US 4 @:

E1 STA 333+81.7, RT 4.9' TO STA 333+84.2, LT 13.2'
REMOVE 17' x 10" CLAY
REMOVE CB @ +84.2, LT 13.2'

E2 STA 333+84.2, LT 13.2' TO STA 334+20.4, LT 5.5'
REMOVE 33' x 10" CLAY
REMOVE CB @ +20.4, LT 5.5'

E3 STA 335+63.1, LT 26.6' TO STA 334+34.0, RT 11.5'
REMOVE 135' x 18" CMP
REMOVE DMH @ +34.0, RT 11.5' (EXACT LOCATION UNKNOWN)
ITEM 206.19 - COMMON STRUCTURE EXCAVATION EXPLORATORY

E4 STA 340+21.0, RT 16.0' TO STA 340+22.2, RT 12.9'
REMOVE 4' x 15" SPP
REMOVE CB @ +22.2, RT 12.9'

E5 STA 340+22.2, RT 12.9' TO STA 341+15.4, RT 17.5'
REMOVE 89' x 15" STEEL PIPE
REMOVE CB @ +15.4, RT 17.5'

E6 STA 73+08.5, LT 113.5' TRANSFER STA. DR. @ TO STA 341+95.7, LT 8.3'
REMOVE 278' x 18" CMP (SUBSIDIARY TO NOTE B20)
REMOVE DMH @ +95.7, LT 8.3' (SUBSIDIARY TO NOTE B20)

E7 STA 341+95.7, LT 8.3' TO STA 342+16.2, LT 8.4'
REMOVE 17' x 12" PVC (SUBSIDIARY TO NOTE B22)
REMOVE CB @ +16.2, LT 8.4' (SUBSIDIARY TO NOTE B22)

E8 STA 341+15.4, RT 17.5' TO STA 342+33.0, LT 8.8'
REMOVE 120' X 15" STEEL PIPE
REMOVE DMH @ +33.0, LT 8.8'

E9 STA 341+95.7, LT 8.3' TO STA 342+53.9, RT 17.6'
REMOVE 60' OF PIPE
REMOVE CB @ +53.9, RT 17.6' (SUBSIDIARY TO NOTE B23)

E12 STA 343+76.6, RT 14.4' TO STA 343+75.8, LT 14.7'
REMOVE 25' x 12" STEEL PIPE
REMOVE CB @ +75.8, LT 14.7'

E13 STA 343+51.9, RT 14.6' TO STA 343+76.6, RT 14.4'
REMOVE 60' x 15" CMP (LOCATION OF END OF PIPE UNKNOWN)
REMOVE CB @ +76.6, RT 14.4'

E15 STA 342+33.0, LT 8.8' TO STA 343+53.8, LT 8.6'
REMOVE 120' OF PIPE
REMOVE DMH @ +53.8, LT 8.6'

E16 STA 342+31.4, RT 17.2'
REMOVE SMH

E17 NOT USED

E18 STA 342+78.7, RT 5.6'
REMOVE SMH

E19 STA 342+53.9, RT 17.6' TO STA 342+70.4, RT 13.2
REMOVE 65' x 12" PVC (LOCATION OF END OF PIPE UNKNOWN)

E20 STA 343+53.8, LT 8.6' TO STA 343+75.8, LT 14.7'
REMOVE 19' x 8" CLAY

E21 STA 343+53.8, LT 8.6' TO STA 345+25.7, LT 12.0'
REMOVE 210' OF PIPE (LOCATION OF END OF PIPE UNKNOWN)

E22 STA 343+76.6, RT 14.4' TO STA 346+05.3, RT 10.4'
REMOVE 225' x 12" STEEL PIPE
REMOVE DMH @ +05.3, RT 10.4'

E23 STA 346+05.3, RT 10.4' TO STA 346+03.7, LT 13.9'
REMOVE 21' x 12" STEEL PIPE
REMOVE CB @ +03.7, LT 13.9'

E24 STA 346+05.3, RT 10.4' TO STA 346+18.3, RT 18.4'
REMOVE 14' x 15" PSP

E25 STA 347+63.6, RT 18.1' TO STA 347+88.7, RT 23.2'
REMOVE 24' x 18" PVC (LOCATION OF END OF PIPE UNKNOWN
REMOVE CB @ +88.7, RT 23.2'

E26 STA 347+88.7, RT 23.2' TO STA 347+95.8, LT 18.2'
REMOVE 38' x 18" PVC
REMOVE CB @ +95.8, LT 18.2' (SUBSIDIARY TO NOTE B31)

US 4 @:

E27 STA 400+58.0, RT 12.0' CRAFTS AVE. @ TO STA 343+53.8, LT 8.6'
REMOVE 52' OF 12" PVC PIPE

E28 STA 334+34.0, RT 11.5' TO STA 333+81.7, RT 4.9'
REMOVE 54' x 15" CLAY PIPE

E29 STA 342+86.43, LT 1.34'
RECONSTRUCT BURIED SMH

PROSPECT STREET @:

E14 STA 501+00.1, RT 7.1'
ADJUST SMH
COVER ELEV. = 354.71

CRAFTS AVENUE @:

E10 STA 400+58.8, LT 11.0' TO STA 400+58.8, LT 10.7'
REMOVE 19' OF PIPE
REMOVE CB @ +58.8, LT 10.7' (SUBSIDIARY TO NOTE C3)

E11 STA 343+75.8, LT 14.7' TO STA 400+31.0, RT 17.0'
REMOVE 27' x 12" STEEL PIPE
REMOVE CB @ +31.0, RT 17.0'

REVISIONS AFTER PROPOSAL

NUMBER	DATE	STATION	STATION	DESCRIPTION

SDR PROCESSED	ARM	DATE 08/11
NEW DESIGN	DEM	DATE 05/13
SHEET CHECKED	TAT	DATE 05/13
AS BUILT DETAILS		DATE

FAY SPOFFORD AND THORNDIKE, LLC

STATE OF NEW HAMPSHIRE

DEPARTMENT OF TRANSPORTATION • BUREAU OF BRIDGE DESIGN

DRAINAGE NOTES

DGN	STATE PROJECT NO.	SHEET NO.	TOTAL SHEETS
	14957	103	157

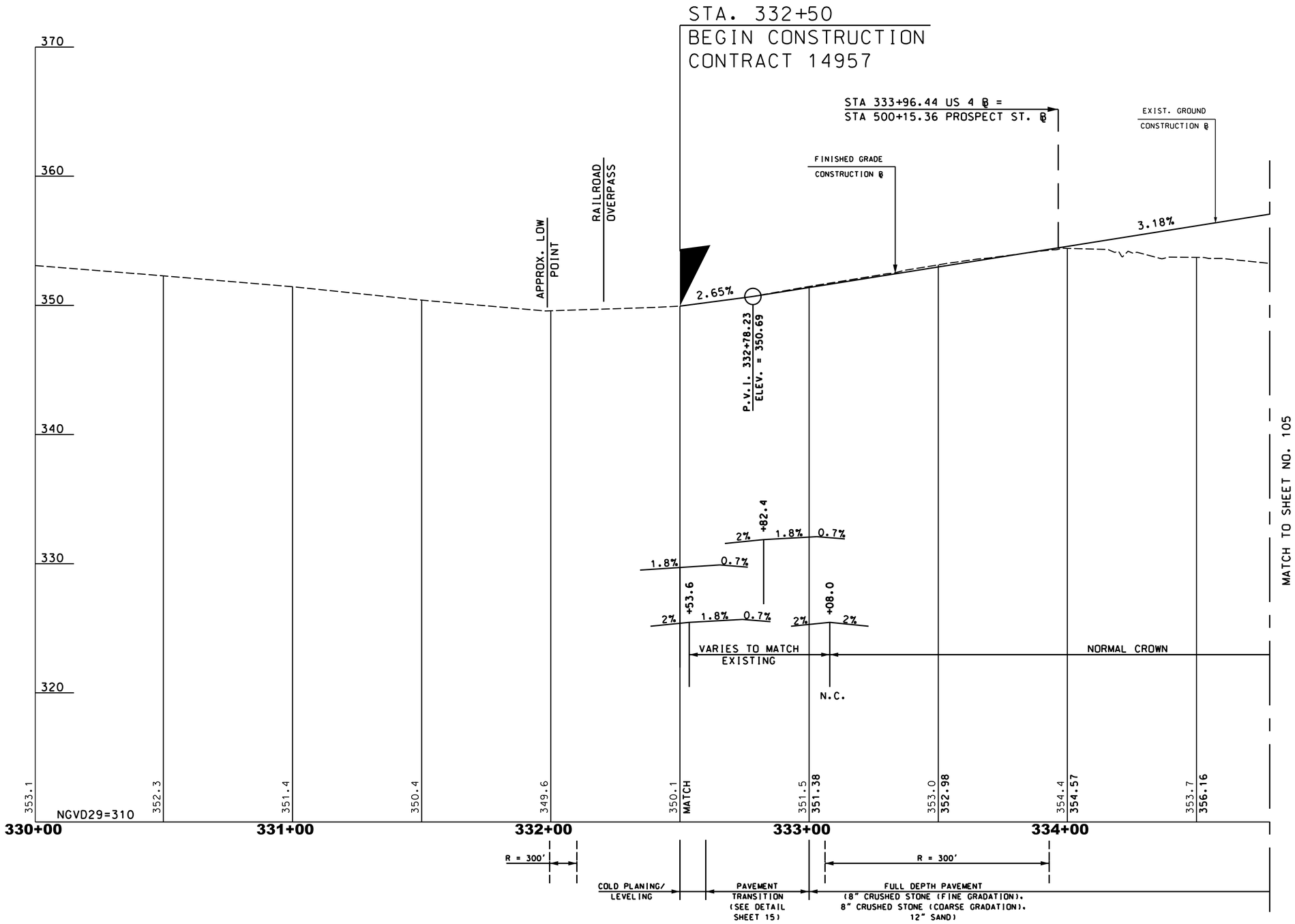

SCALE:
1"= 20' HORIZ.
1"= 4' VERT.

FAY SPOFFORD AND THORNDIKE, LLC

STATE OF NEW HAMPSHIRE

DEPARTMENT OF TRANSPORTATION • BUREAU OF BRIDGE DESIGN

US 4 PROFILE

DGN	STATE PROJECT NO.	SHEET NO.	TOTAL SHEETS
Prof1	14957	104	157

REVISIONS AFTER PROPOSAL

NUMBER	DATE	STATION	STATION	DESCRIPTION

SDR PROCESSED ARM	DATE 08/11	
NEW DESIGN DEM	DATE 05/13	
SHEET CHECKED TAT	DATE 05/13	
AS BUILT DETAILS	DATE	

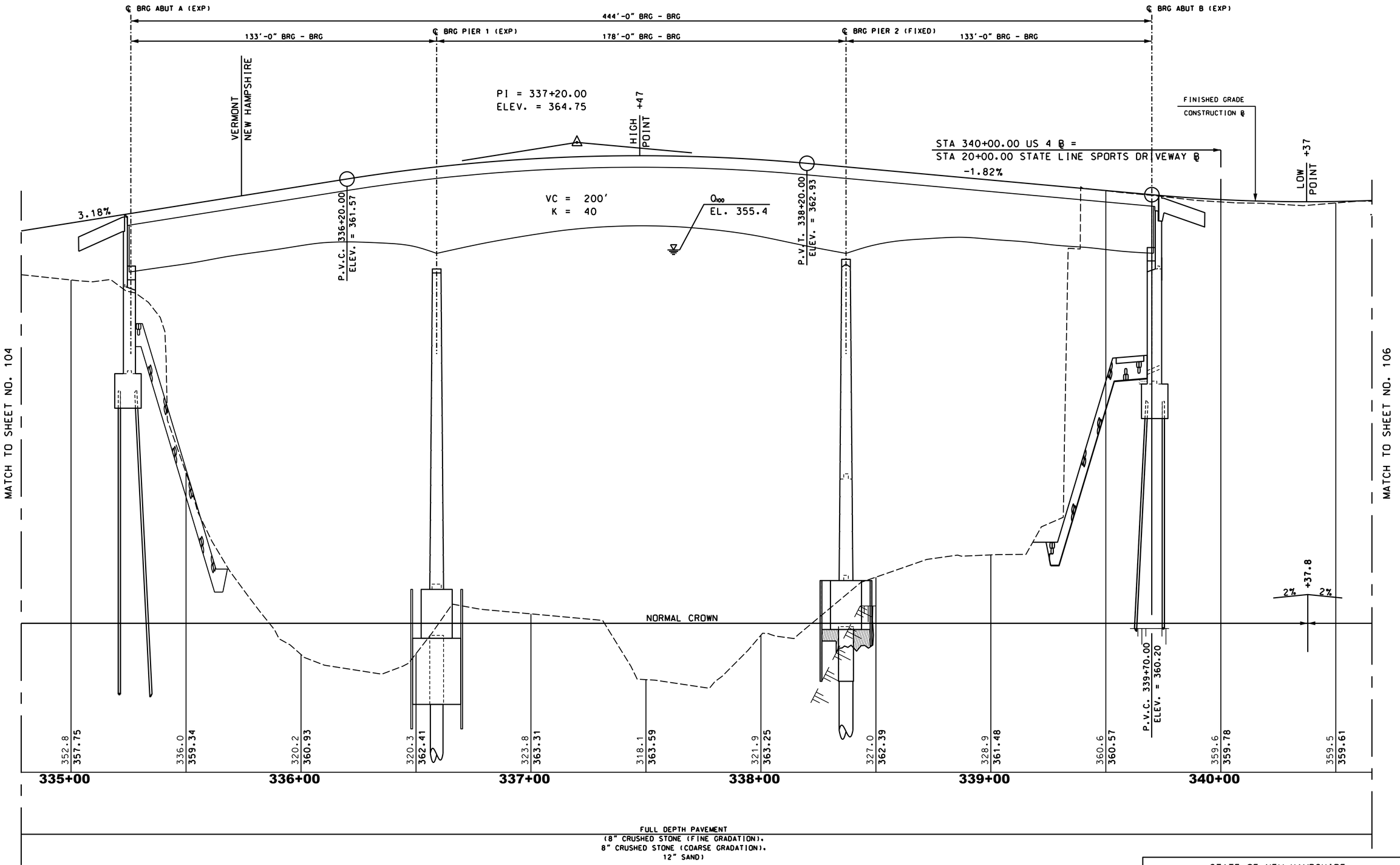

SCALE:
1"= 20' HORIZ.
1"= 4' VERT.

FAY SPOFFORD AND THORNDIKE, LLC

STATE OF NEW HAMPSHIRE

DEPARTMENT OF TRANSPORTATION • BUREAU OF BRIDGE DESIGN

US 4 PROFILE

DGN	STATE PROJECT NO.	SHEET NO.	TOTAL SHEETS
Prof2	14957	105	157

REVISIONS AFTER PROPOSAL

NUMBER	DATE	STATION	STATION	DESCRIPTION

		DATE
SDR PROCESSED	ARM	08/11
NEW DESIGN	DEM	05/13
SHEET CHECKED	TAT	05/13
AS BUILT DETAILS		DATE

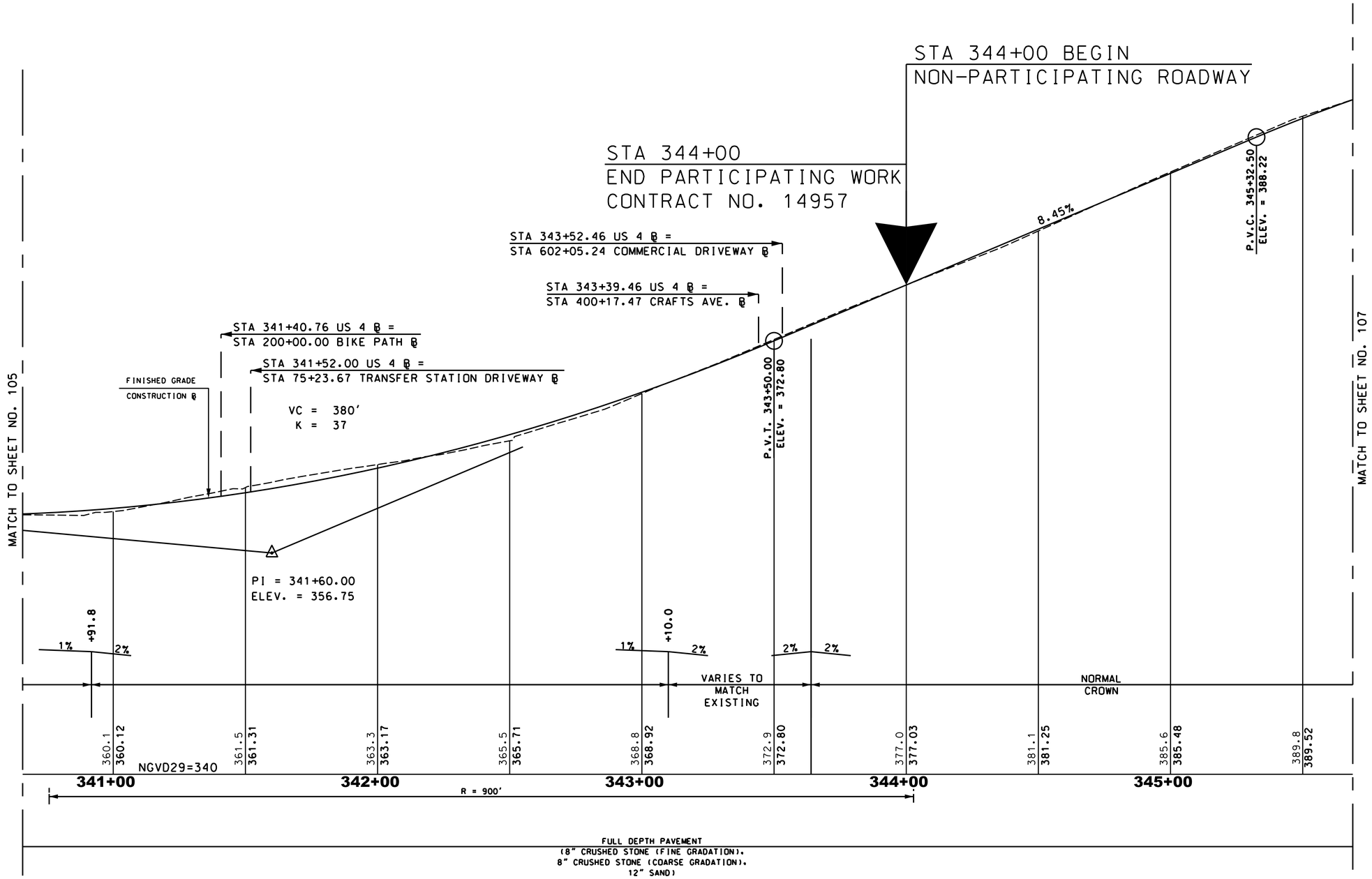

SCALE:
1"= 20' HORIZ.
1"= 4' VERT.

REVISIONS AFTER PROPOSAL			
NUMBER	DATE	STATION	DESCRIPTION

SDR PROCESSED ARM	DATE 08/11	
NEW DESIGN DEM	DATE 05/13	
SHEET CHECKED TAT	DATE 05/13	
AS BUILT DETAILS	DATE	

FAY SPOFFORD AND THORNDIKE, LLC

STATE OF NEW HAMPSHIRE

DEPARTMENT OF TRANSPORTATION • BUREAU OF BRIDGE DESIGN

US 4 PROFILE

DGN	STATE PROJECT NO.	SHEET NO.	TOTAL SHEETS
Prof3	14957	106	157

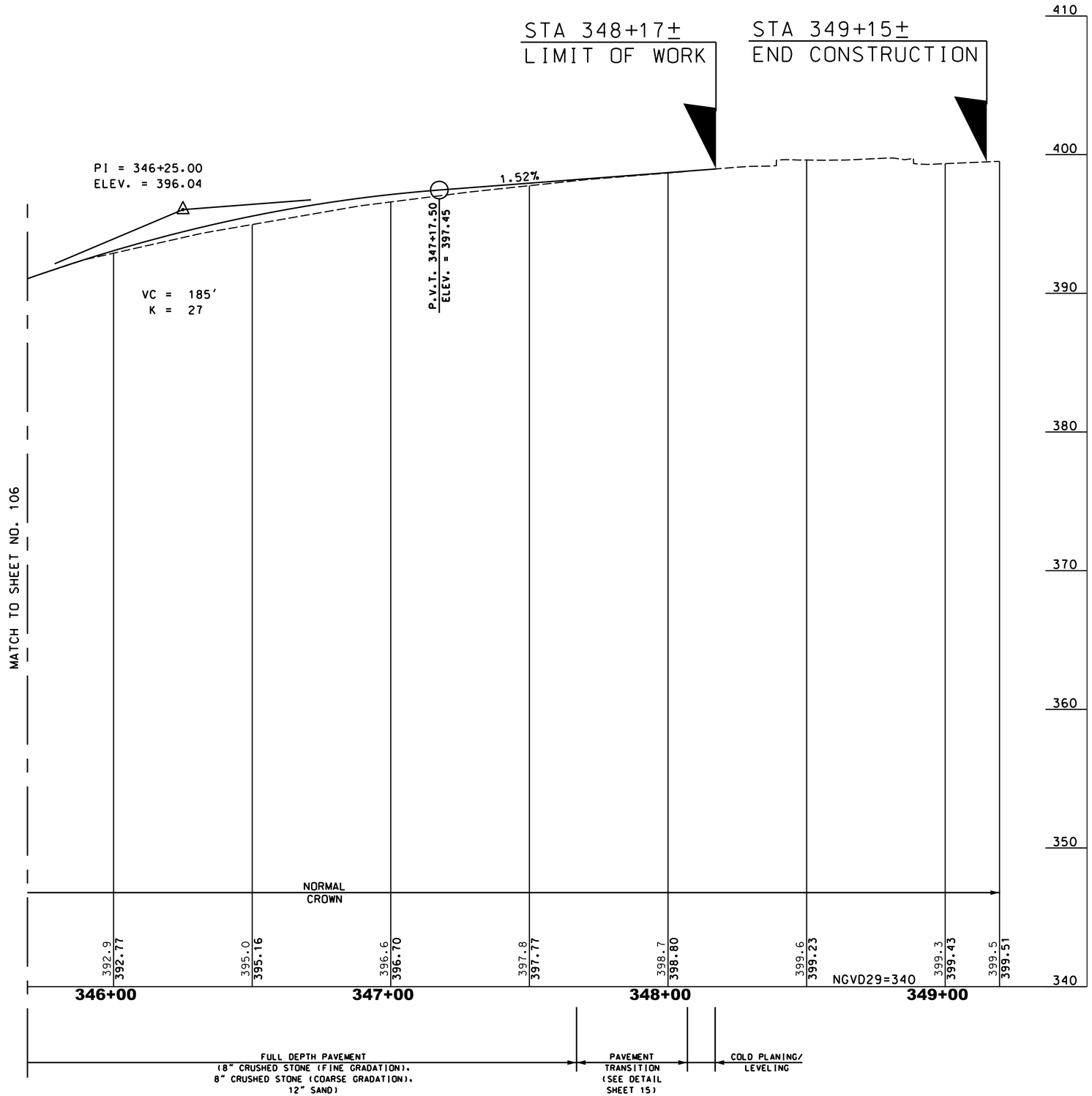

SCALE:
1"= 20' HORIZ.
1"= 4' VERT.

FAY SPOFFORD AND THORNDIKE, LLC

STATE OF NEW HAMPSHIRE

DEPARTMENT OF TRANSPORTATION • BUREAU OF BRIDGE DESIGN

US 4 PROFILE

DGN	STATE PROJECT NO.	SHEET NO.	TOTAL SHEETS
Prof4	14957	107	157

REVISIONS AFTER PROPOSAL

NUMBER	DATE	STATION	STATION	DESCRIPTION

SDR PROCESSED ARM	DATE 08/11	
NEW DESIGN DEM	DATE 05/13	
SHEET CHECKED TAT	DATE 05/13	
AS BUILT DETAILS	DATE	

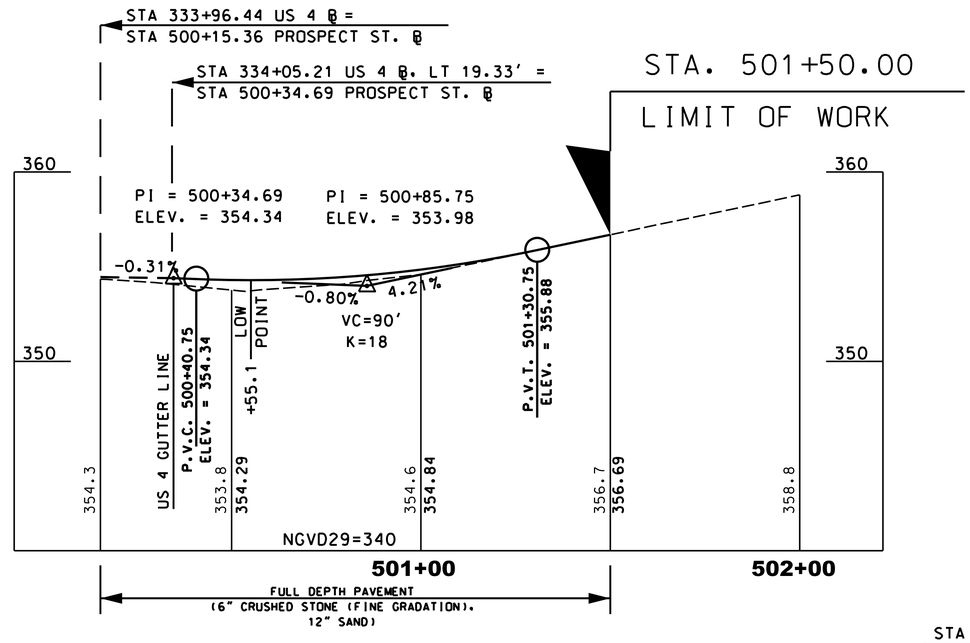

PROSPECT STREET

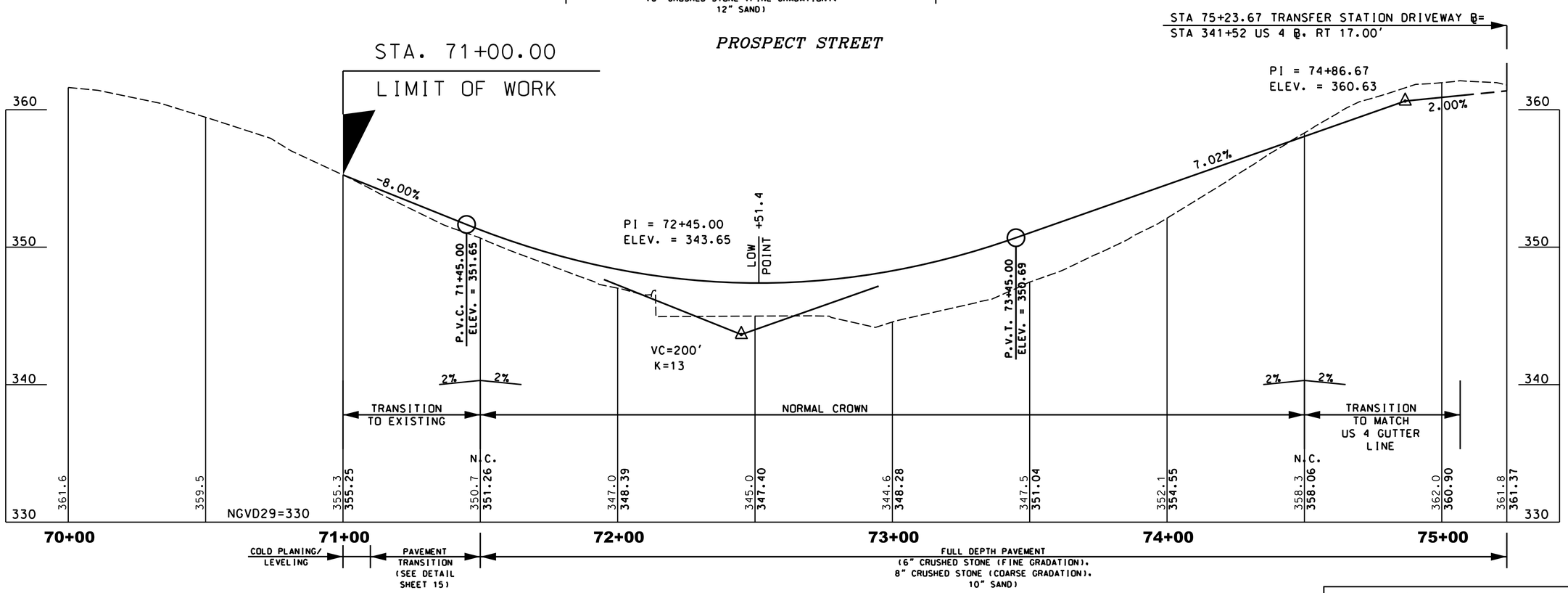

TRANSFER STATION DRIVEWAY

SCALE:
1"= 20' HORIZ.
1"= 4' VERT.

FAY SPOFFORD AND THORNDIKE, LLC

STATE OF NEW HAMPSHIRE

DEPARTMENT OF TRANSPORTATION • BUREAU OF BRIDGE DESIGN

SIDE ROAD / DRIVEWAY PROFILES

DGN	STATE PROJECT NO.	SHEET NO.	TOTAL SHEETS
	14957	108	157

REVISIONS AFTER PROPOSAL

STATION	STATION	DATE	NUMBER	DESCRIPTION

SDR PROCESSED	ARM	DATE 08/11
NEW DESIGN	DEM	DATE 05/13
SHEET CHECKED	TAT	DATE 05/13
AS BUILT DETAILS		DATE

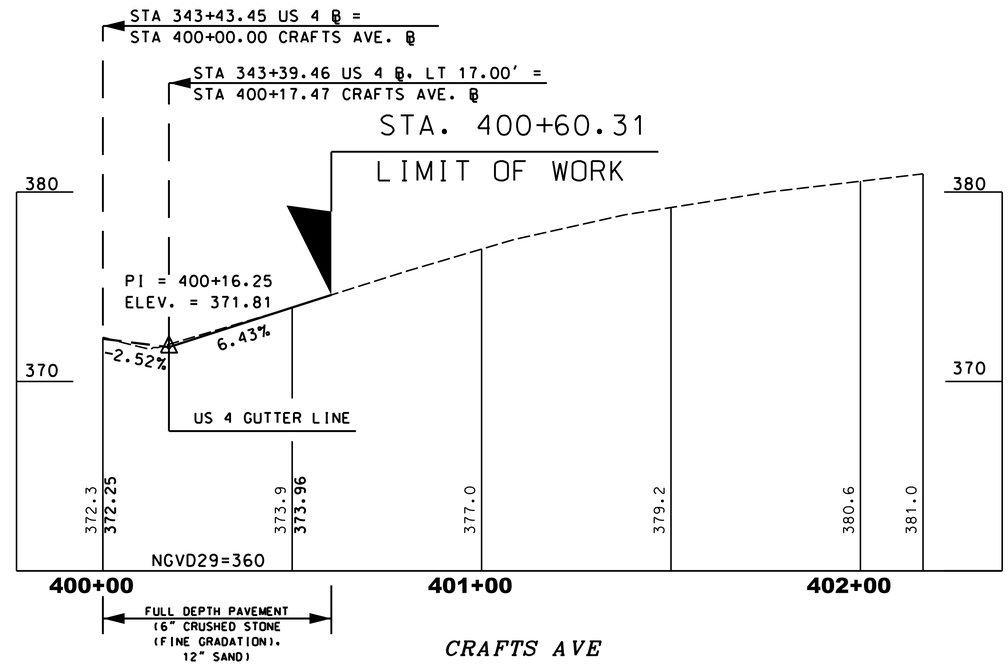

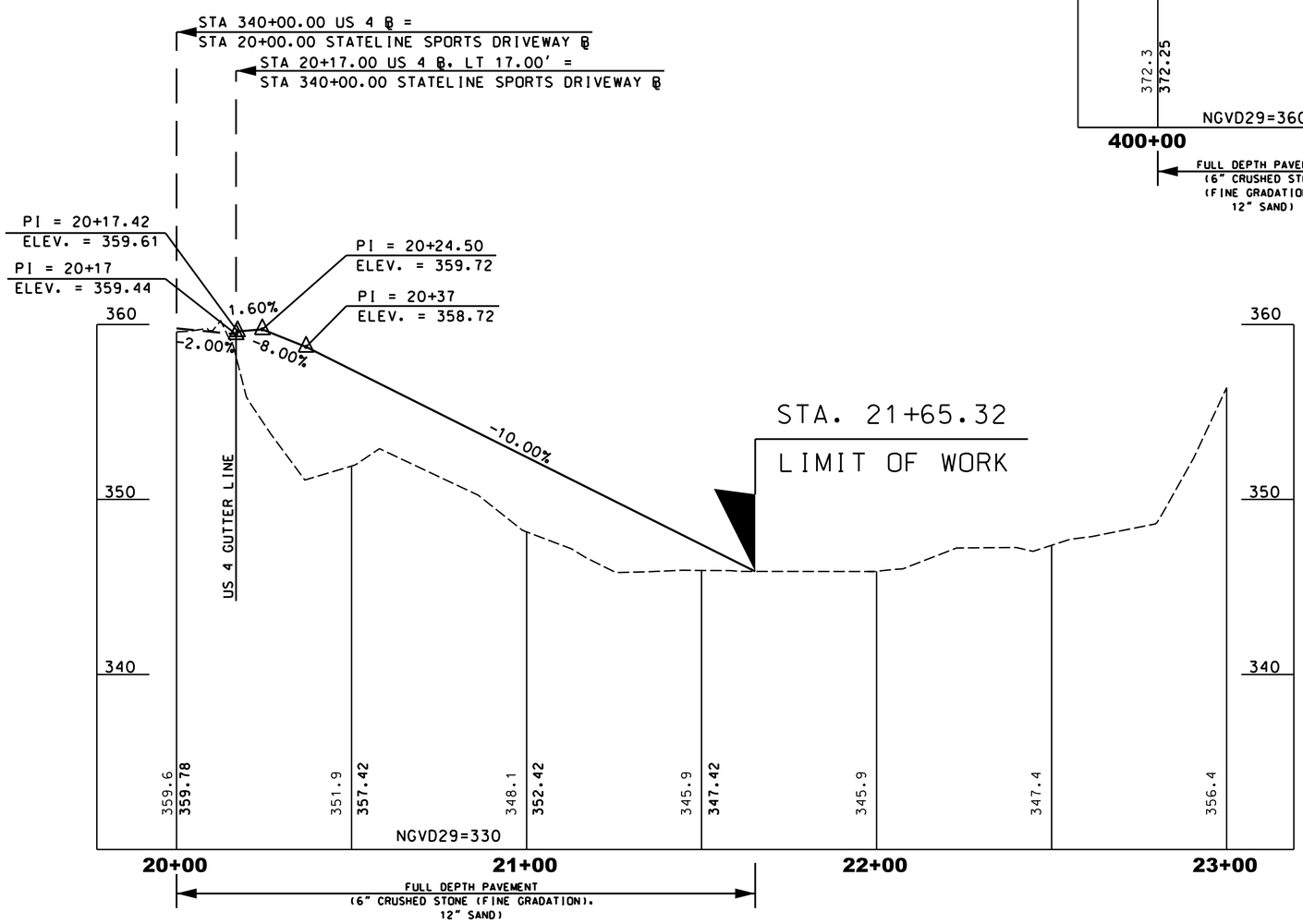

SCALE:
1"= 20' HORIZ.
1"= 4' VERT.

FAY SPOFFORD AND THORNDIKE, LLC

STATE OF NEW HAMPSHIRE

DEPARTMENT OF TRANSPORTATION • BUREAU OF BRIDGE DESIGN

SIDE ROAD / DRIVEWAY PROFILES

DGN	STATE PROJECT NO.	SHEET NO.	TOTAL SHEETS
	14957	109	157

REVISIONS AFTER PROPOSAL

NUMBER	DATE	STATION	STATION	DESCRIPTION

SDR PROCESSED	ARM	DATE 08/11
NEW DESIGN	DEM	DATE 05/13
SHEET CHECKED	TAT	DATE 05/13
AS BUILT DETAILS		DATE

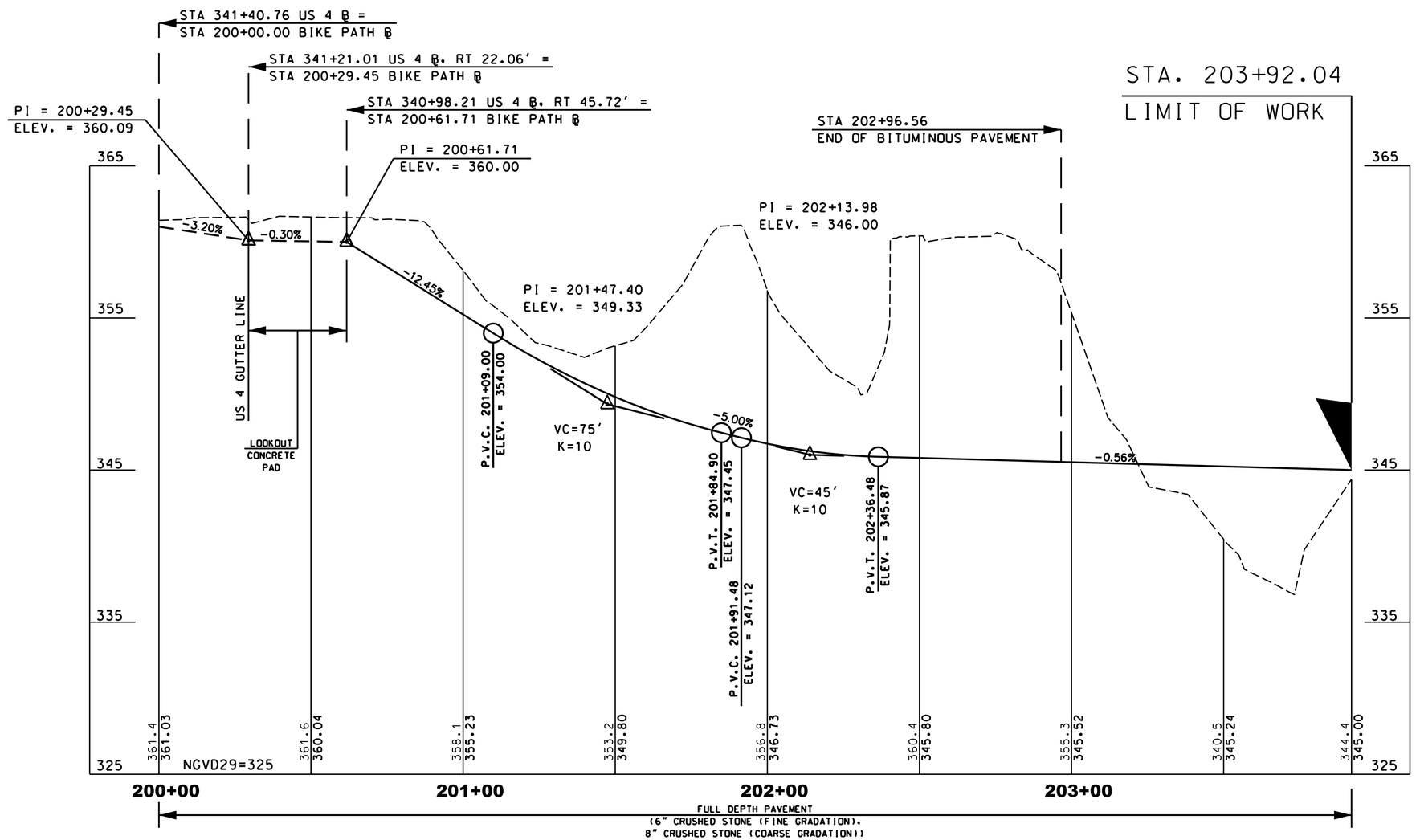

PROPOSED BIKE PATH

SCALE:
1"= 20' HORIZ.
1"= 4' VERT.

FAY SPOFFORD AND THORNDIKE, LLC

STATE OF NEW HAMPSHIRE

DEPARTMENT OF TRANSPORTATION • BUREAU OF BRIDGE DESIGN

SIDE ROAD / DRIVEWAY PROFILES

DGN	STATE PROJECT NO.	SHEET NO.	TOTAL SHEETS
	14957	110	157

REVISIONS AFTER PROPOSAL

NUMBER	DATE	STATION	STATION	DESCRIPTION

SDR PROCESSED	ARM	DATE 08/11
NEW DESIGN	DEM	DATE 05/13
SHEET CHECKED	TAT	DATE 05/13
AS BUILT DETAILS		DATE

SUPERELEVATION TABULATION					Notes
Station	CROSS SLOPE				
	Left		Right		
US 4	5'	12'	12' *	5'	
332+50	-1.80%	-1.80%	1.80%	-0.70%	
332+53.6	-2.00%	-2.00%	1.80%	-0.70%	
332+75	-2.00%	-2.00%	1.80%	-0.70%	
332+82.4	-2.00%	-2.00%	-0.70%	-0.70%	
333+00	-2.00%	-2.00%	-1.59%	-1.59%	
333+08	-2.00%	-2.00%	-2.00%	-2.00%	NC
	↓	↓	↓	↓	↓
340+37.76	-2.00%	-2.00%	-2.00%	-2.00%	NC
340+50	-2.34%	-1.32%	-2.00%	-2.00%	
340+73.76	-3.00%	0%	-2.00%	-2.00%	Flat, Lt.
340+91.76	-3.00%	1.00%	-2.00%	-2.00%	RC
	↓	↓	↓	↓	↓
343+10	-3.00%	1.00%	-2.00%	-2.00%	RC
343+28	-3.00%	0%	-2.00%	-2.00%	Flat, Lt.
343+39.75	-2.67%	-0.65%	-2.00%	-2.00%	
343+50	-2.39%	-1.22%	-2.00%	-2.00%	
343+64	-2.00%	-2.00%	-2.00%	-2.00%	NC

* Crown line shifts from 5.6' Rt. at Sta. 332+50 to 0' Rt. at Sta. 332+82.4.

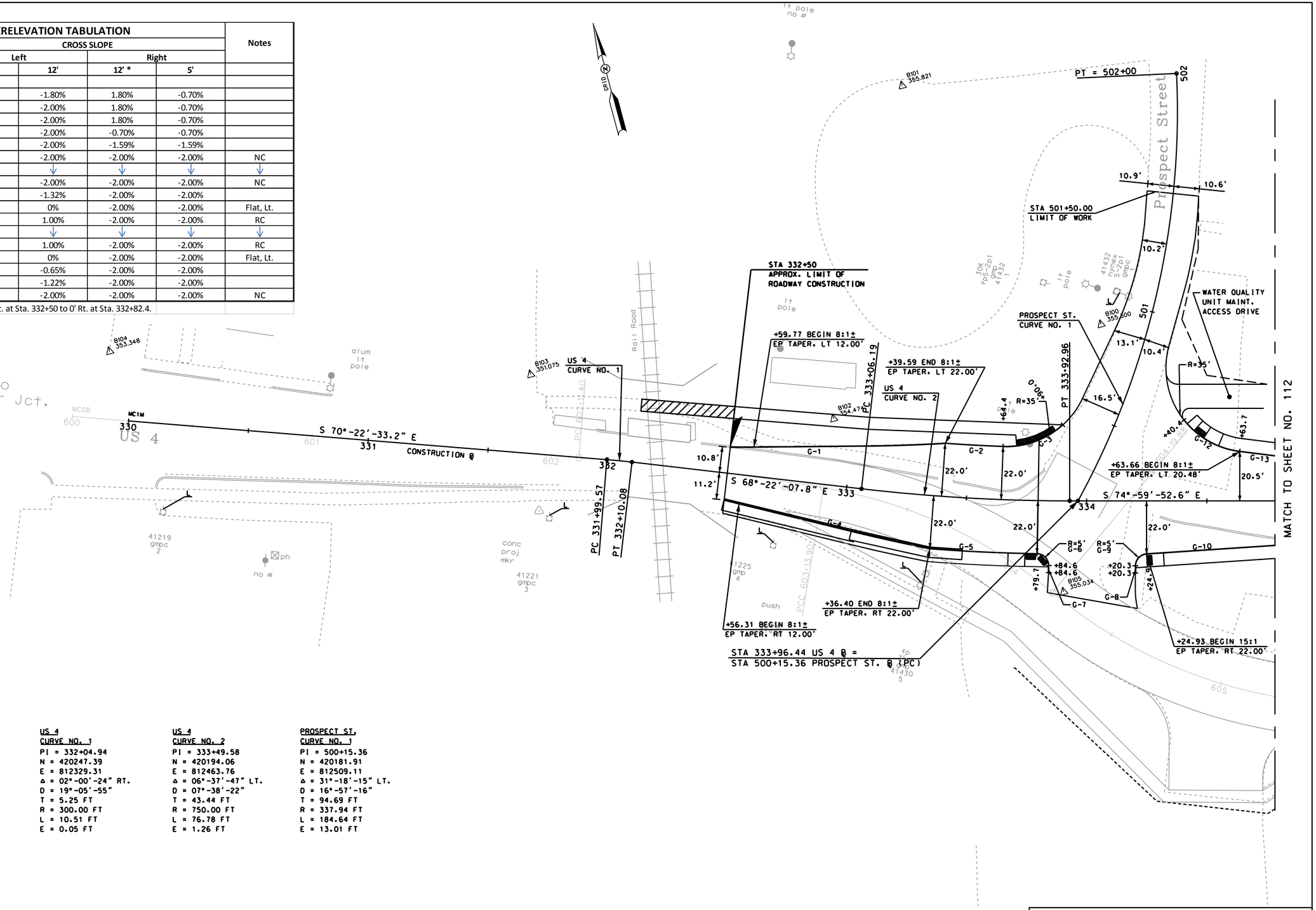

US 4
CURVE NO. 1
PI = 332+04.94
N = 420247.39
E = 812329.31
Δ = 02°-00'-24" RT.
D = 19°-05'-55"
T = 5.25 FT
R = 300.00 FT
L = 10.51 FT
E = 0.05 FT

US 4
CURVE NO. 2
PI = 333+49.58
N = 420194.06
E = 812463.76
Δ = 06°-37'-47" LT.
D = 07°-38'-22"
T = 43.44 FT
R = 750.00 FT
L = 76.78 FT
E = 1.26 FT

PROSPECT ST.
CURVE NO. 1
PI = 500+15.36
N = 420181.91
E = 812509.11
Δ = 31°-18'-15" LT.
D = 16°-57'-16"
T = 94.69 FT
R = 337.94 FT
L = 184.64 FT
E = 13.01 FT

20 0 20 40
SCALE IN FEET

FAY SPOFFORD AND THORNDIKE, LLC

STATE OF NEW HAMPSHIRE
DEPARTMENT OF TRANSPORTATION • BUREAU OF BRIDGE DESIGN

CURBING, PAVEMENT AND LIGHTING LAYOUT PLAN

DGN	STATE PROJECT NO.	SHEET NO.	TOTAL SHEETS
Align-1	14957	111	157

REVISIONS AFTER PROPOSAL				
NUMBER	DATE	STATION	STATION	DESCRIPTION

SDR PROCESSED	ARM	DATE 08/11
NEW DESIGN	DEM	DATE 05/13
SHEET CHECKED	TAT	DATE 05/13
AS BUILT DETAILS		DATE

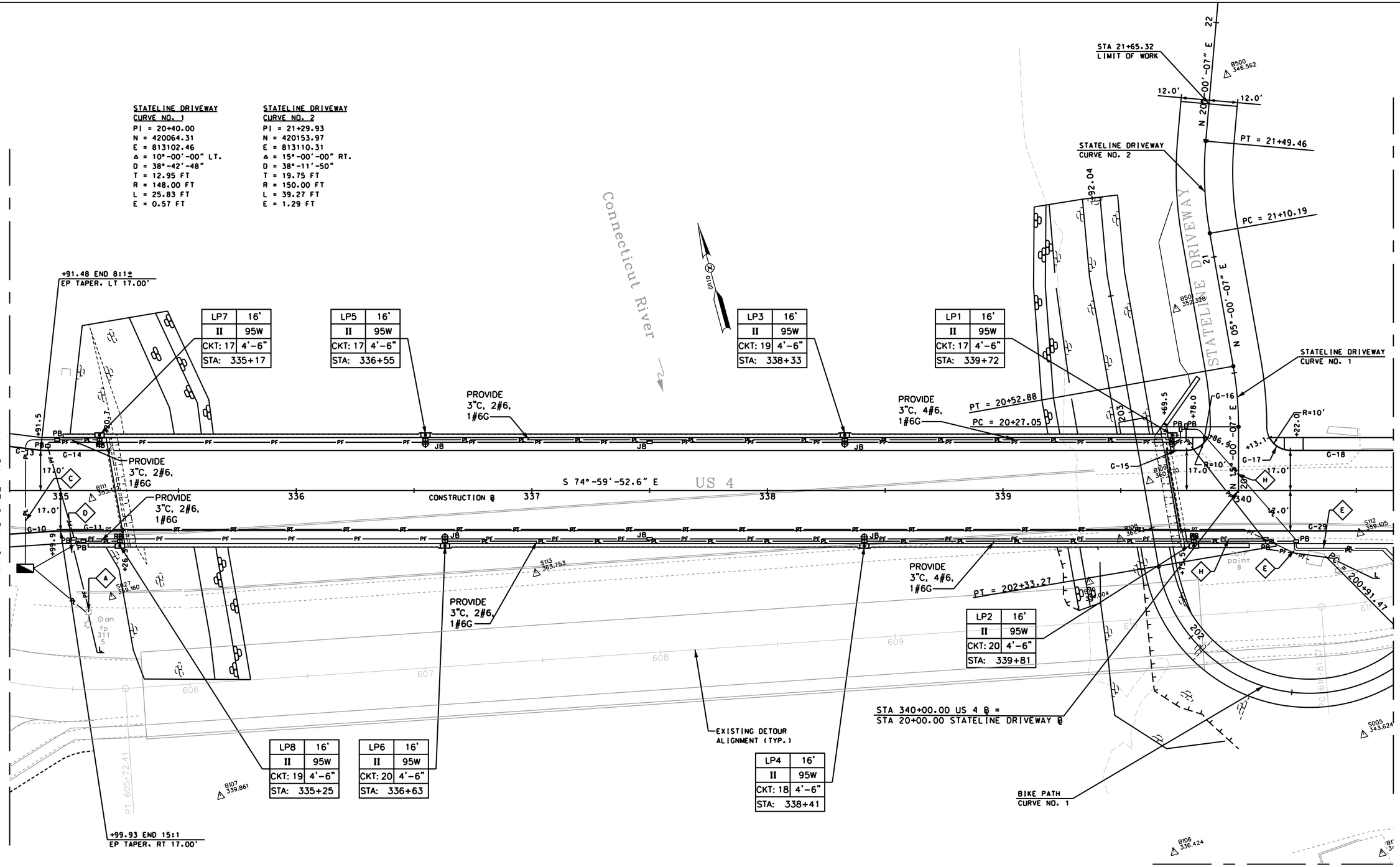

STATELINE DRIVEWAY
CURVE NO. 1
PI = 20+40.00
N = 420064.31
E = 813102.46
Δ = 10°-00'-00" LT.
D = 38°-42'-48"
T = 12.95 FT
R = 148.00 FT
L = 25.83 FT
E = 0.57 FT

STATELINE DRIVEWAY
CURVE NO. 2
PI = 21+29.93
N = 420153.97
E = 813110.31
Δ = 15°-00'-00" RT.
D = 38°-11'-50"
T = 19.75 FT
R = 150.00 FT
L = 39.27 FT
E = 1.29 FT

BIKE PATH
CURVE NO. 1
PI = 206+16.33
N = 419878.83
E = 813040.06
Δ = 125°-00'-00" RT.
D = 88°-08'-50"
T = 124.86 FT
R = 65.00 FT
L = 141.81 FT
E = 75.77 FT

20 0 20 40
SCALE IN FEET

FAY SPOFFORD AND THORNDIKE, LLC

STATE OF NEW HAMPSHIRE
DEPARTMENT OF TRANSPORTATION • BUREAU OF BRIDGE DESIGN

CURBING, PAVEMENT AND LIGHTING LAYOUT PLAN

DGN	STATE PROJECT NO.	SHEET NO.	TOTAL SHEETS
Align-2	14957	112	157

REVISIONS AFTER PROPOSAL			
NUMBER	DATE	STATION	DESCRIPTION

SDR PROCESSED	ARM	DATE 08/11
NEW DESIGN	DEM	DATE 05/13
SHEET CHECKED	TAT	DATE 05/13
AS BUILT DETAILS		DATE

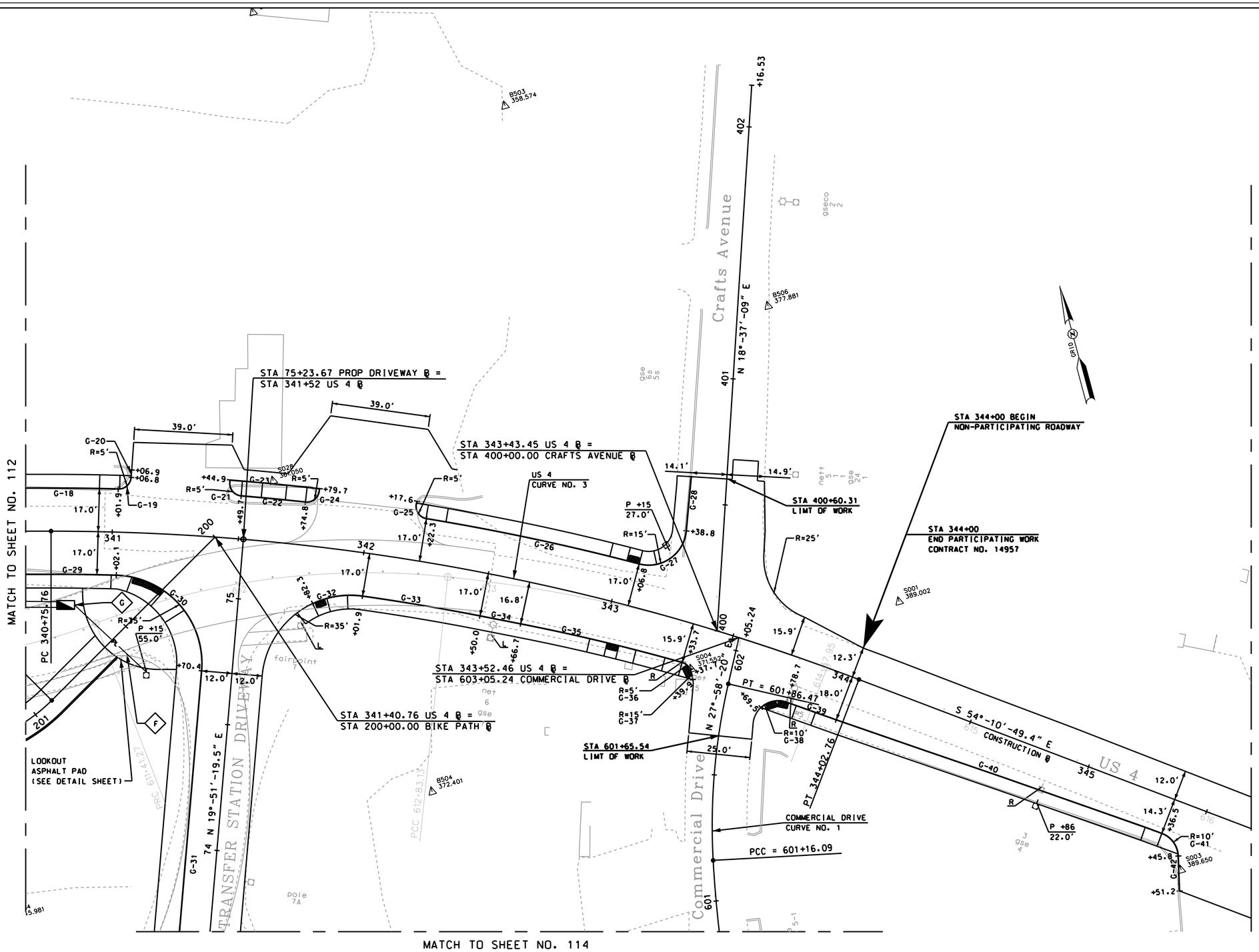

US 4
CURVE NO. 3
PI = 342+41.06
N = 419963.27
E = 813324.95
Δ = 20°-48'-53" RT.
D = 06°-21'-58"
T = 165.30 FT
R = 900.00 FT
L = 326.96 FT
E = 15.05 FT

COMMERCIAL DRIVE
CURVE NO. 1
PI = 601+51.51
N = 419846.94
E = 813392.02
Δ = 16°-07'-43" RT.
D = 22°-55'-06"
T = 35.42 FT
R = 250.00 FT
L = 70.37 FT
E = 2.50 FT

20 0 20 40
SCALE IN FEET

FAY SPOFFORD AND THORNDIKE, LLC

STATE OF NEW HAMPSHIRE
DEPARTMENT OF TRANSPORTATION • BUREAU OF BRIDGE DESIGN

CURBING, PAVEMENT AND LIGHTING LAYOUT PLAN

DGN	STATE PROJECT NO.	SHEET NO.	TOTAL SHEETS
Align-3	14957	113	157

REVISIONS AFTER PROPOSAL

NUMBER	DATE	STATION	STATION	DESCRIPTION

SDR PROCESSED	ARM	DATE 08/11
NEW DESIGN	DEM	DATE 05/13
SHEET CHECKED	TAT	DATE 05/13
AS BUILT DETAILS		DATE

MATCH TO SHEET NO. 112

MATCH TO SHEET NO. 113

4:1

12.0' 12.0'

PT = 73+34.57

PROP DRIVEWAY
CURVE NO. 2

73

G-31

PC = 72+71.73

N 7°-51'-8.9" E

+47.7

12.0' 12.0'

PT = 72+08.25

72

Commercial Drive

B505
373.943

1 story
concrete block

Connecticut River

PROP DRIVEWAY
CURVE NO. 1

PC = 71+38.57

71

N 18°-45'-44.0" W

TRANSFER STATION DRIVEWAY

STA 71+00
APPROX. LIMIT OF
ROADWAY CONSTRUCTION

B407
538
CONSTRUCTION ℄ 70

PROP DRIVEWAY CURVE NO. 1

PI = 71+74.05
N = 419646.44
E = 813145.24
Δ = 26°-36'-53" RT.
D = 38°-11'-50"
T = 35.48 FT
R = 150.00 FT
L = 69.68 FT
E = 4.14 FT

PROP DRIVEWAY CURVE NO. 2

PI = 73+03.27
N = 419775.72
E = 813163.07
Δ = 12°-00'-11" RT.
D = 19°-05'-55"
T = 31.54 FT
R = 300.00 FT
L = 62.85 FT
E = 1.65 FT

GRID N

20 0 20 40
SCALE IN FEET

FAY SPOFFORD AND THORNDIKE, LLC

STATE OF NEW HAMPSHIRE

DEPARTMENT OF TRANSPORTATION • BUREAU OF BRIDGE DESIGN

CURBING, PAVEMENT AND LIGHTING LAYOUT PLAN

DGN	STATE PROJECT NO.	SHEET NO.	TOTAL SHEETS
Align-4	14957	114	157

REVISIONS AFTER PROPOSAL

NUMBER	DATE	STATION	STATION	DESCRIPTION

SDR PROCESSED ARM	DATE 08/11	
NEW DESIGN DEM	DATE 05/13	
SHEET CHECKED TAT	DATE 05/13	
AS BUILT DETAILS	DATE	

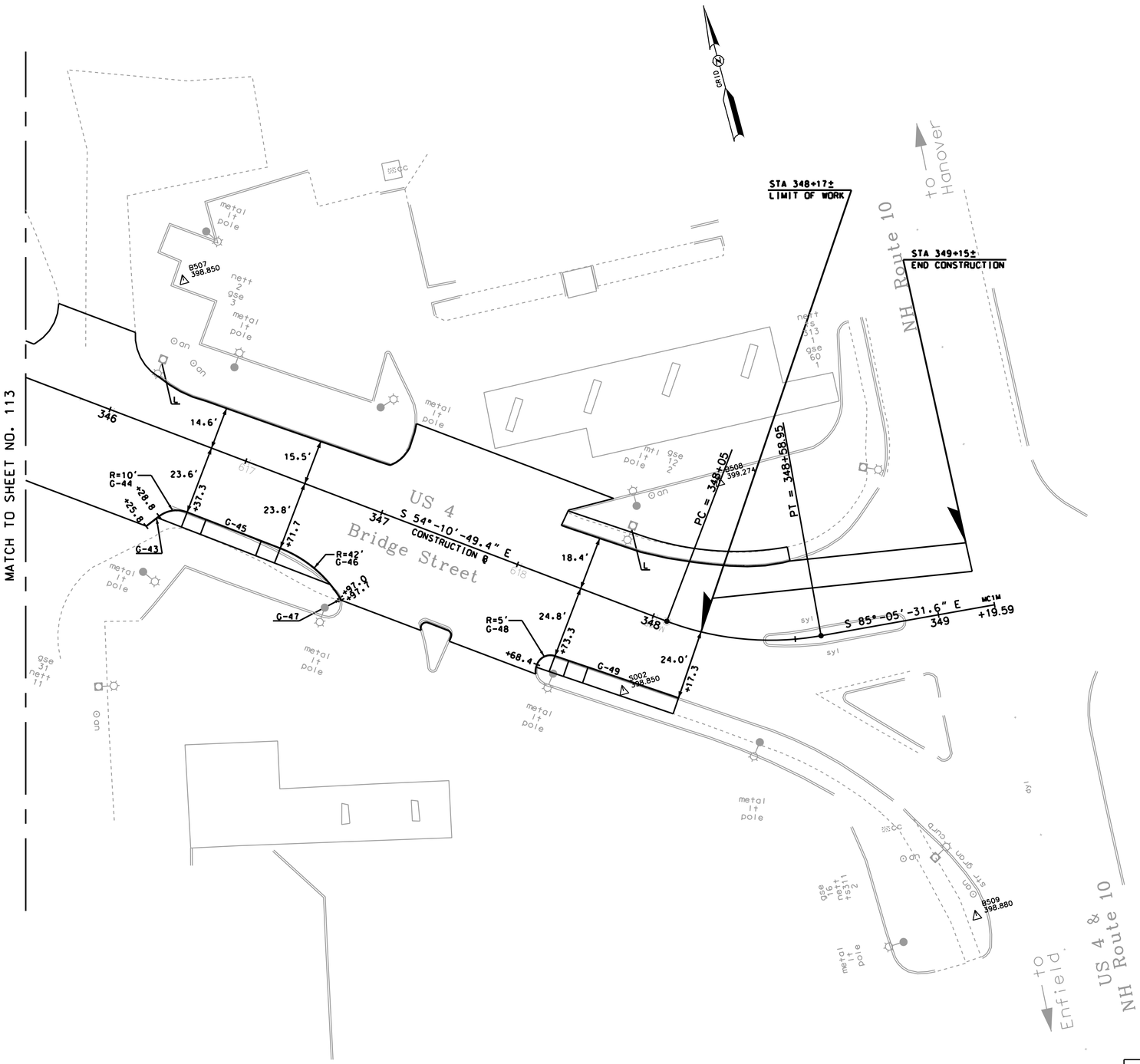

20 0 20 40

SCALE IN FEET

REVISIONS AFTER PROPOSAL			
NUMBER	DATE	STATION	DESCRIPTION

SDR PROCESSED	ARM	DATE 08/11	
NEW DESIGN	DEM	DATE 05/13	
SHEET CHECKED	TAT	DATE 05/13	
AS BUILT DETAILS		DATE	

STATE OF NEW HAMPSHIRE

DEPARTMENT OF TRANSPORTATION • BUREAU OF BRIDGE DESIGN

CURBING, PAVEMENT AND LIGHTING LAYOUT PLAN

FAY SPOFFORD AND THORNDIKE, LLC

DGN	STATE PROJECT NO.	SHEET NO.	TOTAL SHEETS
Align-5	14957	115	157

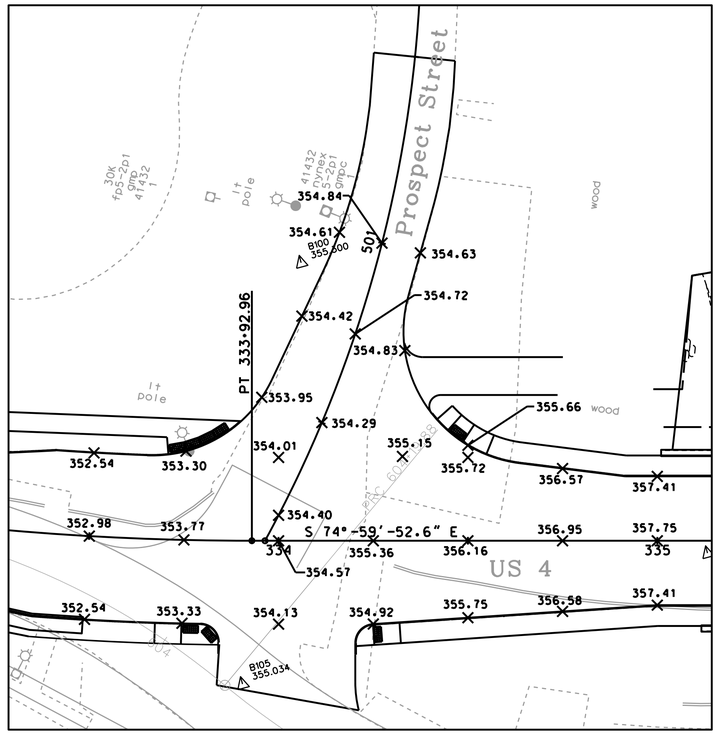

US 4 AND PROSPECT STREET

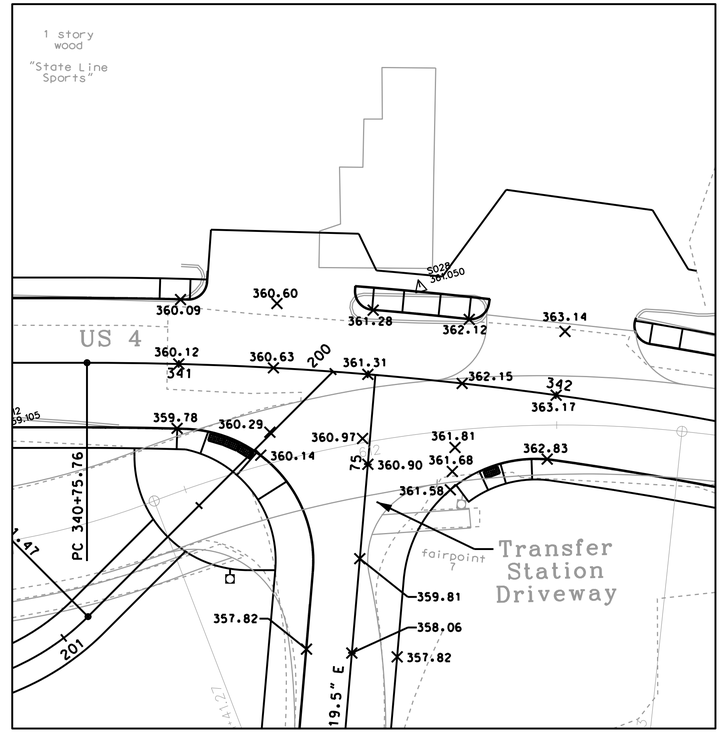

US 4 AND TRANSFER STATION DRIVEWAY

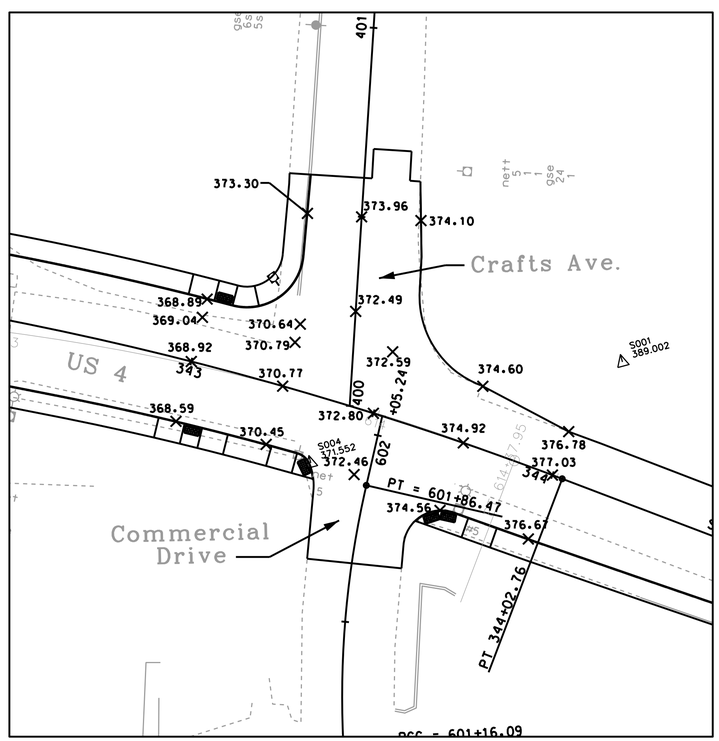

US 4 AND CRAFTS AVE./COMMERCIAL DRIVE

20 0 20 40

SCALE IN FEET

FAY SPOFFORD AND THORNDIKE, LLC

STATE OF NEW HAMPSHIRE

DEPARTMENT OF TRANSPORTATION • BUREAU OF BRIDGE DESIGN

INTERSECTION GRADING PLANS

DGN	STATE PROJECT NO.	SHEET NO.	TOTAL SHEETS
	14957	116	157

REVISIONS AFTER PROPOSAL

NUMBER	DATE	STATION	STATION	DESCRIPTION

		DATE
SDR PROCESSED	ARM	08/11
NEW DESIGN	DEM	05/13
SHEET CHECKED	TAT	05/13

AS BUILT DETAILS DATE

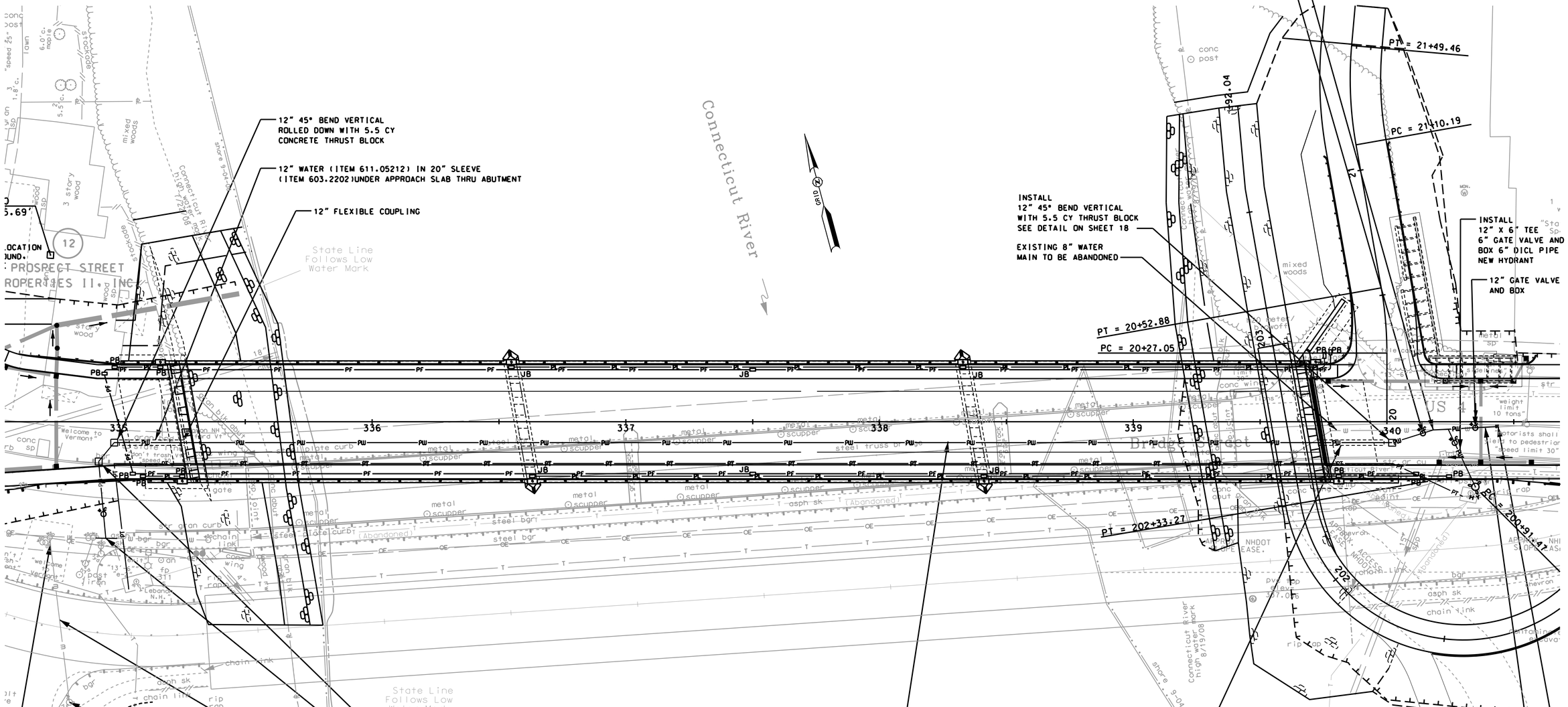

NOTE:
INSTALL 3" INSULATION (ITEM 611.951) AROUND WATER MAIN ITEM 611.05212 IN 20" SLEEVE AND ITEM 611.06212 WATER MAIN ON BRIDGE CROSSING

20 0 20 40
SCALE IN FEET

FAY SPOFFORD AND THORNDIKE, LLC

STATE OF NEW HAMPSHIRE
DEPARTMENT OF TRANSPORTATION • BUREAU OF BRIDGE DESIGN

WATER MAIN REPLACEMENT PLAN

DGN	STATE PROJECT NO.	SHEET NO.	TOTAL SHEETS
	14957	117	157

REVISIONS AFTER PROPOSAL

NUMBER	DATE	STATION	STATION	DESCRIPTION

		DATE
SDR PROCESSED	ARM	08/11
NEW DESIGN	DEM	05/13
SHEET CHECKED	TAT	05/13
AS BUILT DETAILS		DATE

REMOVE
12"X8" REDUCER
12" GATE VALVE & BOX
C.T.E 12" WATER WITH
SOLID SLEEVE COUPLING

REMOVE
8" WATER AS NECESSARY TO
CONNECT 12" WATER MAIN
ABANDON 8" WATER MAIN AND
PLUG END WITH MASONRY

INSTALL 12" DICL
WATER MAIN
(ITEM 611.05212)

10' MIN. HORIZONTAL
SEPARATION

LAY 12" WATER MAIN
UNDER DRAIN (USING
JOINT DEFLECTION)
WITH 18" SEPARATION

LAY 12" WATER MAIN
UNDER DRAIN (USING
JOINT DEFLECTION)
WITH 18" SEPARATION

INSTALL
12"X12" TAPPING SLEEVE
12" GATE VALVE AND BOX

CUT AND CAP 8" WATER
CLOSE EXISTING 8" GATE
VALVE REMOVE BOX AND PLUG
END WITH MASONRY

EXISTING 8" WATER
MAIN TO BE ABANDONED

INSTALL 12" 22½° BEND

2-12" 45° BEND
HORIZONTAL WITH
5.5 CY. CONCRETE
THRUST BLOCK

REMOVE 6"X6" TEE
INSTALL 12"X6" TEE
6" GATE VALVE & BOX
C.T.E. 6" HYDRANT

REMOVE 12"X8" TEE
INSTALL 12"X12" TEE
12" GATE VALVE & BOX
12" DICL PIPE
12" SOLID SLEEVE COUPLING

INSTALL
12"X6" REDUCER
6" SOLID SLEEVE COUPLING
C.T.E. 6" WATER

10' MIN. HORIZONTAL
SEPARATION

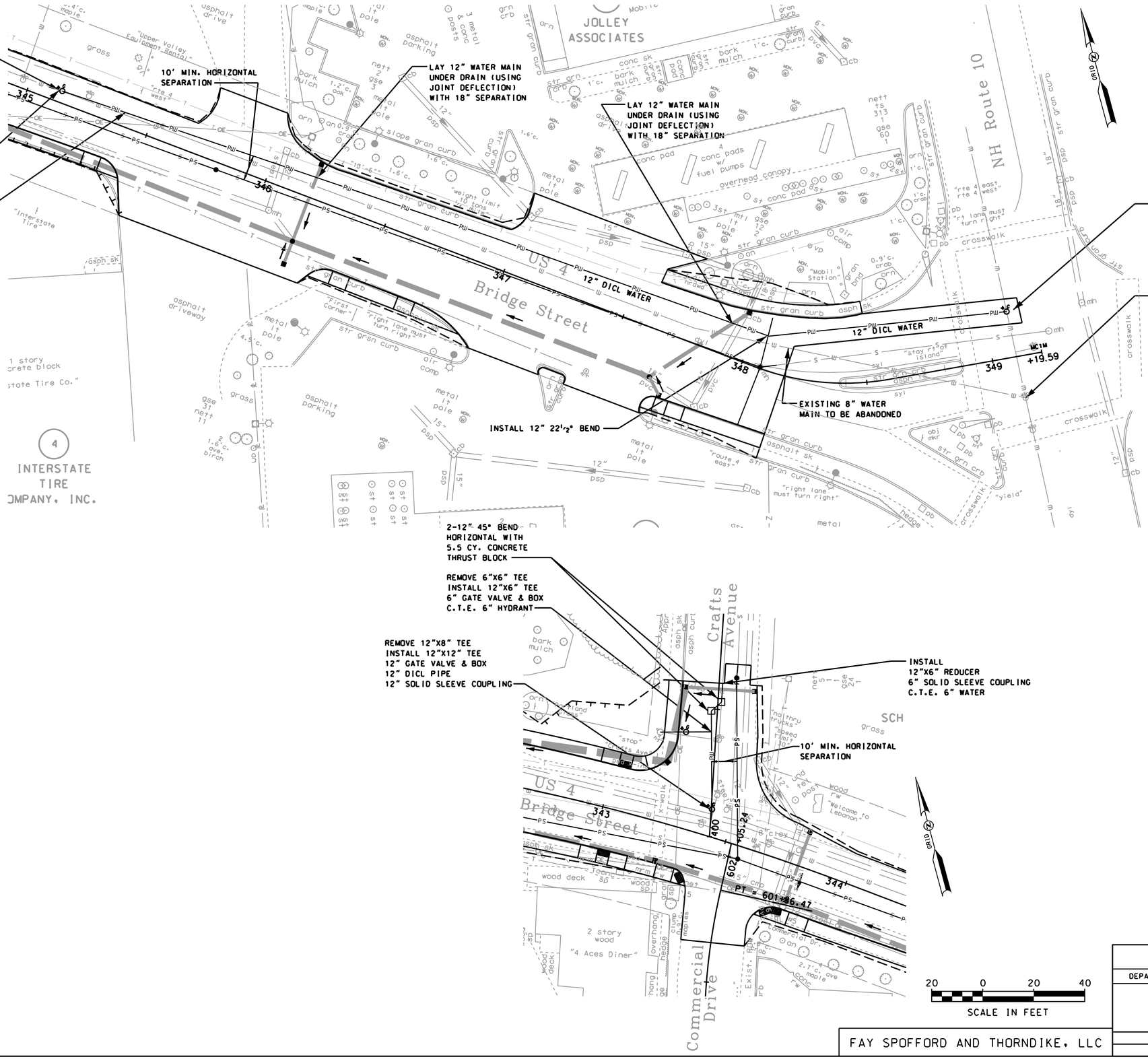

REVISIONS AFTER PROPOSAL			
NUMBER	DATE	STATION	STATION	DESCRIPTION

SDR PROCESSED	ARM	DATE 08/11
NEW DESIGN	DEM	DATE 05/13
SHEET CHECKED	TAT	DATE 05/13
AS BUILT DETAILS		DATE

STATE OF NEW HAMPSHIRE

DEPARTMENT OF TRANSPORTATION • BUREAU OF BRIDGE DESIGN

WATER MAIN REPLACEMENT PLAN

DGN	STATE PROJECT NO.	SHEET NO.	TOTAL SHEETS
	14957	118	157

FAY SPOFFORD AND THORNDIKE, LLC

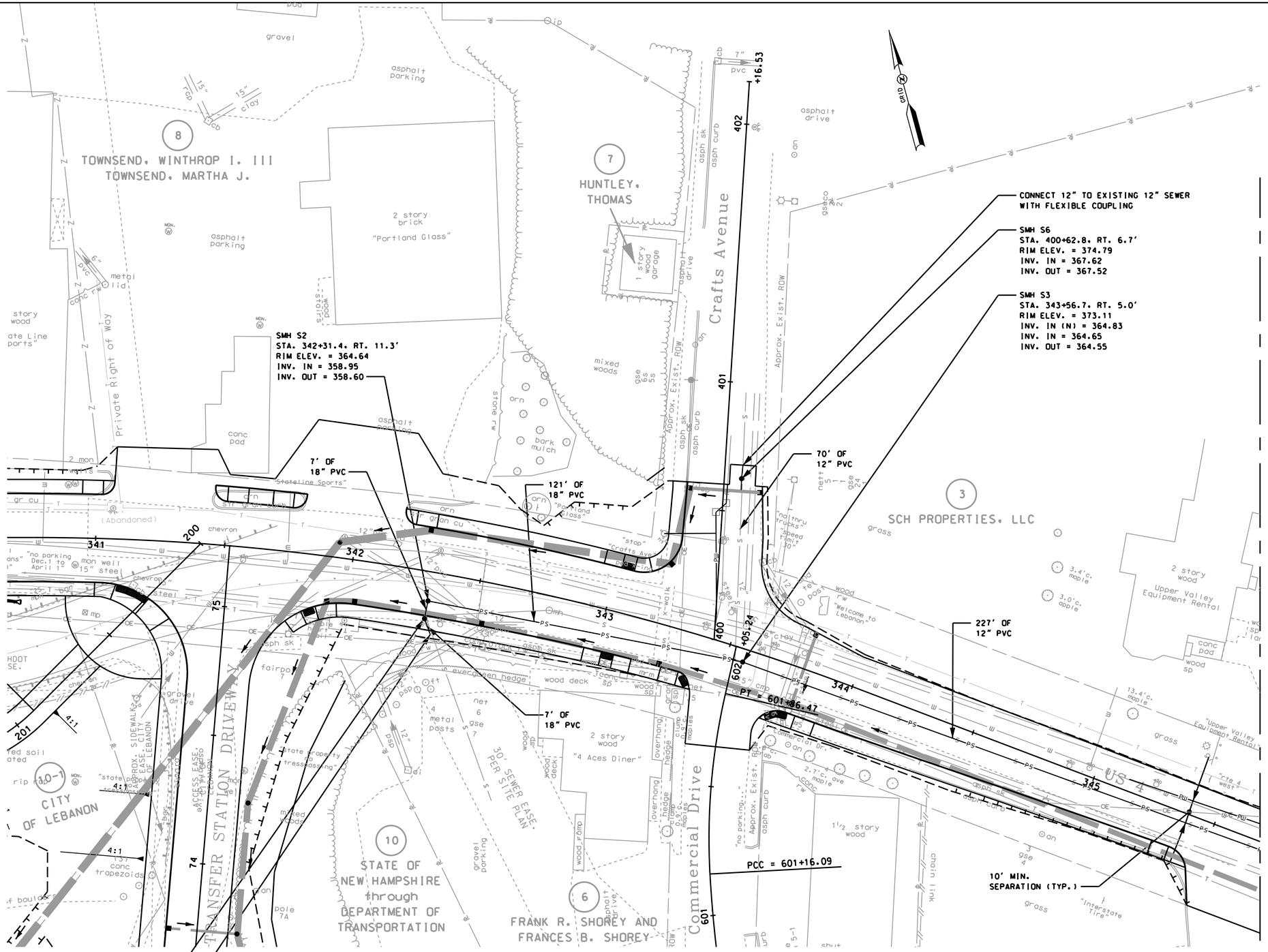

FAY SPOFFORD AND THORNDIKE, LLC

STATE OF NEW HAMPSHIRE

DEPARTMENT OF TRANSPORTATION • BUREAU OF BRIDGE DESIGN

SANITARY SEWER REPLACEMENT PLAN - 1

DGN	STATE PROJECT NO.	SHEET NO.	TOTAL SHEETS
	14957	119	157

REVISIONS AFTER PROPOSAL

NUMBER	DATE	STATION	STATION	DESCRIPTION

		DATE
SDR PROCESSED	ARM	08/11
NEW DESIGN	RHD	05/13
SHEET CHECKED	BES	05/13

AS BUILT DETAILS DATE

REVISIONS AFTER PROPOSAL			
NUMBER	DATE	STATION	STATION	DESCRIPTION

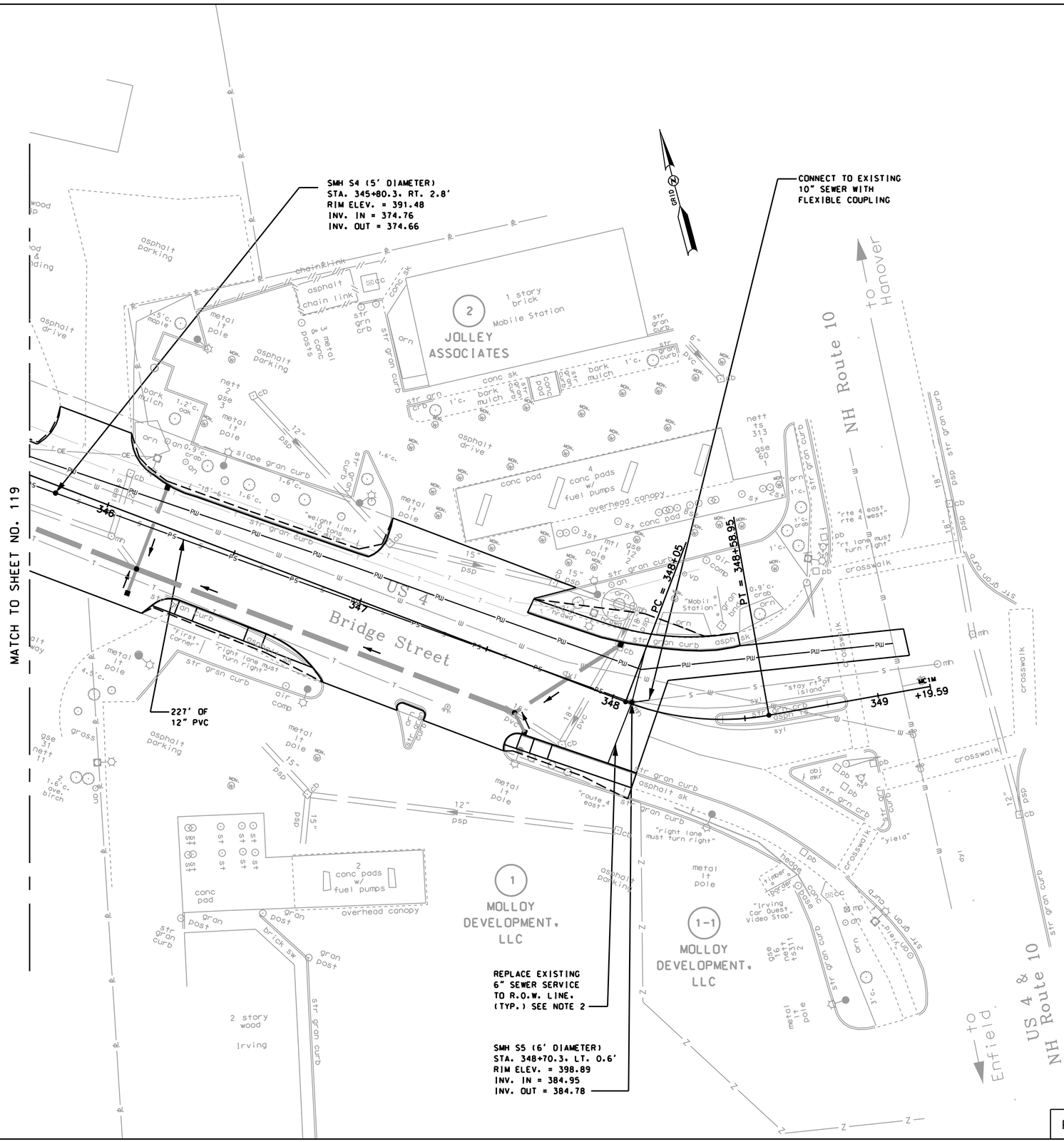

SDR PROCESSED	ARM	DATE 08/11
NEW DESIGN	RHD	DATE 05/13
SHEET CHECKED	BES	DATE 05/13
AS BUILT DETAILS		DATE

FAY SPOFFORD AND THORNDIKE, LLC

STATE OF NEW HAMPSHIRE

DEPARTMENT OF TRANSPORTATION • BUREAU OF BRIDGE DESIGN

SANITARY SEWER REPLACEMENT PLAN - 2

DGN	STATE PROJECT NO.	SHEET NO.	TOTAL SHEETS
	14957	120	157

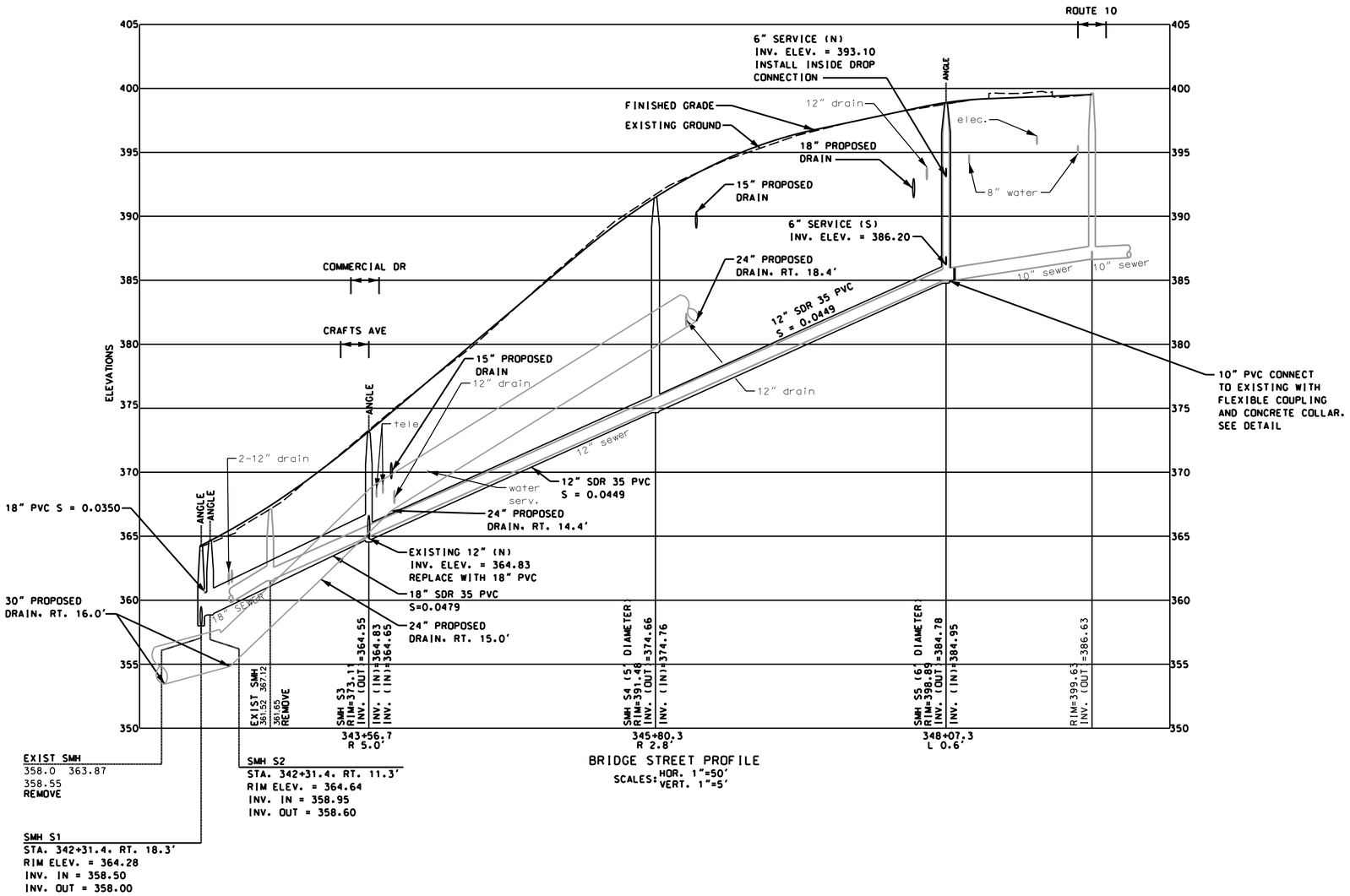

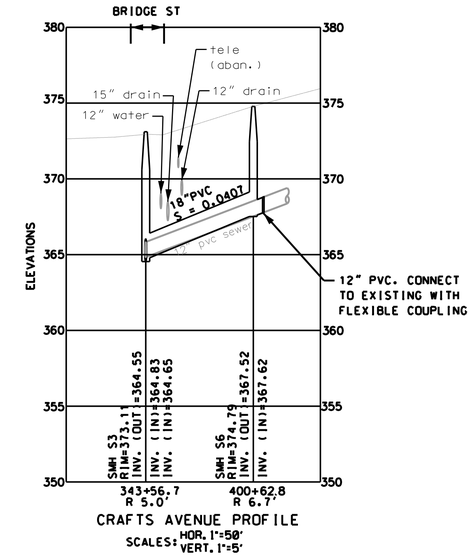

SEWER REPLACEMENT NOTES:

1. REMOVE AND DISPOSE OF EXISTING 10", 12" AND 18" SEWER AND MANHOLES BETWEEN STA. 342+31.4 AND 348+07.3 (OFFSET AS SHOWN). FURNISH AND INSTALL NEW 10", 12" AND 18" PVC SEWER AND MANHOLES TO LINES AND GRADES SHOWN.
2. ALL PROPERTIES AND STRUCTURES ABUTTING BRIDGE STREET HAVE 4" OR 6" SEWER SERVICE LATERALS. ALL SEWER SERVICES ENCOUNTERED DURING INSTALLATION OF NEW 12" SEWER, CONNECTED TO MAINLINE OR MANHOLES, SHALL BE REMOVED AND REPLACED WITH 6" PVC FROM THE NEW SEWER TO THE BRIDGE STREET R.O.W. LINE. CONNECT NEW 6" PVC TO EXISTING WITH FLEXIBLE COUPLING AND REDUCER AS REQUIRED.
3. SEWER MANHOLE STATIONING CORRESPONDS TO THE BRIDGE STREET BASELINE STATIONING OFFSET RIGHT(R) OR LEFT(L) TO THE DISTANCE SHOWN.
4. SEAL ALL CONNECTIONS BETWEEN NEW SEWERS, AND EXISTING SEWERS AND STRUCTURES, WATERTIGHT.
5. FIELD VERIFY ELEVATIONS OF EXISTING BRIDGE STREET SEWER PRIOR TO CONSTRUCTION. ADJUST GRADE OF NEW 12" SEWER AS REQUIRED.
6. NEW SEWER MANHOLES SHALL BE 4' DIAMETER UNLESS OTHERWISE NOTED.
7. 100 YEAR FLOOD ELEVATION IS AT ELEVATION 355.4.
8. MAINTAIN MINIMUM 10' HORIZONTAL SEPARATION BETWEEN PROPOSED SEWER MAIN AND EXISTING AND PROPOSED WATER MAIN.

50 0 50 100
SCALE IN FEET

FAY SPOFFORD AND THORNDIKE, LLC

STATE OF NEW HAMPSHIRE
DEPARTMENT OF TRANSPORTATION • BUREAU OF BRIDGE DESIGN

SANITARY SEWER REPLACEMENT PROFILE AND NOTES

DGN	STATE PROJECT NO.	SHEET NO.	TOTAL SHEETS
	14957	121	157

REVISIONS AFTER PROPOSAL

NUMBER	STATION	DESCRIPTION	DATE

SDR PROCESSED	ARM	DATE 08/11
NEW DESIGN	RHD	DATE 05/13
SHEET CHECKED	BES	DATE 05/13
AS BUILT DETAILS		DATE

REVISIONS AFTER PROPOSAL

NUMBER	DATE	STATION	STATION	DESCRIPTION

SDR PROCESSED ARM	DATE 08/11	
NEW DESIGN DEM	DATE 05/13	
SHEET CHECKED TAT	DATE 05/13	
AS BUILT DETAILS	DATE	

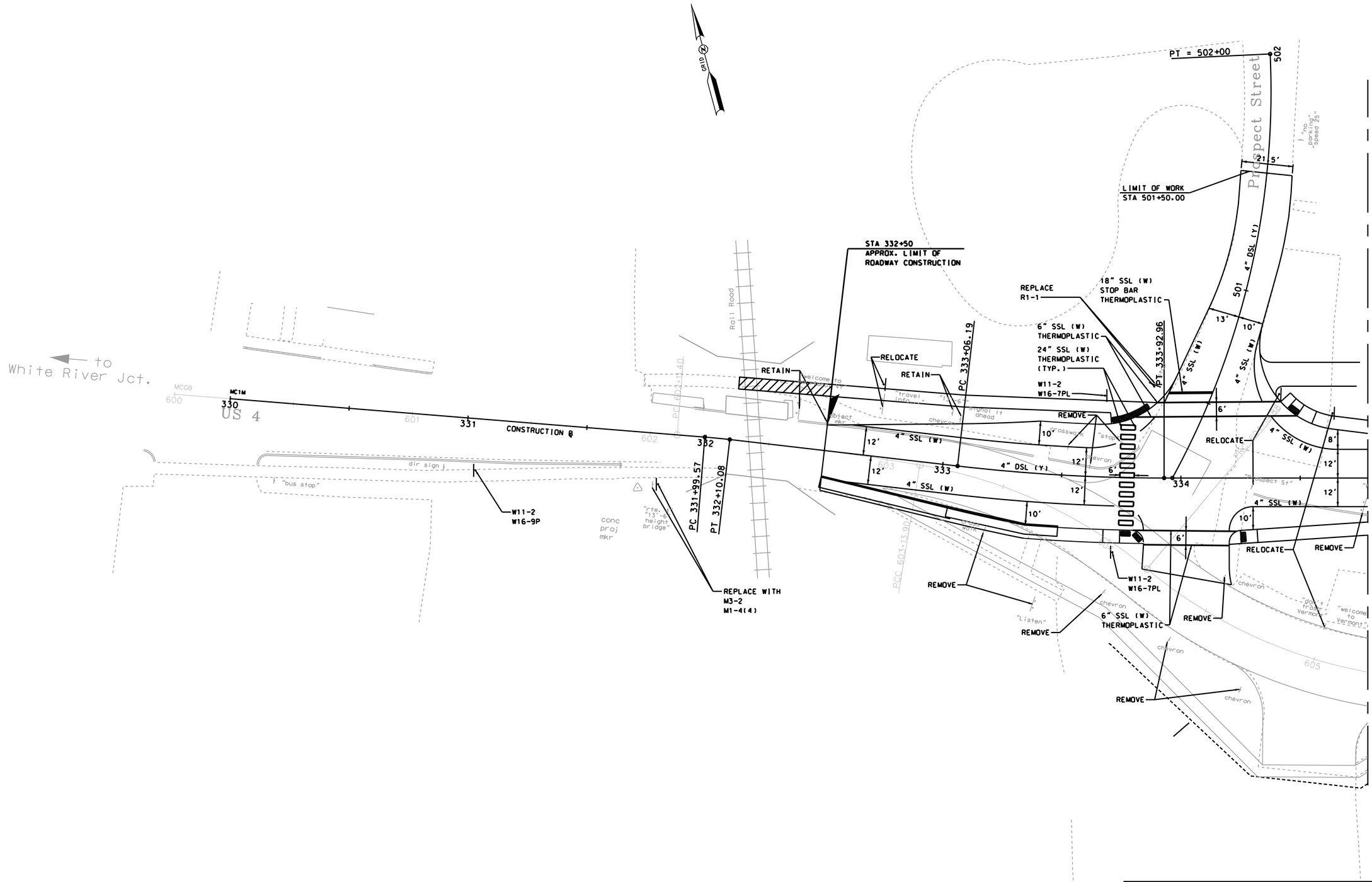

20 0 20 40
SCALE IN FEET

FAY SPOFFORD AND THORNDIKE, LLC

STATE OF NEW HAMPSHIRE

DEPARTMENT OF TRANSPORTATION • BUREAU OF BRIDGE DESIGN

PAVEMENT MARKING AND SIGNAGE PLANS

DGN	STATE PROJECT NO.	SHEET NO.	TOTAL SHEETS
PVM-1	14957	122	157

REVISIONS AFTER PROPOSAL

STATION	STATION	NUMBER	DATE	DESCRIPTION

SDR PROCESSED	ARM	DATE 08/11
NEW DESIGN	DEM	DATE 05/13
SHEET CHECKED	TAT	DATE 05/13
AS BUILT DETAILS		DATE

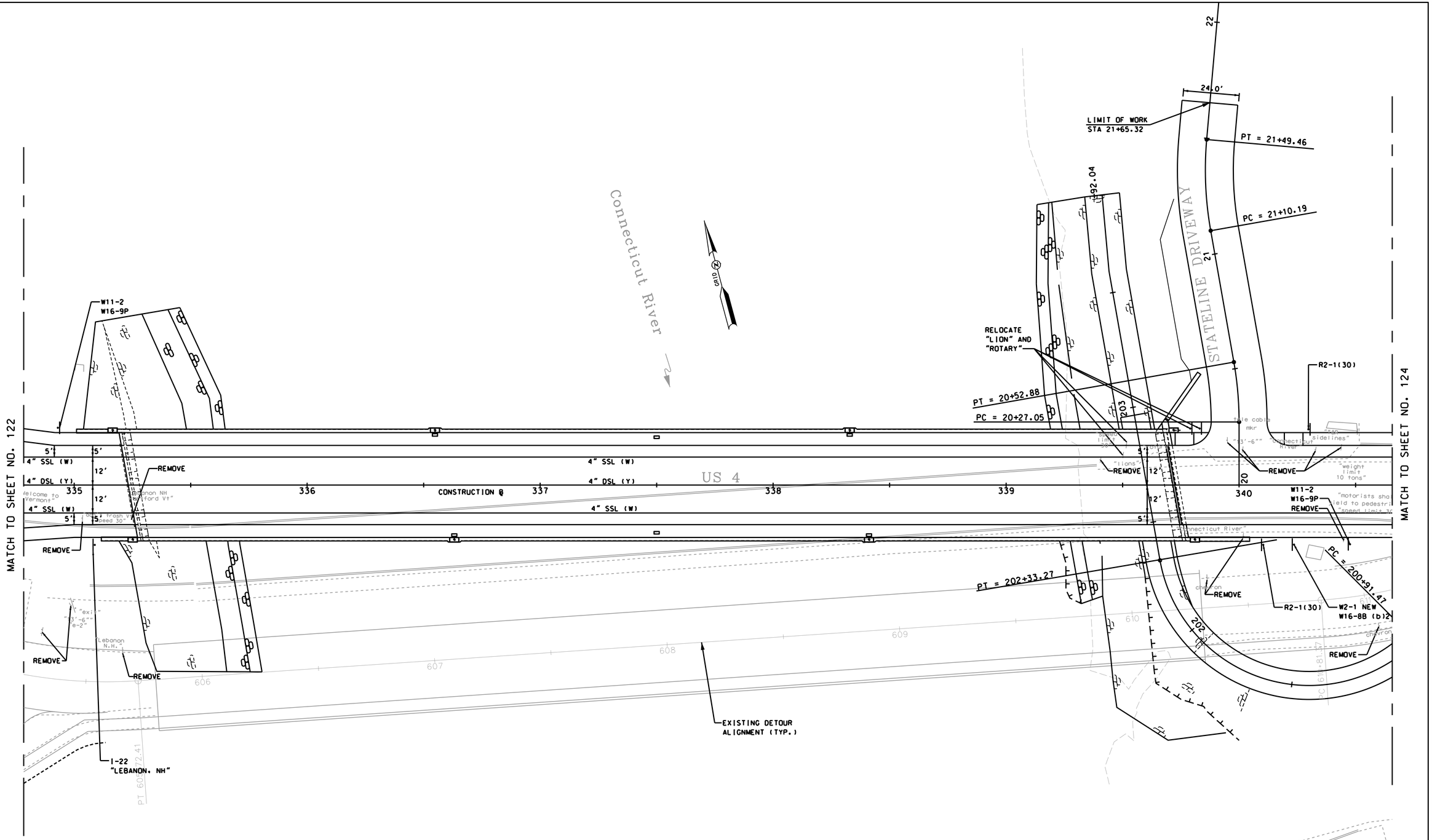

20 0 20 40
SCALE IN FEET

FAY SPOFFORD AND THORNDIKE, LLC

STATE OF NEW HAMPSHIRE

DEPARTMENT OF TRANSPORTATION • BUREAU OF BRIDGE DESIGN

PAVEMENT MARKING AND SIGNAGE PLANS

DGN	STATE PROJECT NO.	SHEET NO.	TOTAL SHEETS
PVM-2	14957	123	157

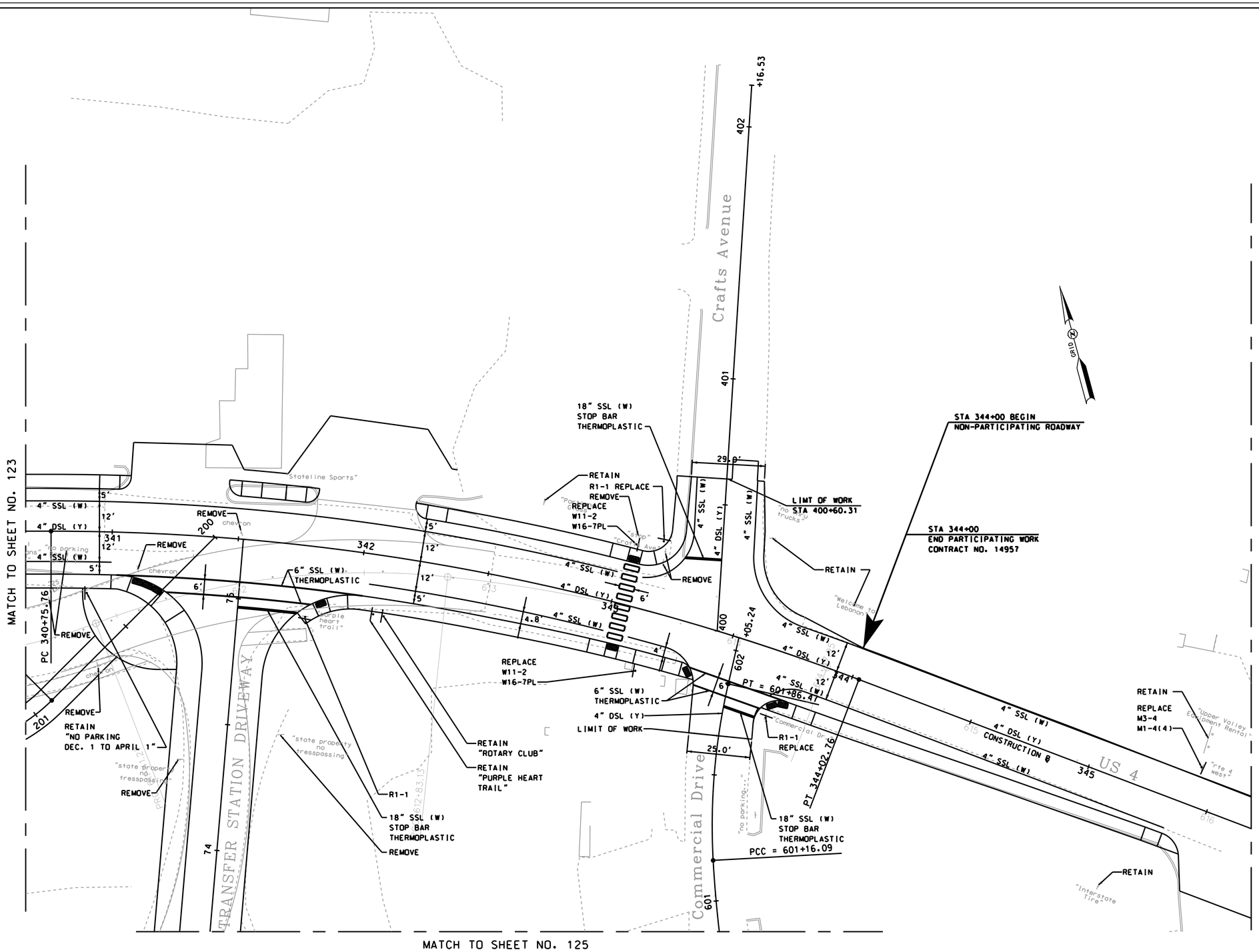

20 0 20 40
SCALE IN FEET

FAY SPOFFORD AND THORNDIKE, LLC

STATE OF NEW HAMPSHIRE

DEPARTMENT OF TRANSPORTATION • BUREAU OF BRIDGE DESIGN

PAVEMENT MARKING AND SIGNAGE PLANS

DGN	STATE PROJECT NO.	SHEET NO.	TOTAL SHEETS
PVM-3	14957	124	157

REVISIONS AFTER PROPOSAL

NUMBER	DATE	STATION	STATION	DESCRIPTION

SDR PROCESSED	ARM	DATE 08/11
NEW DESIGN	DEM	DATE 05/13
SHEET CHECKED	TAT	DATE 05/13
AS BUILT DETAILS		DATE

MATCH TO SHEET NO. 123

MATCH TO SHEET NO. 124

12.0' 12.0'

PT = 73+34.57

73

PC = 72+71.73

N 7°-51'-8.9" E

12.0' 12.0'

PT = 72+08.25

72

PC = 71+38.57

71

N 18°-45'-44.0" W

CONSTRUCTION ℄ 70

STA 71+00
APPROX. LIMIT OF
ROADWAY CONSTRUCTION

Commercial Drive

1 story
concrete block

Connecticut River

TRANSFER STATION DRIVEWAY

"state property"
no trespassing

GRID N

20 0 20 40

SCALE IN FEET

FAY SPOFFORD AND THORNDIKE, LLC

STATE OF NEW HAMPSHIRE

DEPARTMENT OF TRANSPORTATION • BUREAU OF BRIDGE DESIGN

PAVEMENT MARKING AND SIGNAGE PLANS

DGN	STATE PROJECT NO.	SHEET NO.	TOTAL SHEETS
PVM-4	14957	125	157

REVISIONS AFTER PROPOSAL

NUMBER	DATE	STATION	DESCRIPTION	STATION

SDR PROCESSED ARM	DATE 08/11	
NEW DESIGN DEM	DATE 05/13	
SHEET CHECKED TAT	DATE 05/13	
AS BUILT DETAILS	DATE	

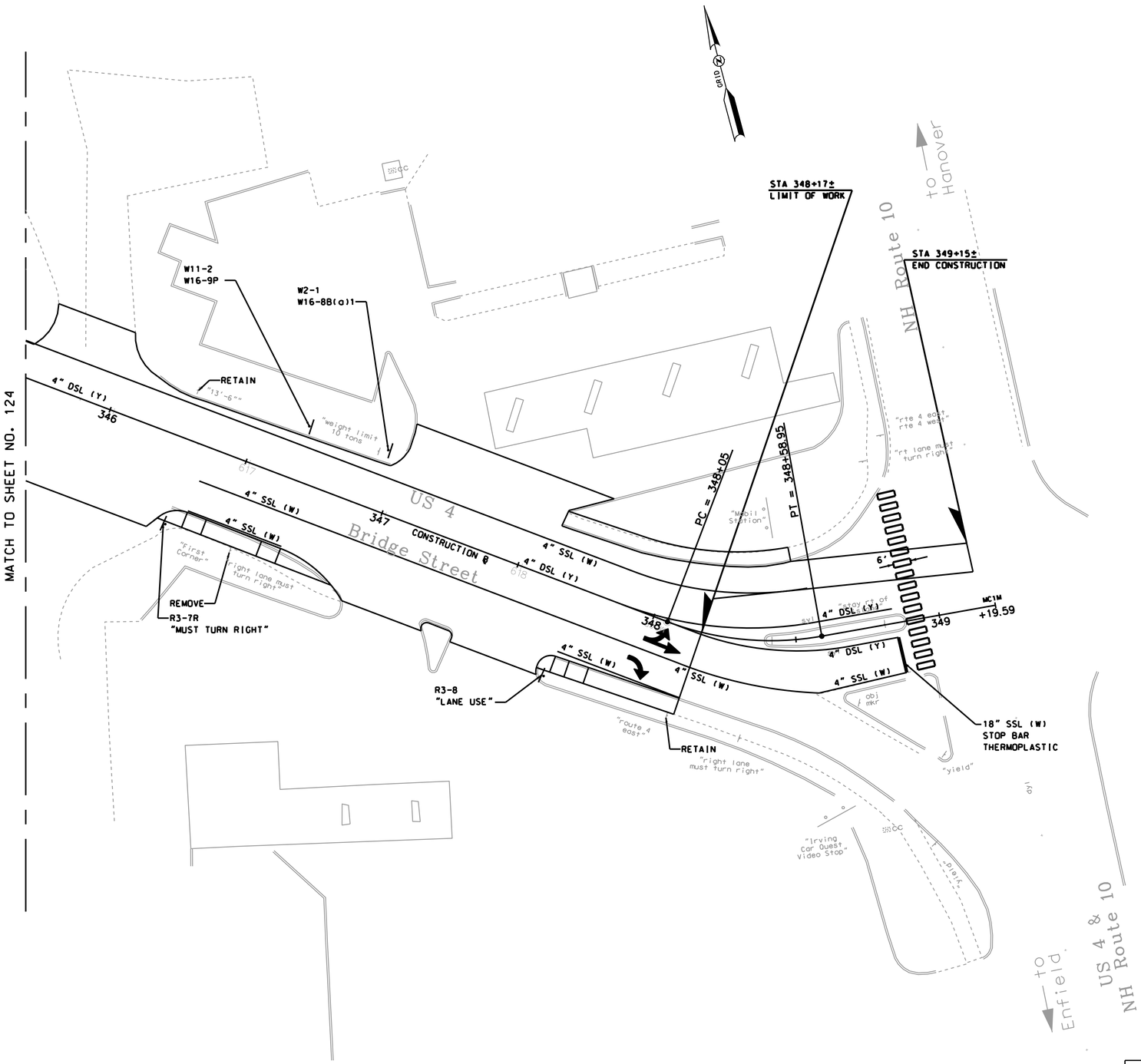

20 0 20 40

SCALE IN FEET

FAY SPOFFORD AND THORNDIKE, LLC

STATE OF NEW HAMPSHIRE

DEPARTMENT OF TRANSPORTATION • BUREAU OF BRIDGE DESIGN

PAVEMENT MARKING AND SIGNAGE PLANS

DGN	STATE PROJECT NO.	SHEET NO.	TOTAL SHEETS
PVM-5	14957	126	157

REVISIONS AFTER PROPOSAL

NUMBER	DATE	STATION	STATION	DESCRIPTION

SDR PROCESSED	ARM	DATE 08/11
NEW DESIGN	DEM	DATE 05/13
SHEET CHECKED	TAT	DATE 05/13
AS BUILT DETAILS		DATE

ITEM #	IDENT #	SIGN SIZE WIDTH (inch)	SIGN SIZE HEIGHT (inch)	TEXT	TEXT DIMENSIONS LETTER HEIGHT (inch) UC	LC	CAPS	SHIELD SIZE (inch)	ARROW (inch)	NUMERAL (inch)	# SIGNS REQ'D	SIGN AREA (SQ. FT.) NOM AREA	TOTAL AREA	POSTS PER SIGN BREAKAWAY	STEEL I-BEAM	CONCRETE BASE	4" OD ALUMINUM	U-CHANNEL-GALV.	REMARKS
615.03	M1-4	24	24	4						12D	2	4.00	8.00					1	WHITE/BLACK
615.06	M3-2	24	12	EAST			7,6C				1	2.00	2.00						WHITE/BLACK MOUNT ABOVE M1-4
615.06	M3-4	24	12	WEST			7,6C				1	2.00	2.00						WHITE/BLACK MOUNT ABOVE M1-4
615.03	R2-1(30)	24	30	SPEED LIMIT 30			4E 4E			10E	2	5.00	10.00					1	WHITE/BLACK
615.03	R3-8	36	30	ONLY			4D				1	7.50	7.50					1	WHITE/BLACK
615.03	R1-1	30	30	STOP			10C				4	6.25	25.00					1	WHITE/RED
615.03	W11-2	30	30								8	6.25	50.00					1	BLACK / YELLOW
615.06	W16-7PL	24	12						13.375 210°		4	2.00	8.00						BLACK/YELLOW MOUNT BELOW W11-2
615.06	W16-9P	24	12	AHEAD			5C				4	2.00	8.00						BLACK / YELLOW MOUNT BELOW W11-2
615.03	W2-1	30	30								2	6.25	12.50					1	BLACK/YELLOW

ITEM #	IDENT#	SIGN SIZE WIDTH (inch)	SIGN SIZE HEIGHT (inch)	TEXT	TEXT DIMENSIONS LETTER HEIGHT (inch) UC	LC	CAPS	SHIELD SIZE (inch)	ARROW (inch)	NUMERAL (inch)	# SIGNS REQ'D	SIGN AREA (SQ. FT.) NOM AREA	TOTAL AREA	POSTS PER SIGN BREAKAWAY	STEEL I-BEAM	CONCRETE BASE	4" OD ALUMINUM	U-CHANNEL-GALV.	REMARKS
615.06	W16-8B(M)1	36	16	← COMMERCIAL DR CRAFTS AVE →	4B 4B				4X4 4X4		1	4.00	4.00						BLACK /YELLOW MOUNT BELOW W2-1
615.06	W16-8B(M)2	36	16	← CRAFTS AVE COMMERCIAL DR →	4B 4B				4X4 4X4		1	4.00	4.00						BLACK / YELLOW MOUNT BELOW W2-1
615.03	I-22	8	48	LEBANON GRAFTON			3D				1	2.67	2.67					1	GREEN/WHITE
615.06	R3-7R	30	30	RIGHT LANE MUST TURN RIGHT			4C 5C 4C				1	6.25	6.25					1	BLACK/WHITE

GENERAL NOTES

1. REFER TO THE 2010 STANDARD SPECIFICATIONS FOR ROAD AND BRIDGE CONSTRUCTION PUBLISHED BY THE NHDOT.
2. NOTE NEW REFLECTIVITY REQUIREMENTS IN THE 2006 STANDARD SPECIFICATIONS FOR ROAD AND BRIDGE CONSTRUCTION SECTION 718 PUBLISHED BY THE NHDOT.
3. REFER TO THE LATEST EDITION OF THE STANDARD PLANS FOR ROAD AND BRIDGE CONSTRUCTION AS PUBLISHED BY THE NHDOT FOR EXACT DETAILS OF PERMANENT SIGNING STANDARDS AND NHDOT SPECIFIC SIGNS.
4. REFER TO THE LATEST EDITION OF THE STANDARD HIGHWAY SIGNS MANUAL AS PUBLISHED BY THE USDOT-FHWA FOR EXACT DETAILS OF BORDERS, ETC.
5. U-CHANNEL POSTS INSTALLED IN CONCRETE ISLANDS SHALL HAVE A SIGN SUPPORT (BREAK-OUT) SYSTEM.

NUMBER	DATE	STATION	STATION	DESCRIPTION
REVISIONS AFTER PROPOSAL				

SDR PROCESSED ARM DATE 08/11
NEW DESIGN DEM DATE 05/13
SHEET CHECKED TAT DATE 05/13
AS BUILT DETAILS DATE

STATE OF NEW HAMPSHIRE
DEPARTMENT OF TRANSPORTATION • BUREAU OF BRIDGE DESIGN

SIGN TEXT LAYOUT

FAY SPOFFORD AND THORNDIKE, LLC

DGN	STATE PROJECT NO.	SHEET NO.	TOTAL SHEETS
	14957	127	157

HARTFORD, VT

LEBANON, NH

STA 332+50
BEGIN CONSTRUCTION

STA 501+50
LIMIT OF WORK

Prospect St.

Rail Road

501

335

Connecticut River

GRID

Stateline Sports Driveway

STA 21+65.32
LIMIT OF WORK

340

STA 400+60.31
LIMIT OF WORK

STA 344+00 BEGIN
NON-PARTICIPATING
ROADWAY WORK

401 Crafts Avenue

STA 344+00
END PARTICIPATING
ROADWAY WORK
CONTRACT NO. 14957

Commercial Drive
601

VERMONT
NEW HAMPSHIRE

TEMPORARY
US 4 ALIGNMENT
(IN USE)

Transfer Station
Driveway
02

STA 71+00
LIMIT OF WORK

50 0 50 100
SCALE IN FEET

CONSTRUCTION PHASING NOTES:

PHASE 1A:
1. MAINTAIN TRAFFIC ON CURRENT DETOUR ALIGNMENT
2. DEMOLISH EXISTING BRIDGE
3. CONSTRUCT NEW BRIDGE
4. CONSTRUCT BRIDGE APPROACHES TO THE EASTERN LIMIT OF PROSPECT STREET IN VERMONT AND IN NH ALONG EDGE OF DETOUR INCLUDING WESTERLY DRIVE INTO STATELINE SPORTS. INCLUDE ALL WORK UP TO BINDER COURSE OF PAVEMENT.
5. ALL WORK SHOULD TAKE PLACE OUT OF CURRENTLY USED TRAVELED WAY AND SHOULDER

PHASE 1B:
1. MAINTAIN TRAFFIC ON CURRENT DETOUR ALIGNMENT
2. CONSTRUCT UNDERGROUND UTILITIES OUTSIDE OF PHASE 1A LIMITS. INCLUDING SEWER. WATER. AND DRAINAGE INFRASTRUCTURE.
3. CONSTRUCT ROADWAY BOX AND PAVE TO BINDER. CURBING. SIDEWALK. AND TIE-IN WORK.
4. UTILIZE ALTERNATING ONE-WAY TRAFFIC WHEN NECESSARY.

PHASE 2:
1. MAINTAIN TRAFFIC ON CURRENT DETOUR ALIGNMENT
2. CONSTRUCT THE TRANSITION AREAS WHERE THE EXISTING DETOUR ALIGNMENT MERGES INTO THE FINAL US 4 ALIGNMENT.
3. UTILIZE ALTERNATING ONE-WAY TRAFFIC.

PHASE 3:
1. TRANSITION TRAFFIC ONTO PROPOSED ALIGNMENT
2. DEMOLISH DETOUR BRIDGE AND ROADWAY

PHASE 4:
1. MAINTAIN TRAFFIC ON PROPOSED ALIGNMENT
2. GRADE OUT AREAS TO FINAL CONFIGURATION UNDER DETOUR ALIGNMENT AND CONSTRUCT RIPRAP BANK STANBILIZATION.
3. GRADE AND PAVE LISTEN. INC. PARKING AREA.
4. CONSTRUCT FINAL CORRIDOR WIDE PAVEMENT OVERLAY.

LEGEND

- PHASE 1A
- PHASE 1B
- PHASE 2
- PHASE 3

REVISIONS AFTER PROPOSAL			
STATION	STATION	NUMBER	DATE	DESCRIPTION

SDR PROCESSED	ARM	DATE 08/11
NEW DESIGN	DEM	DATE 05/13
SHEET CHECKED	TAT	DATE 05/13
AS BUILT DETAILS		DATE

FAY SPOFFORD AND THORNDIKE, LLC

STATE OF NEW HAMPSHIRE

DEPARTMENT OF TRANSPORTATION • BUREAU OF BRIDGE DESIGN

CONSTRUCTION PHASING PLAN

DGN	STATE PROJECT NO.	SHEET NO.	TOTAL SHEETS
	14957	128	157

REVISIONS AFTER PROPOSAL

NUMBER	DATE	STATION	STATION	DESCRIPTION

SDR PROCESSED	ARM	DATE 08/11
NEW DESIGN	DEM	DATE 05/13
SHEET CHECKED	TAT	DATE 05/13
AS BUILT DETAILS		DATE

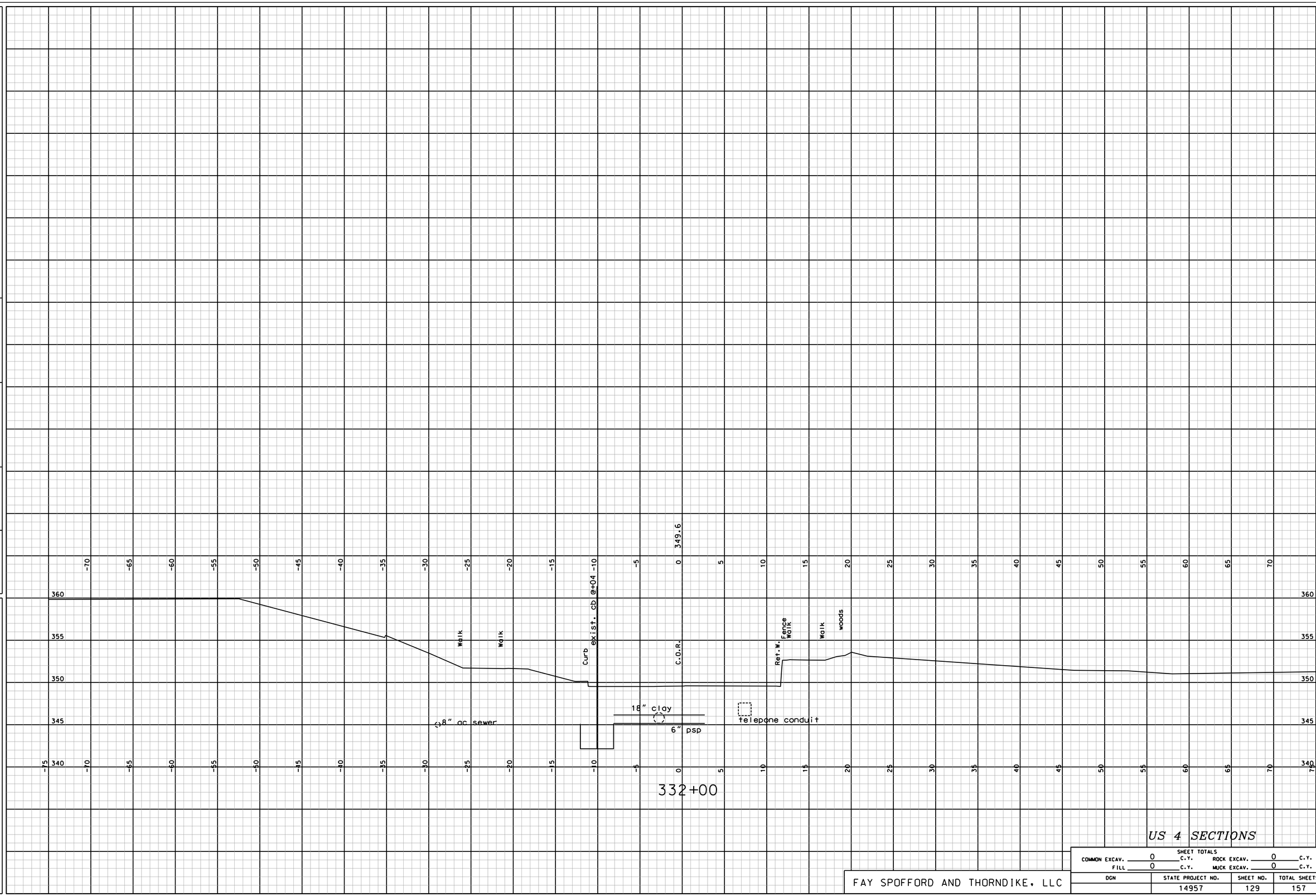

US 4 SECTIONS

SHEET TOTALS			
COMMON EXCAV.	0 C.Y.	ROCK EXCAV.	0 C.Y.
FILL	0 C.Y.	MUCK EXCAV.	0 C.Y.

FAY SPOFFORD AND THORNDIKE, LLC

DGN	STATE PROJECT NO.	SHEET NO.	TOTAL SHEETS
	14957	129	157

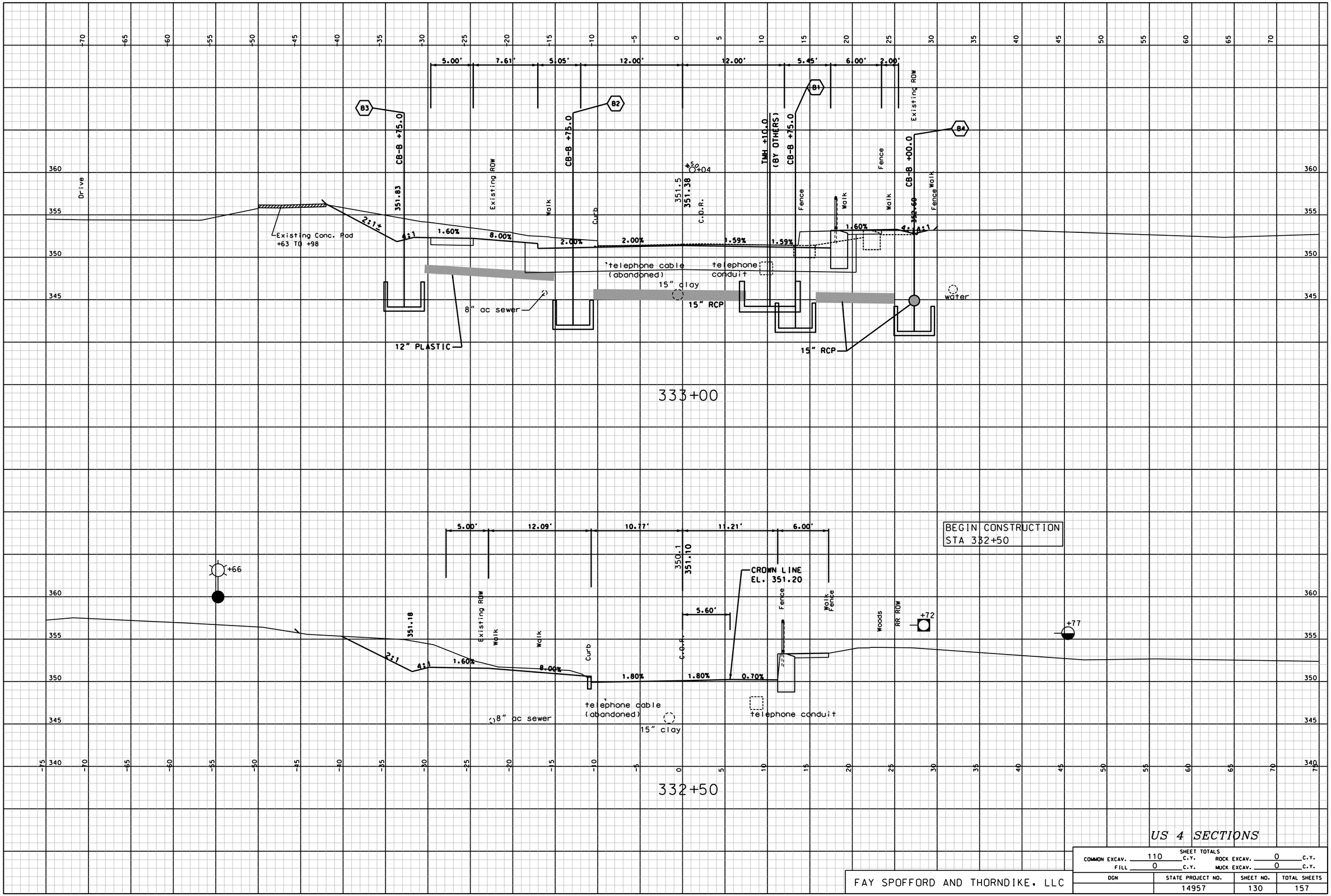

US 4 SECTIONS

SHEET TOTALS			
COMMON EXCAV. 110 C.Y.		ROCK EXCAV. 0 C.Y.	
FILL 0 C.Y.		MUCK EXCAV. 0 C.Y.	
DGN	STATE PROJECT NO.	SHEET NO.	TOTAL SHEETS
	14957	130	157

FAY SPOFFORD AND THORNDIKE, LLC

NUMBER	DATE	STATION	STATION	DESCRIPTION

REVISIONS AFTER PROPOSAL

SDR PROCESSED	ARM	DATE	08/11
NEW DESIGN	DEM	DATE	05/13
SHEET CHECKED	TAT	DATE	05/13
AS BUILT DETAILS		DATE	

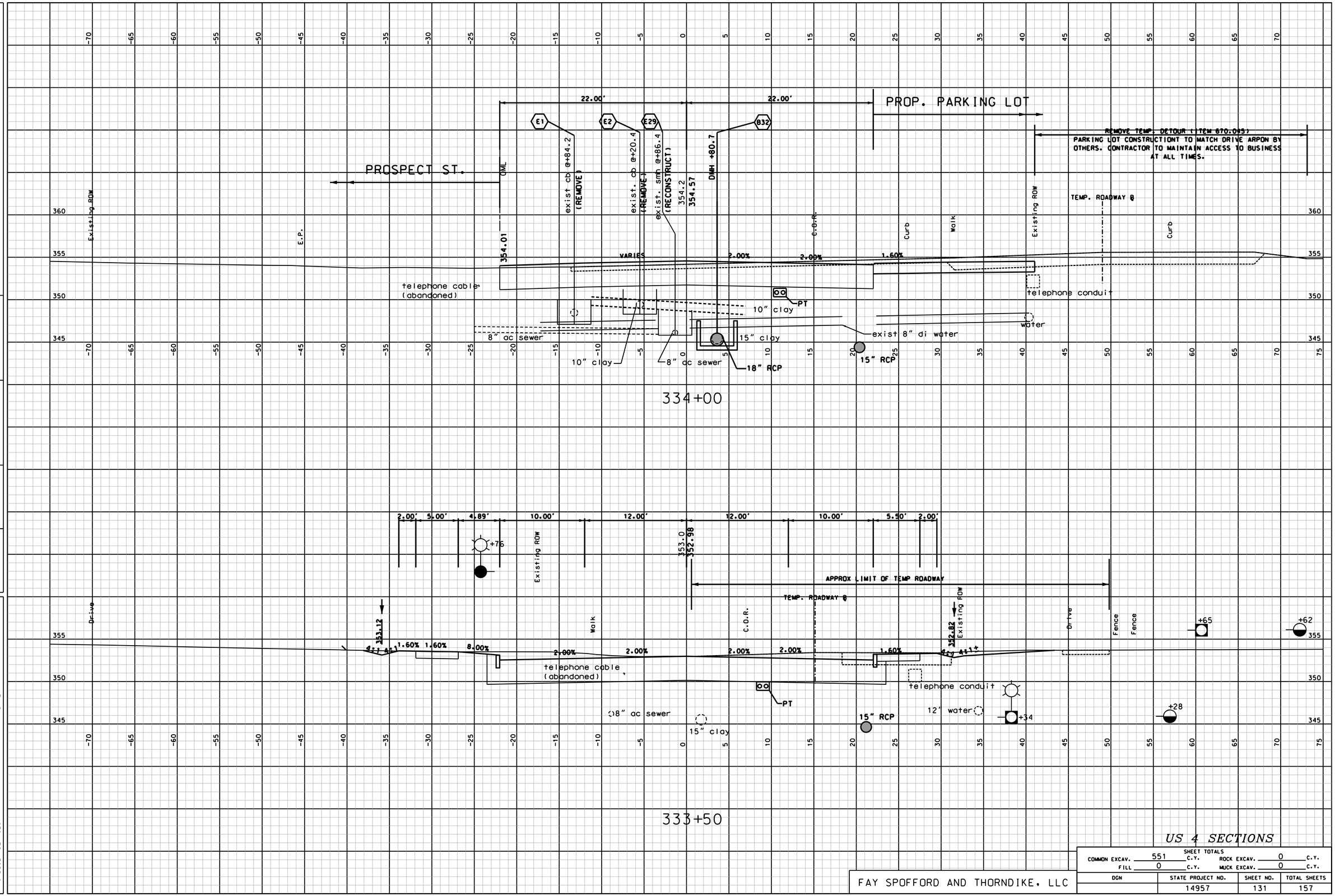

US 4 SECTIONS

SHEET TOTALS			
COMMON EXCAV. 551 C.Y.	ROCK EXCAV. 0 C.Y.		
FILL 0 C.Y.	MUCK EXCAV. 0 C.Y.		
DGN	STATE PROJECT NO.	SHEET NO.	TOTAL SHEETS
	14957	131	157

FAY SPOFFORD AND THORNDIKE, LLC

NUMBER	DATE	STATION	STATION	DESCRIPTION

REVISIONS AFTER PROPOSAL

SDR PROCESSED	ARM	DATE	08/11
NEW DESIGN	DEM	DATE	05/13
SHEET CHECKED	TAT	DATE	05/13
AS BUILT DETAILS		DATE	

US 4 BRIDGE - STA 335+25 TO 339+71

2.50' 5.50' 5.00' 12.00' 12.00' 5.00' 5.50' 2.50'

B10 DMH +75.6 | B8 WOU +75.6 | B7 CB-F +75.6 | B9 CB-F +75.6

352.8 357.75

Building | Building | Building | Existing ROW | C.O.R. | Walk | Existing ROW

APPROX LIMIT OF TEMP ROADWAY

+31 +33 +33 +12 +32 +17 +35 +93 +87 +88 +93 +87

tmh +07 | bgr | telephone conduit | water

4:1 1.60% 2.00% 2.00% 2.00% 2.00% 1.60% 4:1 4:1

PT

18" RCP
24" SLOPE DRAIN
18" cmp
18" RCP
18" PLASTIC
18" PLASTIC
15" RCP
18" RCP

335+00

4.63' 2.00' 6.65' 13.19' 12.00' 12.00' 8.33' 5.51' 2.50'

MAINTENANCE ACCESS DRIVE
10.00'

B6 CB-F +55.4 | E3 | B5 CB-F +30.0 | B33 CB-F +30.0

353.7 356.16

Existing ROW | Drive | Existing ROW | Curb exist. dmh @+34.0 (REMOVE) | C.O.R. | Existing ROW

APPROX LIMIT OF TEMP ROADWAY

+72 +71 +62 +73

355.26

6:1 2.00% 4:1 1.60% 2.00% 2.00% 2.00% 2.00% 1.60% 1.0% 4:1 4:1

PT

telephone conduit | water | water

18" RCP
15" RCP
15" clay
15" RCP
18" RCP
12" PLASTIC

334+50

US 4 SECTIONS

SHEET TOTALS			
COMMON EXCAV. 288 C.Y.		ROCK EXCAV. 0 C.Y.	
FILL 107 C.Y.		MUCK EXCAV. 0 C.Y.	
DGN	STATE PROJECT NO.	SHEET NO.	TOTAL SHEETS
	14957	132	157

FAY SPOFFORD AND THORNDIKE, LLC

NUMBER	DATE	STATION	DESCRIPTION

REVISIONS AFTER PROPOSAL

SDR PROCESSED	ARM	DATE 08/11
NEW DESIGN	DEM	DATE 05/13
SHEET CHECKED	TAT	DATE 05/13
AS BUILT DETAILS		DATE

REVISIONS AFTER PROPOSAL

NUMBER	DATE	STATION	STATION	DESCRIPTION

SDR PROCESSED	ARM	DATE	08/11
NEW DESIGN	DEM	DATE	05/13
SHEET CHECKED	TAT	DATE	05/13
AS BUILT DETAILS		DATE	

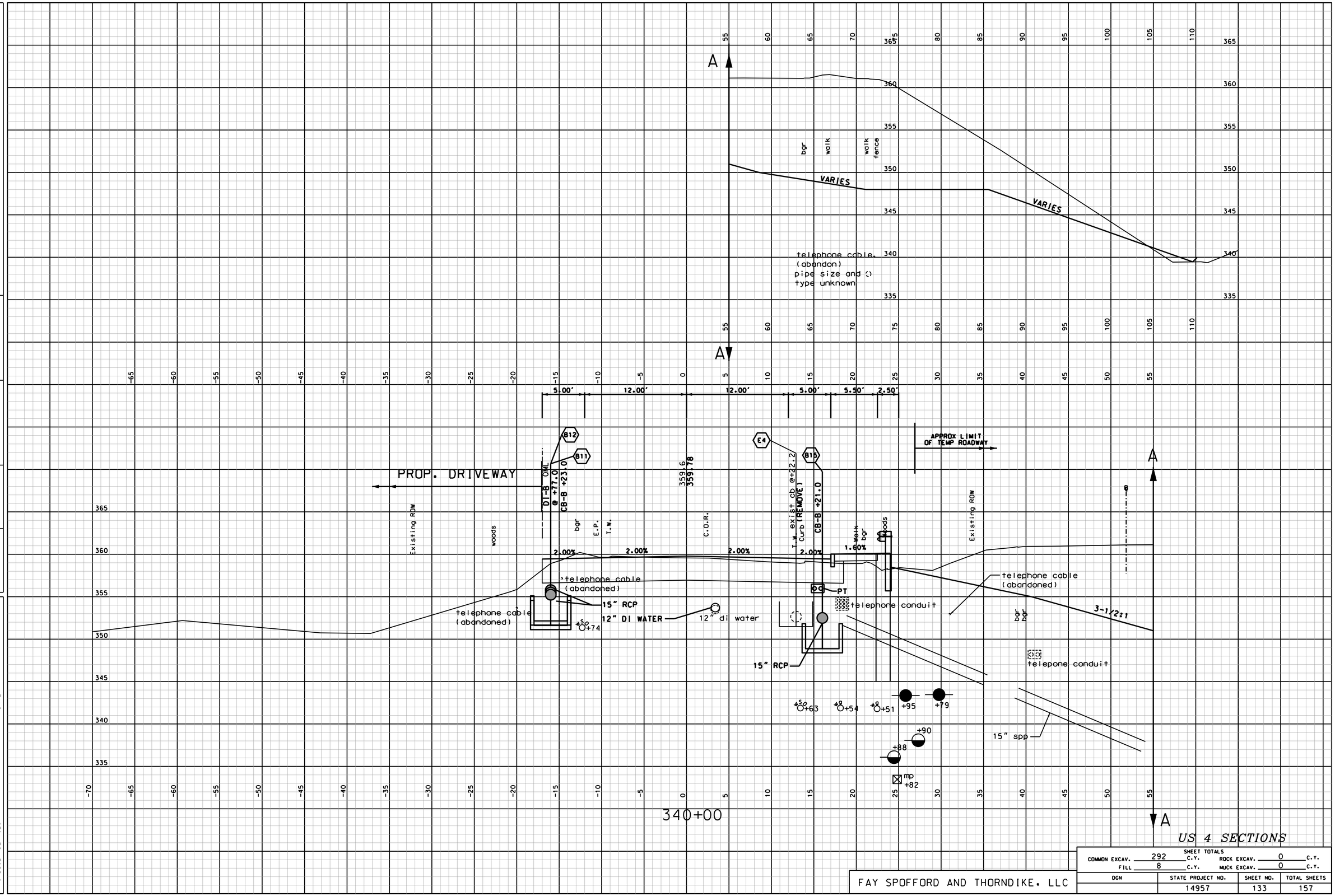

US 4 SECTIONS

SHEET TOTALS			
COMMON EXCAV.	292 C.Y.	ROCK EXCAV.	0 C.Y.
FILL	8 C.Y.	MUCK EXCAV.	0 C.Y.

FAY SPOFFORD AND THORNDIKE, LLC

DGN	STATE PROJECT NO.	SHEET NO.	TOTAL SHEETS
	14957	133	157

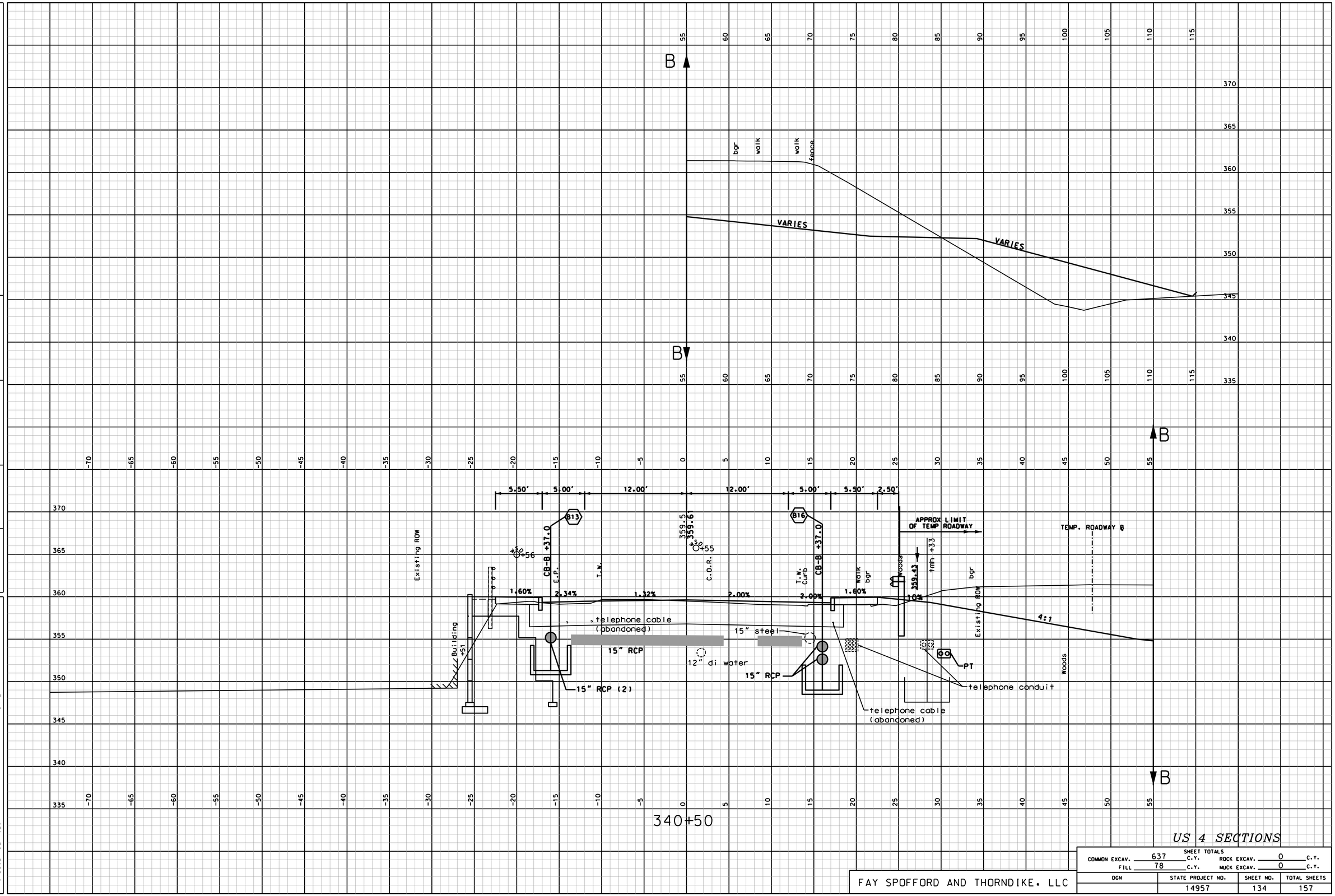

US 4 SECTIONS

SHEET TOTALS			
COMMON EXCAV.	637 C.Y.	ROCK EXCAV.	0 C.Y.
FILL	78 C.Y.	MUCK EXCAV.	0 C.Y.

DGN	STATE PROJECT NO.	SHEET NO.	TOTAL SHEETS
	14957	134	157

FAY SPOFFORD AND THORNDIKE, LLC

REVISIONS AFTER PROPOSAL

NUMBER	DATE	STATION	STATION	DESCRIPTION

		DATE
SDR PROCESSED	ARM	08/11
NEW DESIGN	DEM	05/13
SHEET CHECKED	TAT	05/13
AS BUILT DETAILS		DATE

REVISIONS AFTER PROPOSAL

NUMBER	DATE	STATION	STATION	DESCRIPTION

SDR PROCESSED	ARM	DATE	08/11
NEW DESIGN	DEM	DATE	05/13
SHEET CHECKED	TAT	DATE	05/13
AS BUILT DETAILS		DATE	

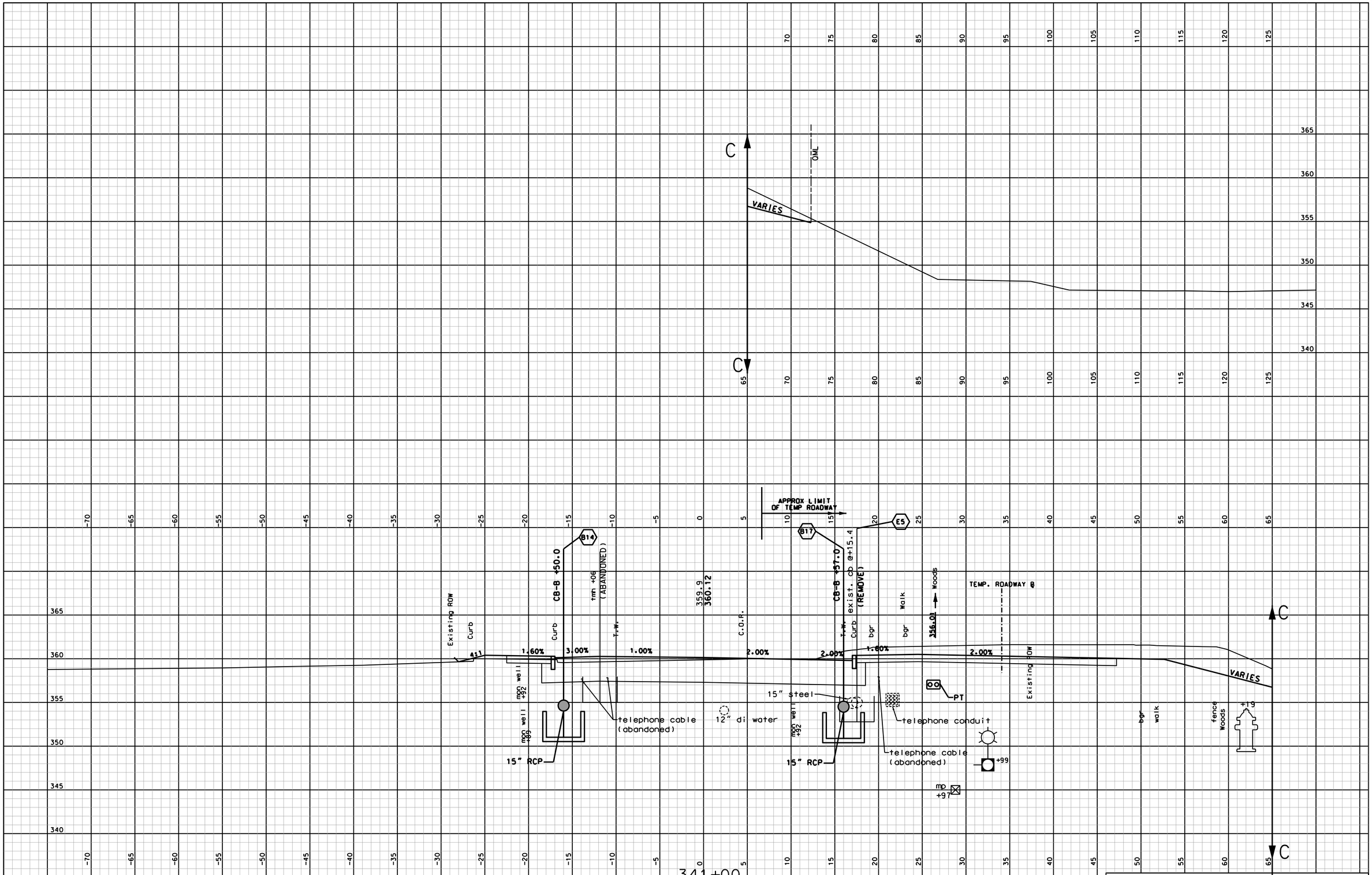

SHEET TOTALS			
COMMON EXCAV. 359 C.Y.		ROCK EXCAV. 0 C.Y.	
FILL 80 C.Y.		MUCK EXCAV. 0 C.Y.	
DGN	STATE PROJECT NO.	SHEET NO.	TOTAL SHEETS
	14957	135	157

FAY SPOFFORD AND THORNDIKE, LLC

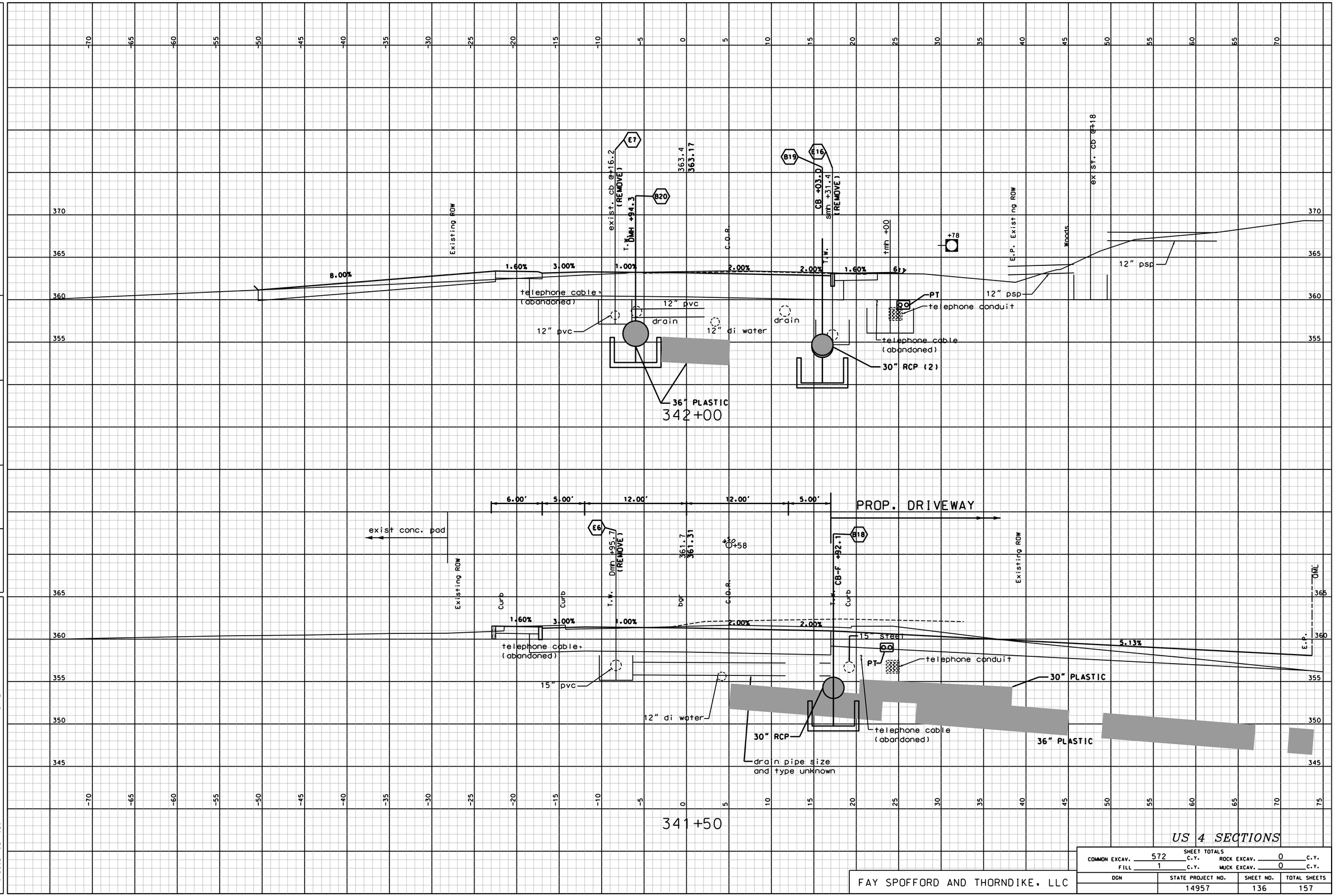

US 4 SECTIONS

SHEET TOTALS			
COMMON EXCAV. 572 C.Y.	ROCK EXCAV. 0 C.Y.		
FILL 1 C.Y.	MUCK EXCAV. 0 C.Y.		
DGN	STATE PROJECT NO.	SHEET NO.	TOTAL SHEETS
	14957	136	157

FAY SPOFFORD AND THORNDIKE, LLC

NUMBER	DATE	STATION	STATION	DESCRIPTION

REVISIONS AFTER PROPOSAL

SDR PROCESSED	ARM	DATE	08/11
NEW DESIGN	DEM	DATE	05/13
SHEET CHECKED	TAT	DATE	05/13
AS BUILT DETAILS		DATE	

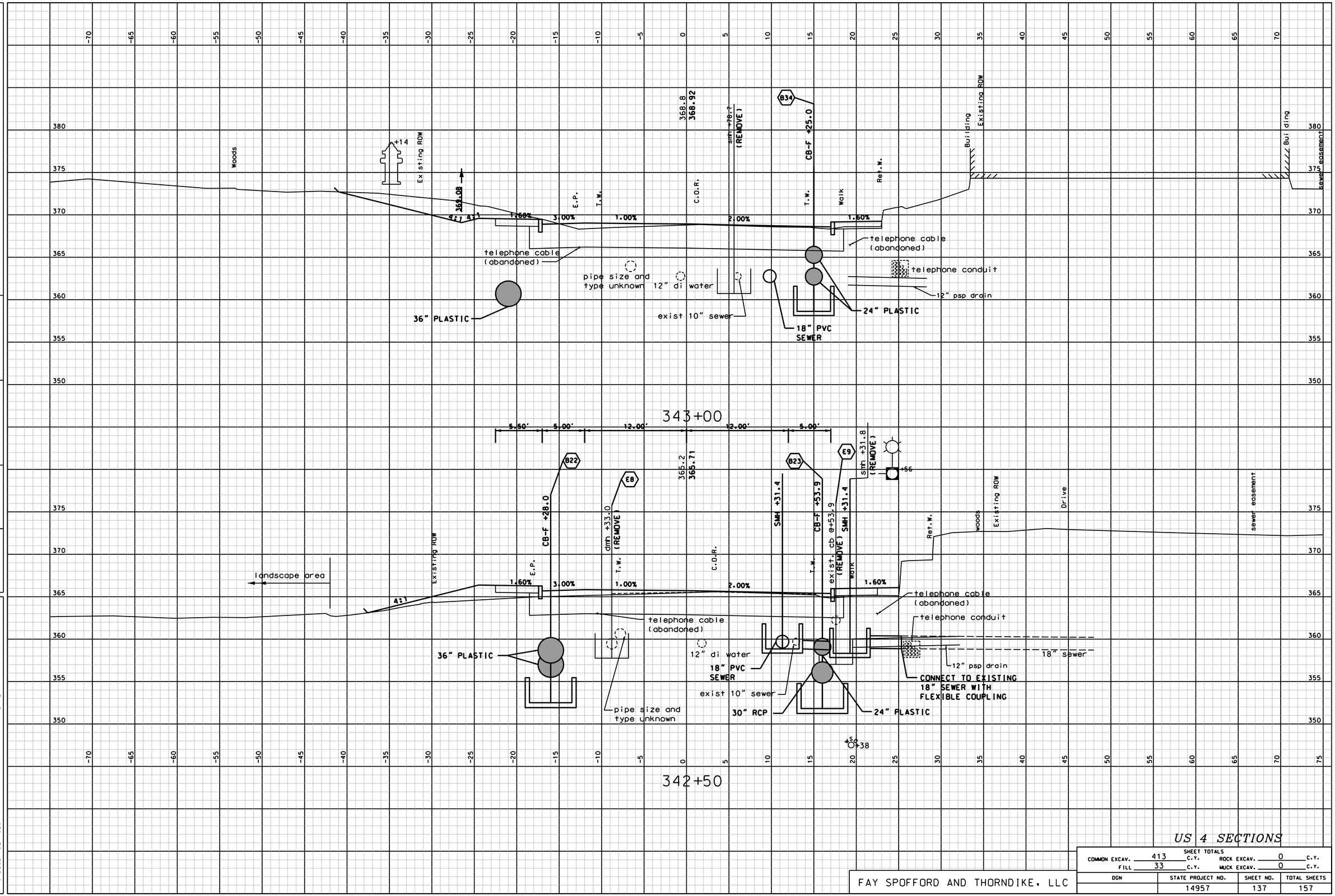

US 4 SECTIONS

SHEET TOTALS			
COMMON EXCAV.	413 C.Y.	ROCK EXCAV.	0 C.Y.
FILL	33 C.Y.	MUCK EXCAV.	0 C.Y.

FAY SPOFFORD AND THORNDIKE, LLC

DGN	STATE PROJECT NO.	SHEET NO.	TOTAL SHEETS
	14957	137	157

REVISIONS AFTER PROPOSAL

NUMBER	DATE	STATION	STATION	DESCRIPTION

SDR PROCESSED	ARM	DATE	08/11
NEW DESIGN	DEM	DATE	05/13
SHEET CHECKED	TAT	DATE	05/13
AS BUILT DETAILS		DATE	

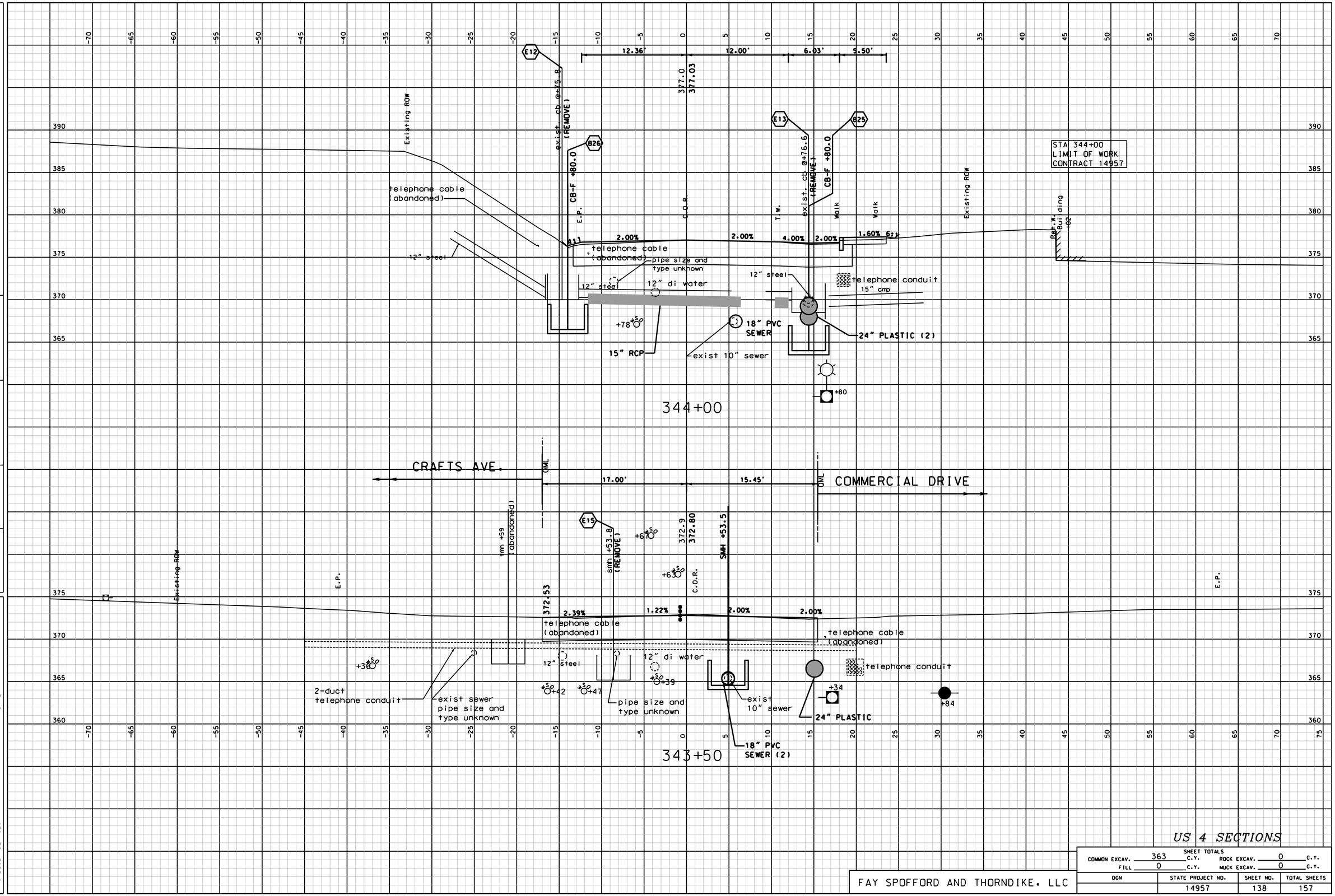

SHEET TOTALS			
COMMON EXCAV. 363 C.Y.	ROCK EXCAV. 0 C.Y.		
FILL 0 C.Y.	MUCK EXCAV. 0 C.Y.		
DGN	STATE PROJECT NO.	SHEET NO.	TOTAL SHEETS
	14957	138	157

FAY SPOFFORD AND THORNDIKE, LLC

REVISIONS AFTER PROPOSAL

NUMBER	DATE	STATION	STATION	DESCRIPTION

SDR PROCESSED	ARM	DATE 08/11
NEW DESIGN	DEM	DATE 05/13
SHEET CHECKED	TAT	DATE 05/13
AS BUILT DETAILS		DATE

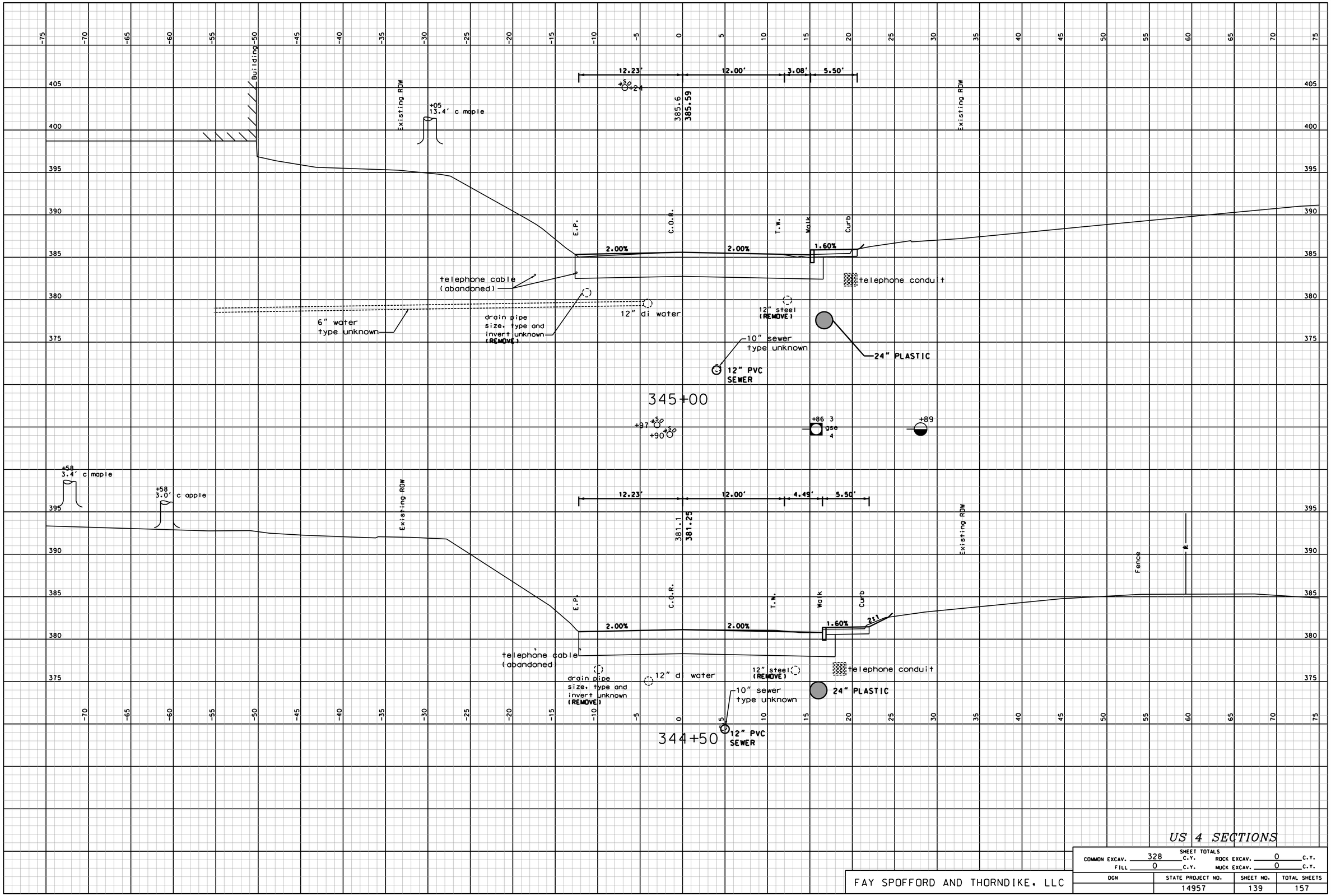

US 4 SECTIONS

SHEET TOTALS			
COMMON EXCAV. 328 C.Y.		ROCK EXCAV. 0 C.Y.	
FILL 0 C.Y.		MUCK EXCAV. 0 C.Y.	
DGN	STATE PROJECT NO.	SHEET NO.	TOTAL SHEETS
	14957	139	157

FAY SPOFFORD AND THORNDIKE, LLC

REVISIONS AFTER PROPOSAL

NUMBER	DATE	STATION	DESCRIPTION
		STATION	

		DATE
SDR PROCESSED	ARM	08/11
NEW DESIGN	DEM	05/13
SHEET CHECKED	TAT	05/13
AS BUILT DETAILS		DATE

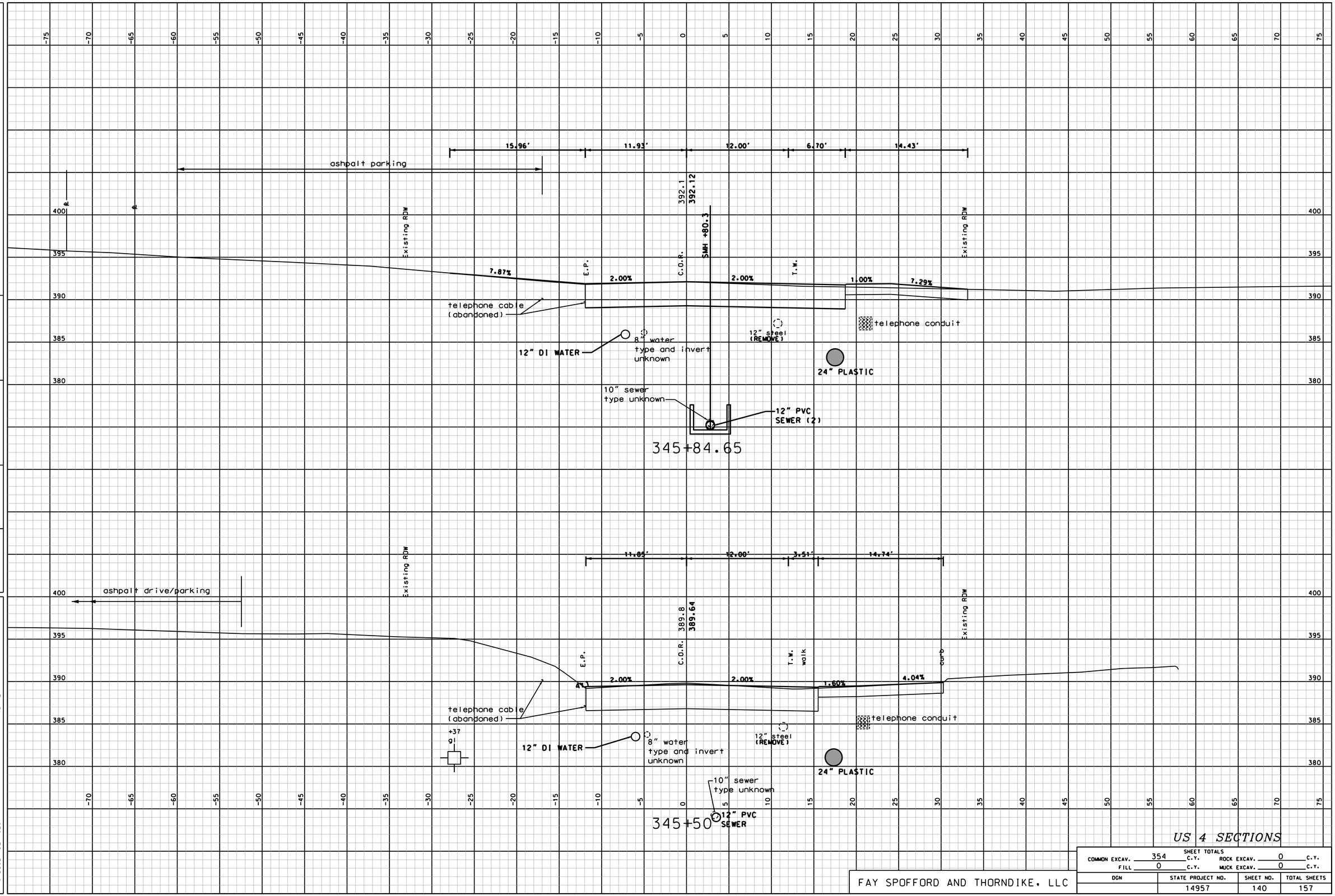

US 4 SECTIONS

SHEET TOTALS			
COMMON EXCAV. 354 C.Y.		ROCK EXCAV. 0 C.Y.	
FILL 0 C.Y.		MUCK EXCAV. 0 C.Y.	
DGN	STATE PROJECT NO.	SHEET NO.	TOTAL SHEETS
	14957	140	157

FAY SPOFFORD AND THORNDIKE, LLC

NUMBER	DATE	STATION	STATION	DESCRIPTION

REVISIONS AFTER PROPOSAL

SDR PROCESSED	ARM	DATE	08/11
NEW DESIGN	DEM	DATE	05/13
SHEET CHECKED	TAT	DATE	05/13
AS BUILT DETAILS		DATE	

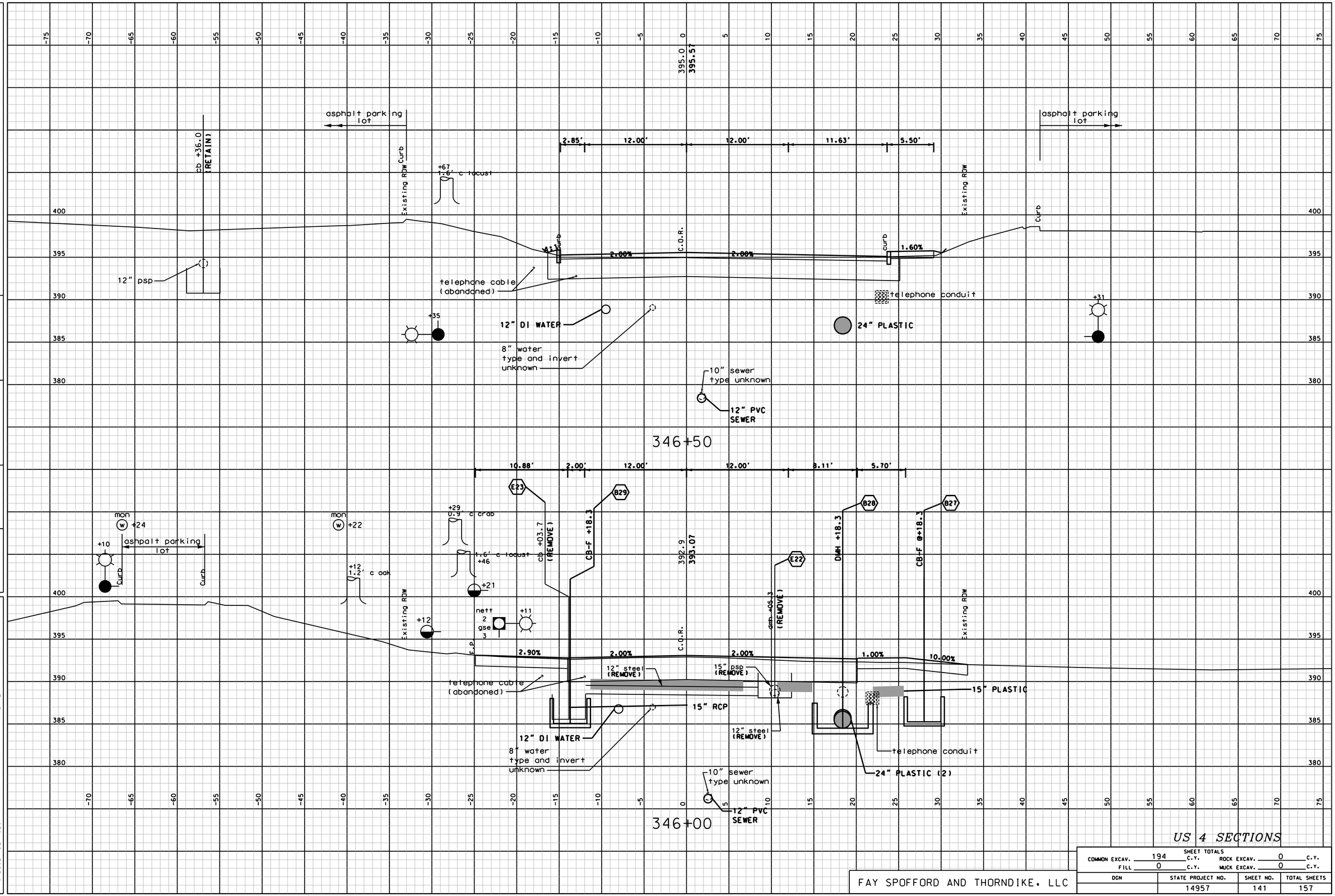

US 4 SECTIONS

SHEET TOTALS			
COMMON EXCAV. 194 C.Y.	ROCK EXCAV. 0 C.Y.		
FILL 0 C.Y.	MUCK EXCAV. 0 C.Y.		
DGN	STATE PROJECT NO.	SHEET NO.	TOTAL SHEETS
	14957	141	157

FAY SPOFFORD AND THORNDIKE, LLC

NUMBER	DATE	STATION	STATION	DESCRIPTION

REVISIONS AFTER PROPOSAL

SDR PROCESSED	ARM	DATE 08/11	
NEW DESIGN	DEM	DATE 05/13	
SHEET CHECKED	TAT	DATE 05/13	
AS BUILT DETAILS		DATE	

REVISIONS AFTER PROPOSAL

NUMBER	DATE	STATION	STATION	DESCRIPTION

SDR PROCESSED	ARM	DATE 08/11
NEW DESIGN	DEM	DATE 05/13
SHEET CHECKED	TAT	DATE 05/13
AS BUILT DETAILS		DATE

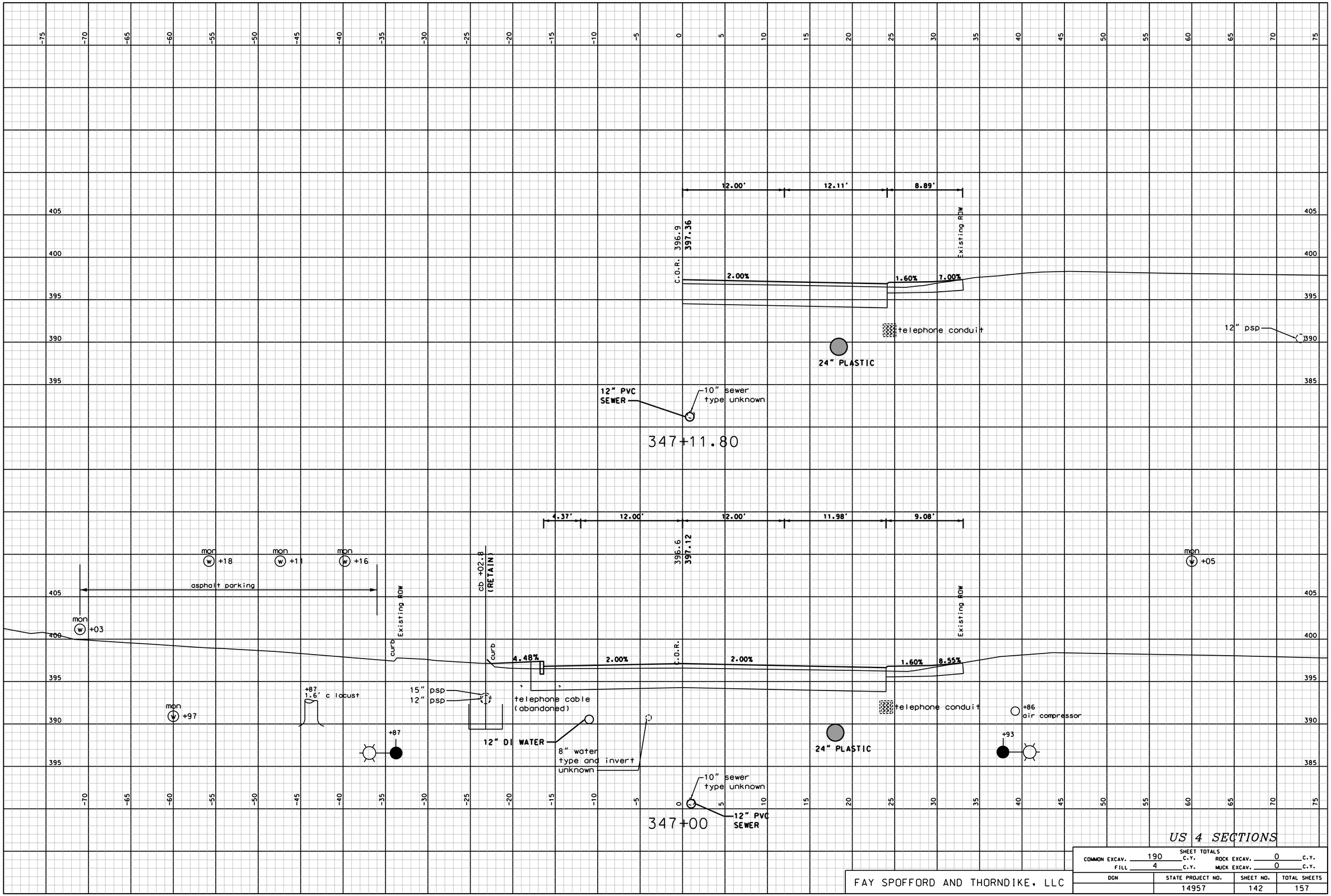

SHEET TOTALS

COMMON EXCAV.	190 C.Y.	ROCK EXCAV.	0 C.Y.
FILL	4 C.Y.	MUCK EXCAV.	0 C.Y.

FAY SPOFFORD AND THORNDIKE, LLC

DGN	STATE PROJECT NO.	SHEET NO.	TOTAL SHEETS
	14957	142	157

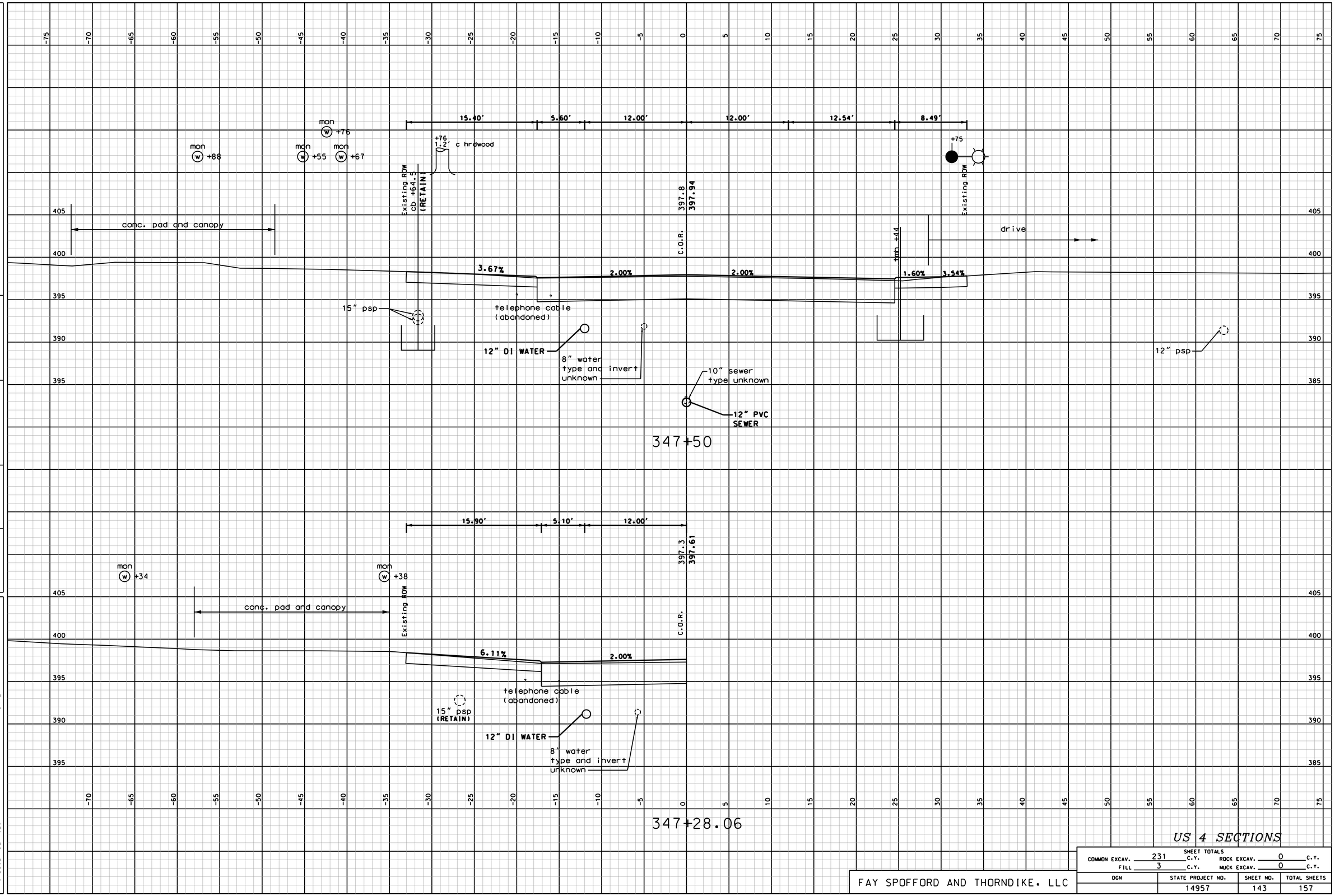

US 4 SECTIONS

SHEET TOTALS			
COMMON EXCAV.	231 C.Y.	ROCK EXCAV.	0 C.Y.
FILL	3 C.Y.	MUCK EXCAV.	0 C.Y.

DGN	STATE PROJECT NO.	SHEET NO.	TOTAL SHEETS
	14957	143	157

FAY SPOFFORD AND THORNDIKE, LLC

NUMBER	DATE	STATION	STATION	DESCRIPTION

REVISIONS AFTER PROPOSAL

SDR PROCESSED	ARM	DATE	08/11
NEW DESIGN	DEM	DATE	05/13
SHEET CHECKED	TAT	DATE	05/13

AS BUILT DETAILS DATE

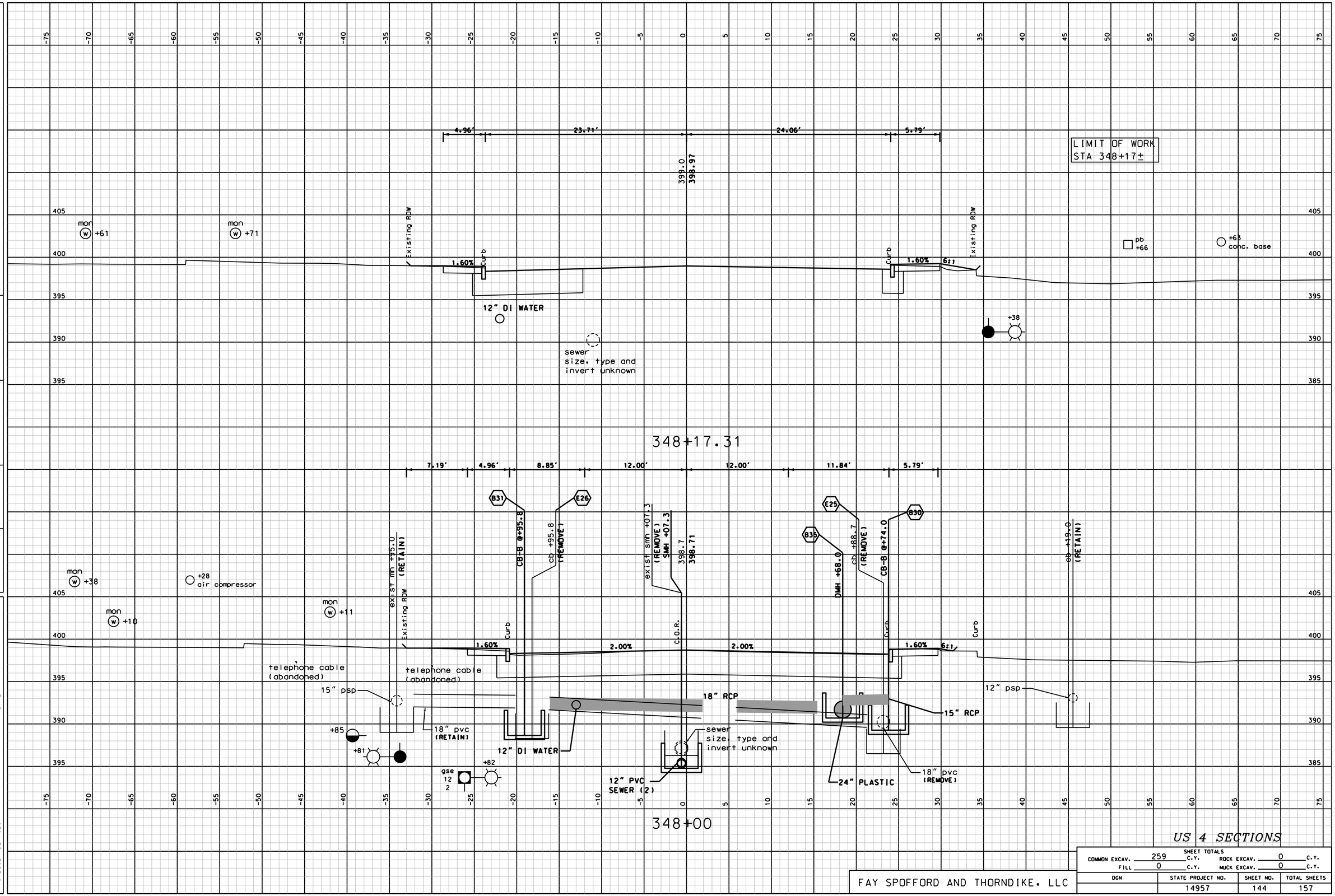

US 4 SECTIONS

SHEET TOTALS			
COMMON EXCAV. 259 C.Y.		ROCK EXCAV. 0 C.Y.	
FILL 0 C.Y.		MUCK EXCAV. 0 C.Y.	
DGN	STATE PROJECT NO.	SHEET NO.	TOTAL SHEETS
	14957	144	157

FAY SPOFFORD AND THORNDIKE, LLC

REVISIONS AFTER PROPOSAL

NUMBER	DATE	STATION	STATION	DESCRIPTION

SDR PROCESSED	ARM	DATE	08/11
NEW DESIGN	DEM	DATE	05/13
SHEET CHECKED	TAT	DATE	05/13
AS BUILT DETAILS		DATE	

REVISIONS AFTER PROPOSAL

NUMBER	DATE	STATION	STATION	DESCRIPTION

SDR PROCESSED	ARM	DATE 08/11
NEW DESIGN	DEM	DATE 05/13
SHEET CHECKED	TAT	DATE 05/13
AS BUILT DETAILS		DATE

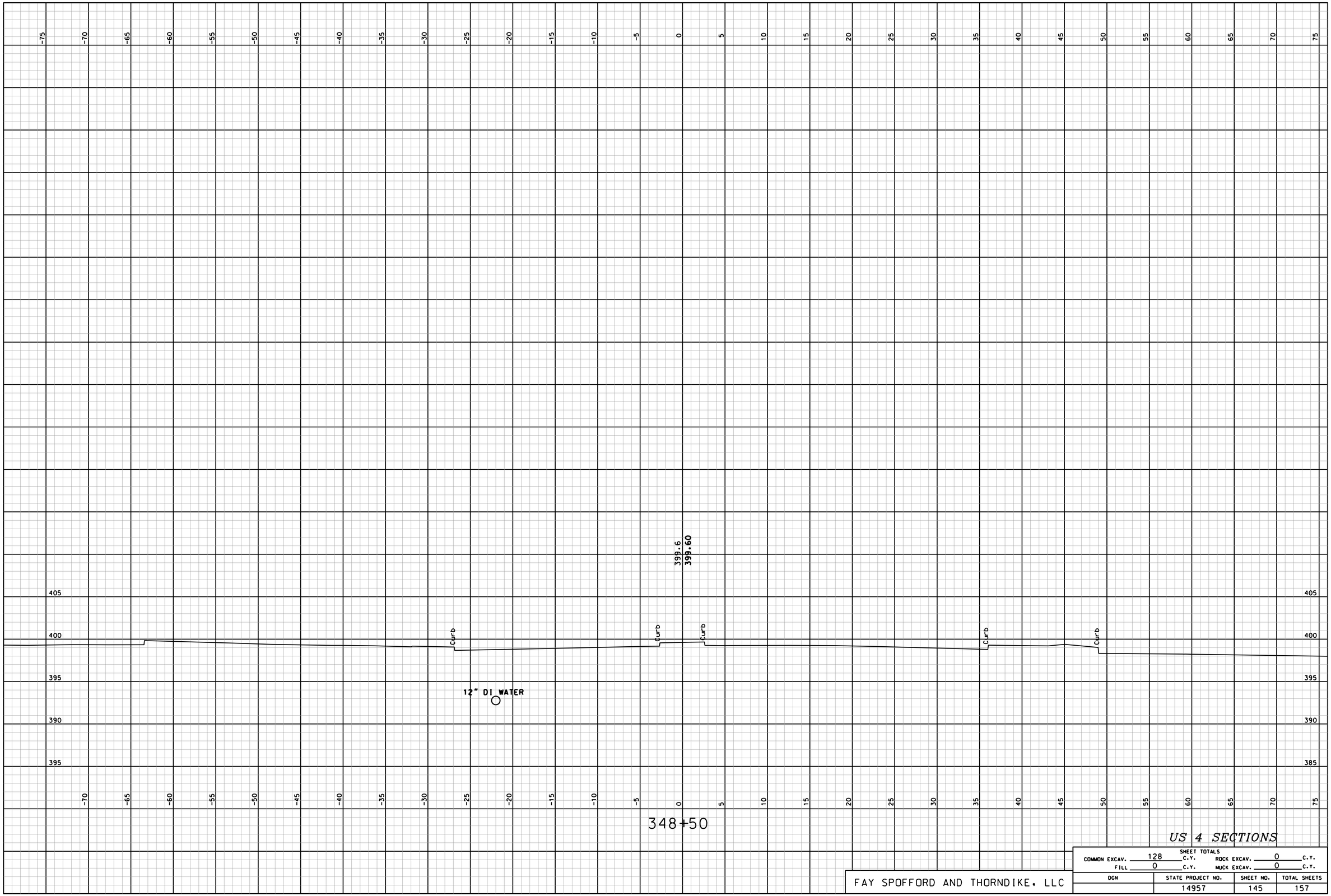

US 4 SECTIONS

SHEET TOTALS

COMMON EXCAV.	128 C.Y.	ROCK EXCAV.	0 C.Y.
FILL	0 C.Y.	MUCK EXCAV.	0 C.Y.

FAY SPOFFORD AND THORNDIKE, LLC

DGN	STATE PROJECT NO.	SHEET NO.	TOTAL SHEETS
	14957	145	157

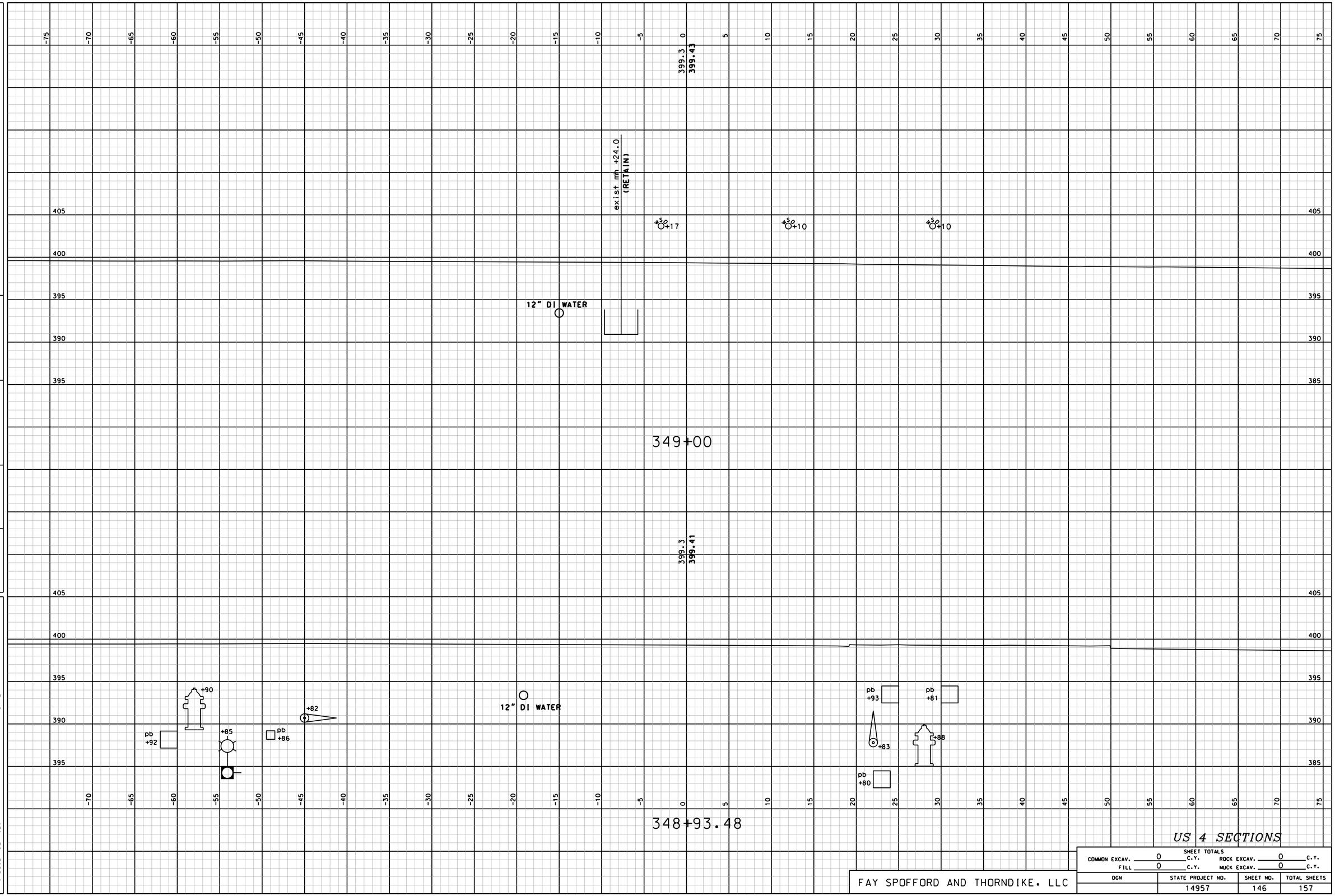

US 4 SECTIONS

SHEET TOTALS			
COMMON EXCAV. 0 C.Y.		ROCK EXCAV. 0 C.Y.	
FILL 0 C.Y.		MUCK EXCAV. 0 C.Y.	
DGN	STATE PROJECT NO.	SHEET NO.	TOTAL SHEETS
	14957	146	157

FAY SPOFFORD AND THORNDIKE, LLC

REVISIONS AFTER PROPOSAL

NUMBER	DATE	STATION	DESCRIPTION
		STATION	

SDR PROCESSED	ARM	DATE	08/11
NEW DESIGN	DEM	DATE	05/13
SHEET CHECKED	TAT	DATE	05/13
AS BUILT DETAILS		DATE	

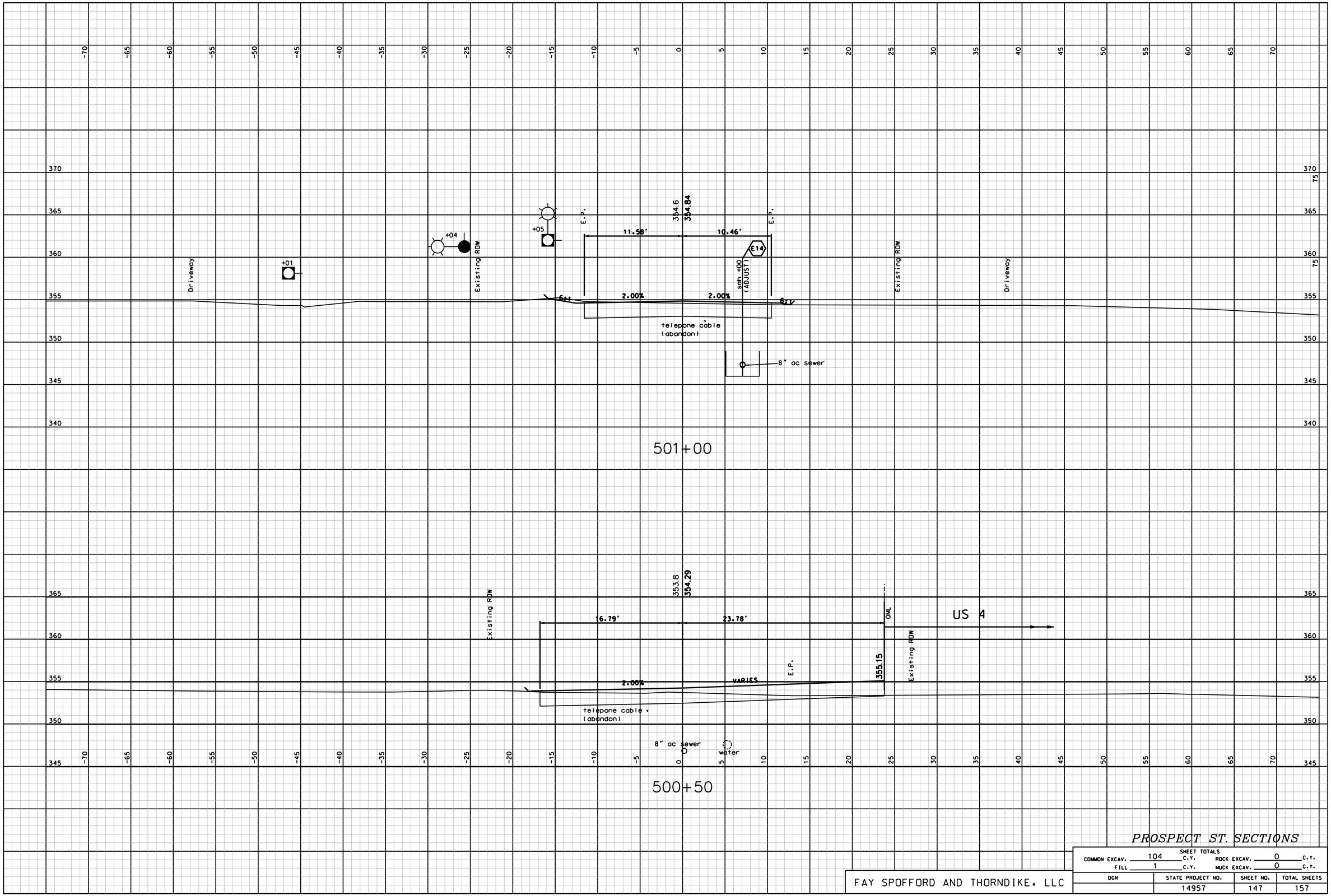

REVISIONS AFTER PROPOSAL

NUMBER	DATE	STATION	DESCRIPTION
		STATION	

		DATE
SDR PROCESSED	ARM	08/11
NEW DESIGN	DEM	05/13
SHEET CHECKED	TAT	05/13

AS BUILT DETAILS DATE

PROSPECT ST. SECTIONS

SHEET TOTALS

COMMON EXCAV. 104 C.Y. ROCK EXCAV. 0 C.Y.

FILL 1 C.Y. MUCK EXCAV. 0 C.Y.

DGN	STATE PROJECT NO.	SHEET NO.	TOTAL SHEETS
	14957	147	157

FAY SPOFFORD AND THORNDIKE, LLC

REVISIONS AFTER PROPOSAL

NUMBER	DATE	STATION	STATION	DESCRIPTION

SDR PROCESSED	ARM	DATE 08/11
NEW DESIGN	DEM	DATE 05/13
SHEET CHECKED	TAT	DATE 05/13
AS BUILT DETAILS		DATE

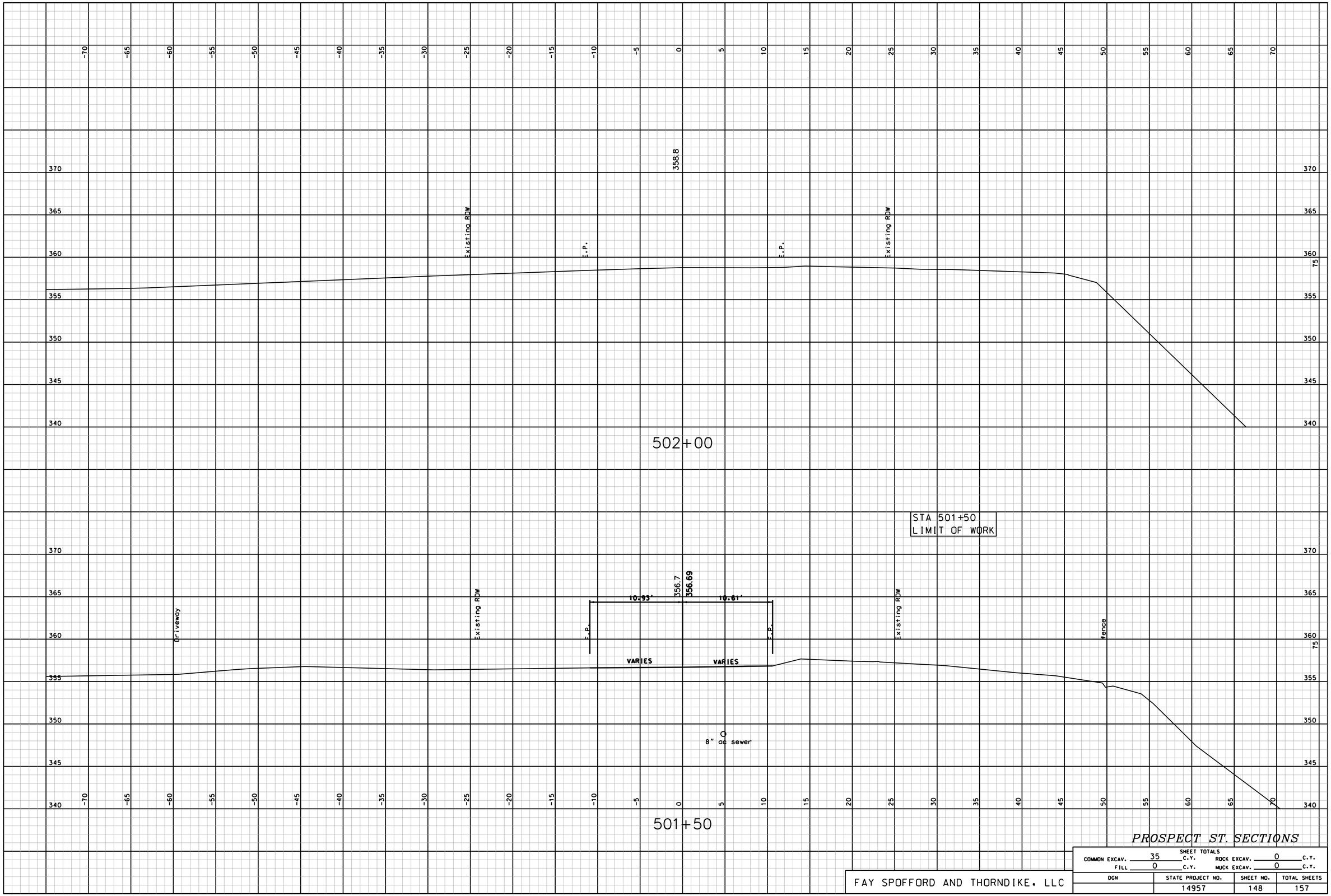

PROSPECT ST. SECTIONS

SHEET TOTALS			
COMMON EXCAV.	35 C.Y.	ROCK EXCAV.	0 C.Y.
FILL	0 C.Y.	MUCK EXCAV.	0 C.Y.

DGN	STATE PROJECT NO.	SHEET NO.	TOTAL SHEETS
	14957	148	157

FAY SPOFFORD AND THORNDIKE, LLC

REVISIONS AFTER PROPOSAL

NUMBER	DATE	STATION	STATION	DESCRIPTION

SDR PROCESSED	ARM	DATE	08/11
NEW DESIGN	DEM	DATE	05/13
SHEET CHECKED	TAT	DATE	05/13
AS BUILT DETAILS		DATE	

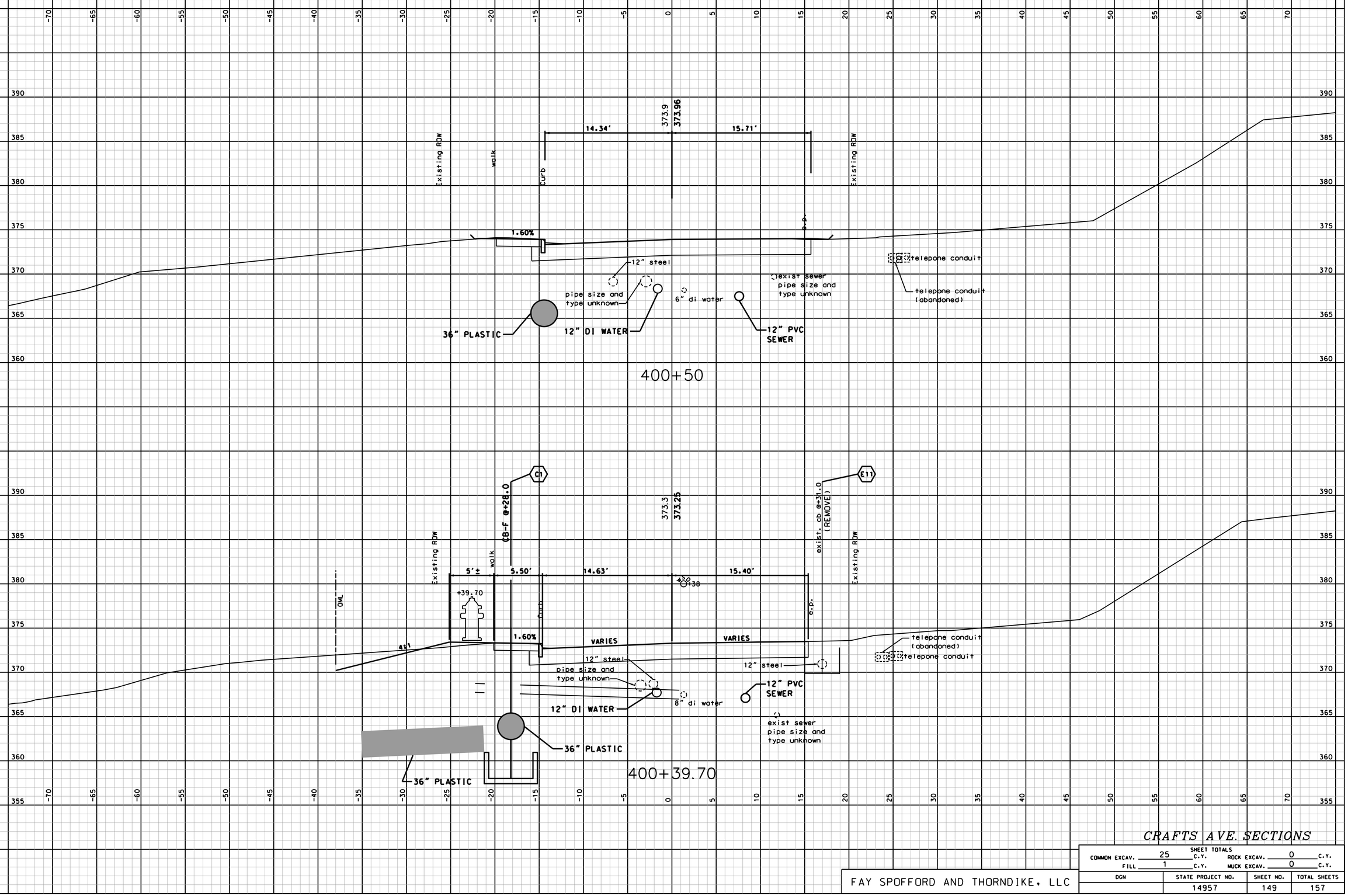

CRAFTS AVE. SECTIONS

SHEET TOTALS			
COMMON EXCAV.	25 C.Y.	ROCK EXCAV.	0 C.Y.
FILL	1 C.Y.	MUCK EXCAV.	0 C.Y.

FAY SPOFFORD AND THORNDIKE, LLC

DGN	STATE PROJECT NO.	SHEET NO.	TOTAL SHEETS
	14957	149	157

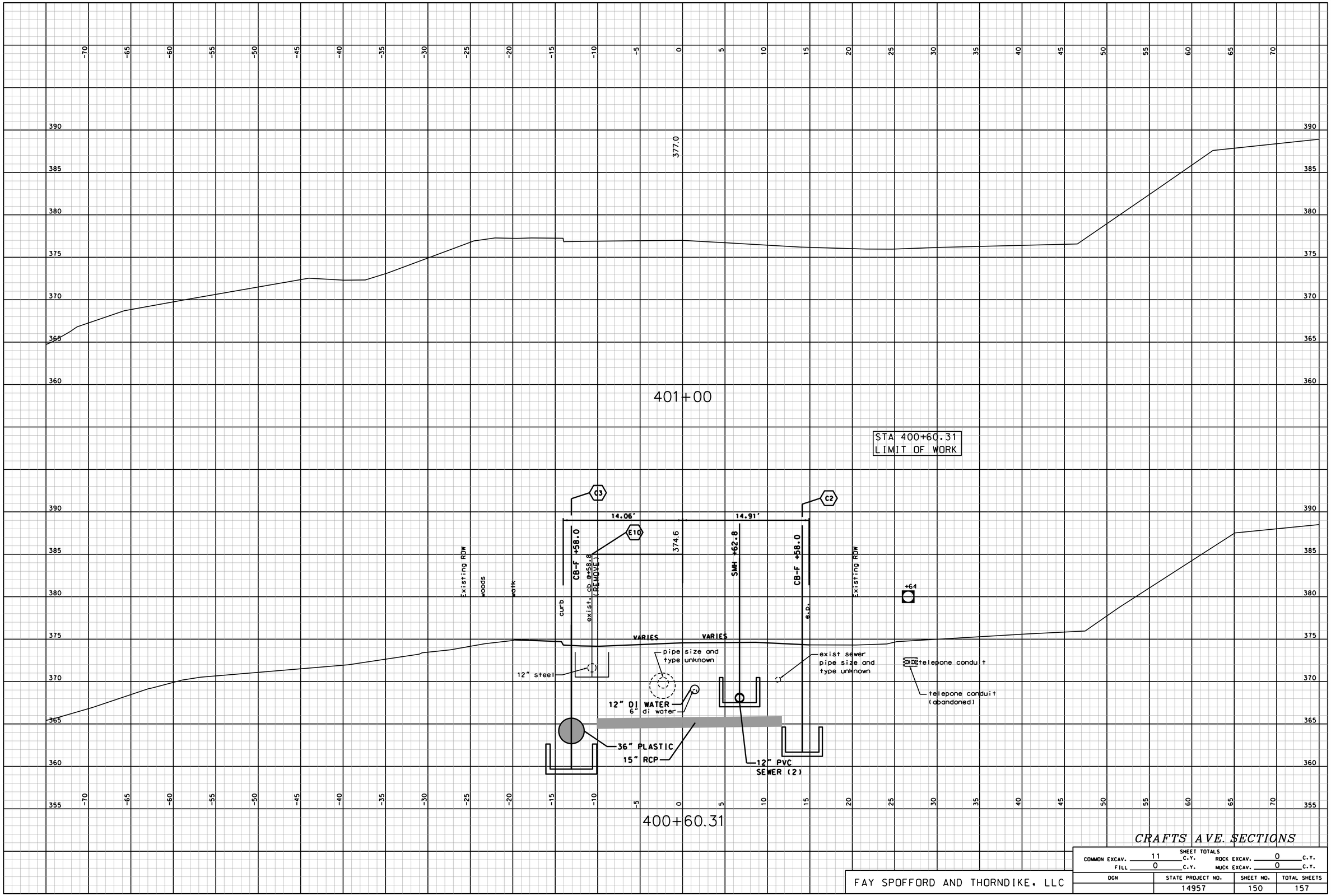

CRAFTS AVE. SECTIONS

SHEET TOTALS			
COMMON EXCAV. 11 C.Y.		ROCK EXCAV. 0 C.Y.	
FILL 0 C.Y.		MUCK EXCAV. 0 C.Y.	
DGN	STATE PROJECT NO.	SHEET NO.	TOTAL SHEETS
	14957	150	157

FAY SPOFFORD AND THORNDIKE, LLC

REVISIONS AFTER PROPOSAL

NUMBER	DATE	STATION	STATION	DESCRIPTION

SDR PROCESSED	ARM	DATE 08/11
NEW DESIGN	DEM	DATE 05/13
SHEET CHECKED	TAT	DATE 05/13

AS BUILT DETAILS DATE

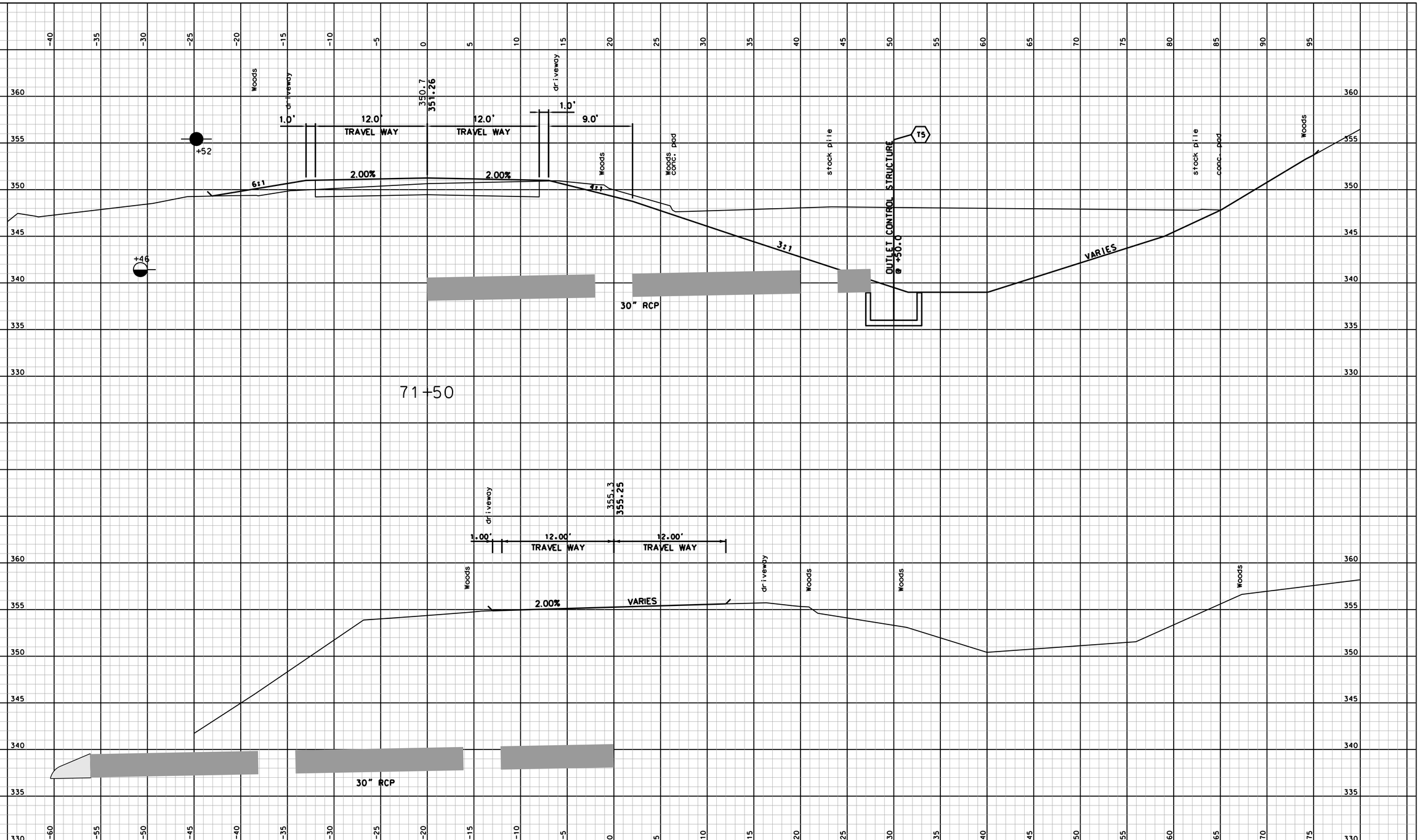

TRANSFER STATION DRIVEWAY SECTIONS

SHEET TOTALS			
COMMON EXCAV.	29 C.Y.	ROCK EXCAV.	0 C.Y.
FILL	6 C.Y.	MUCK EXCAV.	0 C.Y.

DGN	STATE PROJECT NO.	SHEET NO.	TOTAL SHEETS
	14957	151	157

FAY SPOFFORD AND THORNDIKE, LLC

NUMBER	DATE	STATION	STATION	DESCRIPTION

REVISIONS AFTER PROPOSAL

SDR PROCESSED	ARM	DATE 08/11
NEW DESIGN	DEM	DATE 05/13
SHEET CHECKED	TAT	DATE 05/13
AS BUILT DETAILS		DATE

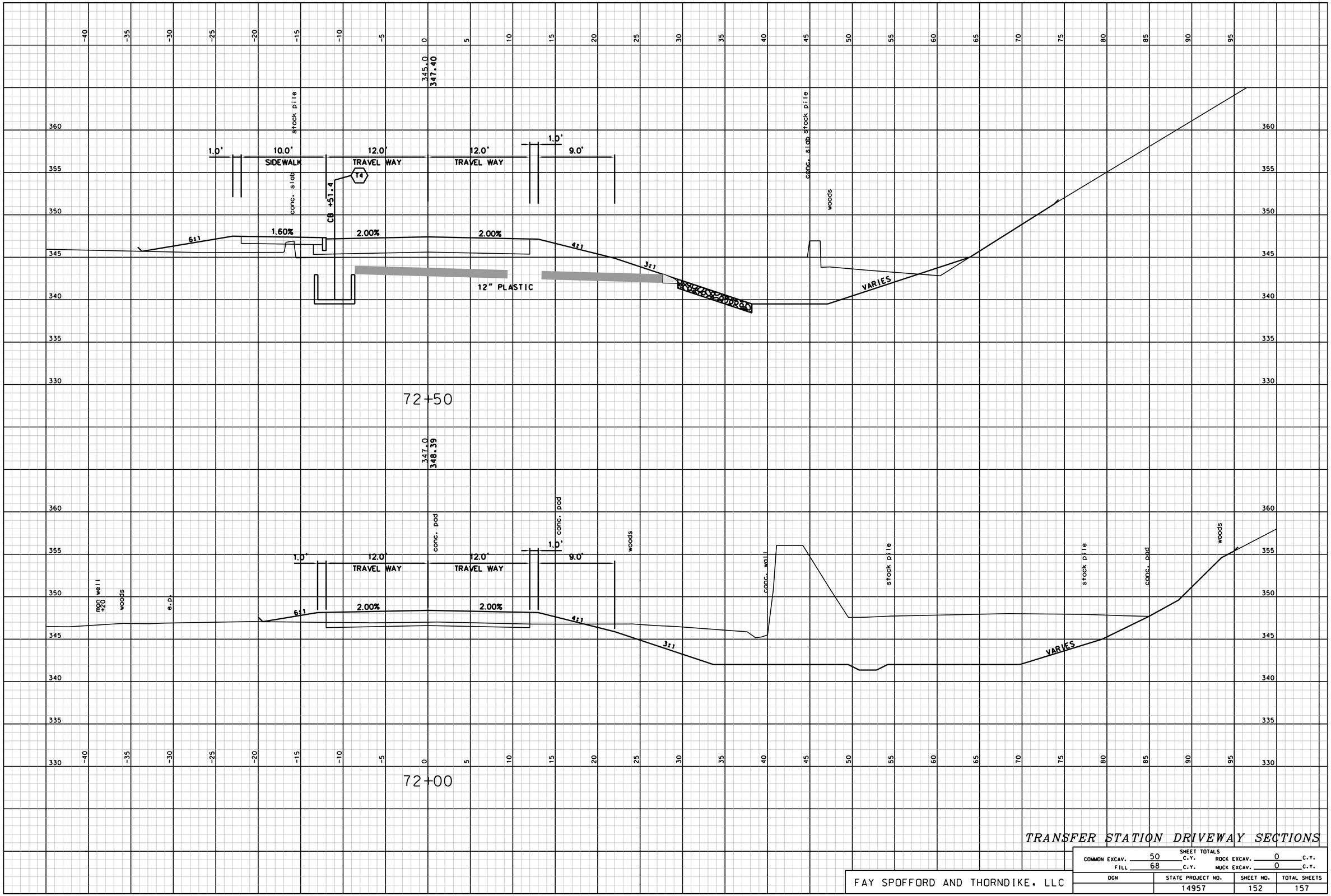

TRANSFER STATION DRIVEWAY SECTIONS

SHEET TOTALS			
COMMON EXCAV.	50 C.Y.	ROCK EXCAV.	0 C.Y.
FILL	68 C.Y.	MUCK EXCAV.	0 C.Y.

DGN	STATE PROJECT NO.	SHEET NO.	TOTAL SHEETS
	14957	152	157

FAY SPOFFORD AND THORNDIKE, LLC

NUMBER	DATE	STATION	STATION	DESCRIPTION

REVISIONS AFTER PROPOSAL

SDR PROCESSED	ARM	DATE 08/11
NEW DESIGN	DEM	DATE 05/13
SHEET CHECKED	TAT	DATE 05/13

AS BUILT DETAILS DATE

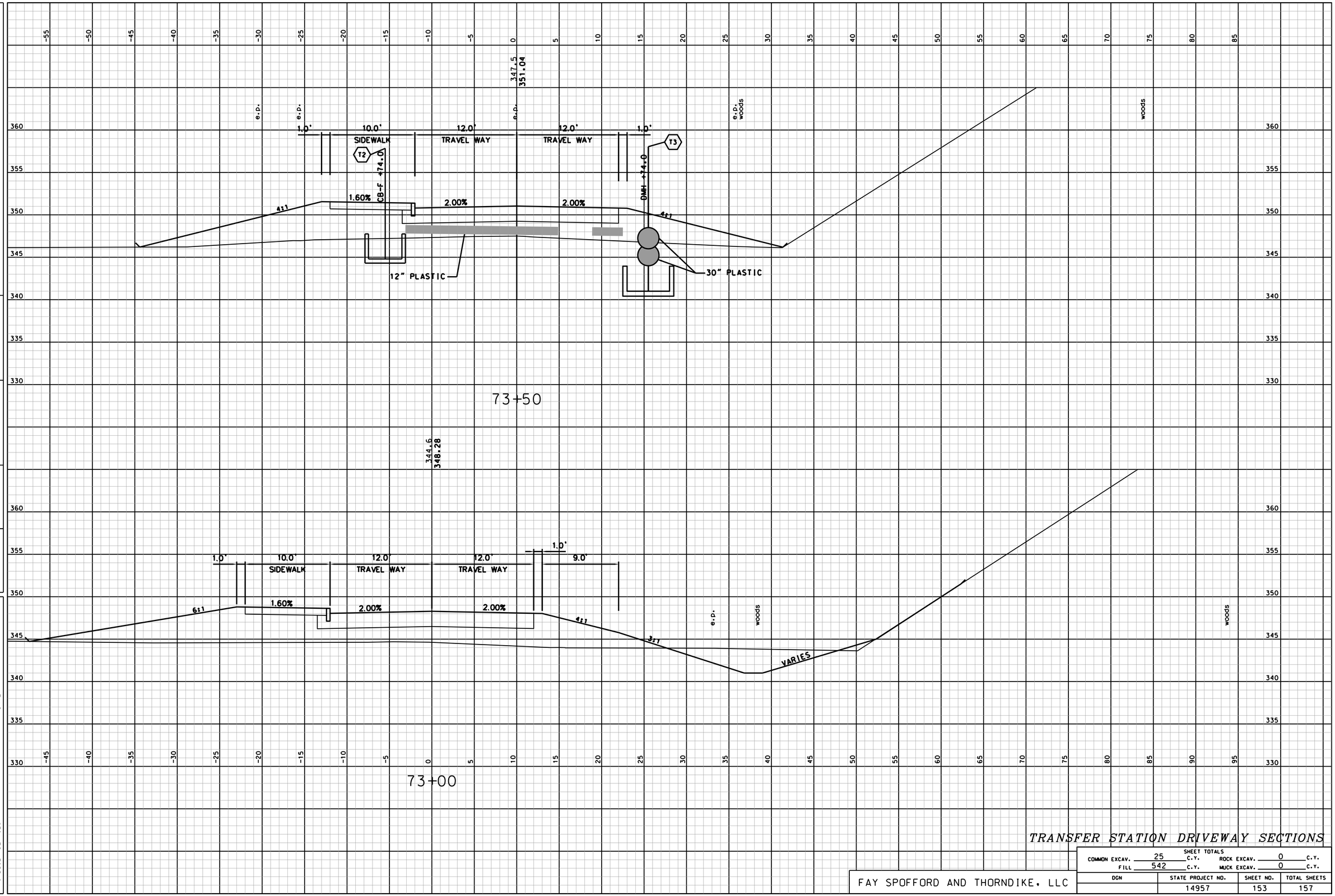

TRANSFER STATION DRIVEWAY SECTIONS

SHEET TOTALS			
COMMON EXCAV. 25 C.Y.		ROCK EXCAV. 0 C.Y.	
FILL 542 C.Y.		MUCK EXCAV. 0 C.Y.	
DGN	STATE PROJECT NO.	SHEET NO.	TOTAL SHEETS
	14957	153	157

FAY SPOFFORD AND THORNDIKE, LLC

NUMBER	DATE	STATION	STATION	DESCRIPTION

REVISIONS AFTER PROPOSAL

SDR PROCESSED	ARM	DATE 08/11
NEW DESIGN	DEM	DATE 05/13
SHEET CHECKED	TAT	DATE 05/13

AS BUILT DETAILS DATE

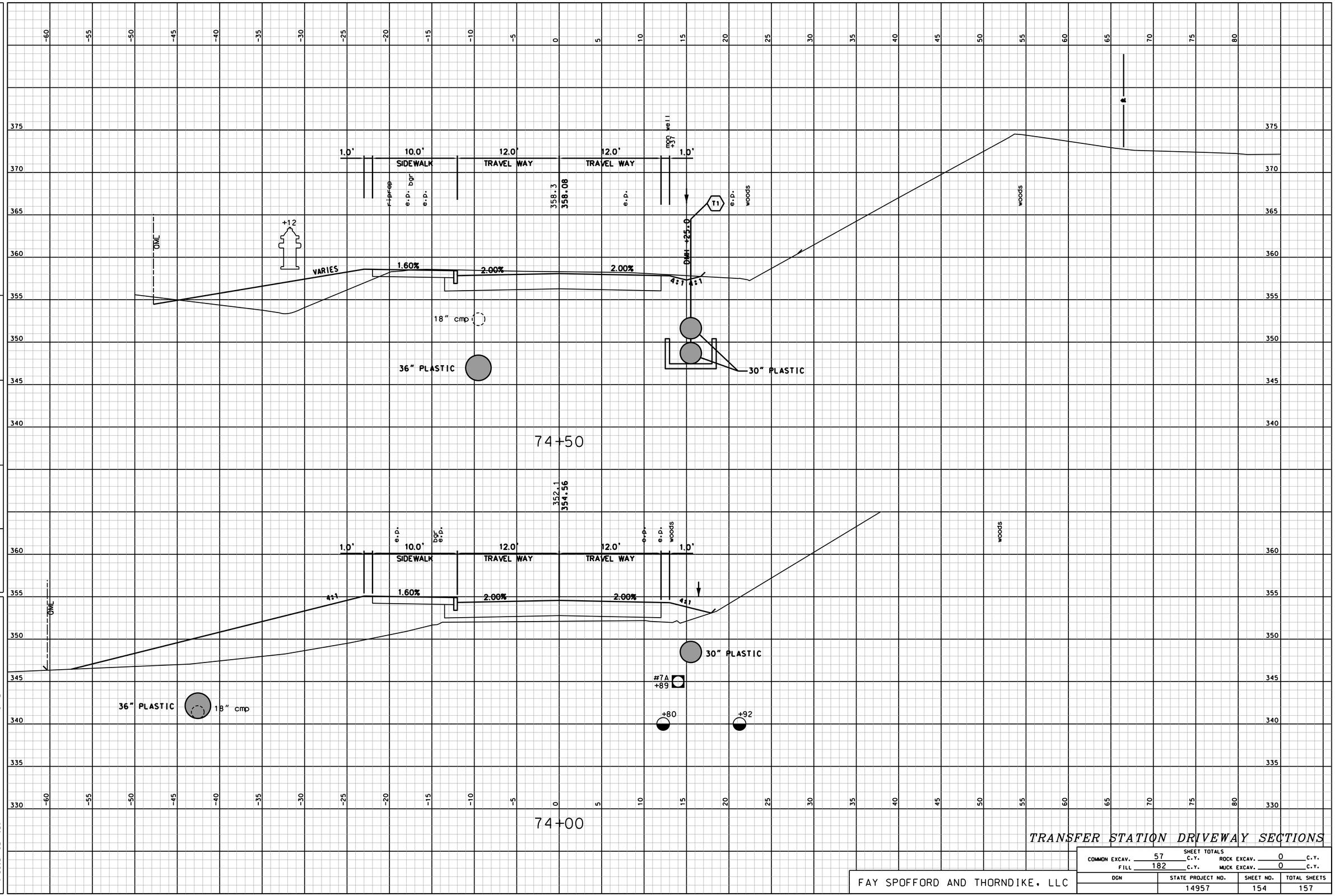

TRANSFER STATION DRIVEWAY SECTIONS

SHEET TOTALS			
COMMON EXCAV.	57 C.Y.	ROCK EXCAV.	0 C.Y.
FILL	182 C.Y.	MUCK EXCAV.	0 C.Y.

DGN	STATE PROJECT NO.	SHEET NO.	TOTAL SHEETS
	14957	154	157

FAY SPOFFORD AND THORNDIKE, LLC

REVISIONS AFTER PROPOSAL			
NUMBER	DATE	STATION	DESCRIPTION
		STATION	

		DATE
SDR PROCESSED	ARM	08/11
NEW DESIGN	DEM	05/13
SHEET CHECKED	TAT	05/13
AS BUILT DETAILS		DATE

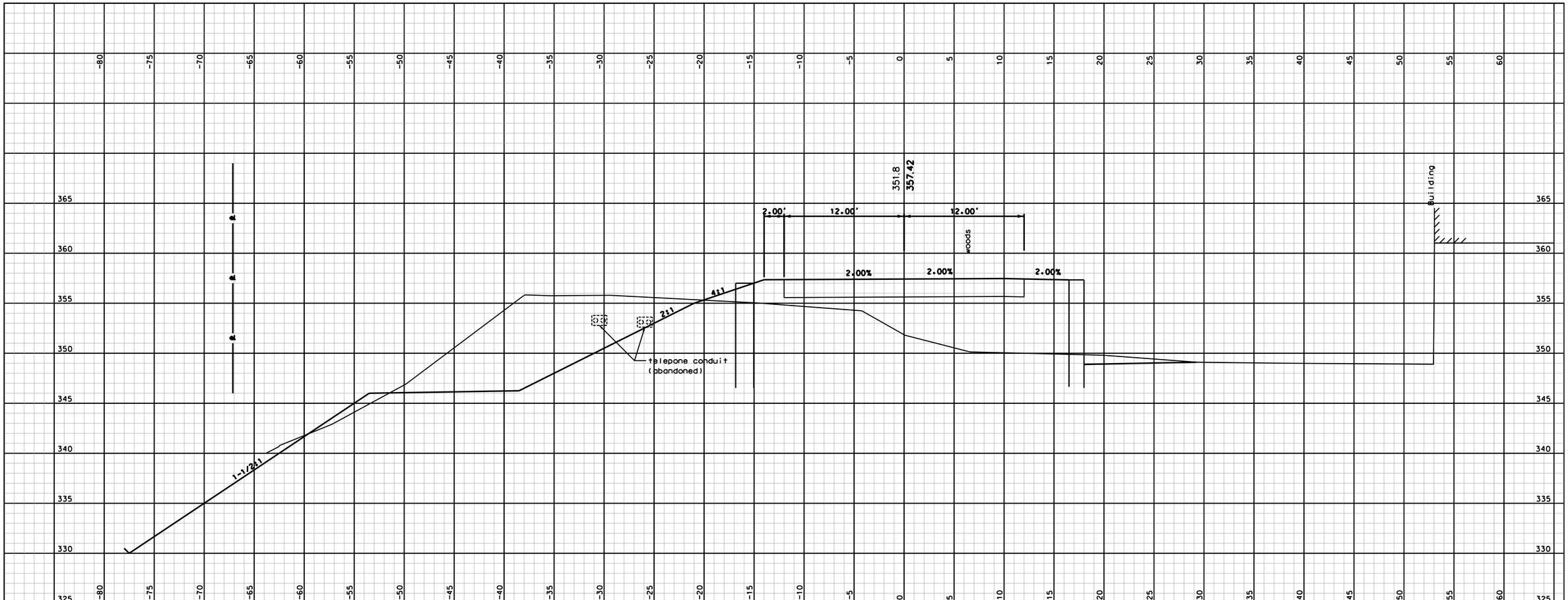

REVISIONS AFTER PROPOSAL

NUMBER	DATE	STATION	STATION	DESCRIPTION

SDR PROCESSED	ARM	DATE 08/11
NEW DESIGN	DEM	DATE 05/13
SHEET CHECKED	TAT	DATE 05/13
AS BUILT DETAILS		DATE

STATELINE DRIVEWAY SECTIONS

SHEET TOTALS

COMMON EXCAV. 3 C.Y. ROCK EXCAV. 0 C.Y.

FILL 26 C.Y. MUCK EXCAV. 0 C.Y.

FAY SPOFFORD AND THORNDIKE, LLC

DGN	STATE PROJECT NO.	SHEET NO.	TOTAL SHEETS
	14957	155	157

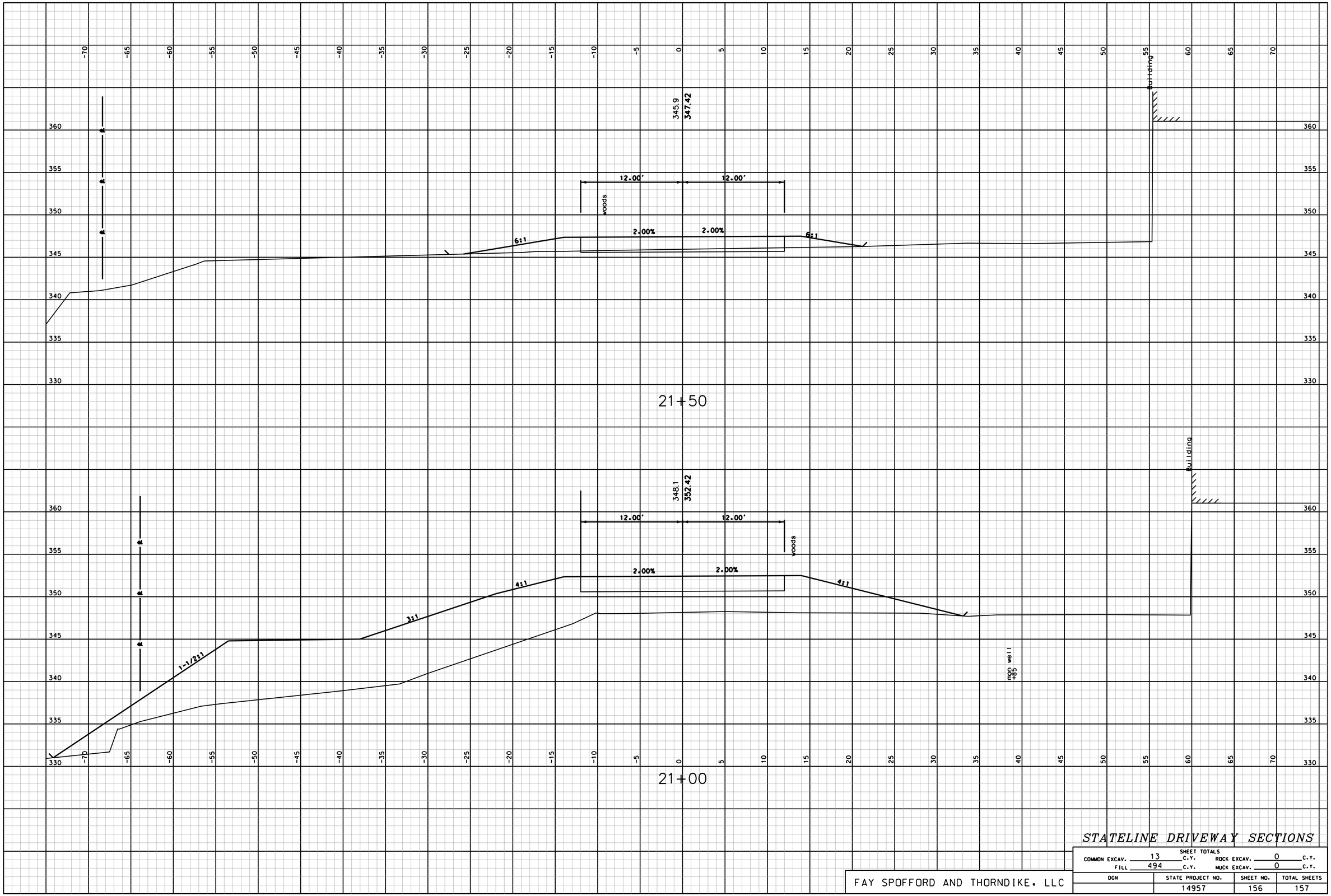

STATELINE DRIVEWAY SECTIONS

SHEET TOTALS			
COMMON EXCAV.	13 C.Y.	ROCK EXCAV.	0 C.Y.
FILL	494 C.Y.	MUCK EXCAV.	0 C.Y.

FAY SPOFFORD AND THORNDIKE, LLC

DGN	STATE PROJECT NO.	SHEET NO.	TOTAL SHEETS
	14957	156	157

REVISIONS AFTER PROPOSAL

NUMBER	DATE	STATION	STATION	DESCRIPTION

SDR PROCESSED	ARM	DATE 08/11
NEW DESIGN	DEM	DATE 05/13
SHEET CHECKED	TAT	DATE 05/13

AS BUILT DETAILS DATE

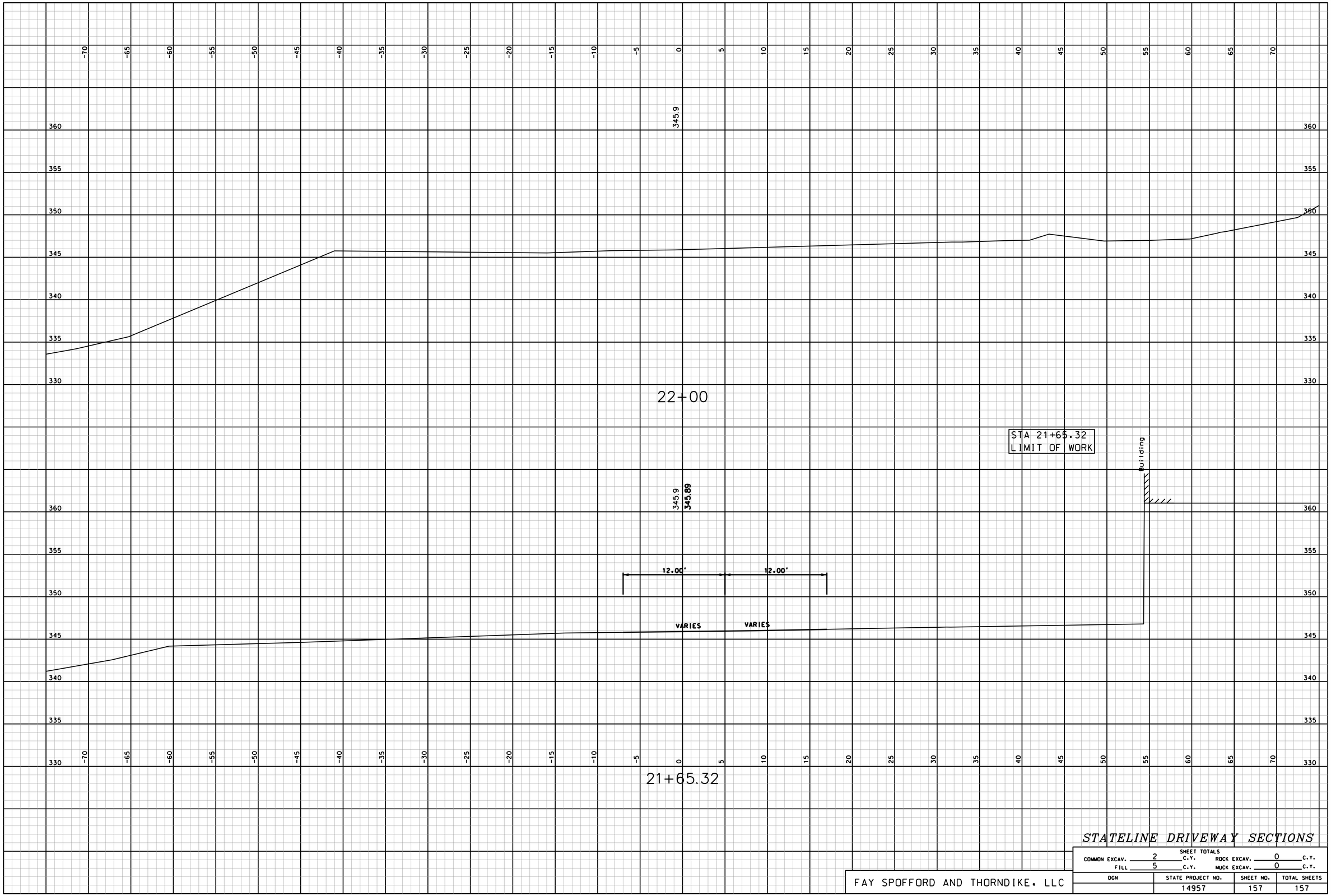

REVISIONS AFTER PROPOSAL

NUMBER	DATE	STATION	STATION	DESCRIPTION

SDR PROCESSED	ARM	DATE 08/11
NEW DESIGN	DEM	DATE 05/13
SHEET CHECKED	TAT	DATE 05/13
AS BUILT DETAILS		DATE

STATELINE DRIVEWAY SECTIONS

SHEET TOTALS

COMMON EXCAV. 2 C.Y. ROCK EXCAV. 0 C.Y.

FILL 5 C.Y. MUCK EXCAV. 0 C.Y.

DGN	STATE PROJECT NO.	SHEET NO.	TOTAL SHEETS
	14957	157	157

FAY SPOFFORD AND THORNDIKE, LLC