SEE SHEET 2 FOR INDEX OF SHEETS

STATE OF VERMONT
AGENCY OF TRANSPORTATION

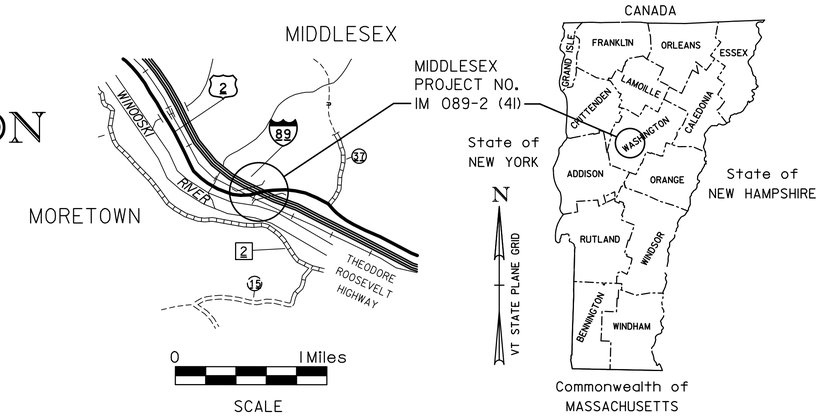

PROPOSED IMPROVEMENT
BRIDGE PROJECT
TOWN OF MIDDLESEX
COUNTY OF WASHINGTON
U.S. ROUTE 2 - MAJOR COLLECTOR
BRIDGE NO. 55

PROJECT LOCATION

BEGINNING AT A POINT ON U.S. ROUTE 2, 1.905 MILES EAST OF U.S. ROUTE 2 AND VT 100B INTERSECTION AND EXTENDING EASTERLY 0.256 MILES ALONG U.S. ROUTE 2 OVER INTERSTATE 89 (M.M. 56.2) AND NECR.

STRUCTURE LENGTH:	512.5	FEET
ROADWAY LENGTH:	837.5	FEET
PROJECT LENGTH:	1350.0	FEET

PROJECT DESCRIPTION

REPLACEMENT OF BRIDGE #55 WITH A NEW BRIDGE ON NEW ALIGNMENT INCLUDING RELATED APPROACH WORK AND REMOVAL OF EXISTING BRIDGE.

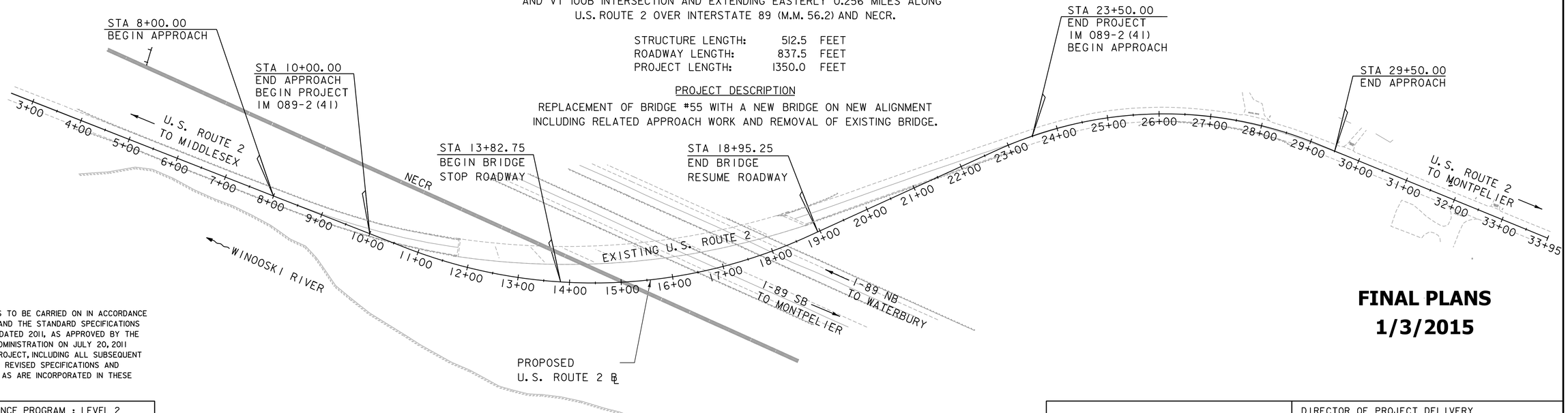

SCALE 1" = 100'-0

200 0 200

FINAL PLANS
1/3/2015

CONSTRUCTION IS TO BE CARRIED ON IN ACCORDANCE WITH THESE PLANS AND THE STANDARD SPECIFICATIONS FOR CONSTRUCTION DATED 2011, AS APPROVED BY THE FEDERAL HIGHWAY ADMINISTRATION ON JULY 20, 2011 FOR USE ON THIS PROJECT, INCLUDING ALL SUBSEQUENT REVISIONS AND SUCH REVISED SPECIFICATIONS AND SPECIAL PROVISIONS AS ARE INCORPORATED IN THESE PLANS.

QUALITY ASSURANCE PROGRAM : LEVEL 2

SURVEYED BY : VERMONT AGENCY OF TRANSPORTATION
SURVEYED DATE : -

DATUM
VERTICAL NAVD 88
HORIZONTAL NAD 83 (96)

T·Y·LIN INTERNATIONAL

DIRECTOR OF PROJECT DELIVERY
APPROVED _____ DATE _____

PROJECT MANAGER : DOUGLAS E. BONNEAU

PROJECT NAME : MIDDLESEX
PROJECT NUMBER : IM 089-2 (41)

SHEET 1 OF 154 SHEETS

STATE OF VERMONT
AGENCY OF TRANSPORTATION

PRELIMINARY INFORMATION SHEET (BRIDGE)

Version
LRFD

INDEX OF SHEETS

PLAN SHEETS

1	TITLE SHEET
2	PRELIMINARY INFORMATION SHEET
3	ROADWAY TYPICAL SECTIONS
4	BRIDGE TYPICAL SECTION
5	EARTHWORK TYPICAL SECTIONS
6	PROJECT NOTES
7 - 9	QUANTITY SHEETS
10	EARTHWORK / ITEM DRAINAGE AND DETAIL SUMMARY
11	CONVENTIONAL SYMBOLOGY LEGEND
12	TIE SHEET
13	ALIGNMENT SHEET
14 - 18	LAYOUT SHEETS
19 - 23	PROFILE SHEETS
24	BANKING DIAGRAM
25	TRAFFIC CONTROL NOTES
26 - 28	PHASED CONSTRUCTION TYPICAL SECTIONS
29 - 43	PHASED CONSTRUCTION LAYOUT SHEETS
44	TRAFFIC SIGN SUMMARY SHEET
45	PIPE PROFILE SHEET 1
46	BORING INFORMATION & LAYOUT SHEET
47	INTERPRETIVE SOIL PROFILE
48	INTERPRETIVE SOIL SECTIONS
49 - 67	BORING LOGS
68	BRIDGE PLAN & ELEVATION
69	GEOMETRIC LAYOUT PLAN
70 - 71	SUPERSTRUCTURE PLAN AND DETAILS
72 - 73	FRAMING PLAN & GIRDER DETAILS
74	GIRDER ELEVATIONS
75	FIELD SPLICE DETAILS
76	CROSS FRAME DETAILS
77	CAMBER DIAGRAM AND DEAD LOAD DEFLECTIONS
78	BEARING DETAILS
79	ABUTMENT #1 - PLAN, ELEVATION, & SECTION
80	ABUTMENT #1 - REINFORCEMENT
81	ABUTMENT #2 - PILE CAP PLAN
82	ABUTMENT #2 PILE CAP REINFORCEMENT
83	ABUTMENT #2 - PLAN & ELEVATION
84	ABUTMENT #2 REINFORCEMENT
85	ABUTMENT #2 SECTIONS
86	ABUTMENT #2 WINGWALL DETAILS
87	PIER #1 FOOTING PLAN & REINFORCEMENT
88	PIER #1 PLAN, ELEVATION, & SECTIONS
89	PIER #1 REINFORCEMENT & DETAILS
90	PIER #2 PILE CAP REINFORCEMENT
91	PIER #2 PLAN, ELEVATION, & SECTIONS
92	PIER 2 REINFORCEMENT & DETAILS
93	MSE WALL SECTION & NOTES
94	MSE WALL #1 PLAN & ELEVATION
95	MSE WALL #2 PLAN & ELEVATION
96	MSE WALL #3 PLAN & ELEVATION
97	APPROACH SLAB DETAILS
98	DOWNSPOUT DETAILS
99	SNOW FENCE DETAILS
100 - 101	REINFORCEMENT SCHEDULES
102 - 132	ROADWAY CROSS SECTIONS
133	RAILROAD CLEARANCE SECTIONS
134 - 135	EPSC NARRATIVES
136 - 140	EPSC EXISTING CONDITIONS SITE PLANS
141 - 145	EPSC CONSTRUCTION SITE PLANS
146 - 150	EPSC FINAL CONDITIONS SITE PLANS
151 - 154	EPSC DETAILS SHEETS

STANDARDS LIST

B-5	SLOPE GRADING, EMBANKMENTS, MUCK	06-01-1994
B-71	STANDARD FOR RESIDENTIAL AND COMMERCIAL DRIVES	07-08-2005
C-10	CURBING	02-11-2008
D-3	TREATED GUTTERS	06-01-1994
D-6	REINFORCED CONCRETE DROP INLET W/GRATE (DITCHES)	06-01-1994
D-11	STEEL OR IRON GRATES& COVERS (TYPE A)	06-01-1994
D-30	UNDERDRAIN CONSTRUCTION DETAILS	08-13-2007
D-33	REINFORCED CONCRETE STRAIGHT HEADWALL	03-12-2007
E-121	STANDARD SIGN PLACEMENT - CONVENTIONAL ROAD	08-08-1995
E-136A	U.S. ROUTE MARKER SIGN DETAILS	08-08-1995
E-142	REGULATORY SIGN DETAILS	09-20-1995
E-160	FLANGED CHANNEL STEEL SIGN POST	05-20-1999
E-163	TUBULAR STEEL SIGN POST	05-20-1999
E-193	PAVEMENT MARKING DETAILS	08-18-1995
F-1	WOVEN WIRE FENCE DETAILS	06-01-1994
G-1	STEEL BEAM GUARDRAIL DETAILS (POST, DELINEATOR, TYPICALS)	01-03-2000
G-1D	STEEL BEAM GUARDRAIL DETAILS (END TERMINAL, ANCHOR, MEDIAN)	01-03-2000
G-19	GENERIC GRADING PLANS FOR GUARDRAIL END TERMINALS	11-15-2002
S-360A	BRIDGE RAILING, GALVANIZED 2 RAIL BOX BEAM	04-23-2012
S-360B	GUARDRAIL APPROACH SECTION, GALVANIZED 2 RAIL BOX BEAM	04-23-2012
S-363	THRIE BEAM TO STANDARD STEEL BEAM TRANSITION SECTION	04-23-2012
T-1	TRAFFIC CONTROL GENERAL NOTES	08-06-2012
T-10	CONVENTIONAL ROADS CONSTRUCTION APPROACH SIGNING	08-06-2012
T-11	CONSTRUCTION APPROACH SIGNING DIVIDED HIGHWAY ONE LANE CLOSED	08-06-2012
T-12	TRAFFIC CONTROL DIVIDED HIGHWAY ONE LANE CLOSED	08-06-2012
T-17	TRAFFIC CONTROL MISCELLANEOUS DETAILS	08-06-2012
T-22	TRAFFIC CONTROL FOR PAVEMENT MARKING ON DIVIDED HIGHWAY	08-06-2012
T-24	TRAFFIC CONTROL FOR MAINTENANCE PAVEMENT MARKING OPERATION	08-06-2012
T-28	CONSTRUCTION SIGN DETAILS	08-06-2012
T-29	CONSTRUCTION SIGN DETAILS	08-06-2012
T-30	CONSTRUCTION SIGN DETAILS	08-06-2012
T-31	CONSTRUCTION SIGN DETAILS	08-06-2012
T-35	CONSTRUCTION ZONE LONGITUDNAL DROP-OFFS	08-06-2012
T-36	CONSTRUCTION ZONE LONGITUDNAL DROP-OFFS FOR PAVING	08-06-2012
T-40	DELINEATORS AND MILEPOSTS	01-02-2013
T-42	BRIDGE NUMBER PLAQUE	04-09-2014
T-44	MILEMARKER DETAILS STATE AND TOWN HIGHWAYS	04-09-2014
T-45	SQUARE TUBE SIGN POST AND ANCHOR	01-02-2013

STRUCTURES DETAIL SHEETS

SD-501.00	CONCRETE DETAILS AND NOTES	02-09-2012
SD-502.00	CONCRETE DETAILS AND NOTES	10-10-2012
SD-516.10	BRIDGE JOINT ASHPALTIC PLUG	08-29-2011
SD-516.11a	BRIDGE EXPANSION JOINT, VERMONT	02-24-2011
SD-516.11b	BRIDGE EXPANSION JOINT, VERMONT	02-24-2011
SD-601.00	STRUCTURAL STEEL DETAILS AND NOTES	06-04-2010
SD-602.00	STRUCTURAL STEEL PLATE GIRDER DETAILS AND NOTES	05-02-2011

REFERENCE SHEETS - EXISTING BRIDGE

EXISTING BRIDGE PLANS (21 OF 21)

AS BUILT "REBAR" DETAIL

LEVEL I	LEVEL II	LEVEL III
TYPE:	TYPE:	TYPE:
GRADE:	GRADE:	GRADE:

TRAFFIC DATA

YEAR	ADT	DHV	% D	% T	ADTT
2013	2500	280	52	3.3	120
2033	2700	300	52	4.7	180

20 year ESAL for flexible pavement from 2013 to 2033 : 726000
40 year ESAL for flexible pavement from 2013 to 2053 : 1615000
Design Speed : 50 mph

FINAL HYDRAULIC REPORT

HYDROLOGIC DATA

DATE: N/A

DRAINAGE AREA:
CHARACTER OF TERRAIN:
STREAM CHARACTERISTICS:
NATURE OF STREAMBED:

Q 2.33 = Q50 =
Q 10 = Q 100 =
Q 25 = Q 500 =

DATE OF FLOOD OF RECORD:
ESTIMATED DISCHARGE:
WATER SURFACE ELEVATION:
NATURAL STREAM VELOCITY:
ICE CONDITIONS:
DEBRIS:
DOES THE STREAM REACH MAXIMUM HIGHWATER ELEV. RAPIDLY?
IS ORDINARY RISE RAPID?
IS STAGE AFFECTED BY UPSTREAM OR DOWNSTREAM CONDITIONS?
IF YES, DESCRIBE

WATERSHED STORAGE: HEADWATERS: -
UNIFORM: -
IMMEDIATELY ABOVE SITE: -

EXISTING STRUCTURE INFORMATION

STRUCTURE TYPE:
YEAR BUILT:
CLEAR SPAN (NORMAL TO STREAM):
VERTICAL CLEARANCE ABOVE STREAMBED:
WATERWAY OF FULL OPENING:
DISPOSITION OF STRUCTURE:
TYPE OF MATERIAL UNDER SUBSTRUCTURE:

WATER SURFACE ELEVATIONS AT: ONE BRIDGE LENGTH UPSTREAM

Q 2.33 = VELOCITY =
Q 10 = "
Q 25 = "
Q50 = "
Q 100 = "

LONG TERM STREAMBED CHANGES:

IS THE ROADWAY OVERTOPPED BELOW Q100?
FREQUENCY:
RELIEF ELEVATION:
DISCHARGE OVER ROAD @ Q100:

UPSTREAM STRUCTURE

TOWN: DISTANCE:
HIGHWAY #: STRUCTURE #:
CLEAR SPAN: CLEAR HEIGHT:
YEAR BUILT: FULL WATERWAY:
STRUCTURE TYPE:

DOWNSTREAM STRUCTURE

TOWN: DISTANCE:
HIGHWAY #: STRUCTURE #:
CLEAR SPAN: CLEAR HEIGHT:
YEAR BUILT: FULL WATERWAY:
STRUCTURE TYPE:

LRFR LOAD RATING FACTORS

LOADING LEVELS	TRUCK						
	H-20	HL-93	3S2	6 AXLE	3A. STR.	4A. STR.	5A. SEMI
TONNAGE	20	36	36	66	30	34.5	38
INVENTORY	3.26	1.13					
POSTING							
OPERATING	4.22	1.46	2.39	1.40	2.52	2.23	2.18
COMMENTS:							

PROPOSED STRUCTURE

STRUCTURE TYPE:

CLEAR SPAN (NORMAL TO STREAM):
VERTICAL CLEARANCE ABOVE STREAMBED:
WATERWAY OF FULL OPENING:

WATER SURFACE ELEVATIONS AT: ONE BRIDGE LENGTH UPSTREAM

Q 2.33 = VELOCITY =
Q 10 = "
Q 25 = "
Q50 = "
Q 100 = "

IS THE ROADWAY OVERTOPPED BELOW Q100?
FREQUENCY:
RELIEF ELEVATION:
DISCHARGE OVER ROAD @ Q100:

AVERAGE LOW ELEVATION OF SUPERSTRUCTURE:
VERTICAL CLEARANCE:

SCOUR:

REQUIRED CHANNEL PROTECTION:

PERMIT INFORMATION

AVERAGE DAILY FLOW: DEPTH OR ELEVATION:
ORDINARY LOW WATER:
ORDINARY HIGH WATER:

TEMPORARY BRIDGE REQUIREMENTS

STRUCTURE TYPE:
CLEAR SPAN (NORMAL TO STREAM):
VERTICAL CLEARANCE ABOVE STREAMBED:
WATERWAY AREA OF FULL OPENING:

ADDITIONAL INFORMATION

TRAFFIC MAINTENANCE NOTES

1. MAINTAIN TWO-WAY TRAFFIC ON THE EXISTING STRUCTURE.
2. TRAFFIC SIGNALS ARE NOT NECESSARY.
3. SIDEWALKS ARE NOT NECESSARY

DESIGN VALUES

1. DESIGN LIVE LOAD		HL-93
2. FUTURE PAVEMENT	d_p:	0.0 INCH
3. ABUTMENT BEARING TO BEARING LENGTH (THREE SPANS) (187.00 - 168.00 - 151.00) FT	L:	506.00 FT
4. MIN. MID-SPAN POS. CAMBER @ RELEASE (PRESTRESSED UNITS)	Δ:	- - -
5. PRESTRESSING STRAND	f_y:	- - -
6. PRESTRESSED CONCRETE STRENGTH	f'_c:	- - -
7. PRESTRESSED CONCRETE RELEASE STRENGTH	f'_{ci}:	- - -
8. CONCRETE, HIGH PERFORMANCE CLASS AA	f'_c:	- - -
9. CONCRETE, HIGH PERFORMANCE CLASS A	f'_c:	4.0 KSI
10. CONCRETE, HIGH PERFORMANCE CLASS B	f'_c:	3.5 KSI
11. CONCRETE, CLASS C	f'_c:	- - -
12. REINFORCING STEEL	f_y:	60 KSI
13. STRUCTURAL STEEL AASHTO M270 (WEATHERING)	f_y:	50 KSI
14. NOMINAL BEARING RESISTANCE OF SOIL	q_n:	13.5 KSF
15. SOIL BEARING RESISTANCE FACTOR (REFER TO AASHTO LRFD)	ϕ:	0.45
16. NOMINAL BEARING RESISTANCE OF ROCK	q_n:	60.0 KSF
17. ROCK BEARING RESISTANCE FACTOR (REFER TO AASHTO LRFD)	ϕ:	0.45
18. PILE RESISTANCE FACTOR	ϕ:	0.50
19. LATERAL PILE DEFLECTION	Δ:	1/8 INCH
20. BASIC WIND SPEED	V_{3s}:	100 MPH
21. MINIMUM GROUND SNOW LOAD	p_g:	- - -
22. SEISMIC DATA PGA: 9%g	S_s:	19%g
	S_1:	6%g

PROJECT NAME: **MIDDLESEX**
PROJECT NUMBER: **IM-089-2(41)**

FILE NAME: **z07a052pi.xls**
PROJECT LEADER: **R. HEBERT**
DESIGNED BY: **J. OLUND**
PRELIMINARY INFORMATION SHEET

PLOT DATE: 1/3/2015
DRAWN BY: **S. MORGAN**
CHECKED BY: **D. BURHANS**
SHEET 2 OF 154

MATERIAL TOLERANCES

(IF USED ON PROJECT)

SURFACE	
- PAVEMENT (TOTAL THICKNESS)	+/- 1/4"
- AGGREGATE SURFACE COURSE	+/- 1/2"
SUBBASE	+/- 1"
SAND BORROW	+/- 1"

* MAXIMUM ALGEBRAIC DIFFERENCE IN CROSS SLOPE BETWEEN SHOULDER ON HIGH SIDE OF SUPERELEVATION AND ADJACENT TRAVEL WAY SHALL BE 7%.

** 1 1/4" TYPE IVS WEARING COURSE OVER
1 1/4" TYPE IVS BINDER COURSE OVER

*** 1 1/4" TYPE IVS WEARING COURSE OVER
1 1/4" TYPE IVS BINDER COURSE OVER
2 1/2" TYPE IIS BASE COURSE

**** OMIT 12" SAND BORROW WITHIN THE LIMITS OF MSE WALL PAY LIMITS.

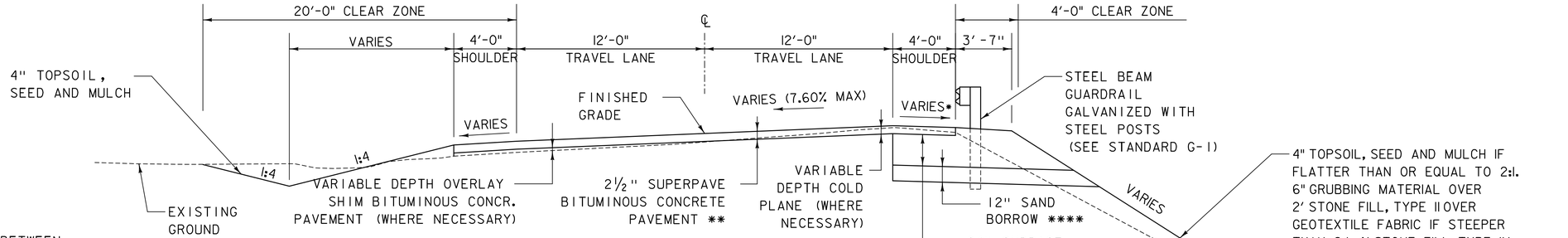

U.S. ROUTE 2
TYPICAL BANKED OVERLAY SECTION

SCALE 3/8" = 1'-0"

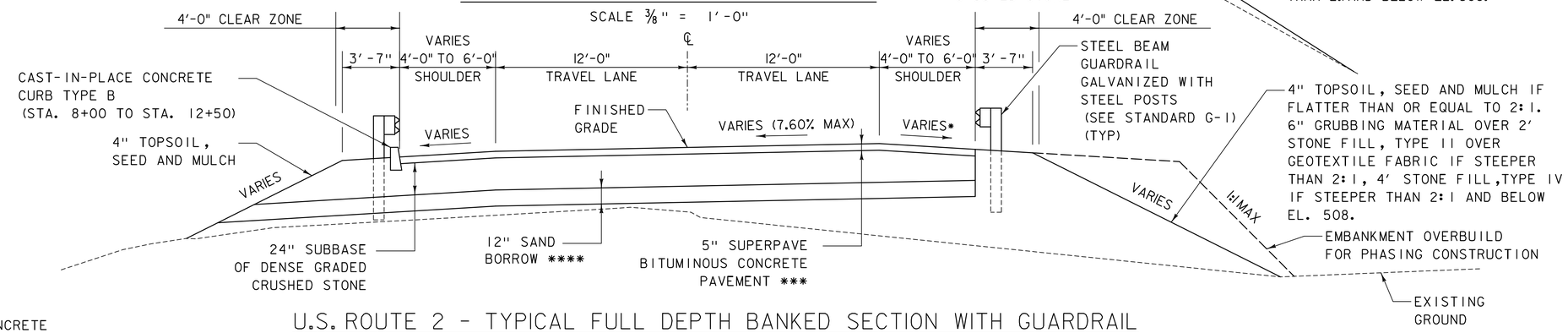

U.S. ROUTE 2 - TYPICAL FULL DEPTH BANKED SECTION WITH GUARDRAIL

SCALE 3/8" = 1'-0"

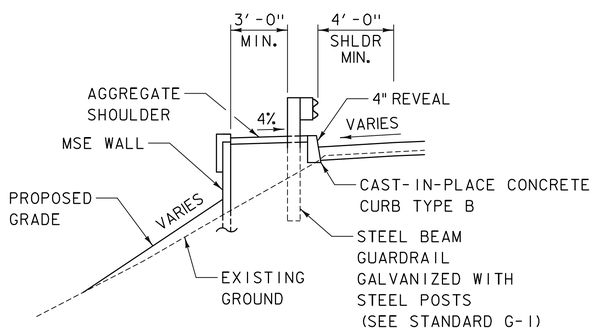

MSE WALL #1 SECTION

SCALE 3/8" = 1'-0"

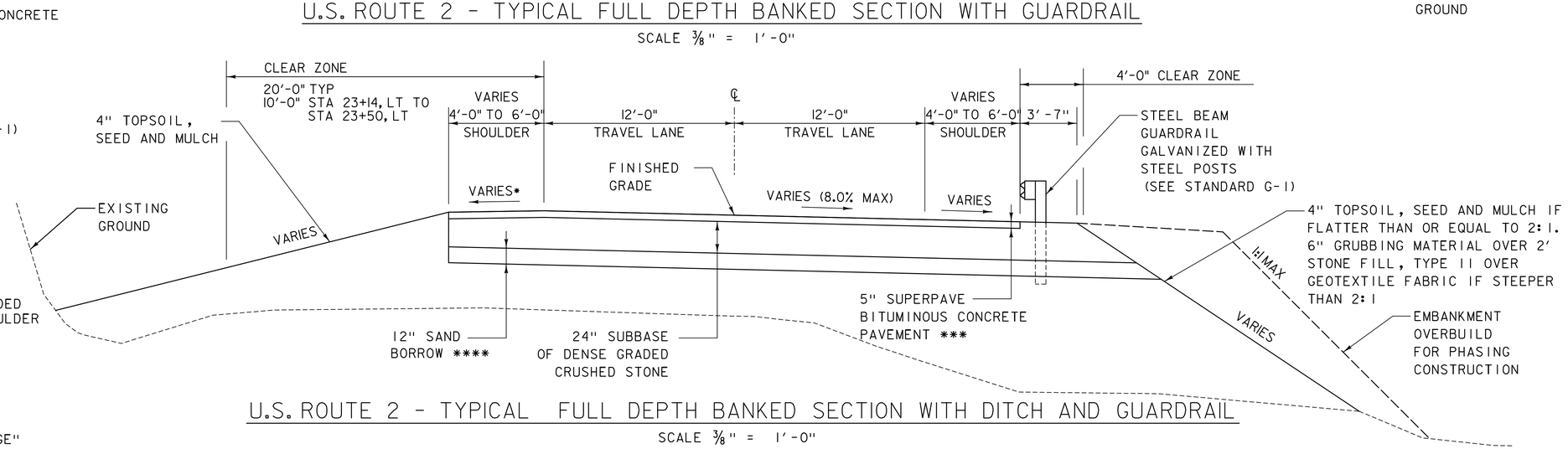

U.S. ROUTE 2 - TYPICAL FULL DEPTH BANKED SECTION WITH DITCH AND GUARDRAIL

SCALE 3/8" = 1'-0"

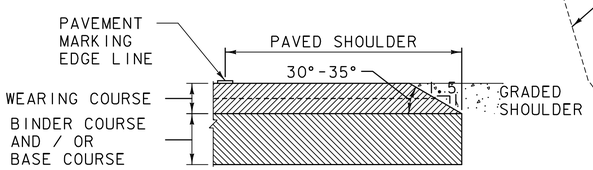

SAFETY EDGE DETAIL

NOT TO SCALE

NOTE: LEVELING COURSE MAY INCLUDE THE "SAFETY EDGE" AT THE CONTRACTOR'S CHOICE.

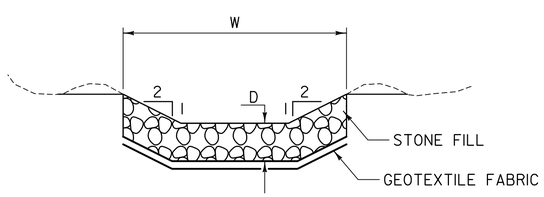

TYPICAL STONE DITCH SECTION

NOT TO SCALE

NOTE: SEE LAYOUT SHEETS 1-5 FOR ADDITIONAL DETAILS AND LOCATIONS.

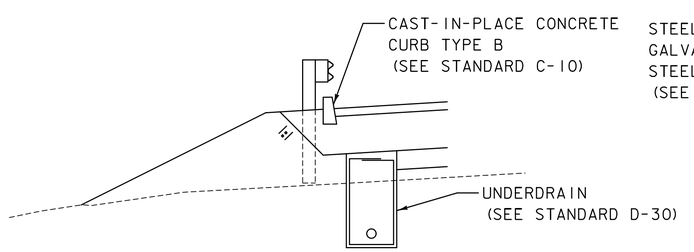

UNDERDRAIN DETAIL IN CURBED AREA

SCALE 3/8" = 1'-0"

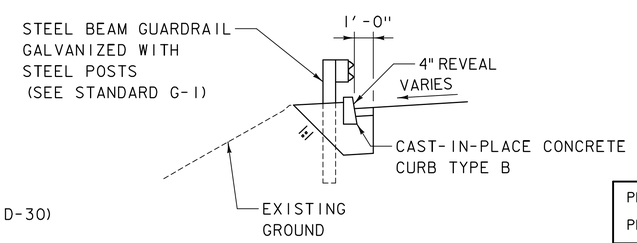

CURB DETAIL IN OVERLAY AREA

SCALE 3/8" = 1'-0"

NOTE:
TACK COAT: EMULSIFIED ASPHALT SHALL BE APPLIED TO THE COLD PLANED BITUMINOUS CONCRETE PAVEMENT SURFACE AT THE RATE OF 0.040 GAL./S.Y. OR AS DIRECTED BY THE ENGINEER. EMULSIFIED ASPHALT SHALL ALSO BE APPLIED BETWEEN ALL LIFTS OF PAVEMENT. THE COST SHALL BE PAID UNDER ITEM 404.65, "EMULSIFIED ASPHALT".

PROJECT NAME: MIDDLESEX	
PROJECT NUMBER: IM 089-2(41)	
FILE NAME: z07a052typl.dgn	PLOT DATE: 1/3/2015
PROJECT LEADER: R. HEBERT	DRAWN BY: D. BURHANS
DESIGNED BY: D. BURHANS	CHECKED BY: D. BRYANT
ROADWAY TYPICAL SECTIONS	SHEET 3 OF 154

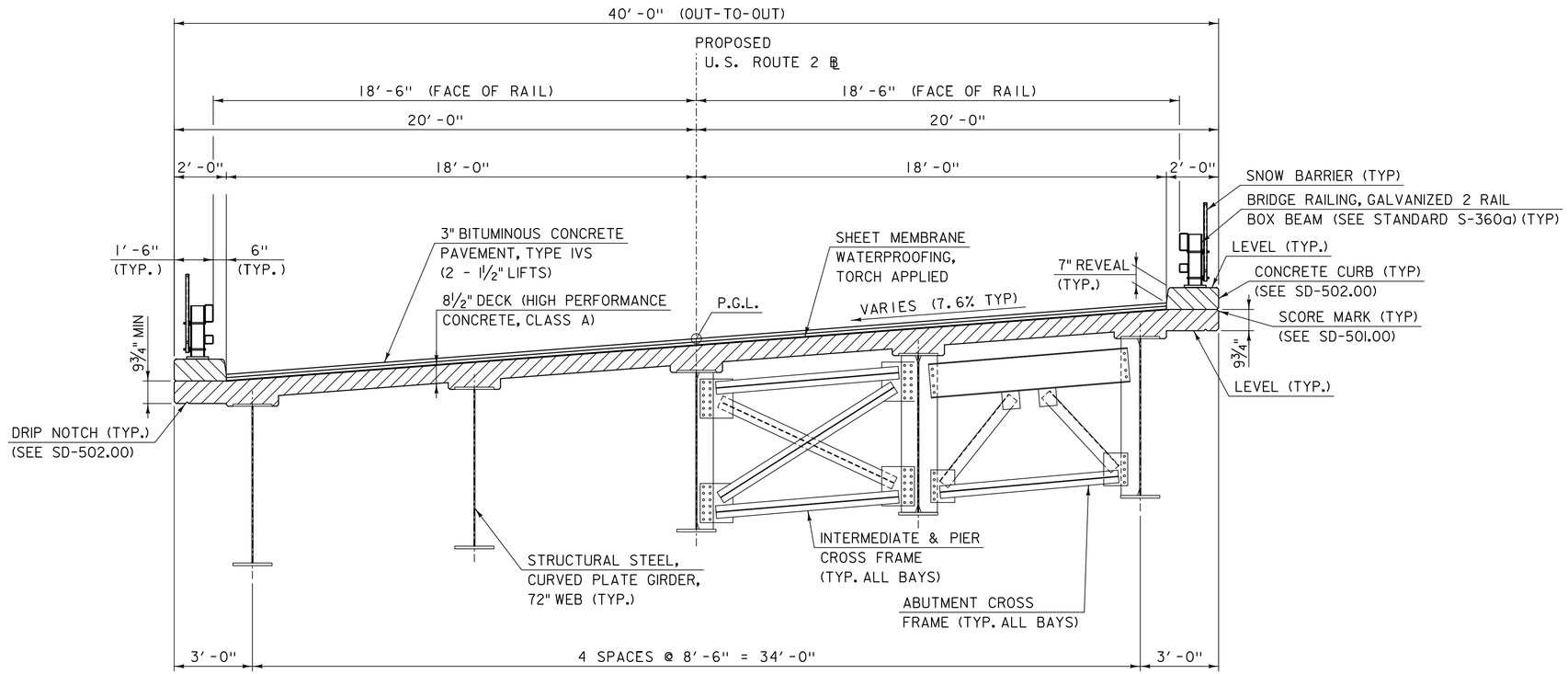

BRIDGE TYPICAL SECTION

SCALE ⅜" = 1'-0"

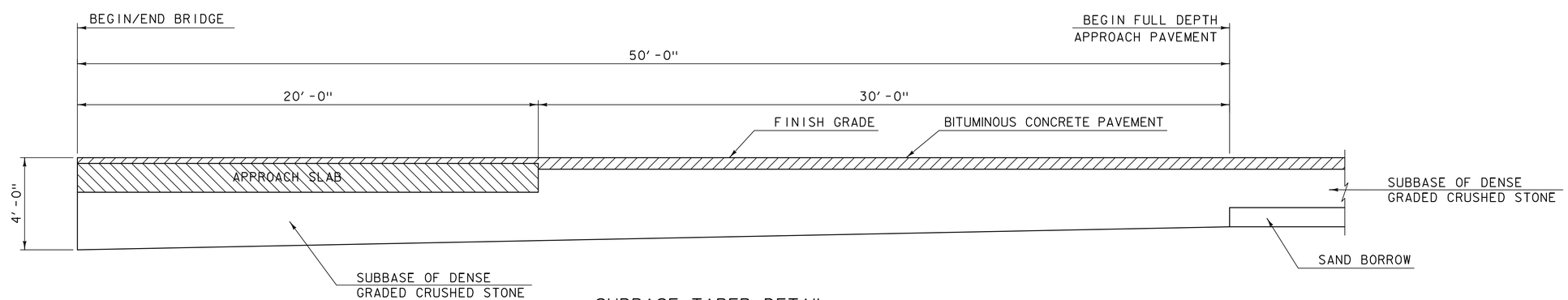

SUBBASE TAPER DETAIL

SCALE ⅜" = 1'-0"

PROJECT NAME: MIDDLESEX	
PROJECT NUMBER: IM 089-2(41)	
FILE NAME: z07a052bdrts.dgn	PLOT DATE: 1/3/2015
PROJECT LEADER: R. HEBERT	DRAWN BY: S. MORGAN
DESIGNED BY: J. OLUND	CHECKED BY: R. HEBERT
BRIDGE TYPICAL SECTION	SHEET 4 OF 154

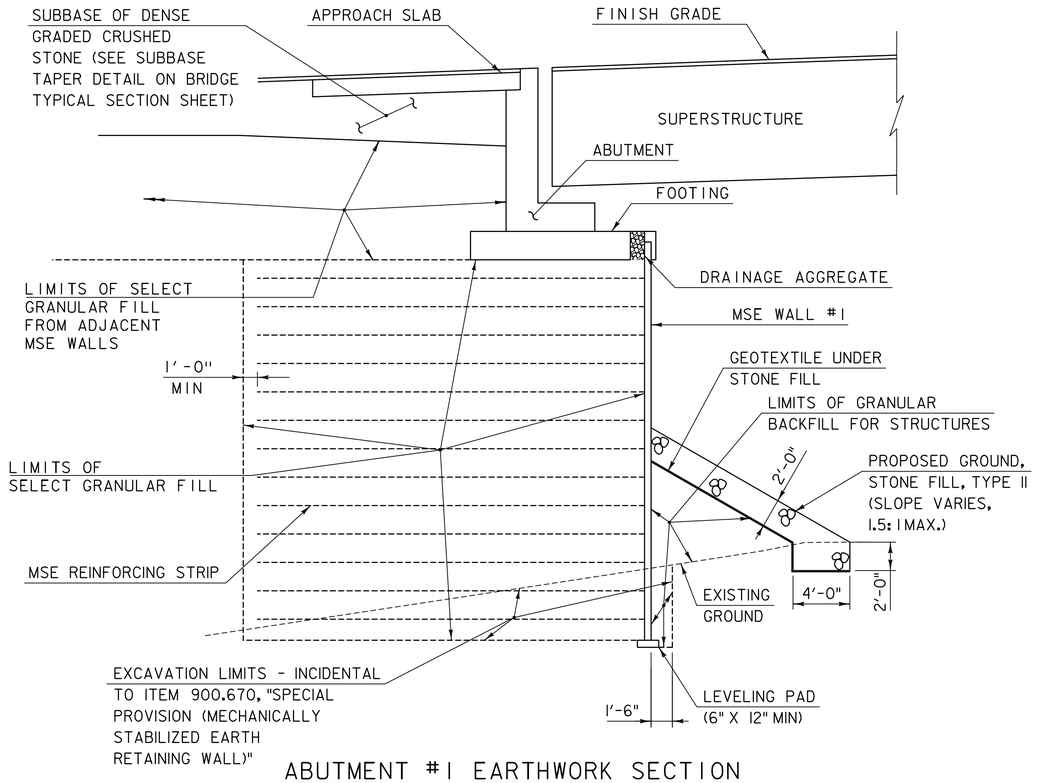

ABUTMENT #1 EARTHWORK SECTION

(NOT TO SCALE)

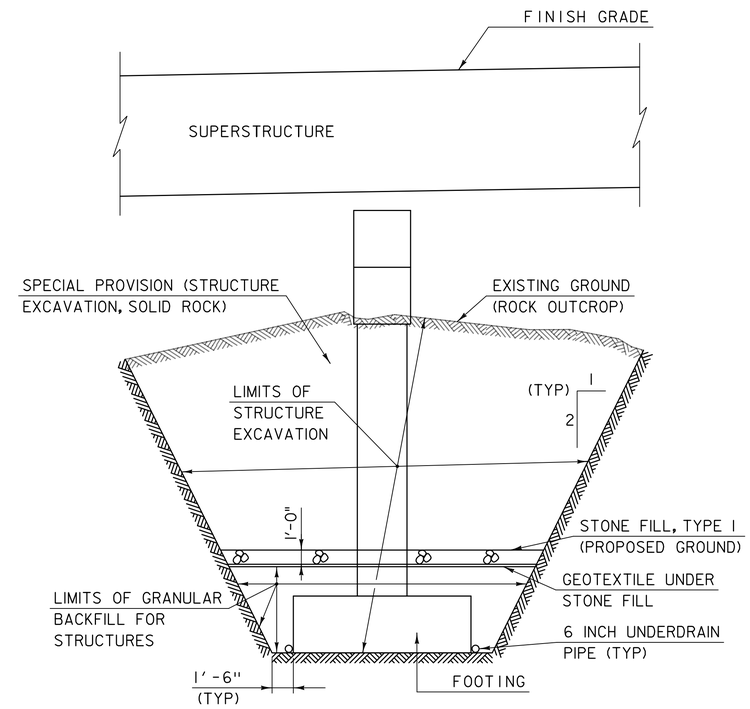

PIER #1 EARTHWORK SECTION

(NOT TO SCALE)

NOTES:

1. ONE FT UNDERCUT AS DETERMINED NECESSARY BY THE ENGINEER.

2. ACTUAL LIMITS OF STRUCTURE EXCAVATION TO BE DETERMINED BY THE CONTRACTOR. HOWEVER, ONLY THE EXCAVATION BETWEEN THE LIMITS SHOWN WILL BE PAID FOR UNDER ITEM 204.25, "STRUCTURE EXCAVATION." EXCAVATION BY THE CONTRACTOR OUTSIDE THESE LIMITS WILL BE AT THE EXPENSE OF THE CONTRACTOR.

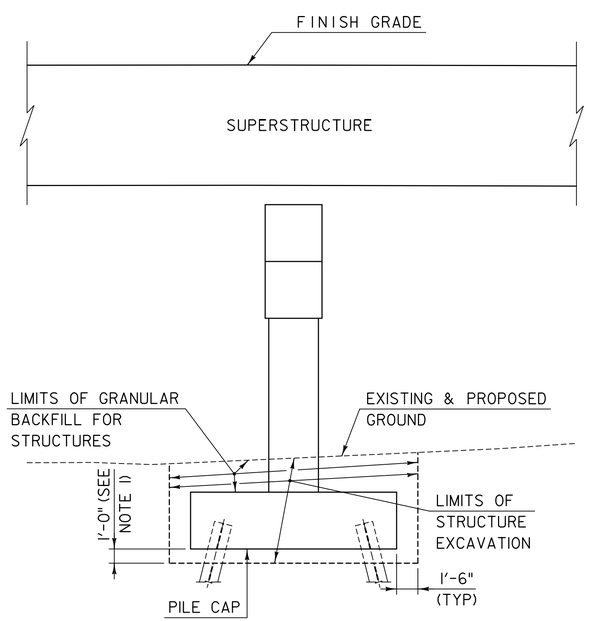

PIER #2 EARTHWORK SECTION

(NOT TO SCALE)

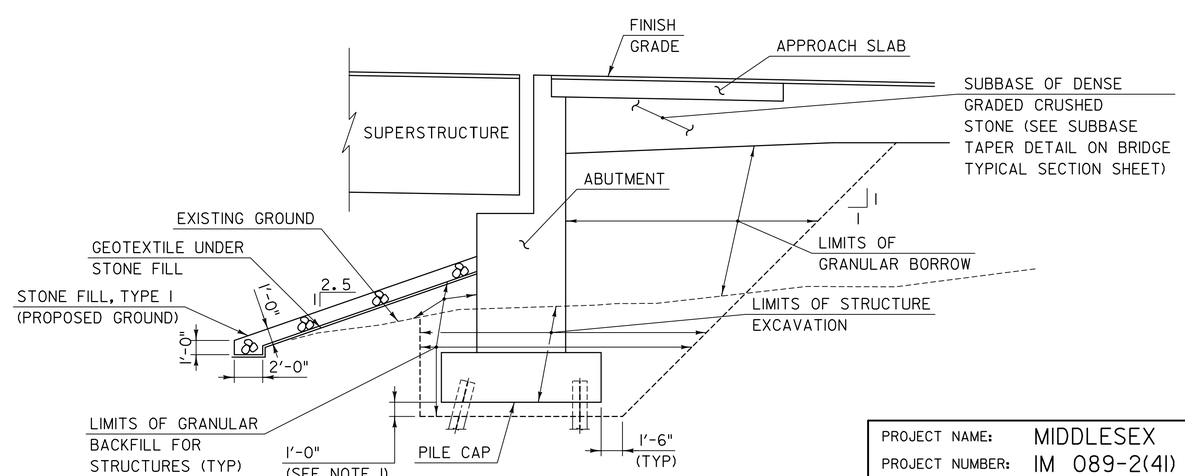

ABUTMENT #2 EARTHWORK SECTION

(NOT TO SCALE)

PROJECT NAME: MIDDLESEX	
PROJECT NUMBER: IM 089-2(41)	
FILE NAME: z07a052bdrbew.dgn	PLOT DATE: 1/3/2015
PROJECT LEADER: R. HEBERT	DRAWN BY: S. MORGAN
DESIGNED BY: J. OLUND	CHECKED BY: R. HEBERT
EARTHWORK TYPICAL SECTIONS	SHEET 5 OF 154

GENERAL

1. ALL MATERIALS AND CONSTRUCTION SHALL CONFORM TO STATE OF VERMONT AGENCY OF TRANSPORTATION STANDARD SPECIFICATIONS FOR CONSTRUCTION, DATED 2011, WITH ITS LATEST REVISIONS AND THE AASHTO LRFD BRIDGE DESIGN SPECIFICATIONS, 6TH EDITION WITH INTERIMS THROUGH 2013.

2. THE EXISTING STEEL IS PAINTED WITH A MATERIAL THAT MAY CONTAIN LEAD. THE CONTRACTOR SHALL FOLLOW ALL APPLICABLE REGULATIONS WHEN HANDLING AND WORKING WITH THIS STEEL. THE REMOVED STRUCTURAL STEEL IS THE PROPERTY OF THE CONTRACTOR. THE CONTRACTOR SHALL INDEMNIFY AND HOLD THE STATE AND ITS OFFICERS AND EMPLOYEES HARMLESS CONCERNING THE CONTRACTOR'S USE OR DISPOSAL OF THE REMOVED EXISTING STRUCTURAL STEEL.

3. THE EXISTING SUPERSTRUCTURE AND CONCRETE PORTIONS OF THE ABUTMENT SHALL BE REMOVED IN THEIR ENTIRETY. THE EXISTING PIERS WITHIN THE EXISTING RAILROAD ROW SHALL BE REMOVED TO THE BOTTOM OF FOOTING. ALL OTHER EXISTING PIERS SHALL BE REMOVED TO THE TOP OF FOOTING. THE SUPERSTRUCTURE SHALL BE DISMANTLED TO AVOID DROPPING MATERIALS ONTO THE RAILROAD AND INTERSTATE. THE CONTRACTOR'S METHOD(S) FOR REMOVAL OF THE EXISTING STRUCTURE INCLUDING THE DESIGNS OF TEMPORARY SHEETING, SHORING, OR OTHER TEMPORARY WORKS SHALL BE APPROVED BY THE ENGINEER PRIOR TO ANY REMOVAL WORK. PAYMENT FOR STRUCTURE REMOVAL AND ANY SHEETING, SHORING, OR OTHER TEMPORARY WORKS REQUIRED FOR REMOVAL SHALL BE MADE UNDER ITEM, 529.15, "REMOVAL OF STRUCTURE."

4. PAYMENT FOR MAINTAINING PORTIONS OF THE EXISTING STRUCTURE AND ROADWAY FOR ACCEPTABLE USE DURING PHASED CONSTRUCTION WILL BE MADE UNDER ITEM 527.10, "MAINTENANCE OF STRUCTURES AND APPROACHES."

5. ALL DIMENSIONS SHOWN IN THE PLANS ARE HORIZONTAL OR VERTICAL AT 45°F, UNLESS NOTED OTHERWISE.

6. NO PROVISIONS HAVE BEEN MADE FOR THE CONTRACTOR TO PERFORM WORK OR SET UP STAGING OUTSIDE THE EXISTING AND PROPOSED RIGHT-OF-WAY.

7. THE CONTRACTOR IS NOTIFIED THAT EXISTING UNDERGROUND TELECOMMUNICATION LINES ARE WITHIN THE CONSTRUCTION LIMITS. SEE THE UTILITY SPECIAL PROVISIONS FOR ADDITIONAL INFORMATION AND REQUIREMENTS. THE CONTRACTOR SHALL BE RESPONSIBLE FOR COSTS ASSOCIATED WITH COORDINATION WITH THE UTILITY COMPANY, IF NEEDED.

8. THE EXISTING UTILITY CONDUIT ON THE BRIDGE IS ABANDONED AND IS TO BE REMOVED BY THE CONTRACTOR TO THE LIMITS REQUIRED TO PERFORM THE WORK.

9. THE LOCATION OF EXISTING UNDERGROUND UTILITIES AND DRAINAGE SHOWN ON THE PLANS AND CROSS SECTIONS IS APPROXIMATE AND SHOULD BE VERIFIED BY THE CONTRACTOR.

10. NO EXISTING DRAINAGE SHALL BE ABANDONED, REMOVED, OR PLUGGED WITHOUT PRIOR APPROVAL OF THE ENGINEER.

11. THE CONTACTOR SHALL COORDINATE WORK NEAR AND WITHIN THE RAILROAD ROW IN ACCORDANCE WITH THE RAILROAD AGREEMENT IN THE CONTRACT DOCUMENTS.

12. THE GRADE OF PG ASPHALT BINDER USED TO PRODUCE BITUMINOUS CONCRETE PAVEMENT SHALL BE 58-28. SUBSTITUTIONS WILL BE ACCEPTED BASED ON AVAILABILITY WHERE THE UPPER END TEMPERATURE VALUE IS GREATER THAN 58°C (136°F) AND/OR THE LOWER END TEMPERATURE VALUE IS LESS THAN -28°C (-18°F).

EARTHWORK AND RELATED ITEMS

13. ITEMS 613.10 "STONE FILL, TYPE I" AND 613.11 "STONE FILL, TYPE II" UNDER THE BRIDGE AS SHOWN IN THE PLANS SHALL BE PLACED BEFORE THE SUPERSTRUCTURE IS SET.

14. ITEM 613.10, "STONE FILL, TYPE I" SHALL BE USED TO REPAIR AREAS OF EMBANKMENT AND SLOPE EROSION AS ORDERED BY THE ENGINEER AND TO CONSTRUCT STONE DITCHES AS DETAILED IN THE PLANS.

15. EXISTING PAVEMENT FROM STA. ~9+75 TO ~11+75 AND FROM ~18+75 TO ~27+25 SHALL BE REMOVED. THIS REMOVAL SHALL BE PAID FOR UNDER ITEM 203.15, "COMMON EXCAVATION". ANY VOID CREATED FROM THIS REMOVAL WHICH IS BELOW PROPOSED SUBGRADE AND/OR OUTSIDE THE PROPOSED PAVEMENT STRUCTURE SHALL BE BACKFILLED WITH EARTH BORROW. ANY VOID CREATED FROM THE REMOVAL OF EXISTING PAVEMENT WHICH IS WITHIN THE PROPOSED PAVEMENT STRUCTURE SHALL BE BACKFILLED SUCH THAT THE FINISHED PAVEMENT STRUCTURE IS IN AGREEMENT WITH THE MATERIALS AND DEPTHS OF THOSE MATERIALS AS SPECIFIED ON THE TYPICAL SECTIONS.

CONCRETE

16. SUBSTRUCTURE AND APPROACH SLAB CONCRETE SHALL BE IN ACCORDANCE WITH ITEM 501.34 "CONCRETE, HIGH PERFORMANCE CLASS B." DECK AND CURB CONCRETE SHALL BE IN ACCORDANCE WITH ITEM 501.33, "CONCRETE, HIGH PERFORMANCE CLASS A."

17. SUPERSTRUCTURE DECK CONCRETE SHALL BE PLACED ACCORDING TO THE SEQUENCE SHOWN IN THE PLANS. A MINIMUM OF 5 DAYS SHALL ELAPSE BETWEEN SUCCESSIVE PARTIAL PLACEMENTS.

18. THE USE OF STAY-IN-PLACE FORMS FOR SUPERSTRUCTURE DECK CONSTRUCTION IS ALLOWED AND, IF INCORPORATED IN TO THE PROJECT, SHALL BE IN ACCORDANCE WITH SUBSECTION 501.09.

19. WHEN POURING THE DECK, THE CONCRETE SHALL BE DEPOSITED PARALLEL TO THE CENTERLINE OF BEARING SO AS TO LOAD THE BEAMS EQUALLY.

20. FLEMING BRACKETS OR SIMILAR FALSEWORK SHALL BE SPACED AS REQUIRED BY DESIGN, BUT SHALL BE LIMITED TO A MAXIMUM SPACING OF 4'-0". THE DESIGN OF THE FALSEWORK SHALL BE THE RESPONSIBILITY OF THE CONTRACTOR.

21. JOINTS AND SCORE MARKS IN CONCRETE SHALL BE CONSTRUCTED AS INDICATED ON THE PLANS OR AS DIRECTED BY THE ENGINEER.

22. CONSTRUCTION JOINT SHEAR KEYS SHALL BE MONOLITHIC AND CONTINUOUS FOR THE LENGTH OF THE CONSTRUCTION JOINT.

23. ITEM 514.10, "WATER REPELLENT, SILANE", SHALL BE APPLIED TO ALL EXPOSED CONCRETE SURFACES, EXCEPT THE UNDERSIDE OF THE DECK BETWEEN DRIP NOTCHES. WATER REPELLENT FOR THE MSE WALL PANELS MAY BE APPLIED ON SITE, PRIOR TO ASSEMBLY.

24. IN ACCORDANCE WITH STANDARD SPECIFICATION SUBSECTION 506.23(A) AND AS DIRECTED BY THE ENGINEER, THE CONTRACTOR SHALL TAKE MEASURES NECESSARY TO PROTECT THE MSE WALLS AND ABUTMENTS FROM STAINING DUE TO OXIDE FORMATION ON THE STRUCTURAL STEEL PRIOR TO DECK PLACEMENT. THESE MEASURES WILL NOT BE PAID SEPARATELY, BUT SHALL BE CONSIDERED INCIDENTAL TO ITEM 506.56, "STRUCTURAL STEEL, CURVED PLATE GIRDER". ANY SUCH STAINING THAT OCCURS PRIOR TO DECK PLACEMENT SHALL BE REMOVED AT NO ADDITIONAL COST TO THE STATE.

25. ALL LEVEL II REINFORCING STEEL LAP SPLICE LENGTHS WERE DESIGNED ASSUMING DUAL-COATED STEEL.

26. ALL REINFORCING BAR PLACEMENT TOLERANCES SHALL BE AS FOLLOWS:

SPACING	+/- 1 INCH
CLEARANCE	+/- ¼ INCH

27. UNLESS NOTED OTHERWISE, MINIMUM CLEAR COVER FOR REINFORCING SHALL BE AS FOLLOWS:

ALONG TOP SURFACE OF DECK SLAB (GFRP)	1.5 INCH
ALONG BOTTOM SURFACE OF DECK SLAB (GFRP)	1.5 INCH
SURFACES CAST AGAINST EARTH (STEEL)	3.0 INCH
CURBS (GFRP)	1.5 INCH
PIER SHAFT AND CAP (STEEL)	3.5 INCH
ELSEWHERE, UNLESS NOTED OTHERWISE	2.0 INCH

PILE FOUNDATIONS

28. THE PILES SHALL BE HP 12 X 74.

29. PILE SHOES ARE REQUIRED AND SHALL CONFORM TO SUBSECTION 505.04(F) OF THE STANDARD SPECIFICATIONS.

30. FOR ESTIMATING PURPOSES, THE PILE TIP ELEVATIONS WERE ASSUMED AS SHOWN ON THE BORING LOGS. THE ACTUAL LENGTHS MAY VARY.

31. THE PILES SHALL BE DRIVEN TO THE NOMINAL RESISTANCE LISTED BELOW AS DETERMINED BY THE RESULTS OF DYNAMIC TESTING, AS INTERPRETED BY THE ENGINEER.

    MINIMUM NOMINAL RESISTANCE:
    PIER 2 = 755 KIP
    ABUTMENT 2 = 400 KIP

32. TO ENSURE THAT THE NOMINAL RESISTANCE HAS BEEN ATTAINED AND TO PREVENT THE OVERSTRESSING OF THE PILES DURING DRIVING OPERATIONS, DYNAMIC TESTING SHALL BE PERFORMED IN ACCORDANCE WITH SUBSECTION 505.04(d)-2 OF THE STANDARD SPECIFICATIONS. ONE PILE TEST SHALL BE CONDUCTED ON THE FIRST PILE DRIVEN AT PIER 2 AND THE FIRST PILE DRIVEN AT ABUTMENT 2, FOR A TOTAL OF TWO (2) TESTS. MORE TESTS MAY BE REQUIRED BY THE ENGINEER. PAYMENT FOR THESE TESTS SHALL BE MADE UNDER ITEM 505.45, "DYNAMIC PILE LOAD TEST."

FOOTINGS ON BEDROCK

33. FOOTINGS FOR SUBSTRUCTURES FOUNDED ON BEDROCK SHALL BE PLACED ON CLEAN COMPETENT ROCK. ALL LOOSE ROCK AND DEBRIS SHALL BE REMOVED. ALL LOOSE ROCK AND DEBRIS SHALL BE REMOVED.

34. UPON COMPLETION OF THE EXCAVATION FOR SUBSTRUCTURES FOUNDED ON BEDROCK AND PRIOR TO PLACING FORMWORK, THE ENGINEER SHALL NOTIFY THE PROJECT MANAGER AND SOILS AND FOUNDATION ENGINEER. THE SOILS AND FOUNDATION ENGINEER WILL DETERMINE IF THE BEDROCK IS COMPETENT TO OBTAIN THE NOMINAL BEARING RESISTANCE AS SHOWN ON THE PLANS. FIVE (5) WORKING DAYS FROM NOTIFICATION SHALL BE ALLOWED TO MAKE THE INSPECTION AND THE DETERMINATION FOR THE COMPETENCY OF THE BEDROCK.

35. ONCE THE ELEVATION OF COMPETENT BEDROCK HAS BEEN DETERMINED, THE CONTRACTOR SHALL PROVIDE A BEDROCK PROFILE TO THE PROJECT MANAGER TO DETERMINE WHETHER THE DESIGN BOTTOM OF FOOTING ELEVATION SHALL BE ADJUSTED AND WHETHER A SUBFOOTING SHALL BE REQUIRED. FOOTING ELEVATIONS SHALL NOT BE ADJUSTED WITHOUT APPROVAL OF THE PROJECT MANAGER. THREE (3) WORKING DAYS FROM RECEIPT OF THE BEDROCK PROFILE SHALL BE ALLOWED TO MAKE THIS DETERMINATION. NO WORK SHALL BE DONE ON THE FOOTINGS UNTIL A REPLY IS RECEIVED.

36. IF NECESSARY, THE LIMITS OF SUBFOOTINGS SHALL BE 1 FT OUTSIDE THE HORIZONTAL LIMITS OF THE FOOTING. ANY CONCRETE REQUIRED FOR SUBFOOTINGS SHALL BE PAID FOR WITH ITEM 541.30, "CONCRETE, CLASS C." AN ESTIMATED QUANTITY OF 15 CY OF ITEM 541.30 HAS BEEN INCLUDED IN THE CONTRACT. THE TOP SURFACE OF THE SUBFOOTING SHALL BE INTENTIONALLY ROUGHENED TO A ¼ INCH AMPLITUDE.

37. ANY BEDROCK THAT NEEDS TO BE REMOVED SHALL BE PAID FOR UNDER ITEM 204.25, "STRUCTURE EXCAVATION." VERTICALLY MEASURED OVER-BREAKAGE BEYOND THE AVERAGE MAXIMUM ALLOWANCE SPECIFIED IN SUBSECTIONS 204.09 (B) (1) WILL BE AT THE CONTRACTOR'S EXPENSE.

STRUCTURAL STEEL

38. UNLESS NOTED OTHERWISE, ALL NEW STRUCTURAL STEEL SHALL CONFORM TO AASHTO M 270 GRADE 50W (UNPAINTED) AND SHALL BE PAID UNDER ITEM 506.56, "STRUCTURAL STEEL, CURVED PLATE GIRDER."

39. OVERSIZED AND SLOTTED CONNECTION HOLES ARE NOT PERMITTED. PUNCHING CONNECTION HOLES FULL SIZE WILL NOT BE ALLOWED.

40. BEARING STIFFENERS SHALL BE PLUMB AFTER ERECTION AND DEAD LOADING OF STRUCTURE; INTERMEDIATE CONNECTOR PLATES MAY EITHER BE PLUMB OR NORMAL TO THE TOP FLANGE.

41. CROSS FRAMES SHALL BE DETAILED AND FABRICATED TO FIT UNDER FULL DEAD LOAD. ALL CROSS FRAMES ARE RADIAL.

42. TO THE LIMITS SHOWN ON THE GIRDER ELEVATIONS, THE GIRDER ENDS INCLUDING BEARING STIFFENERS AND CROSS FRAMES SHALL BE PAINTED WITH A SYSTEM 1 – OZ/E/U PAINT AND GREASE COATED IN ACCORDANCE WITH "SPECIAL PROVISION (QC/QA CLEANING AND PAINTING STRUCTURAL COMPONENTS)." FAYING SURFACES OF CONNECTIONS SHALL REMAIN FREE OF PAINT AND GREASE COATINGS. THE PAINT SHALL BE BROWN, FEDERAL STANDARD 595, COLOR CHIP 20059.

43. A MINIMUM OF TWO ADJACENT GIRDERS AND ADJOINING CROSS FRAMES SHALL BE ERECTED IN A GIVEN SPAN PRIOR TO ERECTING THE FOLLOWING SPAN. AT NO TIME SHALL MORE THAN TWO GIRDER SEGMENTS OF A SINGLE GIRDER BE ERECTED WITHOUT BEING CONNECTED TO AN ADJACENT GIRDER THROUGH THE USE OF CROSS FRAMES.

STATE OF VERMONT
AGENCY OF TRANSPORTATION

QUANTITY SHEET 1

SUMMARY OF ESTIMATED QUANTITIES					TOTALS		DESCRIPTIONS			
ROADWAY	TRAINING	EROSION CONTROL	BRIDGE	FULL C.E. ITEMS	GRAND TOTAL	FINAL	UNIT	ITEMS	ITEM NUMBER	ROUND
1					1		LS	CLEARING AND GRUBBING, INCLUDING INDIVIDUAL TREES AND STUMPS	201.10	
3250					3250		CY	COMMON EXCAVATION	203.15	
			150		150		CY	SOLID ROCK EXCAVATION	203.16	
26800					26800		CY	EARTH BORROW	203.30	
1530					1530		CY	SAND BORROW	203.31	
			55		55		CY	GRANULAR BORROW	203.32	
450					450		CY	TRENCH EXCAVATION OF EARTH	204.20	
120					120		CY	TRENCH EXCAVATION OF ROCK	204.21	
10			390		400		CY	STRUCTURE EXCAVATION	204.25	
			320		320		CY	GRANULAR BACKFILL FOR STRUCTURES	204.30	
670					670		SY	COLD PLANING, BITUMINOUS PAVEMENT	210.10	
5490					5490		CY	SUBBASE OF DENSE GRADED CRUSHED STONE	301.35	
43			26.4		69.4		CWT	EMULSIFIED ASPHALT	404.65	
1					1		LU	PRICE ADJUSTMENT, ASPHALT CEMENT (N.A.B.I.)	406.50	
1300			366		1666		TON	SUPERPAVE BITUMINOUS CONCRETE PAVEMENT	490.30	
1					1		LU	MAT DENSITY PAY ADJUSTMENT (N.A.B.I.)	490.32	
			669		669		CY	CONCRETE, HIGH PERFORMANCE CLASS A	501.33	
			617		617		CY	CONCRETE, HIGH PERFORMANCE CLASS B	501.34	
			1		1		LS	FURNISHING EQUIPMENT FOR DRIVING PILING	504.10	
			820		820		LF	STEEL PILING, HP 12 X 74	505.16	
			2		2		EACH	DYNAMIC PILE LOADING TEST	505.45	
			1091000		1091000		LB	STRUCTURAL STEEL, CURVED PLATE GIRDER	506.56	
1000			42600		43600		LB	REINFORCING STEEL, LEVEL I	507.11	
			71900		71900		LB	REINFORCING STEEL, LEVEL II	507.12	
			1		1		LS	SHEAR CONNECTORS (4040 - 7/8" X 7")	508.15	
			131		131		GAL	WATER REPELLENT, SILANE	514.10	
			72		72		LF	BRIDGE EXPANSION JOINT, VERMONT	516.11	
			2026		2026		SY	SHEET MEMBRANE WATERPROOFING, TORCH APPLIED	519.20	
			144		144		LF	JOINT SEALER, HOT POURED	524.11	
			1039		1039		LF	BRIDGE RAILING, GALVANIZED 2 RAIL BOX BEAM	525.33	
			1		1		LS	MAINTENANCE OF STRUCTURES AND APPROACHES	527.10	
			1		1		EACH	REMOVAL OF STRUCTURE (22975 SF - EST)	529.15	
			20		20		EACH	BEARING DEVICE ASSEMBLY, ELASTOMERIC PAD W/ EXT. LOAD PLATES	531.18	
9					9		CY	CONCRETE, CLASS B	541.25	
			15		15		CY	CONCRETE, CLASS C	541.30	
								BEGIN OPTION AA		
200					200		LF	24" CAAP .060 (2-2/3 X 1/2)	601.0225	
200					200		LF	24" PCCSP .064 (2-2/3 X 1/2)	601.0425	
200					200		LF	24" RCP CLASS III	601.0825	
200					200		LF	24" CPEP(SL)	601.2620	

DETAILED SUMMARY OF QUANTITIES

QUANTITIES	UNIT	ITEMS

PROJECT NAME: MIDDLESEX
PROJECT NUMBER: IM 089-2(41)

FILE NAME: $$$$FILENAME$$$$
PROJECT LEADER: R. HEBERT
DESIGNED BY: D. BURHANS
QUANTITY SHEET - 1

PLOT DATE: $$$$DATE$$$$
DRAWN BY: D. BURHANS
CHECKED BY: R. HEBERT
SHEET 7 OF 154

STATE OF VERMONT
AGENCY OF TRANSPORTATION

QUANTITY SHEET 2

SUMMARY OF ESTIMATED QUANTITIES					TOTALS		DESCRIPTIONS			
ROADWAY	TRAINING	EROSION CONTROL	BRIDGE	FULL C.E. ITEMS	GRAND TOTAL	FINAL	UNIT	ITEMS	ITEM NUMBER	ROUND
								END OPTION AA		
								BEGIN OPTION BB		
138					138		LF	30" CAAP .075 (3 X 1)	601.0306	
138					138		LF	30" PCCSP .079 (2-2/3 X 1/2)	601.0436	
138					138		LF	30" RCP CLASS III	601.0835	
138					138		LF	30" CPEP(SL)	601.2625	
								END OPTION BB		
								BEGIN OPTION CC		
82.5					82.5		LF	42" CAAP .075 (3 X 1)	601.0316	
82.5					82.5		LF	42" PCCSP .109 (2-2/3 X 1/2)	601.0452	
82.5					82.5		LF	42" RCP CLASS III	601.0850	
82.5					82.5		LF	42" CPEP(SL)	601.2635	
								END OPTION CC		
130					130		LF	60" RCP CLASS IV	601.0866	
3					3		EACH	PRECAST REINFORCED CONCRETE DROP INLET WITH CAST IRON GRATE	604.18	
225					225		LF	6 INCH UNDERDRAIN PIPE	605.10	
112					112		LF	6 INCH UNDERDRAIN CARRIER PIPE	605.20	
1					1		EACH	UNDERDRAIN FLUSHING BASIN	605.95	
		100			100		HR	POWER GRADER RENTAL	608.15	
		100			100		HR	ALL PURPOSE EXCAVATOR RENTAL, TYPE I	608.25	
		100			100		HR	TRUCK RENTAL	608.37	
		100			100		HR	LOADER RENTAL, TYPE I	608.40	
380					380		MGAL	DUST CONTROL WITH WATER	609.10	
		380			380		CY	STONE FILL, TYPE I	613.10	
		2490			2490		CY	STONE FILL, TYPE II	613.11	
		1570			1570		CY	STONE FILL, TYPE IV	613.13	
710					710		LF	CAST-IN-PLACE CONCRETE CURB, TYPE B	616.28	
1					1		EACH	RELOCATE MAILBOX, SINGLE SUPPORT	617.10	
12					12		EACH	YIELDING MARKER POSTS	619.17	
130					130		LF	WOVEN WIRE FENCE WITH STEEL POSTS	620.25	
			1014		1014		LF	SNOW BARRIER	620.75	
2350					2350		LF	STEEL BEAM GUARDRAIL, GALVANIZED	621.20	
2					2		EACH	MANUFACTURED TERMINAL SECTION, TANGENT	621.51	
1					1		EACH	ANCHOR FOR STEEL BEAM RAIL	621.60	
4					4		EACH	GUARDRAIL APPROACH SECTION, GALVANIZED 2 RAIL BOX BEAM	621.72	
1560					1560		LF	REMOVAL AND DISPOSAL OF GUARDRAIL	621.80	
320					320		HR	UNIFORMED TRAFFIC OFFICERS	630.10	
4000					4000		HR	FLAGGERS	630.15	
				1	1		LS	FIELD OFFICE, ENGINEERS	631.10	
				1	1		LS	TESTING EQUIPMENT, CONCRETE	631.16	

DETAILED SUMMARY OF QUANTITIES

QUANTITIES	UNIT	ITEMS

PROJECT NAME: MIDDLESEX
PROJECT NUMBER: IM 089-2(41)

FILE NAME: $$$$FILENAME$$$$
PROJECT LEADER: R. HEBERT
DESIGNED BY: D. BURHANS
QUANTITY SHEET - 2

PLOT DATE: $$$$DATE$$$$
DRAWN BY: D. BURHANS
CHECKED BY: R. HEBERT
SHEET 8 OF 154

STATE OF VERMONT
AGENCY OF TRANSPORTATION

QUANTITY SHEET 3

SUMMARY OF ESTIMATED QUANTITIES					TOTALS		DESCRIPTIONS			
ROADWAY	TRAINING	EROSION CONTROL	BRIDGE	FULL C.E. ITEMS	GRAND TOTAL	FINAL	UNIT	ITEMS	ITEM NUMBER	ROUND
				1	1		LS	TESTING EQUIPMENT, BITUMINOUS	631.17	
				5000	5000		DL	FIELD OFFICE TELEPHONE (N.A.B.I.)	631.26	
	2080				2080		HR	EMPLOYEE TRAINEESHIP	634.10	
1					1		LS	MOBILIZATION/DEMOBILIZATION	635.11	
4300					4300		LF	DURABLE 4 INCH WHITE LINE	646.400	
3950					3950		LF	DURABLE 4 INCH YELLOW LINE	646.410	
		6200			6200		SY	GEOTEXTILE UNDER STONE FILL	649.31	
		400			400		SY	GEOTEXTILE FOR SILT FENCE	649.51	
		145			145		SY	GEOTEXTILE FOR SILT FENCE, WOVEN WIRE REINFORCED	649.515	
		360			360		LB	SEED	651.15	
		12			12		LB	SEED, WINTER RYE	651.17	
		1460			1460		LB	FERTILIZER	651.18	
		6			6		TON	AGRICULTURAL LIMESTONE	651.20	
		6			6		TON	HAY MULCH	651.25	
1570					1570		CY	TOPSOIL	651.35	
1560					1560		SY	GRUBBING MATERIAL	651.40	
		1			1		LS	EPSC PLAN	652.10	
		160			160		HR	MONITORING EPSC PLAN	652.20	
		1			1		LU	MAINTENANCE OF EPSC PLAN (N.A.B.I.)	652.30	
		6100			6100		SY	TEMPORARY EROSION MATTING	653.20	
		11			11		EACH	VEHICLE TRACKING PAD	653.35	
		480			480		LF	BARRIER FENCE	653.50	
		4780			4780		LF	PROJECT DEMARCATION FENCE	653.55	
		400			400		SF	EROSION LOG	653.60	
5					5		SF	TRAFFIC SIGNS, TYPE A	675.20	
30					30		LF	SQUARE TUBE SIGN POST AND ANCHOR	675.341	
5					5		EACH	REMOVING SIGNS	675.50	
1					1		LU	PRICE ADJUSTMENT, FUEL (N.A.B.I.)	690.50	
			950		950		CY	SPECIAL PROVISION (STRUCTURE EXCAVATION, SOLID ROCK)	900.608	
			179800		179800		LF	SPECIAL PROVISION (REINFORCING BAR, GFRP) (#5)	900.640	
			1		1		LS	SPECIAL PROVISION (QC/QA CLEANING AND PAINTING STRUCTURAL COMPONENTS)	900.645	
1					1		LS	SPECIAL PROVISION (TRAFFIC CONTROL, ALL-INCLUSIVE)	900.645	
1					1		LU	SPECIAL PROVISION (MAINTENANCE OF RAILROAD TRAFFIC)(N.A.B.I.)	900.650	
			11670		11670		SF	SPECIAL PROVISION (MECHANICALLY STABILIZED EARTH RETAINING WALL)	900.670	

DETAILED SUMMARY OF QUANTITIES

QUANTITIES	UNIT	ITEMS

PROJECT NAME: MIDDLESEX
PROJECT NUMBER: IM 089-2(41)

FILE NAME: $$$$FILENAME$$$$
PROJECT LEADER: R. HEBERT
DESIGNED BY: D. BURHANS
QUANTITY SHEET - 3

PLOT DATE: $$$$DATE$$$$
DRAWN BY: D. BURHANS
CHECKED BY: R. HEBERT
SHEET 9 OF 154

STATE OF VERMONT
AGENCY OF TRANSPORTATION

EARTHWORKS

STATION	DIST FT.	TOTAL EXCAVATION EARTH AND ROCK AREA S.F.	TOTAL EXCAVATION EARTH AND ROCK VOLUME C.Y.	ROCK EXCAVATION AREA S.F.	ROCK EXCAVATION VOLUME C.Y.	EMBANKMENT AREA S.F.	EMBANKMENT VOLUME C.Y.	AREA S.F.	VOLUME C.Y.
6+50		0				0			
	50		0				60		
7+00		0				65			
	50		0				121		
7+50		0				66			
	50		6				123		
8+00		7				67			
	50		45				156		
8+50		42				102			
	50		81				183		
9+00		46				96			
	50		103				128		
9+50		65				42			
	50		199				123		
10+00		150				91			
	50		260				277		
10+50		131				208		CUT	1704
	50		231				656	ROCK	0
11+00		118				500		R.FAC	.495
	50		217				1229	FILL	18675
11+50		116				827		F.FAC	1.15
	50		137				2520	EX. F	19772
12+00		32				1895			
	50		78				3650		
12+50		52				2047			
	50		105				3545		
13+00		61				1782			
	50		92				3090		
13+50		38				1555			
	50		93				2127		
14+00		62				742			
	50		57				687		
14+50		0				0			

STATION	DIST FT.	TOTAL EXCAVATION EARTH AND ROCK AREA S.F.	TOTAL EXCAVATION EARTH AND ROCK VOLUME C.Y.	ROCK EXCAVATION AREA S.F.	ROCK EXCAVATION VOLUME C.Y.	EMBANKMENT AREA S.F.	EMBANKMENT VOLUME C.Y.	AREA S.F.	VOLUME C.Y.
	50		0				0		
15+00		0				0			
	50		125				0		
15+50		135				0			
	50		125				0		
16+00		0				0			
	50		0				0		
16+50		0				0			
	50		0				0		
17+00		0				0			
	50		0				0		
17+50		0				0			
	50		0				0		
18+00		0				0			
	50		34				1		
18+50		37				1			
	50		63				166	CUT	769
19+00		31				178		ROCK	0
	50		56				424	R.FAC	0
19+50		29				280		FILL	9980
	50		67				877	F.FAC	1
20+00		43				667		EX. C	-17498
	50		72				1578		
20+50		35				1037			
	50		65				1913		
21+00		35				1029			
	50		58				1890		
21+50		28				1012			
	50		52				1775		
22+00		28				905			
	50		52				1356		
22+50		28				559			

STATION	DIST FT.	TOTAL EXCAVATION EARTH AND ROCK AREA S.F.	TOTAL EXCAVATION EARTH AND ROCK VOLUME C.Y.	ROCK EXCAVATION AREA S.F.	ROCK EXCAVATION VOLUME C.Y.	EMBANKMENT AREA S.F.	EMBANKMENT VOLUME C.Y.	AREA S.F.	VOLUME C.Y.
	50		52				651		
23+00		28				144			
	50		51				214		
23+50		27				87			
	50		52				114		
24+00		29				36			
	50		60				56		
24+50		36				24			
	50		72				38		
2500		42				17			
	50		84				20		
2550		49				5			
	50		89				15		
2600		47				11			
	50		89				218		
2650		49				224			
	50		69				258	CUT	748
2700		26				55		ROCK	0
	50		47				88	R.FAC	0
2750		25				40		FILL	1733
	50		51				37	F.FAC	1
2800		30				0		EX. F	-1245
	50		29				6		
2850		1				6			
	50		2				12		
2900		1				7			
	50		1				6		
2950		0				0			

SUMMARY AND BALANCES

STATION TO STATION		TOT EXC. EARTH & ROCK C.Y.	ROCK EXCAV C.Y.	EMBANK C.Y.	EXCESSES CUT	EXCESSES FILL	ACUMULATIVE EXCESSES CUT	ACUMULATIVE EXCESSES FILL
6+50	14+50	1704		18675		16971		16971
14+50	22+50	769		9980		9211		26182
22+50	29+50	748		1733		985		27167
TOTAL		3221		30388				27167

REMARKS

EARTH AND ROCK EXCAVATION	3221	
SOLID ROCK EXCAVATION	150	SEE NOTES
EARTH EXCAVATION	3071	
PLANIMETERED FILL	30388	
LESS FACTORED SOLID ROCK	195	
LESS DISPLACEMENT OF ANY LARGE STRUCTURES	0	
NET PLANIMETERED FILL	30193	
FACTOR	1	
PLANIMETERED FILL INCLUDING FACTOR	34722	
MATERIALS AVAILABLE FOR FILLS		SEE NOTES
EARTH EXCAVATION	3071	
CHANNEL EXCAVATION	0	
TRENCH EXCAVATION OF EARTH	450	
STRUCTURE EXCAVATION	400	
EXCAVATION FOR MSE WALL(EST.)	3036	
FACTORED SPECIAL PROVISION (STRUCTURE EXCAVATION, SOLID ROCK)	1235	
TOTAL MATERIAL AVAILABLE FOR FILL	8192	
TOTAL FILL INCLUDING FACTOR	34722	
TOTAL MATERIAL FOR FILL	8192	
BORROW	-26530	
EXCESS EXCAVATION		
ROUNDING	270	
ESTIMATED BORROW NEEDED	26800	

STATE OF VERMONT
AGENCY OF TRANSPORTATION

DRAINAGE DETAIL SHEET

STATION	STATION	POS.	PIPE #	INLET/OUTLET TYPE INLET	INLET/OUTLET TYPE OUTLET	DITCH IN	DITCH OUT	PIPE ARCH SPAN IN	PIPE ARCH RISE IN	PIPE ARCH L FT	PIPE D IN	PIPE L FT	ALLOWABLE OPTIONS PCCSP TH	CAAP TH	RCP CL	CSP TH	CPEP SL	PCCSP PI TH	MH EA	PRCMH	CB EA	PRCDI	DEPTH DI FT	CONC CLASS B CY	REINF STEEL LBS	DI GRATE TYPE	CHAN ELEV EA	CRM CY	TRENCH EXCAVATION EARTH CY	TRENCH EXCAVATION ROCK CY	COMM EXC CY	UNC CHAN EXC CY	STRUCT EXCAV CY	GRAN BKFILL STRUCT CY	GRAN BORR CY	EROS MATT SY	STONE FILL CY	STONE FILL TYPE	MARKER POSTS LT EA	MARKER POSTS RT EA	REMARKS
12+25.00	12+25.00	LT-RT	0	DI	STONE						24	48.00	.064	.060	III		X						7.5			E															* NEW 24" OPTION AA PIPE - SEE PIPE PROFILE SHEET
12+75.76	12+72.41	LT-RT	-1.54	STONE	STONE	X	X				60	130.00			IV																										* NEW 60" RCP PIPE - SEE PIPE PROFILE SHEET
22+16.89	22+06.99	LT-RT	-4.17	DI	STONE	X					24	149.00	.064	.060	III		X						7.5			B															* NEW 24" OPTION AA PIPE - SEE PIPE PROFILE SHEET
26+22.70	26+35.31	LT-RT	8.65	STONE	STONE	X					42	82.50	.079	.060	III		X																								NEW 42" OPTION CC PIPE - SEE PIPE PROFILE SHEET
27+47.59	26+41.45	LT-RT	49.38	DI	STONE	X					30	138.00	.064	.060	III		X						6.0			B															NEW 30" OPTION BB PIPE - SEE PIPE PROFILE SHEET
																																								* = IMPERFECT TRENCH METHOD
9+72	9+72	LT-LT																																			7.4	I			DOWN SPOUT
19+45	19+45	LT-LT																																			10.8	I			DOWN SPOUT
20+25	27+61	LT-LT																																			236.3	I			RIPRAP DITCH
15+61	15+85	CL-CL																																			30.9	I			PIER PROTECTION
18+51	18+94.00	CL-CL																																			69.8	I			SLOPE PROTECTION
20+01	22+12	RT-RT																																			2.7	I			PIPE OUTLET PROTECTION
26+27	26+49	RT-RT																																			7.9	I			PIPE OUTLET PROTECTION
8+25	14+19	RT-RT																																			2404.6	II			SLOPE PROTECTION
12+61	13+03	LT-LT																																			43.9	II			PIPE INLET PROTECTION
19+51	20+42	RT-RT																																			221.5	II			SLOPE PROTECTION
9+59	14+19	RT-RT																																			1595.0	IV			SLOPE PROTECTION
12+59	12+85	RT-RT																																			77.8	IV			PIPE OUTLET PROTECTION
22+27	22+14	LT-RT																																							PLUG AND ABANDON EXTG. D.I. AND 18" RCP PIPE
26+12	26+22	LT-RT																																							PLUG AND ABANDON EXTG. 42" CMP PIPE
27+49	27+49	LT-RT																																							PLUG AND ABANDON EXTG. 24" RCP PIPE

NOTES:

1. THE EXISTING PAVEMENT, WHICH IS TO BE REMOVED, IS INCLUDED IN MATERIAL AVAILABLE FOR FILLS
2. NO PORTION OF THE EXISTING BRIDGE ABUTMENTS OR PIERS WERE INCLUDED IN MATERIAL AVAILABLE FOR FILLS, AS IT IS EXPECTED THAT THE BULK OF THE EMBANKEMENTS WILL BE CONSTRUCTED PRIOR TO THE EXISTING BRIDGE REMOVAL.
3. DUE TO ANTICIPATED PHASING, THE OVERBUILD MATERIALS ARE NOT INCLUDED IN MATERIALS AVILABLE FOR FILLS.
4. THE MSE WALLS WILL BE VENDOR DESIGNED. THEREFORE FOOTING DEPTHS AND EXCAVATION NEEDS ARE UNKNOWN. HOWEVER, FOR THE PURPOSES OF THE EARTHWORK BALANCE AN ESTIMATED AMOUNT OF EXCAVATION HAS BEEN INCLUDED IN MATERIALS AVAILABLE FOR FILLS.
5. BASED ON THE BORINGS, SOLID ROCK EXCAVATION IS ASSUMED AT MSE WALL #1.

PROJECT NAME: MIDDLESEX
PROJECT NUMBER: IM 089-2(41)

FILE NAME: z07a052bdr_ews.dgn
PROJECT LEADER: R. HEBERT
DESIGNED BY: J. DAVIS
EARTHWORKS/DRAINAGE DETAIL SHEET

PLOT DATE: 1/3/2015
DRAWN BY: J. DAVIS
CHECKED BY: D. BURHANS
SHEET 10 OF 154

GENERAL INFORMATION

SYMBOLOGY LEGEND NOTE

THE SYMBOLOGY ON THIS SHEET IS INTENDED TO COVER STANDARD CONVENTIONAL SYMBOLOGY. THE SYMBOLOGY IS USED FOR EXISTING & PROPOSED FEATURES WITH HEAVIER LINEWEIGHT, IN COMBINATION WITH PROJECT ANNOTATION, AS NOTED ON PROJECT PLAN SHEETS. THIS LEGEND SHEET COVERS THE BASICS. SYMBOLOGY ON PLANS MAY VARY, PLAN ANNOTATIONS AND NOTES SHOULD BE USED TO CLARIFY AS NEEDED.

R.O.W. ABBREVIATIONS (CODES) & SYMBOLS

POINT	CODE	DESCRIPTION
	CH	CHANNEL EASEMENT
	CONST	CONSTRUCTION EASEMENT
	CUL	CULVERT EASEMENT
	D&C	DISCONNECT & CONNECT
	DIT	DITCH EASEMENT
	DR	DRAINAGE EASEMENT
	DRIVE	DRIVEWAY EASEMENT
	EC	EROSION CONTROL
	I&M	INSTALL & MAINTAIN EASEMENT
	LAND	LANDSCAPE EASEMENT
	R&RES	REMOVE & RESET
	R&REP	REMOVE & REPLACE
	SR	SLOPE RIGHT
	UE	UTILITY EASEMENT
	(P)	PERMANENT EASEMENT
	(T)	TEMPORARY EASEMENT
■	BNDNS	BOUND SET
⧈	BNDNS	BOUND TO BE SET
●	IPNS	IRON PIN SET
◎	IPNS	IRON PIN TO BE SET
⊠	CALC	EXISTING ROW POINT
○	PROW	PROPOSED ROW POINT
[LENGTH]		LENGTH CARRIED ON NEXT SHEET

COMMON TOPOGRAPHIC POINT SYMBOLS

POINT	CODE	DESCRIPTION
	APL	BOUND APPARENT LOCATION
	BM	BENCH MARK
	BND	BOUND
	CB	CATCH BASIN
	COMB	COMBINATION POLE
	DITHR	DROP INLET THROATED DNC
	EL	ELECTRIC POWER POLE
	FPOLE	FLAGPOLE
	GASFIL	GAS FILLER
	GP	GUIDE POST
	GSO	GAS SHUT OFF
	GUY	GUY POLE
	GUYW	GUY WIRE
	GV	GATE VALUE
	H	TREE HARDWOOD
	HCTRL	CONTROL HORIZONTAL
	HVCTRL	CONTROL HORIZ. & VERTICAL
	HYD	HYDRANT
	IP	IRON PIN
	IPIPE	IRON PIPE
	LI	LIGHT - STREET OR YARD
	MB	MAILBOX
	MH	MANHOLE (MH)
	MM	MILE MARKER
	PM	PARKING METER
	PMK	PROJECT MARKER
	POST	POST STONE/WOOD
	RRSIG	RAILROAD SIGNAL
	RRSL	RAILROAD SWITCH LEVER
	S	TREE SOFTWOOD
	SAT	SATELLITE DISH
	SHRUB	SHRUB
	SIGN	SIGN
	STUMP	STUMP
	TEL	TELEPHONE POLE
	TIE	TIE
	TSIGN	SIGN W/DOUBLE POST
	VCTRL	CONTROL VERTICAL
	WELL	WELL
	WSO	WATER SHUT OFF

THESE ARE COMMON VAOT SURVEY POINT SYMBOLS FOR EXISTING FEATURES, ALSO USED FOR PROPOSED FEATURES WITH HEAVIER LINEWEIGHT, IN COMBINATION WITH PROPOSED ANNOTATION.

PROPOSED GEOMETRY CODES

CODE	DESCRIPTION
PC	POINT OF CURVATURE
PI	POINT OF INTERSECTION
CC	CENTER OF CURVE
PT	POINT OF TANGENCY
PCC	POINT OF COMPOUND CURVE
PRC	POINT OF REVERSE CURVE
POB	POINT OF BEGINNING
POE	POINT OF ENDING
STA	STATION PREFIX
AH	AHEAD STATION SUFFIX
BK	BACK STATION SUFFIX
D	CURVE DEGREE OF (100FT)
R	CURVE RADUIS OF
T	CURVE TANGENT LENGTH
L	CURVE LENGTH OF
E	CURVE EXTERNAL DISTANCE

UTILITY SYMBOLOGY

UNDERGROUND UTILITIES

UT	TELEPHONE
UE	ELECTRIC
UC	CABLE (TV)
UEC	ELECTRIC+CABLE
UET	ELECTRIC+TELEPHONE
UCT	CABLE+TELEPHONE
UECT	ELECTRIC+CABLE+TELEP.
G	GAS LINE
W	WATER LINE
S	SANITARY SEWER (SEPTIC)

ABOVE GROUND UTILITIES (AERIAL)

T	TELEPHONE
E	ELECTRIC
C	CABLE (TV)
EC	ELECTRIC+CABLE
ET	ELECTRIC+TELEPHONE
AER E&T	ELECTRIC+TELEPHONE
CT	CABLE+TELEPHONE
ECT	ELECTRIC+CABLE+TELEP.
	UTILITY POLE GUY WIRE

PROJECT CONSTRUCTION SYMBOLOGY

PROJECT DESIGN & LAYOUT SYMBOLOGY

CZ	CLEAR ZONE
	PLAN LAYOUT MATCHLINE

PROJECT CONSTRUCTION FEATURES

	TOP OF CUT SLOPE
	TOE OF FILL SLOPE
	STONE FILL
	BOTTOM OF DITCH ℄
	CULVERT PROPOSED
	STRUCTURE SUBSURFACE
PDF	PROJECT DEMARCATION FENCE
BF	BARRIER FENCE
	TREE PROTECTION ZONE (TPZ)
	STRIPING LINE REMOVAL
	SHEET PILES

CONVENTIONAL BOUNDARY SYMBOLOGY

BOUNDARY LINES

TOWN LINE	TOWN BOUNDARY LINE
COUNTY LINE	COUNTY BOUNDARY LINE
STATE LINE	STATE BOUNDARY LINE
	PROPOSED STATE R.O.W. (LIMITED ACCESS)
	PROPOSED STATE R.O.W.
	STATE ROW (LIMITED ACCESS)
	STATE ROW
	TOWN ROW
	PERMANENT EASEMENT LINE (P)
	TEMPORARY EASEMENT LINE (T)
	SURVEY LINE
P L	PROPERTY LINE (P/L)
SR	SLOPE RIGHTS
6f	6F PROPERTY BOUNDARY
4f	4F PROPERTY BOUNDARY
HAZ	HAZARDOUS WASTE

EPSC LAYOUT PLAN SYMBOLOGY

EPSC MEASURES

	FILTER CURTAIN
	SILT FENCE
	SILT FENCE WOVEN WIRE
	CHECK DAM
	DISTURBED AREAS REQUIRING RE-VEGETATION
	EROSION MATTING

ENVIRONMENTAL RESOURCES

	WETLAND BOUNDARY
	RIPARIAN BUFFER ZONE
	WETLAND BUFFER ZONE
	SOIL TYPE BOUNDARY
T&E	THREATENED & ENDANGERED SPECIES
HAZ	HAZARDOUS WASTE AREA
AG	AGRICULTURAL LAND
HABITAT	FISH & WILDLIFE HABITAT
FLOOD PLAIN	FLOOD PLAIN
OHW	ORDINARY HIGH WATER (OHW)
	STORM WATER
	USDA FOREST SERVICE LANDS
	WILDLIFE HABITAT SUIT/CONN

ARCHEOLOGICAL & HISTORIC

ARCH	ARCHEOLOGICAL BOUNDARY
HISTORIC DIST	HISTORIC DISTRICT BOUNDARY
HISTORIC	HISTORIC AREA
H	HISTORIC STRUCTURE

CONVENTIONAL TOPOGRAPHIC SYMBOLOGY

EXISTING FEATURES

	ROAD EDGE PAVEMENT
	ROAD EDGE GRAVEL
	DRIVEWAY EDGE
	DITCH
	FOUNDATION
	FENCE (EXISTING)
	FENCE WOOD POST
	FENCE STEEL POST
	GARDEN
	ROAD GUARDRAIL
	RAILROAD TRACKS
	CULVERT (EXISTING)
	STONE WALL
	WALL
	WOOD LINE
	BRUSH LINE
	HEDGE
	BODY OF WATER EDGE
	LEDGE EXPOSED

PROJECT NAME: MIDDLESEX
PROJECT NUMBER: IM 089-2(41)

FILE NAME: z07a052bdrlegend.dgn
PROJECT LEADER: R. HEBERT
DESIGNED BY: J. OLUND
CONVENTIONAL SYMBOLOGY LEGEND

PLOT DATE: 1/3/2015
DRAWN BY: S. MORGAN
CHECKED BY: R. HEBERT
SHEET 11 OF 154

GPS CONTROL POINTS

HVCTRL #1

B 24

NORTH = 643273.20
EAST = 1608735.87
ELEV. = 525.77

GENERAL LOCATION - THE STATION IS LOCATED IN THE TOWN OF MIDDLESEX, 2.2 MI (3.5 KM) WEST OF THE CITY OF MONTPELIER, 3.4 MI (5.5 KM) SOUTHEAST OF MIDDLESEX VILLAGE, AND 7.7 MI (12.4 KM) NORTH NORTHEAST OF NORTHFIELD. TO REACH FROM THE JUNCTION OF U.S. ROUTE 2 AND VERMONT ROUTE 12 IN MONTPELIER (JUNCTION OF STATE AND MAIN STREET) PROCEED 2.7 MI (4.3 KM) WEST ON ROUTE 2 AND THE MARK ON THE LEFT. TO REACH FROM THE JUNCTION OF U.S. ROUTE 2 AND VERMONT ROUTE 100B IN MIDDLESEX, PROCEED 3.85 MI (6.20 KM) EAST ON ROUTE 2 AND THE MARK ON THE RIGHT. THE MARK IS A CGS BENCHMARK DISK SET IN A 6X6 INCH SQUARE CONCRETE MONUMENT, PROJECTING 6 INCHES ABOVE GROUND SURFACE. IT IS LOCATED 90 FT (27.4 M) SOUTHEAST OF A 20 INCH DIAMETER CAST-IRON CULVERT, 42 FT (12.8 M) SOUTHWEST OF THE CENTERLINE OF U.S. ROUTE 2, 31.8 FT (9.7 M) NORTHEAST OF THE CORNER OF A 6 FOOT (1.8 M) CHAINLINK FENCE, 12.6 FT (3.8 M) SOUTHWEST OF THE SOUTHWEST RAIL, 6.5 FT (2.0 M) NORTHEAST OF THE RAILROAD RIGHT-OF-WAY FENCE, AND 0.8 FT (24.4 CM) NORTHEAST OF A FIBERGLASS WITNESS POST. OWNERSHIP IS THE CENTRAL VERMONT RAILWAY.

HVCTRL #2

BASELINE WEST

NORTH = 642565.39
EAST = 1610049.92
ELEV. = 528.20

DESCRIBED BY VERMONT AGENCY OF TRANSPORTATION 1996 (DJM) GENERAL LOCATION, MONTPELIER, 2 MILES (3.2 KM) WEST OF TO REACH FROM THE INTERSECTION OF US ROUTE 2, STATE STREET, AND BAILEY AVENUE IN MONTPELIER GO WEST ALONG US ROUTE 2 FOR 1.9 MILES (3.1 KM) TO THE MARK ON THE NORTHEAST SIDE OF ROUTE 2. 0.25 MILE (0.40 KM) WEST ALONG US ROUTE 2 FROM ITS INTERSECTION WITH THE MONTPELIER-MIDDLESEX TOWN LINE. OPPOSITE DUBOIS CONSTRUCTION. OWNERSHIP STATE OF VERMONT STATION MARK IS A STATE OF VERMONT SURVEY MARK DISK SET IN THE TOP OF A 6-INCH BY 6-INCH CONCRETE MONUMENT FLUSH WITH GROUND SURFACE. IT IS 60.5 FEET (18.4 M) NORTHEAST OF THE CENTERLINE OF US ROUTE 2, 119 FEET (36.3 M) NORTH NORTHWEST OF A CLUMP APPLE, 50.5 FEET (15.4 M) SOUTHEAST OF A BRACE POST IN THE 189 R.O.W.FENCE, 106 FEET (32.3 M) NORTHWEST OF A 4-INCH WHITE BIRCH IN 189 R.O.W.FENCE, 1.8 FEET (0.5 M) SOUTHWEST OF A CARSONITE WITNESS POST IN 189 R.O.W.FENCE.

TRAVERSE TIES

HVCTRL #7

NORTH = 647539.14
EAST = 1602575.92
ELEV. = 522.16

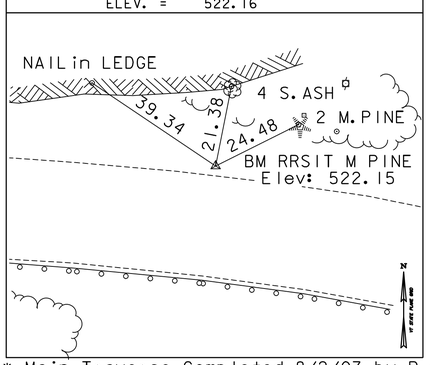

HVCTRL #8

NORTH = 647343.04
EAST = 1601767.23
ELEV. = 547.26

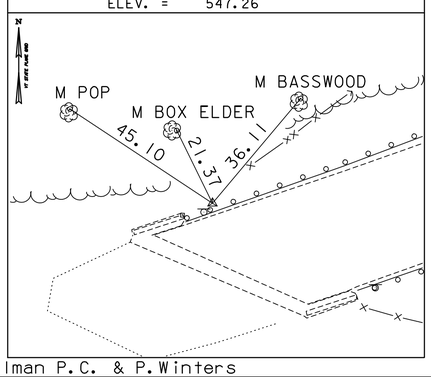

HVCTRL #9

NORTH = 647291.64
EAST = 1601115.02
ELEV. = 534.13

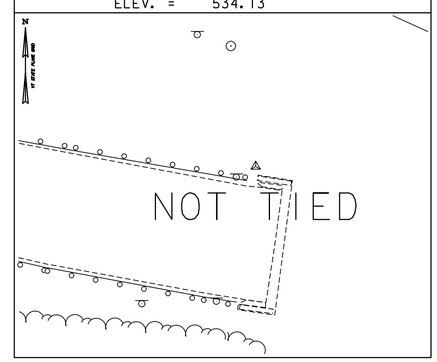

HVCTRL #10

NORTH = 647784.19
EAST = 1599701.26
ELEV. = 508.18

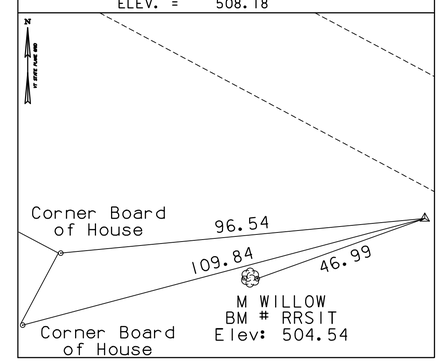

HVCTRL

NORTH =
EAST =
ELEV. =

* Main Traverse Completed 8/2/07 by R.Gilman P.C. & P.Winters

ALIGNMENT TIES

POB 0+00.00

NORTH = 647662.62
EAST = 1600018.20
ELEV. =

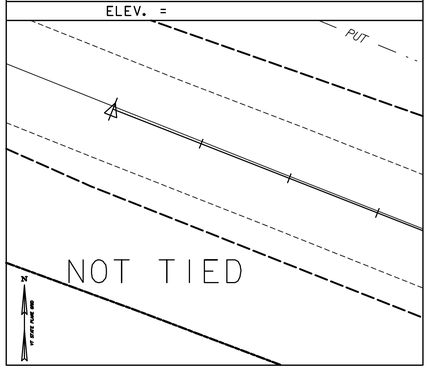

PC 10+72.25

NORTH = 647271.13
EAST = 1601016.43
ELEV. =

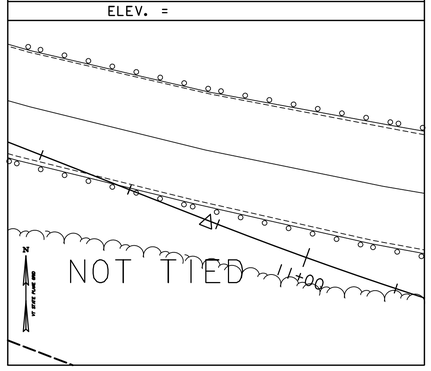

PT 18+74.11

NORTH = 647292.34
EAST = 1601796.69
ELEV. =

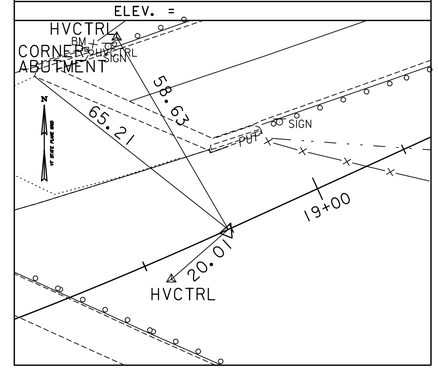

PC 22+76.09

NORTH = 647459.23
EAST = 1602162.39
ELEV. =

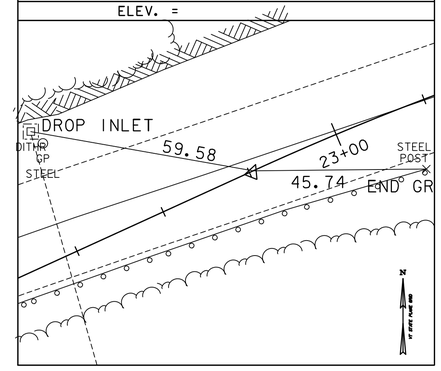

PT 29+13.00

NORTH = 647471.51
EAST = 1602781.63
ELEV. =

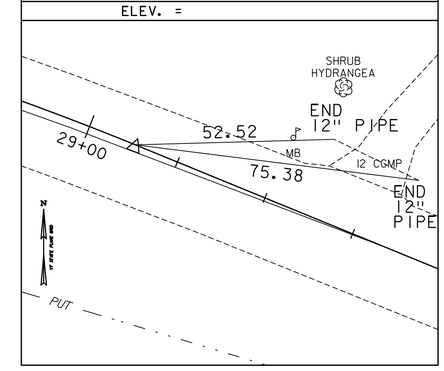

DATUM	
VERTICAL	NAVD 88
HORIZONTAL	NAD 83(96)
ADJUSTMENT	Compass

PROJECT NAME: MIDDLESEX
PROJECT NUMBER: IM 089-2(41)

FILE NAME: z07a052t1.dgn
PROJECT LEADER: R. HEBERT
DESIGNED BY: D. BRYANT
TIE SHEET

PLOT DATE: 1/3/2015
DRAWN BY: R. BULLOCK
CHECKED BY: D. BURHANS
SHEET 12 OF 154

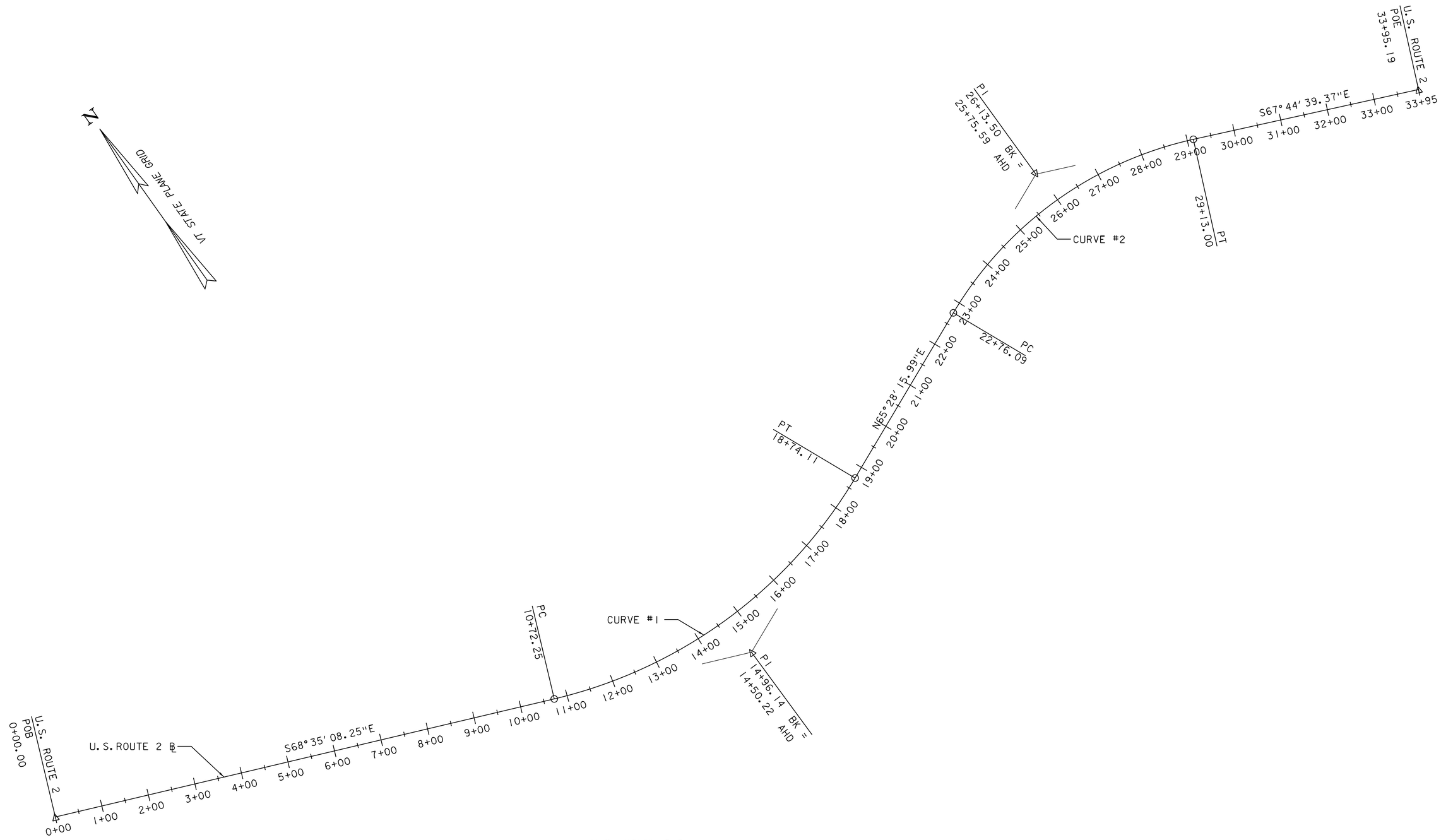

U.S. ROUTE 2 ℄

CURVE #1	CURVE #2
DELTA = 45° 56′ 36″	DELTA = 46° 47′ 05″
D = 5° 43′ 46″	D = 7° 20′ 44″
R = 1000.00′	R = 780.00′
T = 423.89′	T = 337.41′
L = 801.86′	L = 636.91′
E = 86.13′	E = 69.85′
BANKING = 7.60%	BANKING = 8.00%

0 100 200
SCALE IN FEET

PROJECT NAME: MIDDLESEX	
PROJECT NUMBER: IM 089-2(41)	
FILE NAME: z07a052bdr_alg.dgn	PLOT DATE: 1/3/2015
PROJECT LEADER: R. HEBERT	DRAWN BY: P. MCCLURE
DESIGNED BY: D. BURHANS	CHECKED BY: D. BRYANT
ALIGNMENT SHEET	SHEET 13 OF 154

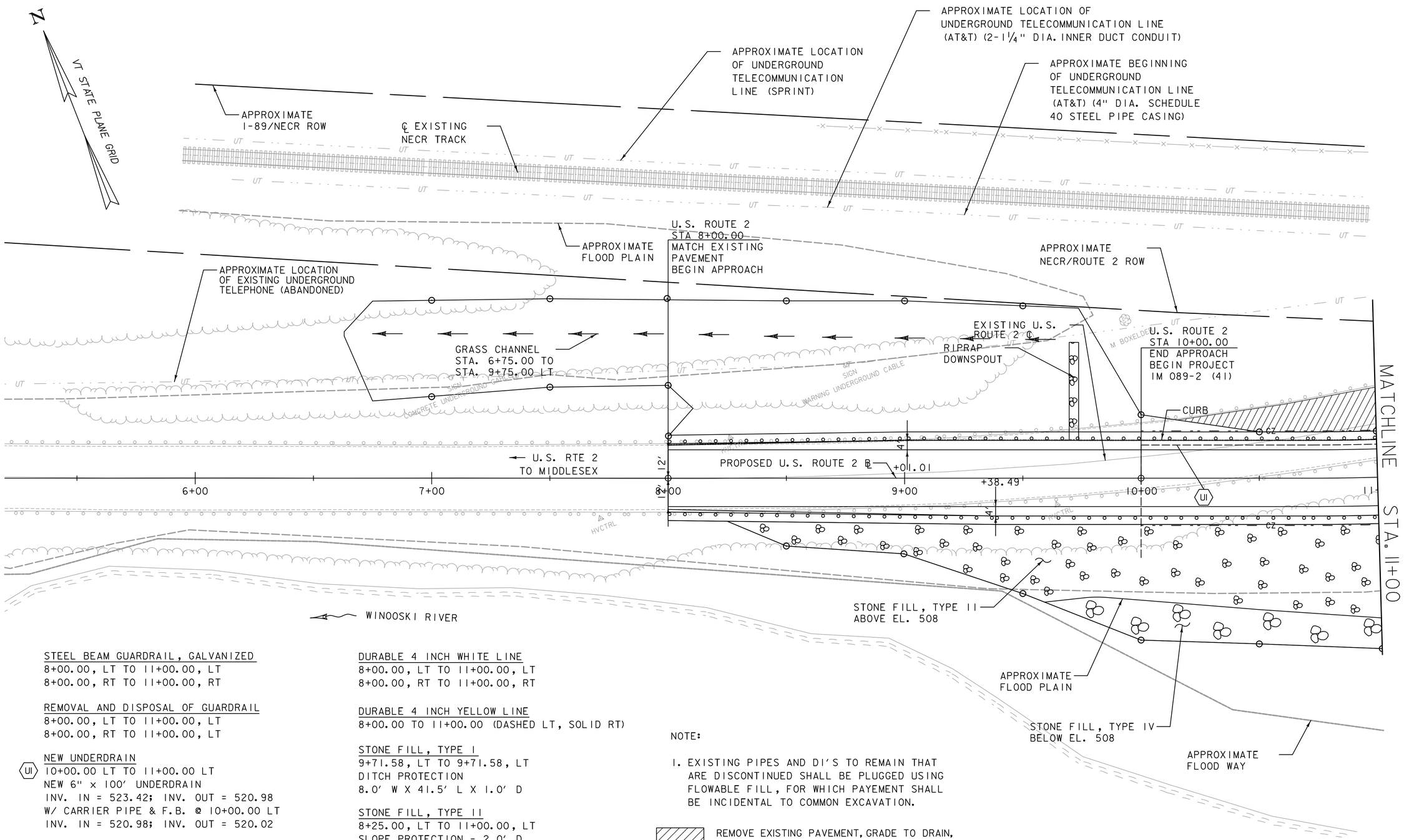

STEEL BEAM GUARDRAIL, GALVANIZED
8+00.00, LT TO 11+00.00, LT
8+00.00, RT TO 11+00.00, RT

REMOVAL AND DISPOSAL OF GUARDRAIL
8+00.00, LT TO 11+00.00, LT
8+00.00, RT TO 11+00.00, LT

NEW UNDERDRAIN
UI 10+00.00 LT TO 11+00.00 LT
NEW 6" x 100' UNDERDRAIN
INV. IN = 523.42; INV. OUT = 520.98
W/ CARRIER PIPE & F.B. @ 10+00.00 LT
INV. IN = 520.98; INV. OUT = 520.02

CAST-IN-PLACE CONCRETE CURB, TYPE B
8+00.00, LT TO 9+69.58, LT
9+73.58, RT TO 11+00.00, RT

DURABLE 4 INCH WHITE LINE
8+00.00, LT TO 11+00.00, LT
8+00.00, RT TO 11+00.00, RT

DURABLE 4 INCH YELLOW LINE
8+00.00 TO 11+00.00 (DASHED LT, SOLID RT)

STONE FILL, TYPE I
9+71.58, LT TO 9+71.58, LT
DITCH PROTECTION
8.0' W X 41.5' L X 1.0' D

STONE FILL, TYPE II
8+25.00, LT TO 11+00.00, LT
SLOPE PROTECTION - 2.0' D

STONE FILL, TYPE IV
9+59.22, LT TO 11+00.00, LT
SLOPE PROTECTION - 4.0' D

NOTE:

1. EXISTING PIPES AND DI'S TO REMAIN THAT ARE DISCONTINUED SHALL BE PLUGGED USING FLOWABLE FILL, FOR WHICH PAYEMENT SHALL BE INCIDENTAL TO COMMON EXCAVATION.

REMOVE EXISTING PAVEMENT, GRADE TO DRAIN, 4" TOPSOIL, SEED AND MULCH.

SCALE 1" = 20'-0"
20 0 20

PROJECT NAME: MIDDLESEX	
PROJECT NUMBER: IM 089-2(41)	
FILE NAME: z07a052bdr_pl01.dgn	PLOT DATE: 1/3/2015
PROJECT LEADER: R. HEBERT	DRAWN BY: P. MCCLURE
DESIGNED BY: D. BURHANS	CHECKED BY: D. BRYANT
LAYOUT SHEET - 1	SHEET 14 OF 154

SNOW BARRIER
13+82.69, LT TO 16+50.00, LT
13+84.04, RT TO 16+50.00, RT

BRIDGE RAILING, GALVANIZED 2 RAIL BOX BEAM
13+84.13, LT TO 16+50.00, LT
13+84.20, RT TO 16+50.00, RT

GUARDRAIL APPROACH SECTION, GALVANIZED 2 RAIL BOX BEAM
13+54.52, LT TO 13+84.13, LT
13+55.63, RT TO 13+84.20, RT

STEEL BEAM GUARDRAIL, GALVANIZED
11+00.00, LT TO 13+54.52, LT
11+00.00, RT TO 13+55.63, RT

REMOVAL AND DISPOSAL OF GUARDRAIL
11+00.00, LT TO 11+60.00, LT
11+00.00, LT TO 11+66.52, LT

CAST-IN-PLACE CONCRETE CURB, TYPE B
11+00.00, LT TO 12+41.90, LT
12+49.91, LT TO 13+51.27, LT

STONE FILL, TYPE I
12+46.14, LT TO 12+72.52, LT
DITCH PROTECTION
8.0' W X 94.9' L X 1.0' D

12+60.87, LT TO 12+95.43, LT
OUTLET PROTECTION - 1.0' D

15+61.01, CL TO 15+84.95, CL
SLOPE PROTECTION - 1.0' D

STONE FILL, TYPE II
13+82.66, LT TO 14+06.32, RT
DITCH PROTECTION
8.0' W X 72.5' L X 2.0' D

11+00.00, LT TO 14+06.32, CL
SLOPE PROTECTION - 2.0' D

STONE FILL, TYPE IV
11+00.00, RT TO 14+05.07, RT
SLOPE PROTECTION - 4.0' D

12+58.83, RT TO 12+83.86, RT
INLET PROTECTION
15.0' TO 29.0' W X 19.8' L X 1.0' D - 4.0' D

12+83.86, RT TO 14+06.32, RT
DITCH PROTECTION
8.0' W X 186.4' L X 4.0' D

12+85.09, RT TO 14+17.51, RT
SLOPE PROTECTION - 4.0' D

NEW DRAINAGE
(I) 12+75.76 LT TO 12+72.41 RT
NEW 60" x 131.50' RCP PIPE
INV. IN = 508.00 INV. OUT 501.39

(5) 12+75.76 LT TO 12+72.41 RT
NEW 24" x 48.00' RCP PIPE
INV. IN = 531.15 INV. OUT 530.67

NEW UNDERDRAIN
(U1) 11+00.00 LT TO 11+50.00 LT
NEW 6" x 50' UNDERDRAIN
INV. IN = 528.10; INV. OUT = 525.78

(U2) 15+80.12 RT TO 16+31.69 RT
NEW 6" x 64.0' UNDERDRAIN CARRIER PIPE (CONNECT TO PIER FOOTING UNDERDRAIN - SEE BRIDGE PLANS)
INV. IN = 510.02; INV. OUT = 509.06

(U3) 15+65.66 LT TO 15+65.85 RT
NEW 6" UNDERDRAIN
INV. IN = 510.51; INV. OUT = 510.30

(U4) 15+65.85 RT TO 15+80.15 RT
NEW 6" UNDERDRAIN
INV. IN = 510.30; INV. OUT = 510.02

(U5) 15+80.35 LT TO 15+80.12 RT
NEW 6" UNDERDRAIN
INV. IN = 510.51; INV. OUT = 510.02

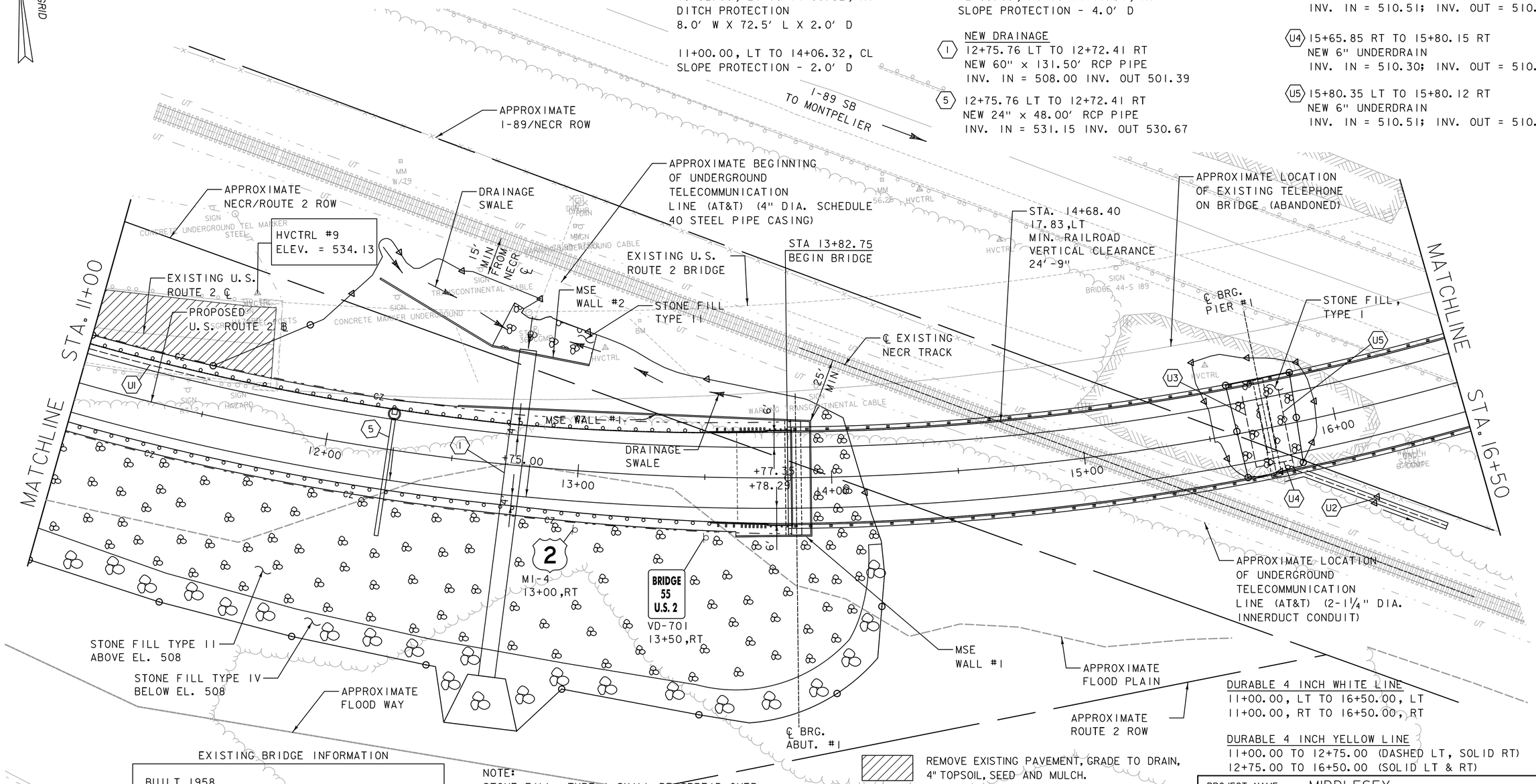

DURABLE 4 INCH WHITE LINE
11+00.00, LT TO 16+50.00, LT
11+00.00, RT TO 16+50.00, RT

DURABLE 4 INCH YELLOW LINE
11+00.00 TO 12+75.00 (DASHED LT, SOLID RT)
12+75.00 TO 16+50.00 (SOLID LT & RT)

EXISTING BRIDGE INFORMATION

BUILT 1958
NON-CONTINUOUS, STEEL BEAM, CONCRETE DECK
9 SPANS @ 76.85', 75.11', 59.16', 86.40', 72.21', 56.16',80.22', 78.80' AND 75.06'
30'-0" ROADWAY (CURB TO CURB)
STEEL BRIDGE RAILING

NOTE:
STONE FILL, TYPE I SHALL BE SPREAD OVER THE FINISHED STONE FILL TYPE IV DITCH TO FILL THE SURFACE VOIDS IN THE STONE FILL, TYPE IV. PAYMENT WILL BE INCIDENTAL TO ITEM 613.13 STONE FILL, TYPE IV.

REMOVE EXISTING PAVEMENT, GRADE TO DRAIN, 4" TOPSOIL, SEED AND MULCH.

SCALE 1" = 20'-0"
20 0 20

PROJECT NAME: MIDDLESEX	
PROJECT NUMBER: IM 089-2(41)	
FILE NAME: z07a052bdr_pl02.dgn	PLOT DATE: 1/3/2015
PROJECT LEADER: R. HEBERT	DRAWN BY: P. MCCLURE
DESIGNED BY: D. BURHANS	CHECKED BY: D. BRYANT
LAYOUT SHEET - 2	SHEET 15 OF 154

STONE FILL, TYPE I
18+57.27, CL TO 18+94.00, CL
SLOPE PROTECTION - 1.0' D

19+44.78, LT TO 19+44.78, LT
DITCH PROTECTION
8' W X 34.5' L X 1' D

20+25.00, LT TO 22+00.00, LT
DITCH PROTECTION
8' W X 178.5' L X 1' D

STONE FILL, TYPE II
19+51.01, RT TO 20+41.85, RT
SLOPE PROTECTION - 2.0' D

NOTE 1:
STA. 21+00.00 TO STA. 22+00.00
32' WIDE JURISDICTIONAL STORMWATER CREDIT AREA - DESIGN SHALL NOT BE MODIFIED WITHOUT APPROVAL OF PERMITTING AGENCIES

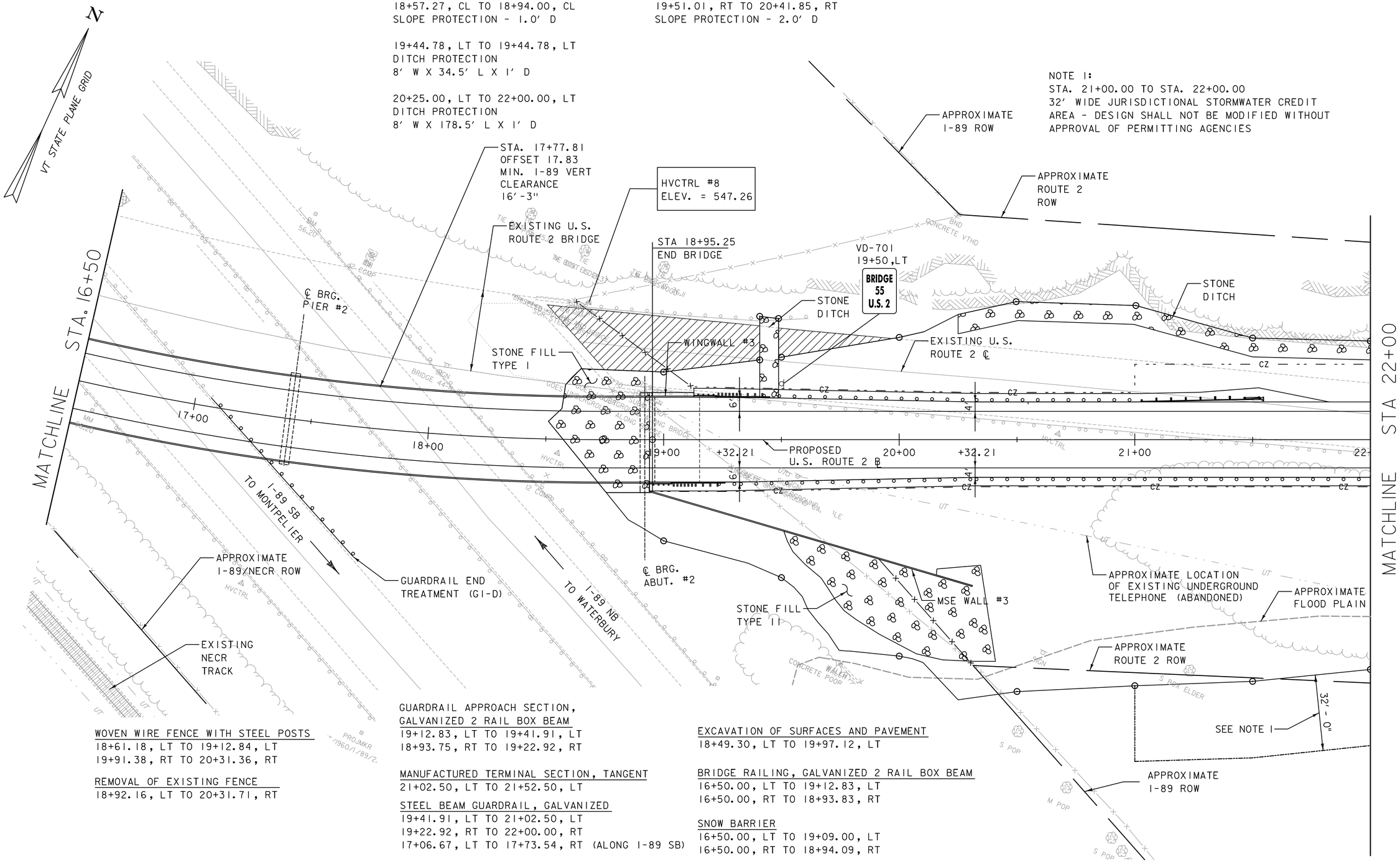

WOVEN WIRE FENCE WITH STEEL POSTS
18+61.18, LT TO 19+12.84, LT
19+91.38, RT TO 20+31.36, RT

REMOVAL OF EXISTING FENCE
18+92.16, LT TO 20+31.71, RT

GUARDRAIL APPROACH SECTION, GALVANIZED 2 RAIL BOX BEAM
19+12.83, LT TO 19+41.91, LT
18+93.75, RT TO 19+22.92, RT

MANUFACTURED TERMINAL SECTION, TANGENT
21+02.50, LT TO 21+52.50, LT

STEEL BEAM GUARDRAIL, GALVANIZED
19+41.91, LT TO 21+02.50, LT
19+22.92, RT TO 22+00.00, RT
17+06.67, LT TO 17+73.54, RT (ALONG I-89 SB)

REMOVAL AND DISPOSAL OF GUARDRAIL
18+59.02, LT TO 19+61.42, LT
18+93.67, LT TO 22+00.00, RT

CAST IN PLACE CONCRETE CURB, TYPE B
19+09.00, LT TO 19+49.00, LT
18+93.75, RT TO 19+34.00, RT

EXCAVATION OF SURFACES AND PAVEMENT
18+49.30, LT TO 19+97.12, LT

BRIDGE RAILING, GALVANIZED 2 RAIL BOX BEAM
16+50.00, LT TO 19+12.83, LT
16+50.00, RT TO 18+93.83, RT

SNOW BARRIER
16+50.00, LT TO 19+09.00, LT
16+50.00, RT TO 18+94.09, RT

DURABLE 4 INCH WHITE LINE
16+50.00, LT TO 22+00.00, LT
16+50.00, RT TO 22+00.00, RT

DURABLE 4 INCH YELLOW LINE
16+50.00 TO 22+00.00 (SOLID LT, SOLID RT)

SCALE 1" = 20'-0"
20 0 20

REMOVE EXISTING PAVEMENT, GRADE TO DRAIN, 4" TOPSOIL, SEED AND MULCH.

PROJECT NAME:	MIDDLESEX
PROJECT NUMBER:	IM 089-2(41)

FILE NAME: z07a052bdr_pl03.dgn	PLOT DATE: 1/3/2015
PROJECT LEADER: R. HEBERT	DRAWN BY: P. MCCLURE
DESIGNED BY: D. BURHANS	CHECKED BY: D. BRYANT
LAYOUT SHEET - 3	SHEET 16 OF 154

STONE FILL, TYPE I
22+00.00 RT TO 27+50.00 LT
DITCH PROTECTION
8.0' W X 566.2' L X 1.0' D

22+00.52 RT TO 22+12.39 RT
OUTLET PROTECTION
6.0' TO 12.0' W X 8.0' L X 1.0' D

26+26.94, RT TO 26+48.61, RT
OUTLET PROTECTION
10.5' TO 20.0' W X 14.0' L X 1.0' D

NEW DRAINAGE
(2) 22+16.89 LT TO 22+06.99 RT
NEW 24" x 149.00' OPTION AA PIPE
INV. IN = 529.00 INV. OUT 502.03

(3) 26+22.70 LT TO 26+35.31 RT
NEW 42" x 82.50' OPTION CC PIPE
INV. IN = 517.50 INV. OUT 507.49

(4) 26+41.45 RT TO 27+47.59 LT
NEW 30" x 138.00' OPTION BB PIPE
INV. IN = 517.63 INV. OUT 507.49

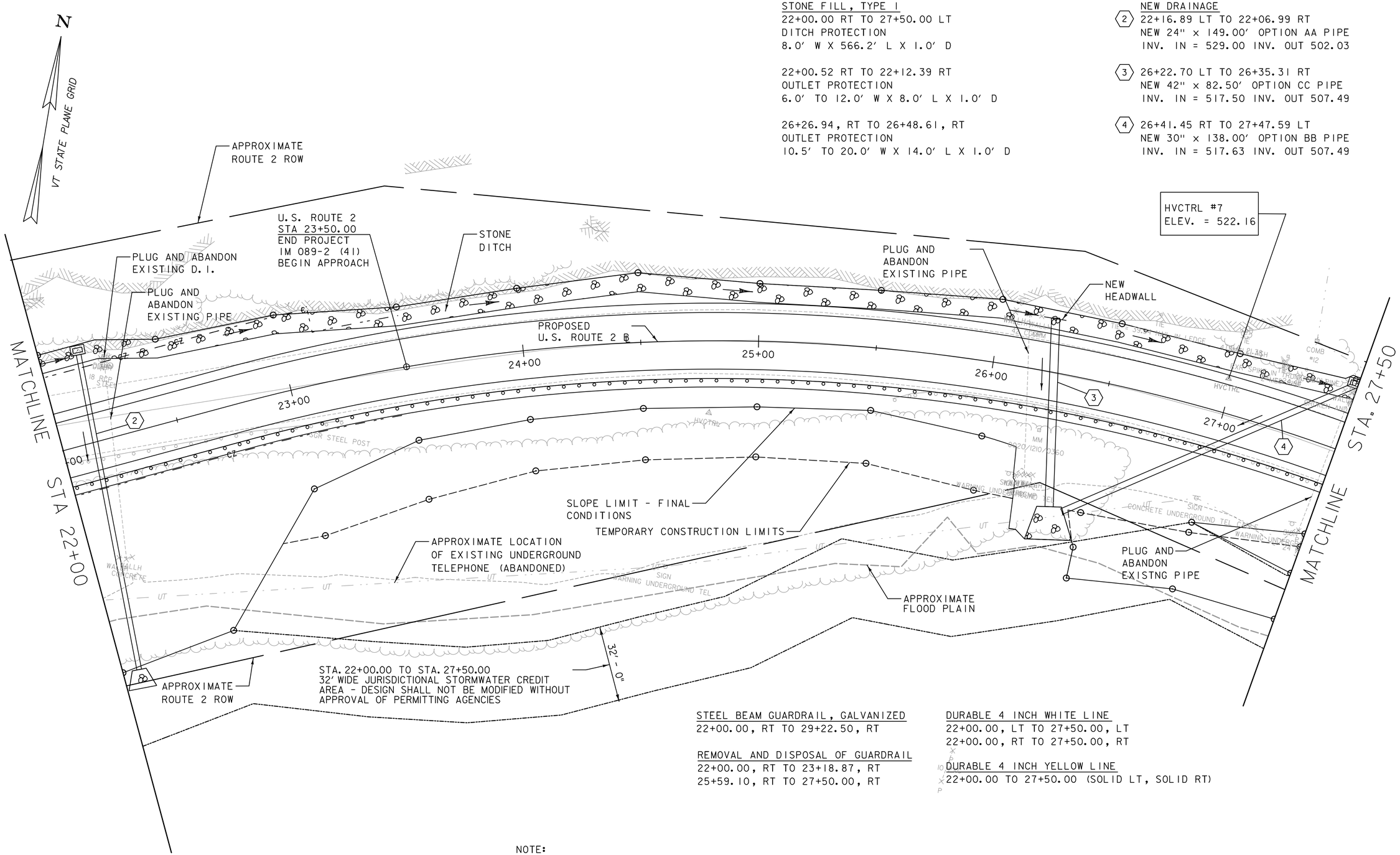

STEEL BEAM GUARDRAIL, GALVANIZED
22+00.00, RT TO 29+22.50, RT

REMOVAL AND DISPOSAL OF GUARDRAIL
22+00.00, RT TO 23+18.87, RT
25+59.10, RT TO 27+50.00, RT

DURABLE 4 INCH WHITE LINE
22+00.00, LT TO 27+50.00, LT
22+00.00, RT TO 27+50.00, RT

DURABLE 4 INCH YELLOW LINE
22+00.00 TO 27+50.00 (SOLID LT, SOLID RT)

NOTE:
1. CONTRACTOR SHALL INSTALL PIPE (2) AND PIPE (4) DURING DRY CONDITIONS. CONTRACTOR SHALL MAINTAIN FLOW THROUGH EXISTING 18", 24" AND 42" PIPES DURING INSTALLATION OF PIPES (2), (3) AND (4).

SCALE 1" = 20'-0"
20 0 20

PROJECT NAME: MIDDLESEX	
PROJECT NUMBER: IM 089-2(41)	
FILE NAME: z07a052bdr_pl04.dgn	PLOT DATE: 1/3/2015
PROJECT LEADER: R. HEBERT	DRAWN BY: P. MCCLURE
DESIGNED BY: D. BURHANS	CHECKED BY: D. BRYANT
LAYOUT SHEET - 4	SHEET 17 OF 154

MANUFACTURED TERMINAL SECTION, TANGENT
29+22.50, RT TO 29+72.50, RT

STEEL BEAM GUARDRAIL, GALVANIZED
27+50.00, RT TO 29+22.50, RT

REMOVAL AND DISPOSAL OF GUARDRAIL
27+50.00, RT TO 28+67.00, RT

CONSTRUCT DRIVE
27+84.99, LT 47' PAVED

RELOCATE MAILBOX, SINGLE SUPPORT
28+11.00, LT

DURABLE 4 INCH WHITE LINE
27+50.00 TO 29.50.00

DURABLE 4 INCH YELLOW LINE
27+50.00 TO 29+50.00 (SOLID LT, SOLID RT)

STONE FILL. TYPE I
27+50.00 LT TO 27+63 LT
DITCH PROTECTION
8.0' W X 11.2' L X 1.0' D

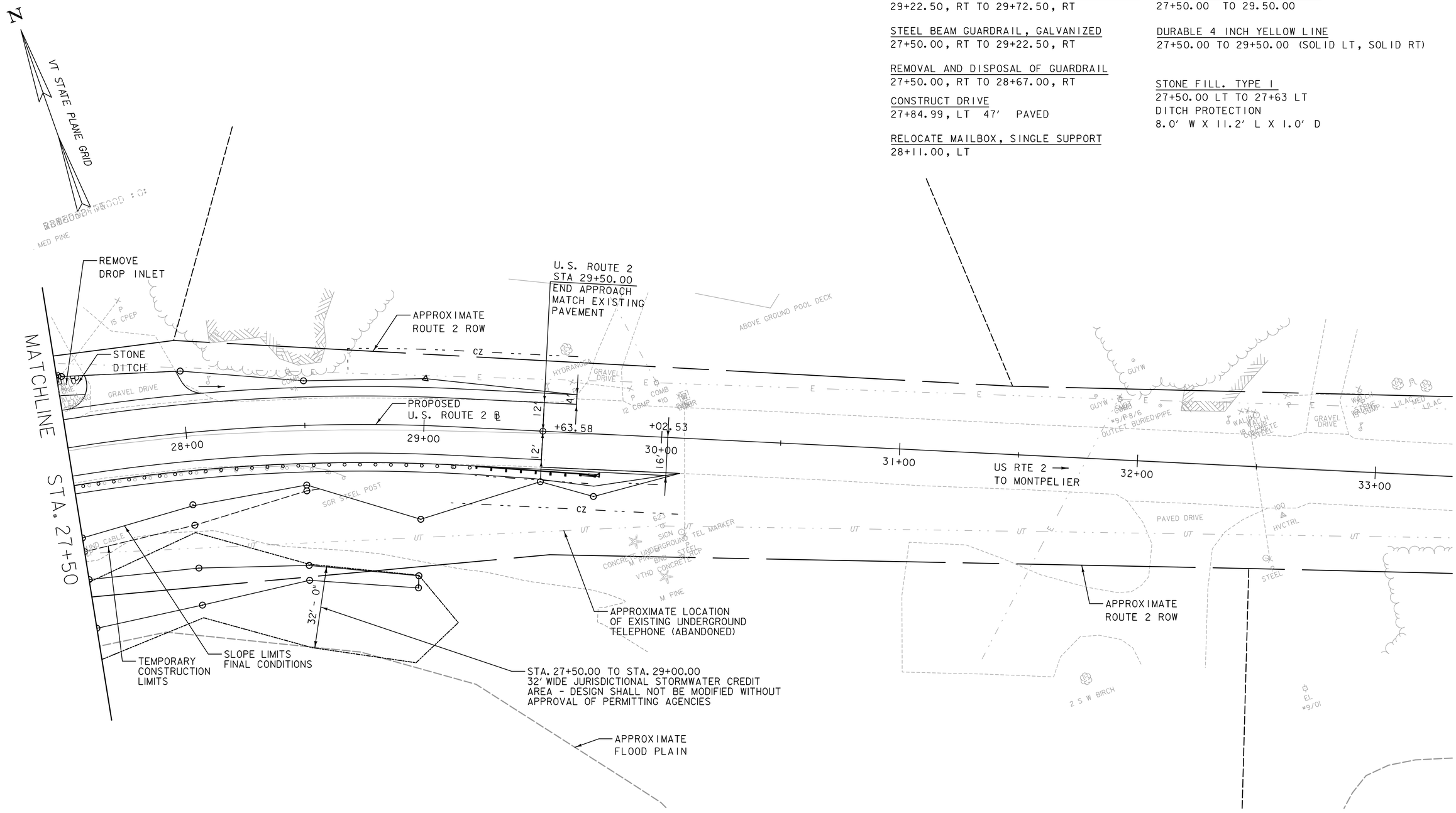

SCALE 1" = 20'-0"
20 0 20

PROJECT NAME: MIDDLESEX	
PROJECT NUMBER: IM 089-2(41)	
FILE NAME: z07a052bdr_pl05.dgn	PLOT DATE: 1/3/2015
PROJECT LEADER: R. HEBERT	DRAWN BY: P. MCCLURE
DESIGNED BY: D. BURHANS	CHECKED BY: D. BRYANT
LAYOUT SHEET - 5	SHEET 18 OF 154

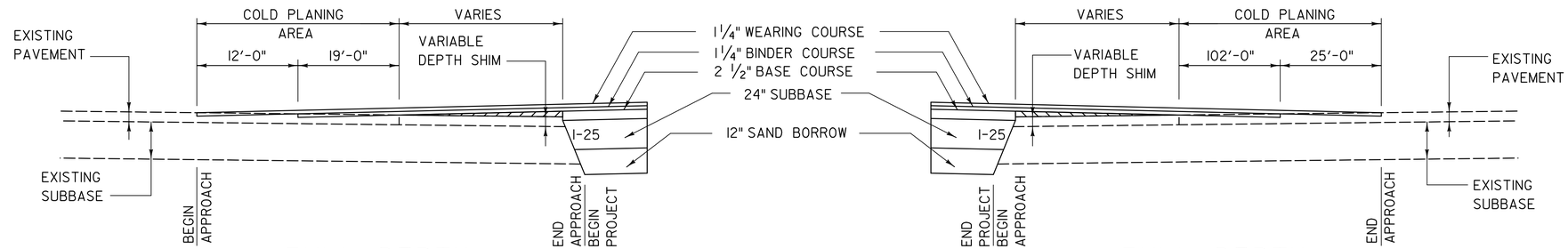

FULL DEPTH
TRANSITION DETAIL
STA. 8+00 TO STA. 10+00
N.T.S.

FULL DEPTH
TRANSITION DETAIL
STA. 23+50 TO STA. 29+50
N.T.S.

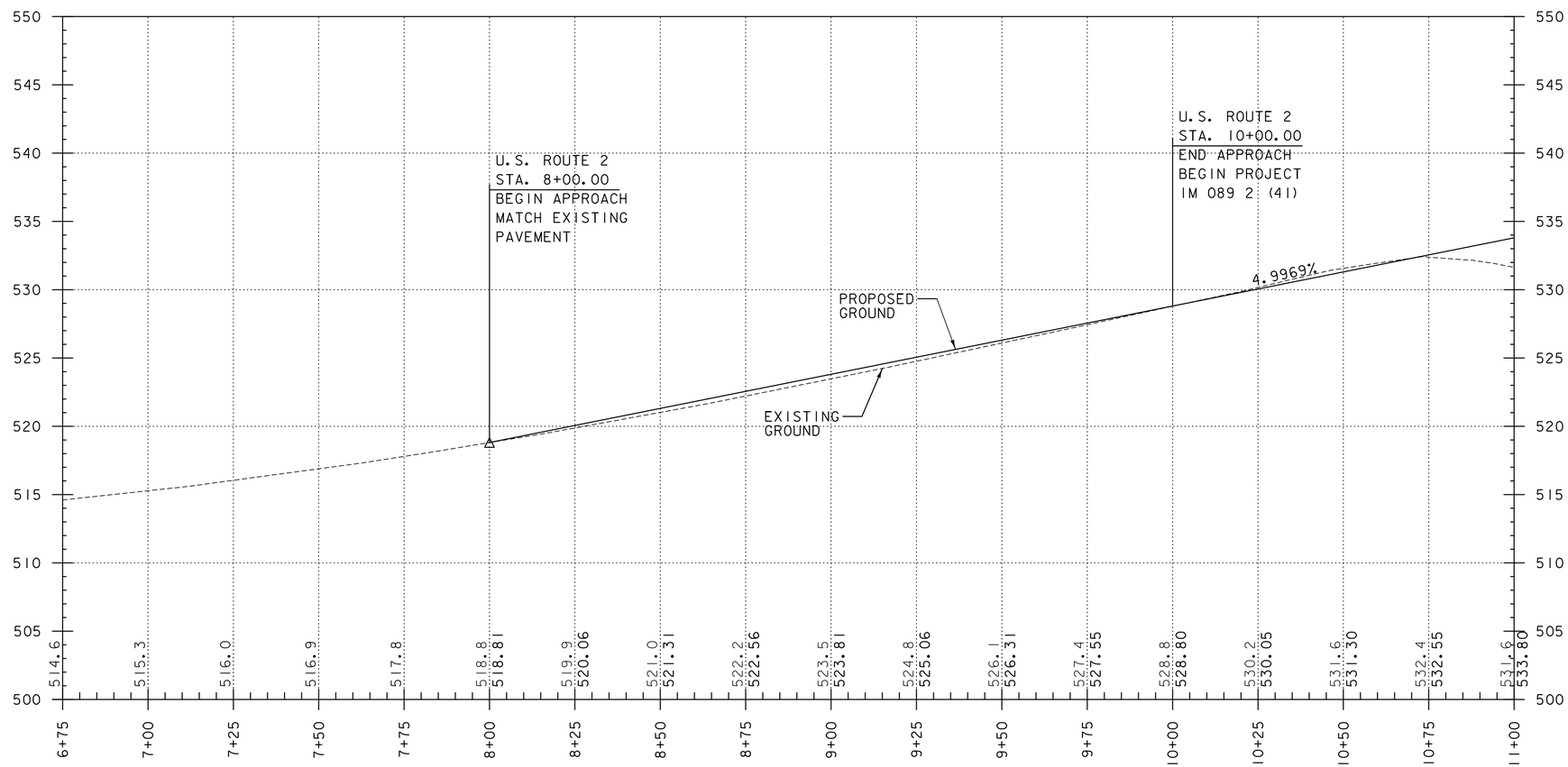

PROFILE - U.S. ROUTE 2

THE GRADES SHOWN TO THE NEAREST TENTH ARE THE ORIGINAL GROUND ELEVATIONS ALONG THE PROPOSED ALIGNMENT

THE GRADES SHOWN TO THE NEAREST HUNDRETH ARE THE PROPOSED GRADES FOR THE NEW ALIGNMENT

SCALES:
HORIZ: 1" = 20'
VERT: 1" = 5'

0 20 40
0 5 10

PROJECT NAME: MIDDLESEX	
PROJECT NUMBER: IM 089-2(41)	
FILE NAME: z07a052bdr_pr01.dgn	PLOT DATE: 1/3/2015
PROJECT LEADER: R. HEBERT	DRAWN BY: P. MCCLURE
DESIGNED BY: D. BURHANS	CHECKED BY: D. BRYANT
PROFILE SHEET - 1	SHEET 19 OF 154

STA. 13+82.75
BEGIN BRIDGE
FG = 547.24

APPROACH SLAB NO. 1

PROPOSED GRADE

SUPERSTRUCTURE

4.9969%

PVC 12+70.00
ELEV 542.29

ABUTMENT NO. 1

MSE WALL NO. 1

24'-9" MIN.
RR VERTICAL CLEARANCE

PIER NO. 1

EL. VARIES

STONE FILL, TYPE II

STONE FILL, TYPE I
(PROPOSED GROUND)

L =900.00 FT
K =92
SSD =445 FT

EXISTING GROUND

Station	Elevation
11+00	531.6 533.80
11+25	530.9 535.05
11+50	529.6 536.30
11+75	527.7 537.55
12+00	517.5 538.80
12+25	509.0 540.05
12+50	506.2 541.30
12+75	503.6 542.54
13+00	505.1 543.75
13+25	505.6 544.88
13+50	506.7 545.94
13+75	509.4 546.94
14+00	513.2 547.87
14+25	514.0 548.73
14+50	512.8 549.53
14+75	513.6 550.25
15+00	515.7 550.91
15+25	514.4 551.50
15+50	536.2 552.02
15+75	535.3 552.47
16+00	530.6 552.86
16+25	522.5 553.17
16+50	525.7 553.42

PROFILE - U.S. ROUTE 2

THE GRADES SHOWN TO THE NEAREST TENTH ARE THE ORIGINAL GROUND ELEVATIONS ALONG THE PROPOSED ALIGNMENT

THE GRADES SHOWN TO THE NEAREST HUNDRETH ARE THE PROPOSED GRADES FOR THE NEW ALIGNMENT

SCALES:
HORIZ: 1"= 20'
VERT: 1"= 5'

PROJECT NAME:	MIDDLESEX
PROJECT NUMBER:	IM 089-2(41)

FILE NAME: z07a052bdr_pr02.dgn	PLOT DATE: 1/3/2015
PROJECT LEADER: R. HEBERT	DRAWN BY: P. MCCLURE
DESIGNED BY: D. BURHANS	CHECKED BY: D. BRYANT
PROFILE SHEET - 2	SHEET 20 OF 154

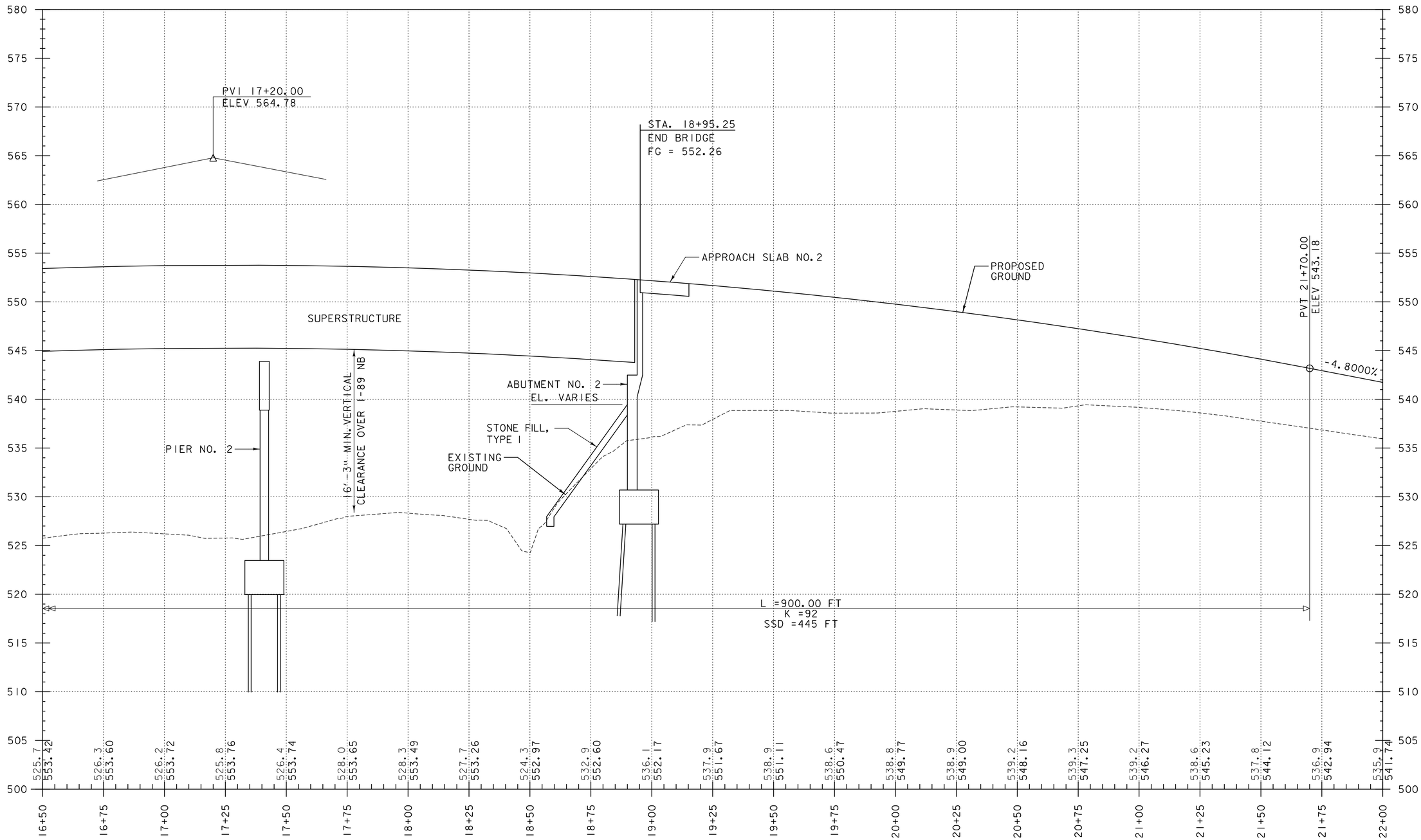

THE GRADES SHOWN TO THE NEAREST TENTH ARE THE ORIGINAL GROUND ELEVATIONS ALONG THE PROPOSED ALIGNMENT

THE GRADES SHOWN TO THE NEAREST HUNDRETH ARE THE PROPOSED GRADES FOR THE NEW ALIGNMENT

PROFILE - U.S. ROUTE 2

SCALES:
HORIZ: 1"= 20'
VERT: 1"= 5'

10 5 0
0 20 40

PROJECT NAME: MIDDLESEX	
PROJECT NUMBER: IM 089-2(41)	
FILE NAME: z07a052bdr_pr03.dgn	PLOT DATE: 1/3/2015
PROJECT LEADER: R. HEBERT	DRAWN BY: P. MCCLURE
DESIGNED BY: D. BURHANS	CHECKED BY: D. BRYANT
PROFILE SHEET - 3	SHEET 21 OF 154

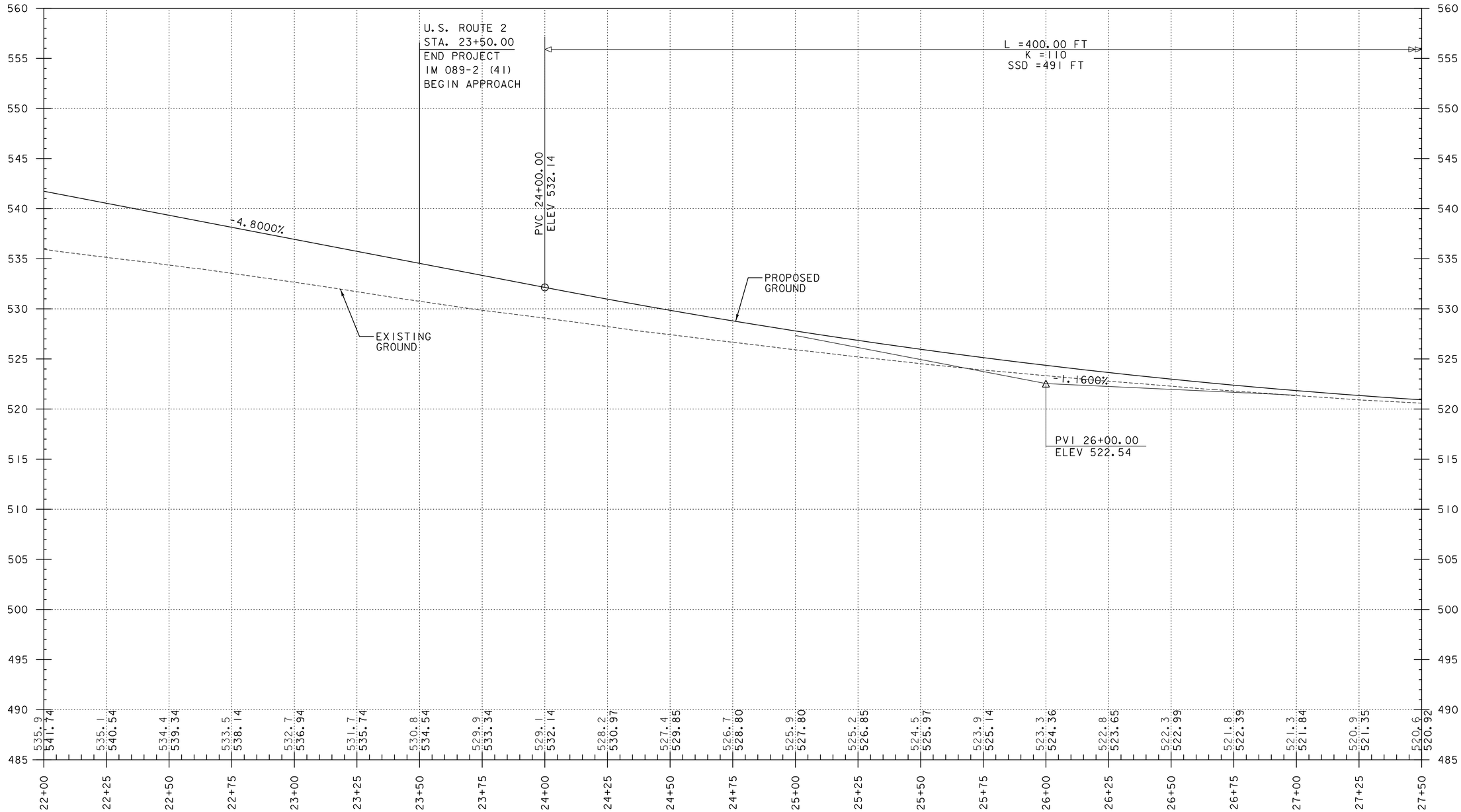

THE GRADES SHOWN TO THE NEAREST TENTH ARE THE ORIGINAL GROUND ELEVATIONS ALONG THE PROPOSED ALIGNMENT

THE GRADES SHOWN TO THE NEAREST HUNDRETH ARE THE PROPOSED GRADES FOR THE NEW ALIGNMENT

PROFILE - U.S. ROUTE 2

SCALES:
HORIZ: 1"= 20'
VERT: 1"= 5'

0 20 40
0 5 10

PROJECT NAME: MIDDLESEX	
PROJECT NUMBER: IM 089-2(41)	
FILE NAME: z07a052bdr_pr04.dgn	PLOT DATE: 1/3/2015
PROJECT LEADER: R. HEBERT	DRAWN BY: P. MCCLURE
DESIGNED BY: D. BURHANS	CHECKED BY: D. BRYANT
PROFILE SHEET - 4	SHEET 22 OF 154

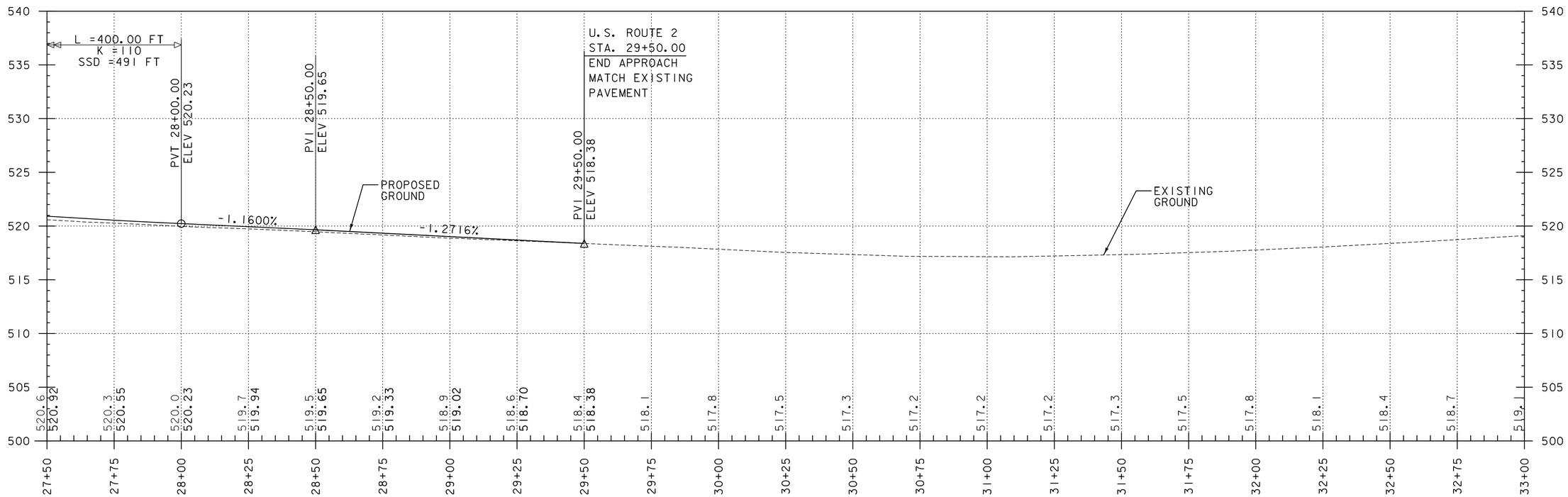

PROFILE - U.S. ROUTE 2

THE GRADES SHOWN TO THE NEAREST TENTH ARE THE ORIGINAL GROUND ELEVATIONS ALONG THE PROPOSED ALIGNMENT

THE GRADES SHOWN TO THE NEAREST HUNDRETH ARE THE PROPOSED GRADES FOR THE NEW ALIGNMENT

SCALES:
HORIZ: 1"= 20'
VERT: 1"= 5'

0 20 40
0 5 10

PROJECT NAME: MIDDLESEX	
PROJECT NUMBER: IM 089-2(41)	
FILE NAME: z07a052bdr_pr05.dgn	PLOT DATE: 1/3/2015
PROJECT LEADER: R. HEBERT	DRAWN BY: P. MCCLURE
DESIGNED BY: D. BURHANS	CHECKED BY: D. BRYANT
PROFILE SHEET - 5	SHEET 23 OF 154

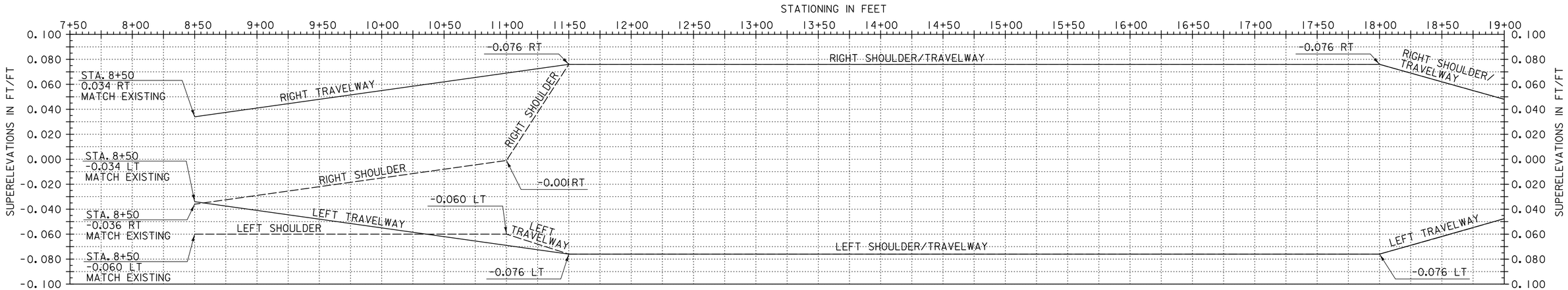

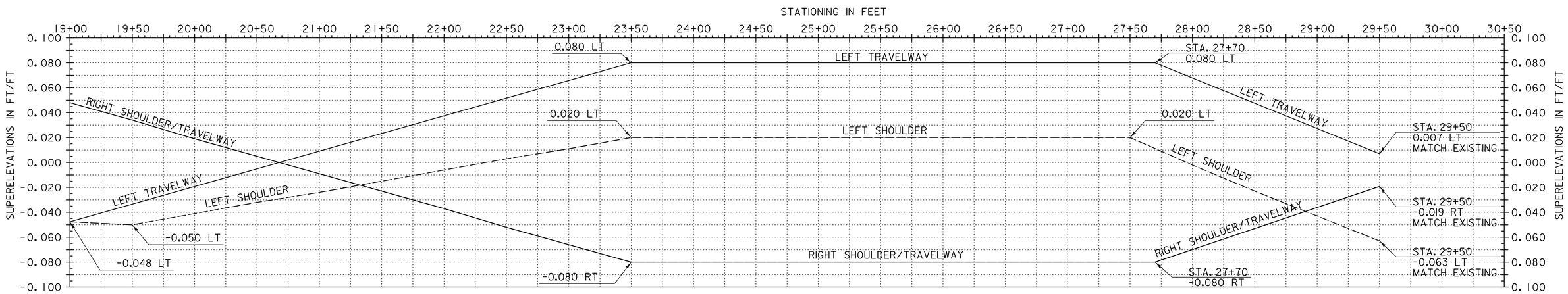

BANKING DIAGRAM - U.S. ROUTE 2

PROJECT NAME: MIDDLESEX	
PROJECT NUMBER: IM 089-2(41)	
FILE NAME: z07a052bdr_BD01.dgn	PLOT DATE: 1/3/2015
PROJECT LEADER: R. HEBERT	DRAWN BY: P. MCCLURE
DESIGNED BY: D. BURHANS	CHECKED BY: D. BRYANT
BANKING DIAGRAM	SHEET 24 OF 154

TRAFFIC CONTROL NOTES

1. TRAFFIC CONTROL SHALL BE PROVIDED IN ACCORDANCE WITH SECTION 641 OF THE STANDARD SPECIFICATION, THE NATIONAL MANUAL ON UNIFORM TRAFFIC CONTROL DEVICES (MUTCD), ITS REVISIONS AND AMENDMENTS, ANY PROVISIONS IN THE PLANS AND/OR PROPOSAL OF THIS PROJECT, AND STATE OF VERMONT STANDARDS. WHERE CONFLICTS EXIST BETWEEN THE STANDARDS AND THE MUTCD, THE MUTCD SHALL GOVERN.

2. THE CONTRACTOR SHALL SUBMIT TRAFFIC CONTROL PHASING PLANS SHOWING THE PROPOSED CONSTRUCTION PHASING AND NECESSARY TRAFFIC CONTROL MEASURES TO THE ENGINEER ONE WEEK PRIOR TO THE PRE-CONSTRUCTION CONFERENCE. THE TRAFFIC CONTROL PLAN SHOWN IS CONSIDERED THE MINIMUM REQUIREMENT FOR SAFE OPERATIONS AND ONLY COVERS CERTAIN MINIMUM REQUIREMENTS FOR SAFE OPERATIONS AND ONLY COVERS CERTAIN PROJECT CONSTRUCTION PHASES. THESE PLANS DO NOT ANTICIPATE ALL POSSIBLE CONTRACTOR ACTIVITIES. ADDITIONAL SIGNS AND/OR TRAFFIC CONTROL DEVICES MAY BE REQUIRED AS DETERMINED BY THE ENGINEER. SHOULD THE CONTRACTOR ELECT TO USE A DIFFERENT CONSTRUCTION PHASING SCHEME THAN THAT SHOWN ON THE TRAFFIC CONTROL PLANS, THE CONTRACTOR SHALL SUBMIT REVISIONS TO THE TRAFFIC CONTROL PLANS FOR APPROVAL. ANY CHANGE THAT ALTERS THE BASIC CONCEPT OF THE PLANS MUST BE SUBMITTED 4-6 WEEKS IN ADVANCE TO THE AGENCY FOR REVIEW AND APPROVAL.

3. TRAFFIC CONTROL SHALL BE IMPLEMENTED AND MAINTAINED AS NEEDED, ALONG I-89 NB AND SB, TO ACCOMMODATE ACCESS TO THE AREA AROUND THE EXISTING AND PROPOSED PIERS FOR THE PURPOSE OF CONSTRUCTION RELATED ACTIVITIES PERTAINING TO THIS PROJECT. PAYMENT WILL BE MADE UNDER ITEM 900.645, “SPECIAL PROVISION (TRAFFIC CONTROL, ALL-INCLUSIVE)”. PAYMENT FOR REMOVING AND RESETTING OF EXISTING GUARDRAIL FOR THE PURPOSES OF ACCESSING THE CONSTRUCTION SITE WILL BE INCIDENTAL TO ITEM 653.35 VEHICLE TRACKING PAD.

4. DURING CONSTRUCTION, THE CONTRACTOR SHALL MAINTAIN TWO-WAY TRAFFIC THROUGHOUT THE PROJECT SITE ON ROUTE 2 AND TWO LANES OF TRAFFIC IN EACH DIRETION ALONG I-89NB AND SB, AS SHOWN ON THE TRAFFIC CONTROL PLAN SHEETS FOR PHASES I, II AND III, EXCEPT AS NOTED ON THE PHASED CONSTRUCTION PLANS.

5. THE CONTRACTOR SHALL SCHEDULE OPERATIONS IN A MANNER THAT REDUCES THE AMOUNT OF TIME THAT NORMAL TRAFFIC FLOWS ARE DISRUPTED.

6. THE PORTION OF THE OVERBUILD, OUTSIDE OF THE PERMANENT PAVEMENT, WHICH IS INTENDED FOR TRAFFIC, SHALL HAVE A MINIMUM DEPTH OF TWO INCHES OF TEMPORARY PAVEMENT OVER 18 INCHES OF SUBBASE. PAYMENT SHALL BE INCLUDED IN THE UNIT PRICE BID FOR ITEM 900.645, “SPECIAL PROVISION (TRAFFIC CONTROL, ALL-INCLUSIVE)”.

7. ALL WORK AND MATERIALS NECESSARY FOR THE SATISFACTORY FURNISHING, PLACEMENT AND REMOVAL OF THE OVERBUILD AND ANY TEMPORARY PAVEMENT NEEDED, OUTSIDE OF THE PERMANENT PAVEMENT, TO ACCOMMODATE THE PHASED CONSTRUCTION WILL BE INCIDENTAL TO ITEM 900.645, “SPECIAL PROVISION (TRAFFIC CONTROL, ALL-INCLUSIVE)”. THIS SHALL INCLUDE, BUT IS NOT LIMITED TO THE EXCAVATION, EMBANKMENT, SUBBASE, TEMPORARY PAVEMENT, PAVEMENT MARKINGS, AND TEMPORARY SEEDING /MULCHING, NEEDED BEYOND THAT WHICH IS REQUIRED FOR THE FINAL BUILD AS SHOWN ON THE LAYOUT AND TYPICAL SECTION PLANS. IT SHALL ALSO INCLUDE THE TEMPORARY TRAFFIC BARRIER AND THE TEMPORARY SHEETING AND BRACING.

8. THE DESIGN OF THE TEMPORARY SHEETING AND BRACING SHALL BE THE RESPONSIBILITY OF THE CONTRACTOR AND SHALL BE IN ACCORDANCE WITH STANDARD SPECIFICATIONS 505 AND 528, RESPECTIVELY. PAYMENT SHALL BE INCLUDED IN THE UNIT PRICE BID FOR ITEM 900.645, “SPECIAL PROVISION (TRAFFIC CONTROL, ALL-INCLUSIVE)”. THE DESIGN OF TEMPORARY SHEETING AND BRACING SHOULD CONSIDER POTENTIAL SHALLOW BEDROCK CONDITIONS WHERE APPLICABLE.

9. IN ORDER TO MAINTAIN EFFECTIVE TRAFFIC CONTROL, THE CONTRACTOR SHALL BE RESPONSIBLE FOR MAKING SURE THAT THE SIGNS AND OTHER TRAFFIC CONTROL DEVICES ARE IN GOOD CONDITION AND ARE IN PLACE. SIGNS SHALL BE LOCATED IN ACCORDANCE WITH VAOT STANDARD DRAWINGS T-1, T-10,T-11, T-12, T-28, T-30, AND T-31AS WELL AS ANY OTHER APPLICAPLE STANDARD DRAWING. THE SOLE JUDGE OF THE EFFECTIVENESS OF THE CONTRACTOR'S EFFORT TOWARD THE PROTECTION OF TRAFFIC AND PERSONNEL IS THE ENGINEER.

10. A TEMPORARY SPEED LIMIT REDUCTION OF 10 MPH SHALL BE INSTITUTED FOR THIS CONSTRUCTION PROJECT. THE ADDITION OF CORRESPONDING WARNING AND REGULATORY SIGNS SHALL BE INCORPORATED INTO THE TEMPORARY TRAFFIC CONTROL SIGN PACKAGE BETWEEN THE "ROAD WORK AHEAD" AND " ROAD WORK 500 FT" SIGNS FOR THIS TEMPORARY SPEED REDUCTION.

11. INSTALL SIGNS AND PAVEMENT MARKINGS AS SHOWN ON THE STANDARD DETAIL PLANS PRIOR TO OPENING ANY PORTION OF THE PROJECT TO FINAL AND/OR DETOUR TRAFFIC. CARE MUST BE TAKEN TO ENSURE THAT FINAL SIGNS AND PAVEMENT MARKINGS DO NOT CONFLICT WITH PROPOSED TRAFFIC PATTERNS IN ANY ONE STAGE. FINAL SIGNS THAT ARE IN PLACE BUT ARE NOT BEING USED SHALL BE COVERED.

12. THE COVERING AND REMOVAL OF EXISTING SIGNS SHALL BE AS ORDERED BY THE ENGINEER. EXISTING SIGNING SHALL BE DELIVERED TO THE VTRANS DISTRICT 6 MIDDLESEX GARAGE. THE DELIVERY SHALL BE COORDINATED WITH JOHN DUNBAR, VTRANS OPERATIONS, ONE WEEK PRIOR TO DELIVERY. PAYMENT FOR COVERING OR REMOVAL OF SIGNS SHALL BE INCLUDED IN THE PRICE BID FOR ITEM 900.645, “SPECIAL PROVISION (TRAFFIC CONTROL, ALL-INCLUSIVE)”.

13. CONSTRUCTION SIGNS WITH YIELDING POSTS, ALL OTHER TEMPORARY TRAFFIC CONTROL DEVICES, TEMPORARY STRIPING, RAISED PAVEMENT MARKERS, TEMPORARY TRAFFIC BARRIER, AND THE REMOVE AND RESETTING OF TEMPORARY TRAFFIC BARRIER, AND ENERGY ABSORPTION ATTENUATORS SHALL BE PAID FOR UNDER ITEM 900.645, “SPECIAL PROVISION (TRAFFIC CONTROL, ALL-INCLUSIVE)”.

14. ANY EXISTING PAVEMENT MARKINGS THAT CONFLICT WITH THE PROPOSED TRAFFIC CONTROL LAYOUT SHALL BE COVERED IN ACCORDANCE WITH SUBSECTION 646.08(B). PAINTING OUT EXISTING LINES WILL NOT BE ACCEPTABLE. PAYMENT SHALL BE INCLUDED IN THE UNIT PRICE BID FOR ITEM 900.645, “SPECIAL PROVISION (TRAFFIC CONTROL, ALL-INCLUSIVE)”.

15. BEFORE TRAFFIC CAN UTILIZE CONSTRUCTED ROADWAYS, ALL DRAINAGE STRUCTURES, GUARDRAIL AND BARRIERS SHALL BE IN PLACE.

16. THE CONTRACTOR SHALL COORDINATE WORK NEAR AND WITHIN THE RAILROAD RIGHT-OF-WAY IN ACCORDANCE WITH THE RAILROAD AGREEMENT IN THE CONTRACT DOCUMENTS.

17. ALL DROP-OFF AREAS WITHIN CONSTRUCTION AND MAINTENANCE WORK ZONE AREAS SHALL BE PROTECTED FROM ADJACENT TRAVEL LANES IN ACCORDANCE WITH POLICIES FOLLOWED BY THE AGENCY (SEE STD. T-35 AND T-36).

18. THE PORTABLE CHANGEABLE MESSAGE SIGNS (PCMS) SHALL BE IN USE TWO WEEKS PRIOR TO THE PROJECT START TO WARN THE PUBLIC OF TRAFFIC DISRUPTION OVER THE BRIDGE.

19. TEMPORARY LANE WIDTHS SHALL BE A MINIMUM OF 11 FEET UNLESS OTHERWISE NOTED.

20. WORK ZONES ON OPPOSITE SIDES OF THE ROADWAY THAT WILL CONSTRICT THE TRAFFIC FLOWS SHOWN ON THE PHASING PLANS SHALL NOT BE PERMITTED.

21. THE PHASED CONSTRUCTION TYPICAL SECTION SHOW TEMPORARY CONCRETE BARRIER, PINNED WITHIN 1’ OF THE STEEP SLOPES OR TEMPORARY SHEETING AND BRACING. IT IS THE CONTRACTOR’S RESPONSIBILITY TO OBTAIN AND INSTALL BARRIER WHICH IS DESIGNED TO MEET THIS 1’ OFFSET REQUIREMENT.

22. WHEN TEMPORARY TRAFFIC BARRIER IS USED, BARRIER ENDS SHALL BE TAPERED BEYOND THE CLEAR ZONE OR PROTECTED WITH AN ENERGY ABSORPTION ATTENUATOR OR AN EQUIVALENT APPROVED END TREATMENT DESIGNED FOR THE 85 PERCENTILE SPEED OR THE POSTED SPEED LIMIT OF THE ROADWAY.

23. THE ENERGY ABSORPTION ATTENUATORS FOR THIS PROJECT SHALL BE SUITABLE FOR A NARROW WIDTH APPLICATION AND SHALL BE INSTALLED AS SHOWN IN THE MAINTENANCE OF TRAFFIC PLAN SHEETS. THE PAYMENT FOR FURNISHING, MAINTAINING, INSTALLATION AND REMOVAL OF THESE ATTENUATORS WILL BE INCIDENTAL TO ITEM 900.645, “SPECIAL PROVISION (TRAFFIC CONTROL, ALL-INCLUSIVE)”. THE ATTENUATORS SHALL BE FURNISHED IN ACCORDANCE WITH SECTION 621 AND MEET THE REQUIREMENTS OF THE LATEST VERSION OF THE AASHTO “ROADSIDE DESIGN GUIDE”.

24. HIGHWAY PARKING RESTRICTIONS: ONLY SUCH TRUCKS AND EQUIPMENT AS ARE NECESSARY FOR THE CONSTRUCTION OF THIS PROJECT WILL BE PERMITTED TO STOP OR PARK ON THE SHOULDERS OR RIGHT-OF-WAY OF THE HIGHWAY. ALL TRUCKS OR EQUIPMENT SO STOPPED OR PARKED SHALL BE AT LEAST 4 FT FROM THE EDGE OF THE THROUGH TRAFFIC LANES. PARKING OR STOPPING ON THE TRAVELED PORTION OF THE ROADWAY WILL NOT BE PERMITTED UNLESS AUTHORIZED BY THE ENGINEER TO MEET FIELD CONDITIONS.

25. PRIVATE AUTOMOBILES OF WORKERS WILL NOT BE PERMITTED TO STOP OR PARK ON THE SHOULDERS OR RIGHT-OF-WAY OF THE HIGHWAY.

26. EACH OF THE CONTRACTOR'S TRUCKS OR EQUIPMENT USED FOR THE CONSTRUCTION OF THIS PROJECT AND PERMITTED TO PARK OR STOP AS PROVIDED ABOVE, SHALL BE EQUIPPED WITH FLASHING LIGHT SIGNALS ON THE FRONT AND REAR AND THE SIGNALS SHALL BE OPERATING AT ALL TIMES WHEN PARKED OR STOPPED ON THE HIGHWAY UNLESS OTHERWISE AUTHORIZED BY THE ENGINEER.

27. THE FLASHING LIGHT SIGNALS SHALL BE VISIBLY DISTINCT, AND PHYSICALLY SEPARATE, FROM THE HAZARD WARNING SYSTEM REQUIRED BY FEDERAL AND STATE MOTOR VEHICLE LAWS AND REGULATIONS. AT LEAST ONE OF THESE FLASHING LIGHT SIGNALS SHALL BE VISIBLE TO TRAFFIC APPROACHING FROM ANY ANGLE AT ALL TIMES.

28. QUALIFIED TRAFFIC CONTROL PERSONNEL SHALL BE EMPLOYED WHENEVER THE CONTRACTOR'S VEHICLES OR EQUIPMENT (INCLUDING THAT WHICH BELONGS TO THE INDIVIDUAL WORKERS) ENTER OR LEAVE THE TRAFFIC FLOW. ALL MOVEMENTS, INTO OR OUT OF THE TRAFFIC FLOW, SHALL BE WITH THE FLOW OF TRAFFIC.

29. RESIDENTIAL OWNERS AND/OR OCCUPANTS SHALL BE NOTIFIED 24 HOURS IN ADVANCE OF WORK THAT WILL CUT OFF ACCESS. THE CONTRACTOR IS REQUIRED TO ALLOW ACCESS TO ALL PROPERTIES AT ALL TIMES FOR EMERGENCY VEHICLES.

PHASED CONSTRUCTION TYPICAL SECTIONS - PHASE I

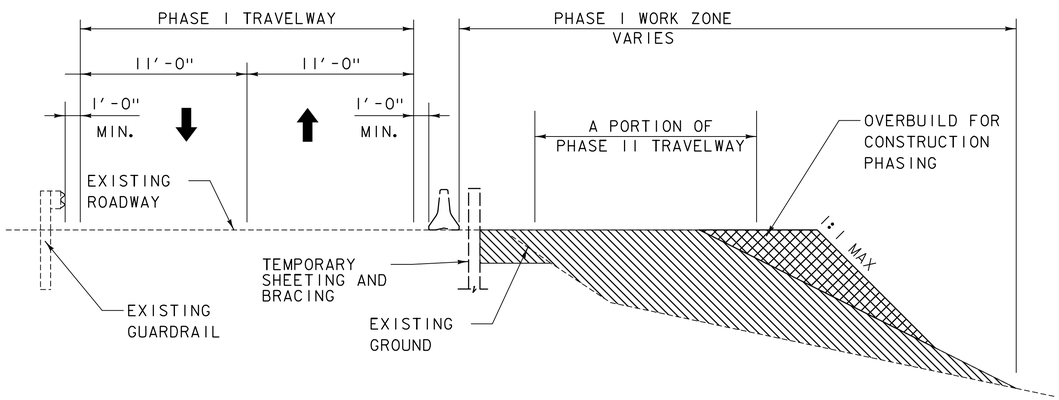

APPROX. STA 10+50 TO 11+00

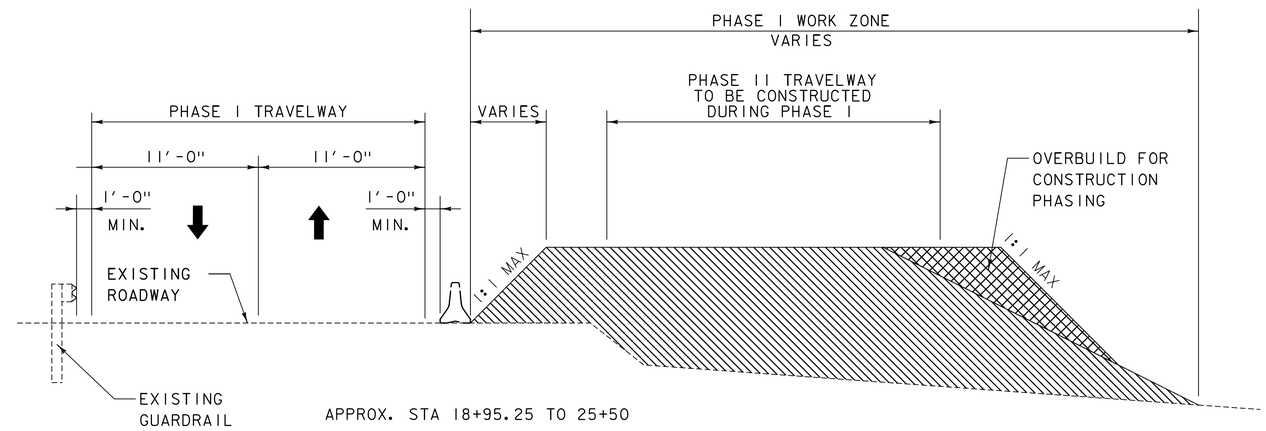

APPROX. STA 18+95.25 TO 25+50

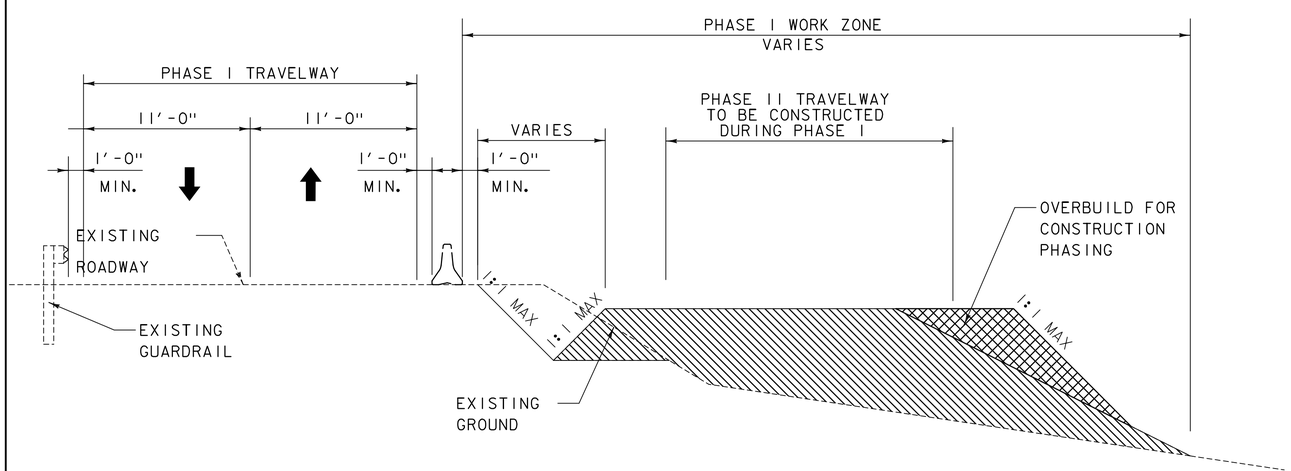

APPROX. STA 11+00 TO 11+80

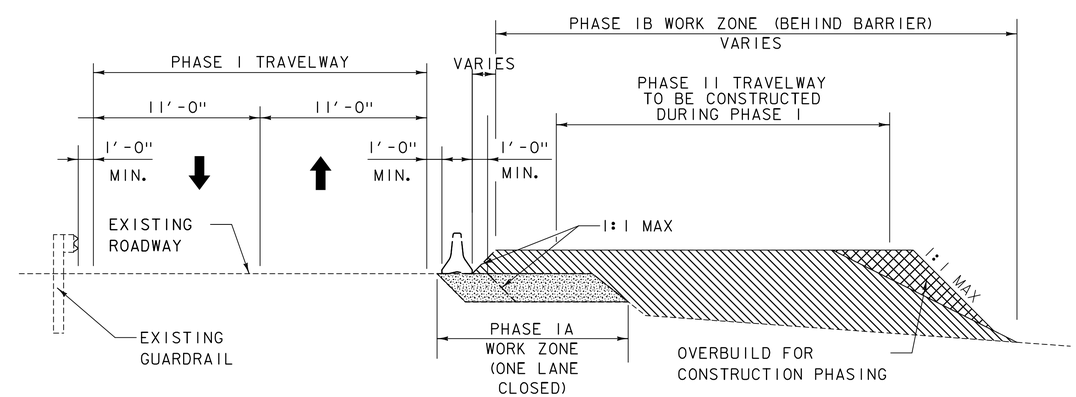

APPROX. STA 8+00 TO 10+50
APPROX. STA 25+50 TO 29+50

PROJECT NAME: MIDDLESEX	
PROJECT NUMBER: IM 089-2(41)	
FILE NAME: z07a052typ_mot.dgn	PLOT DATE: 1/3/2015
PROJECT LEADER: R. HEBERT	DRAWN BY: D. BRYANT
DESIGNED BY: D. BRYANT	CHECKED BY: D. BURHANS
PHASED CONSTRUCTION TYPICAL SECTIONS-I	SHEET 26 OF 154

PHASED CONSTRUCTION TYPICAL SECTIONS - PHASE II

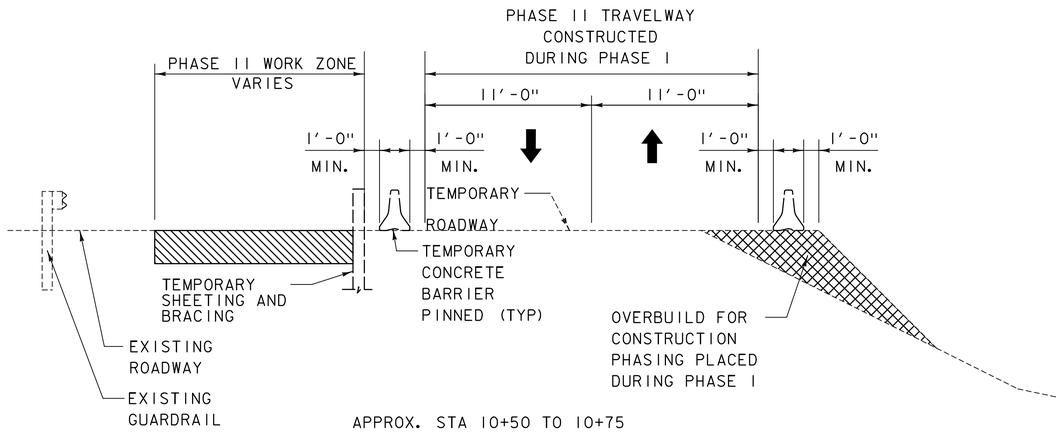

APPROX. STA 10+50 TO 10+75

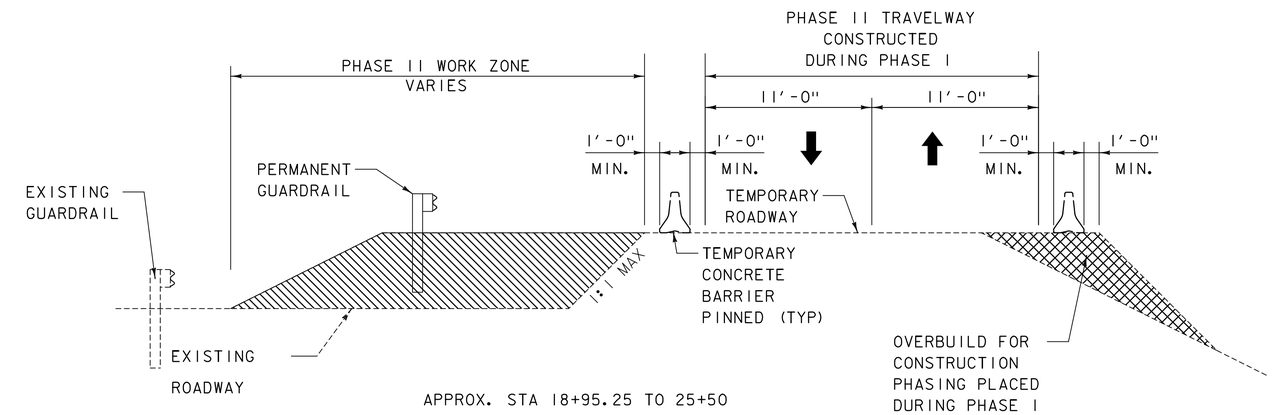

APPROX. STA 18+95.25 TO 25+50

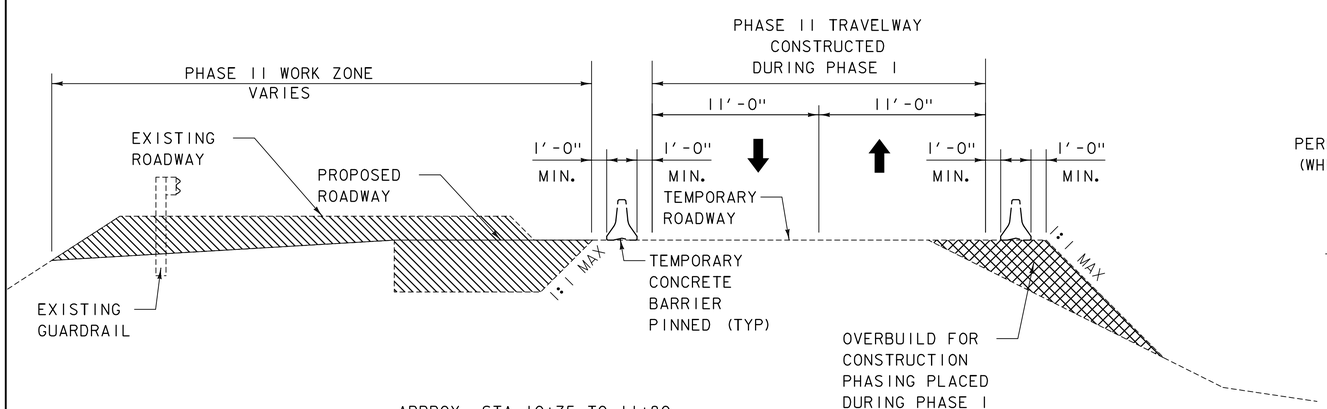

APPROX. STA 10+75 TO 11+80

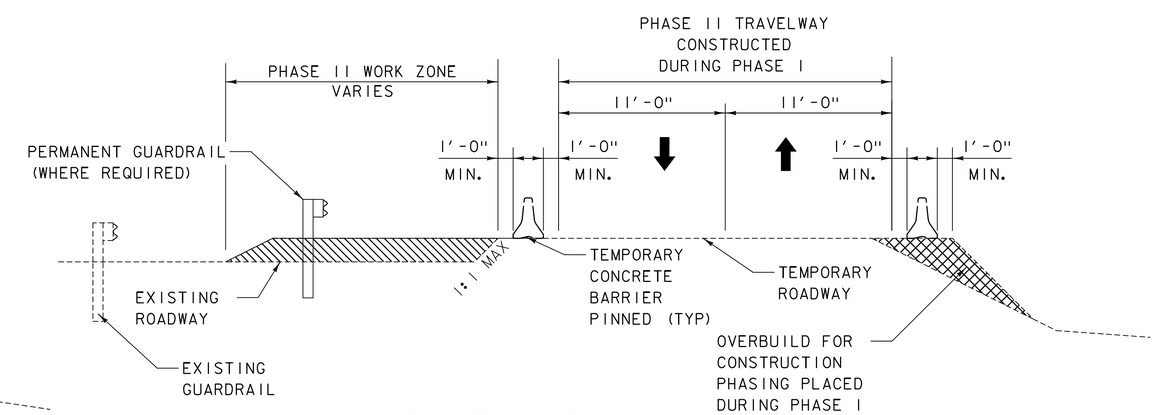

APPROX. STA 8+00 TO 10+50
APPROX. STA 25+50 TO 29+50

PROJECT NAME: MIDDLESEX	
PROJECT NUMBER: IM 089-2(41)	
FILE NAME: z07a052typ_mot.dgn	PLOT DATE: 1/3/2015
PROJECT LEADER: R. HEBERT	DRAWN BY: D. BRYANT
DESIGNED BY: D. BRYANT	CHECKED BY: D. BURHANS
PHASED CONSTRUCTION TYPICAL SECTIONS-2	SHEET 27 OF 154

PHASED CONSTRUCTION TYPICAL SECTION - PHASE III

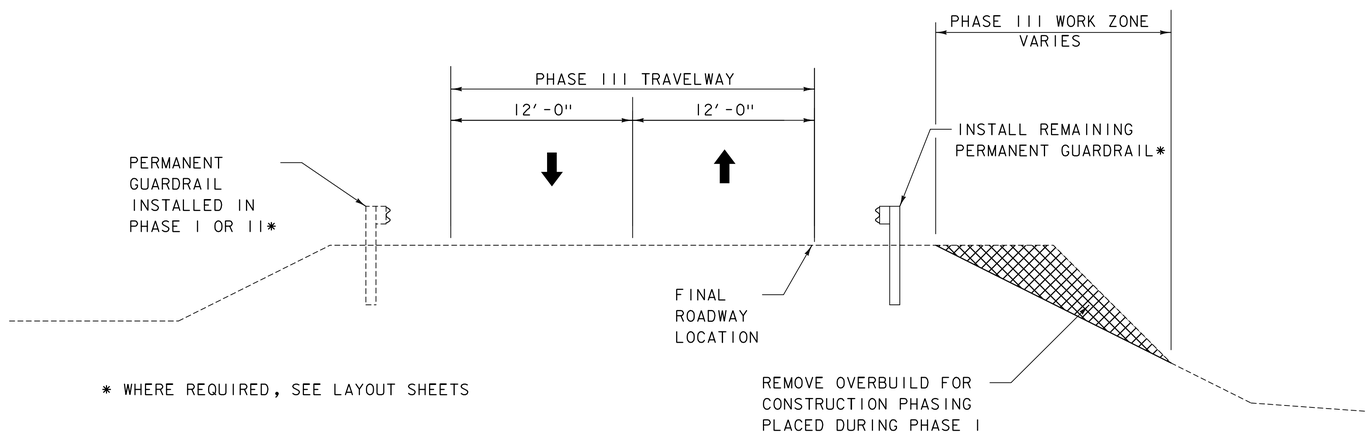

* WHERE REQUIRED, SEE LAYOUT SHEETS

PROJECT NAME: MIDDLESEX	
PROJECT NUMBER: IM 089-2(41)	
FILE NAME: z07a052typ_mot.dgn	PLOT DATE: 1/3/2015
PROJECT LEADER: R. HEBERT	DRAWN BY: D. BRYANT
DESIGNED BY: D. BRYANT	CHECKED BY: D. BURHANS
PHASED CONSTRUCTION TYPICAL SECTIONS-3	SHEET 28 OF 154

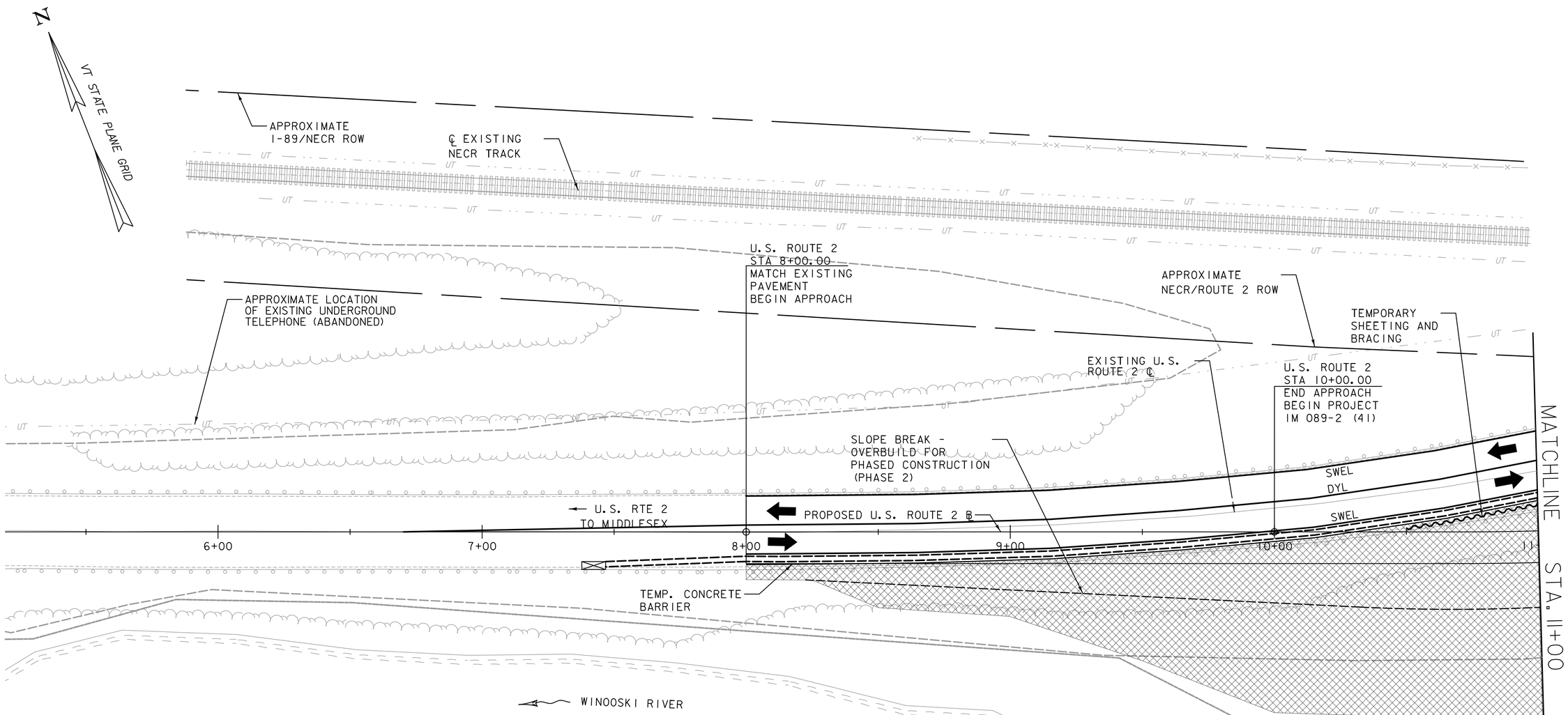

SUGGESTED SEQUENCE OF CONSTRUCTION ~ PHASE I

1. USING FLAGGERS AND ONE-WAY ALTERNATING TRAFFIC COMPLETE EXCAVATION FOR ROADWAY WIDENING AND PLACE SUBBASE (SEE PHASE IA - PHASED CONSTRUCTION TYPICAL SECTIONS SHEET -1).
2. INSTALL TEMPORARY BARRIER AND SHIFT TRAFFIC TO THE NORTHERN SIDE OF THE EXISTING APPROACHES WITH REDUCED TRAVELWAY WIDTHS AS SCHEMATICALLY SHOWN.
3. INSTALL TEMPORARY SHEET PILES NEAR EXISTING WEST ABUTMENT AND NEAR PROPOSED ABUTMENT NO. 2, AS SHOWN CONCEPTUALLY.
4. CONSTRUCT PROPOSED SOUTH SIDE APPROACHES TO TOP OF BINDER COURSE FROM STA. 8+00 TO STA. 12+00 AND FROM STA. 26+50 TO STA. 31+00 (DO NOT CONSTRUCT WEARING COURSE), CONSTRUCT SOUTH SIDE APPROACHES TO TOP OF WEARING COURSE IN OTHER LOCATIONS. CONSTRUCT ABUTMENTS, PIERS, MSE WALLS #1 & #3 AND BRIDGE SUPERSTRUCTURE.
5. INSTALL GUARD RAIL, ALONG I-89 SB, AS SHOWN CONCEPTUALLY.

PHASED CONSTRUCTION PLAN - PHASE I

LEGEND

- PHASE I NEW CONSTRUCTION
- PHASE II NEW CONSTRUCTION
- PHASE III NEW CONSTRUCTION
- TRAFFIC FLOW
- TEMPORARY CONCRETE BARRIER
- TEMPORARY SHEETING AND BRACING
- ENERGY ABSORPTION ATTENUATOR
- SWEL TEMPORARY 4" SINGLE WHITE EDGE LINE
- DYL TEMPORARY 4" DOUBLE YELLOW CENTER LINE
- PLASTIC DRUM

SCALE 1" = 20'-0"
20 0 20

PROJECT NAME: MIDDLESEX	
PROJECT NUMBER: IM 089-2(41)	
FILE NAME: z07a052mo1_plpl01.dgn	PLOT DATE: 1/3/2015
PROJECT LEADER: R. HEBERT	DRAWN BY: P. MCCLURE
DESIGNED BY: D. BURHANS	CHECKED BY: D. BRYANT
PHASED CONSTRUCTION LAYOUT SHEET - 1	SHEET 29 OF 154

N

VT STATE PLANE GRID

APPROXIMATE I-89/NECR ROW

APPROXIMATE NECR/ROUTE 2 ROW

EXISTING U.S. ROUTE 2 ℄

TEMP. CONCRETE BARRIER

TEMPORARY SHEETING AND BRACING

APPROXIMATE BEGINNING OF UNDERGROUND TELECOMMUNICATION LINE (AT&T) (4" DIA. SCHEDULE 40 STEEL PIPE CASING)

EXISTING U.S. ROUTE 2 BRIDGE

STA 13+82.75
BEGIN BRIDGE

APPROXIMATE LOCATION OF EXISTING TELEPHONE ON BRIDGE (ABANDONED)

SWEL

DYL

SWEL

MATCHLINE STA. 11+00

MATCHLINE STA. 16+50

MSE WALL #1 (SEE MSE WALL 1 PLAN)

℄ EXISTING NECR TRACK

PLASTIC DRUM (TYP)

CZ

12+00

13+00

14+00

15+00

16+00

INSTALL PIPE

INSTALL PIPE

SLOPE BREAK - OVERBUILD FOR PHASED CONSTRUCTION (PHASE 11)

INSTALL PORTION OF GUARDRAIL

INSTALL GUARDRAIL APPROACH SECTION (TYP.)

MSE WALL #1

APPROXIMATE LOCATION OF UNDERGROUND TELECOMMUNICATION LINE (AT&T) (2-1¼" DIA. INNERDUCT CONDUIT)

APPROXIMATE ROUTE 2 ROW

NOTE

SEE NOTES AND LEGEND ON PHASED CONSTRUCTION LAYOUT SHEET - 1

PHASED CONSTRUCTION PLAN - PHASE 1

SCALE 1" = 20'-0"
20 0 20

PROJECT NAME: MIDDLESEX	
PROJECT NUMBER: IM 089-2(41)	
FILE NAME: z07a052mot_plpl02.dgn	PLOT DATE: 1/3/2015
PROJECT LEADER: R. HEBERT	DRAWN BY: D. BURHANS
DESIGNED BY: D. BURHANS	CHECKED BY: D. BRYANT
PHASED CONSTRUCTION LAYOUT SHEET - 2	SHEET 30 OF 154

N

VT STATE PLANE GRID

APPROXIMATE I-89 ROW

TEMPORARY SHEETING AND BRACING

APPROXIMATE ROUTE 2 ROW

EXISTING U.S. ROUTE 2 BRIDGE

STA 18+95.25 END BRIDGE

TEMP. CONCRETE BARRIER

SLOPE BREAK - OVERBUILD FOR PHASED CONSTRUCTION (PHASE II)

EXISTING U.S. ROUTE 2 ℄

℄ BRG. PIER #2

SWEL

DYL

SWEL

PLASTIC DRUM (TYP)

STONE FILL TYPE I

STA. 16+50

MATCHLINE

17+00

18+00

19+00

+32.21

PROPOSED U.S. ROUTE 2 ℄

20+00

+32.21

21+00

MATCHLINE STA 22+00

I-89 SB TO MONTPELIER

TEMPORARY SHEETING AND BRACING (TYP.)

INSTALL GUARD RAIL

GUARDRAIL END TREATMENT (GI-D)

INSTALL PORTION OF FINAL GUARDRAIL

APPROXIMATE I-89/NECR ROW

I-89 NB TO WATERBURY

℄ BRG. ABUT. #2

INSTALL GUARDRAIL APPROACH SECTION (TYP)

MSE WALL #3

APPROXIMATE LOCATION OF EXISTING UNDERGROUND TELEPHONE (ABANDONED)

EXISTING NECR TRACK

APPROXIMATE ROUTE 2 ROW

NOTE

SEE NOTES AND LEGEND ON PHASED CONSTRUCTION LAYOUT SHEET - 1

APPROXIMATE I-89 ROW

PHASED CONSTRUCTION PLAN - PHASE 1

SCALE 1" = 20'-0"

20 0 20

PROJECT NAME: MIDDLESEX	
PROJECT NUMBER: IM 089-2(41)	
FILE NAME: z07a052mo1_plp103.dgn	PLOT DATE: 1/3/2015
PROJECT LEADER: R. HEBERT	DRAWN BY: D. BURHANS
DESIGNED BY: D. BURHANS	CHECKED BY: D. BRYANT
PHASED CONSTRUCTION LAYOUT SHEET - 3	SHEET 31 OF 154

N

VT STATE PLANE GRID

APPROXIMATE ROUTE 2 ROW

U.S. ROUTE 2
STA 23+50.00
END PROJECT
IM 089-2 (41)
BEGIN APPROACH

PROPOSED U.S. ROUTE 2 ℄

PLUG AND ABANDON EXISTING D.I.

PLUG AND ABANDON EXISTING PIPE

EXISTING U.S. ROUTE 2 ℄

PLUG AND ABANDON EXISTING PIPE

NEW HEADWALL

MATCHLINE STA 22+00

23+00

24+00

25+00

26+00

27+00

MATCHLINE STA. 27+50

SLOPE BREAK - FINAL BUILD

SLOPE BREAK - OVERBUILD FOR PHASED CONSTRUCTION (PHASE 2)

TEMP. CONCRETE BARRIER

INSTALL NEW PIPE

APPROXIMATE LOCATION OF EXISTING UNDERGROUND TELEPHONE (ABANDONED)

INSTALL NEW PIPE

PLUG AND ABANDON EXISTNG PIPE

INSTALL NEW PIPE

APPROXIMATE ROUTE 2 ROW

NOTE

SEE NOTES AND LEGEND ON PHASED CONSTRUCTION LAYOUT SHEET - 1

SCALE 1" = 20'-0"
20 0 20

PROJECT NAME: MIDDLESEX	
PROJECT NUMBER: IM 089-2(41)	
FILE NAME: z07a052mot_plpl04.dgn	PLOT DATE: 1/3/2015
PROJECT LEADER: R. HEBERT	DRAWN BY: D. BURHANS
DESIGNED BY: D. BURHANS	CHECKED BY: D. BRYANT
PHASED CONSTRUCTION LAYOUT SHEET - 4	SHEET 32 OF 154

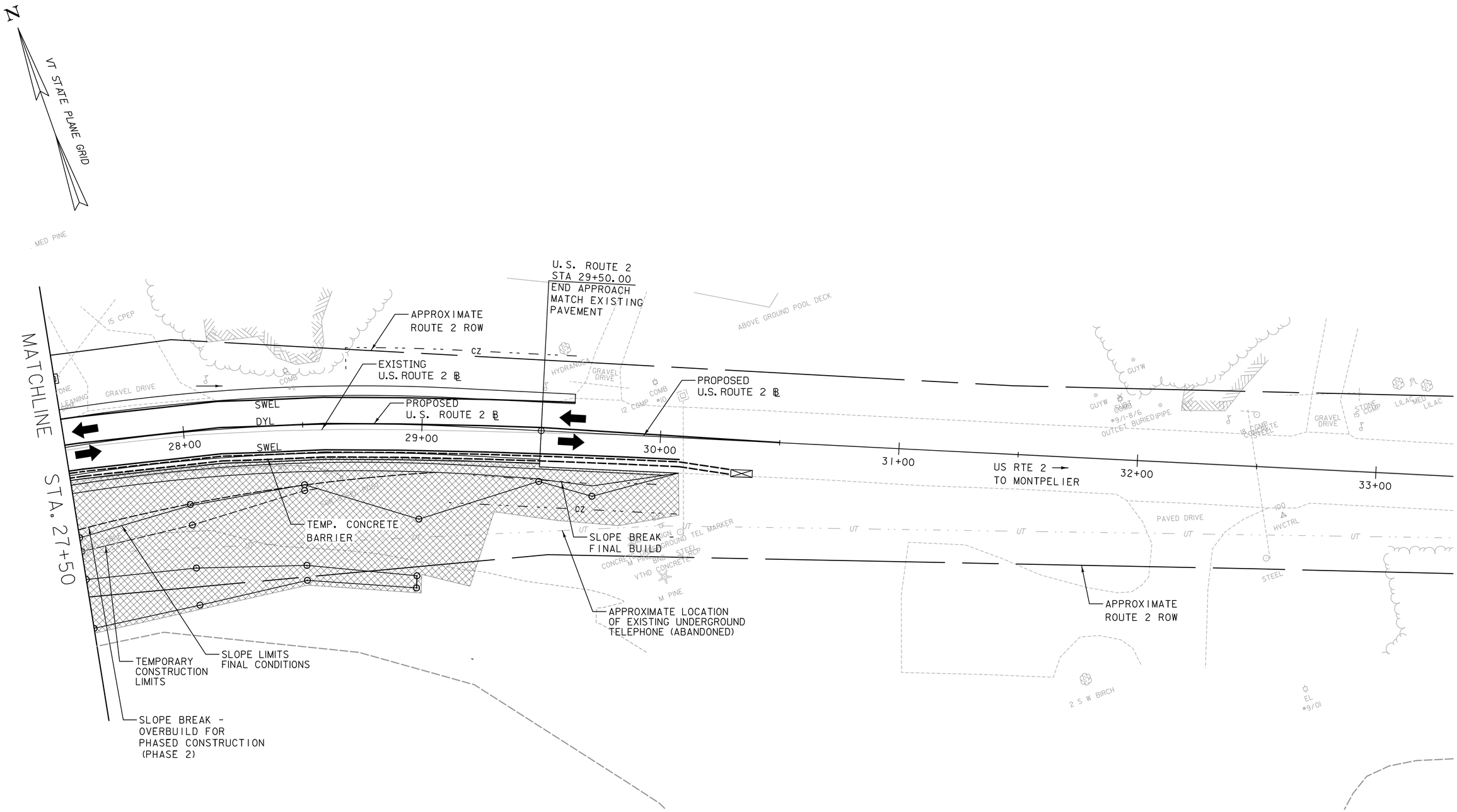

NOTE

SEE NOTES AND LEGEND ON PHASED CONSTRUCTION LAYOUT SHEET - 1

PHASED CONSTRUCTION PLAN - PHASE 1

SCALE 1" = 20'-0"
20 0 20

PROJECT NAME: MIDDLESEX	
PROJECT NUMBER: IM 089-2(41)	
FILE NAME: z07a052mo1_plp105.dgn	PLOT DATE: 1/3/2015
PROJECT LEADER: R. HEBERT	DRAWN BY: D. BURHANS
DESIGNED BY: D. BURHANS	CHECKED BY: D. BRYANT
PHASED CONSTRUCTION LAYOUT SHEET - 5	SHEET 33 OF 154

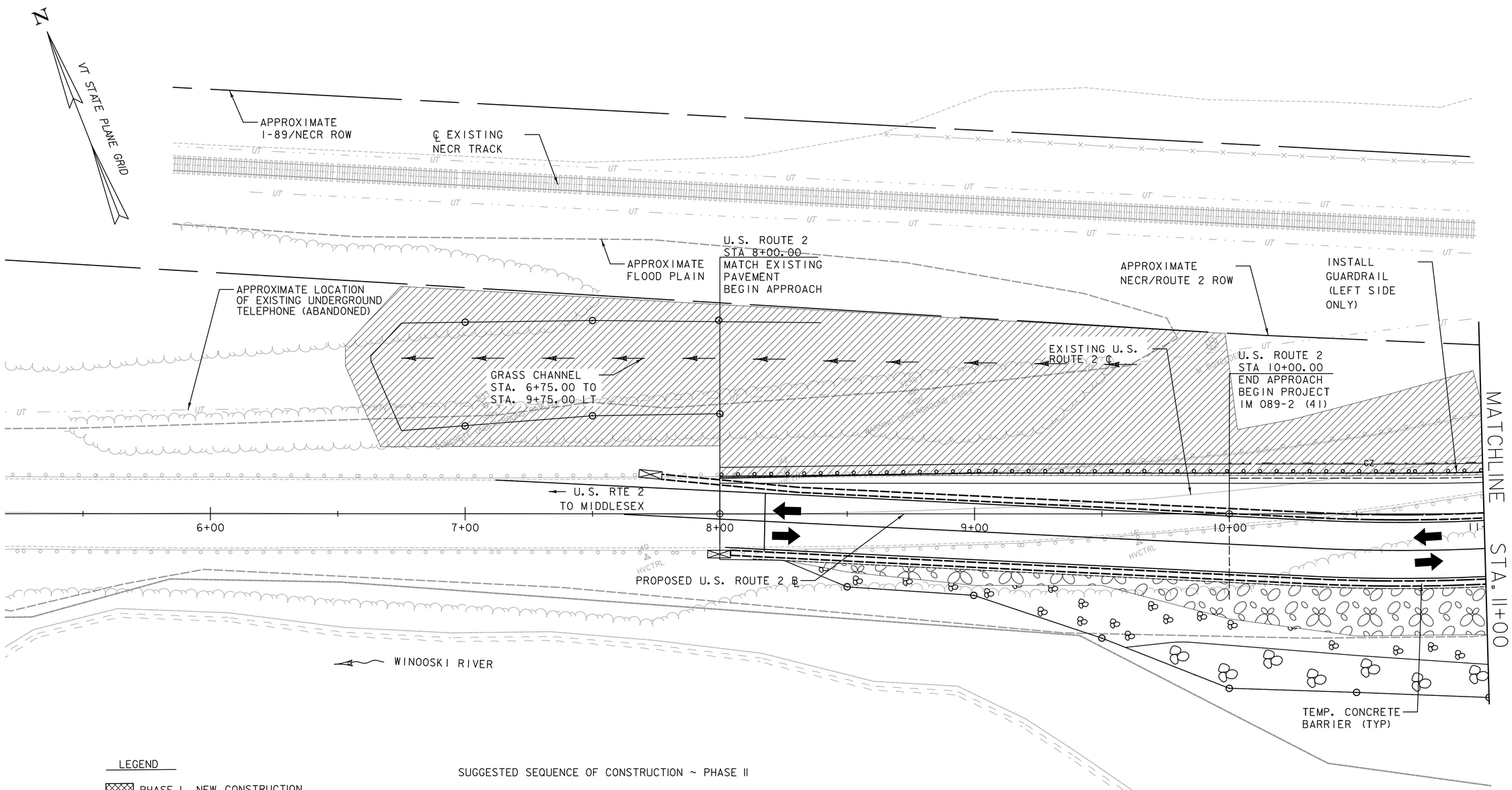

LEGEND

- PHASE I NEW CONSTRUCTION
- PHASE II NEW CONSTRUCTION
- PHASE III NEW CONSTRUCTION
- TRAFFIC FLOW
- TEMPORARY CONCRETE BARRIER
- TEMPORARY SHEETING AND BRACING
- ENERGY ABSORPTION ATTENUATOR
- PLASTIC DRUM
- OVERBUILD

SUGGESTED SEQUENCE OF CONSTRUCTION ~ PHASE II

1. INSTALL TEMPORARY BARRIER AND SHIFT TRAFFIC TO THE SOUTH SIDE OF THE PROPOSED APPROACHES AND FROM EXISTING BRIDGE TO NEW BRIDGE WITH REDUCED LANE WIDTHS AS SCHEMATICALLY SHOWN.

2. REMOVE THE EXISTING BRIDGE AND APPROACHES TO THE EXTENTS SHOWN.

3. CONSTRUCT PROPOSED NORTH SIDE APPROACHES TO TOP OF BINDER COURSE FROM STA. 8+00 TO STA. 12+00 AND FROM STA. 26+50 TO STA. 31+00 (DO NOT CONSTRUCT WEARING COURSE). CONSTRUCT PROPOSED NORTH SIDE APPROACHES TO TOP OF WEARING COURSE IN OTHER LOCATIONS AND MSE WALL #2.

4. REMOVE TEMPORARY SHEETING AND BRACING NEAR EXISTING WEST ABUTMENT AND NEAR ABUTMENT NO. 2. ANY SHEETING AND BRACING TO BE LEFT IN PLACE PERMANENTLY SHALL BE CUT OR OTHERWISE REMOVED SUCH THAT THE FINAL ELEVATION OF THE TOP IS 1' BELOW FINAL GRADE.

SCALE 1" = 20'-0"
20 0 20

PROJECT NAME: MIDDLESEX	
PROJECT NUMBER: IM 089-2(41)	
FILE NAME: z07a052mot_p2p101.dgn	PLOT DATE: 1/3/2015
PROJECT LEADER: R. HEBERT	DRAWN BY: D. BURHANS
DESIGNED BY: D. BURHANS	CHECKED BY: D. BRYANT
PHASED CONSTRUCTION LAYOUT SHEET - 6	SHEET 34 OF 154

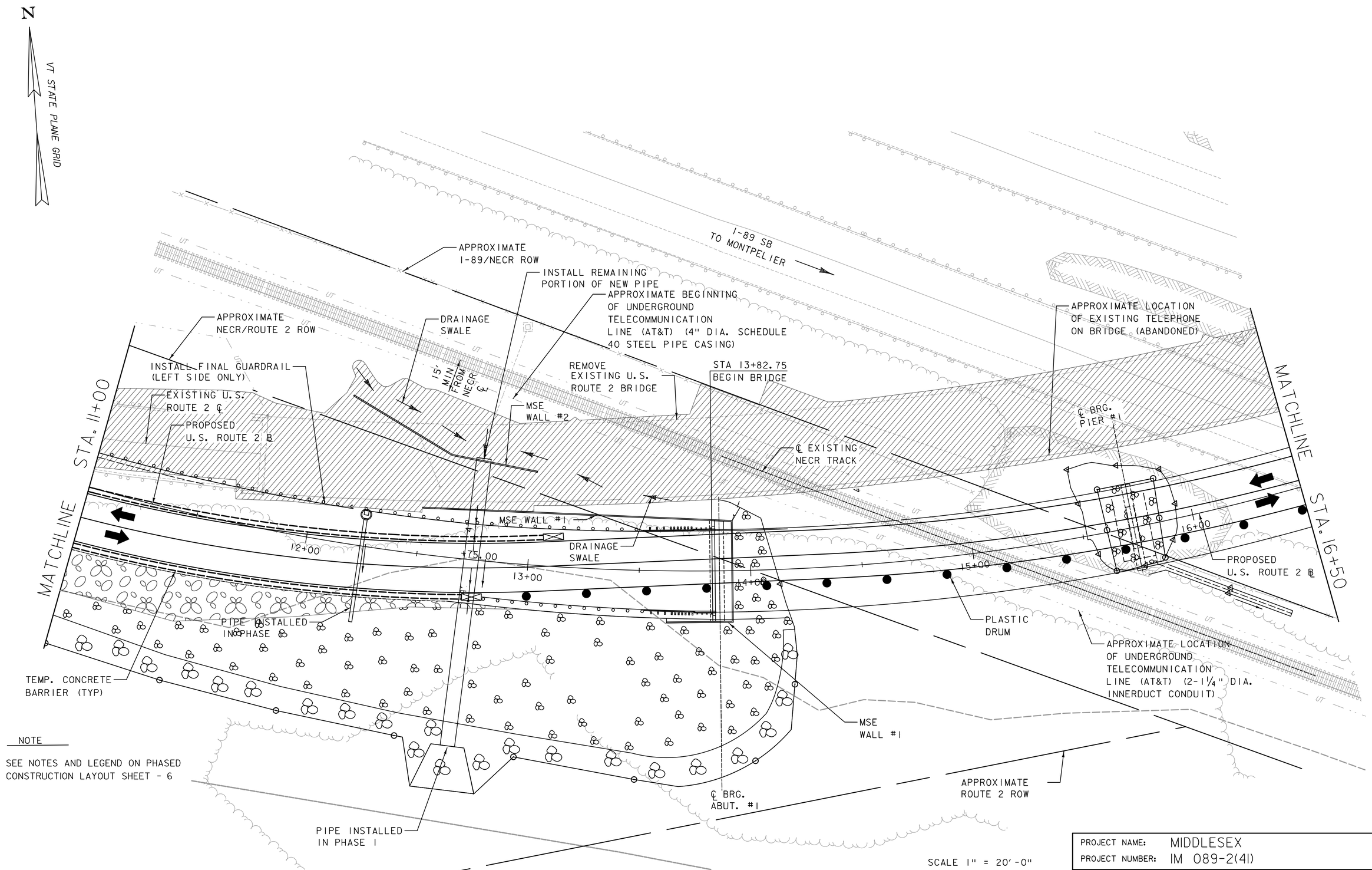

NOTE

SEE NOTES AND LEGEND ON PHASED CONSTRUCTION LAYOUT SHEET - 6

PHASED CONSTRUCTION PLAN - PHASE II

PROJECT NAME: MIDDLESEX	
PROJECT NUMBER: IM 089-2(41)	
FILE NAME: z07a052mot_p2pl02.dgn	PLOT DATE: 1/3/2015
PROJECT LEADER: R. HEBERT	DRAWN BY: D. BURHANS
DESIGNED BY: D. BURHANS	CHECKED BY: D. BRYANT
PHASED CONSTRUCTION LAYOUT SHEET - 7	SHEET 35 OF 154

N

VT STATE PLANE GRID

APPROXIMATE
I-89 ROW

APPROXIMATE
ROUTE 2
ROW

REMOVE
EXISTING U.S.
ROUTE 2 BRIDGE

STA 18+95.25
END BRIDGE

℄ BRG.
PIER #2

STA. 16+50

MATCHLINE

EXISTING U.S.
ROUTE 2 ℄

TEMP CONCRETE
BARRIER (TYP)

17+00

18+00

19+00

20+00

21+00

22+

PROPOSED
U.S. ROUTE 2 ℄

PLASTIC
DRUM

I-89 SB
TO MONTPELIER

TEMP CONCRETE
BARRIER (TYP)

MATCHLINE STA 22+00

APPROXIMATE
I-89/NECR ROW

℄ BRG.
ABUT. #2

I-89 NB
TO WATERBURY

STONE FILL
TYPE II

APPROXIMATE LOCATION
OF EXISTING UNDERGROUND
TELEPHONE (ABANDONED)

EXISTING
NECR
TRACK

APPROXIMATE
ROUTE 2 ROW

APPROXIMATE
I-89 ROW

NOTE

SEE NOTES AND LEGEND ON PHASED
CONSTRUCTION LAYOUT SHEET - 6

PHASED CONSTRUCTION PLAN - PHASE II

SCALE 1" = 20'-0"
20 0 20

PROJECT NAME:	MIDDLESEX
PROJECT NUMBER:	IM 089-2(41)

FILE NAME: z07a052mot_p2p103.dgn	PLOT DATE: 1/3/2015
PROJECT LEADER: R. HEBERT	DRAWN BY: D. BURHANS
DESIGNED BY: D. BURHANS	CHECKED BY: D. BRYANT
PHASED CONSTRUCTION LAYOUT SHEET - 8	SHEET 36 OF 154

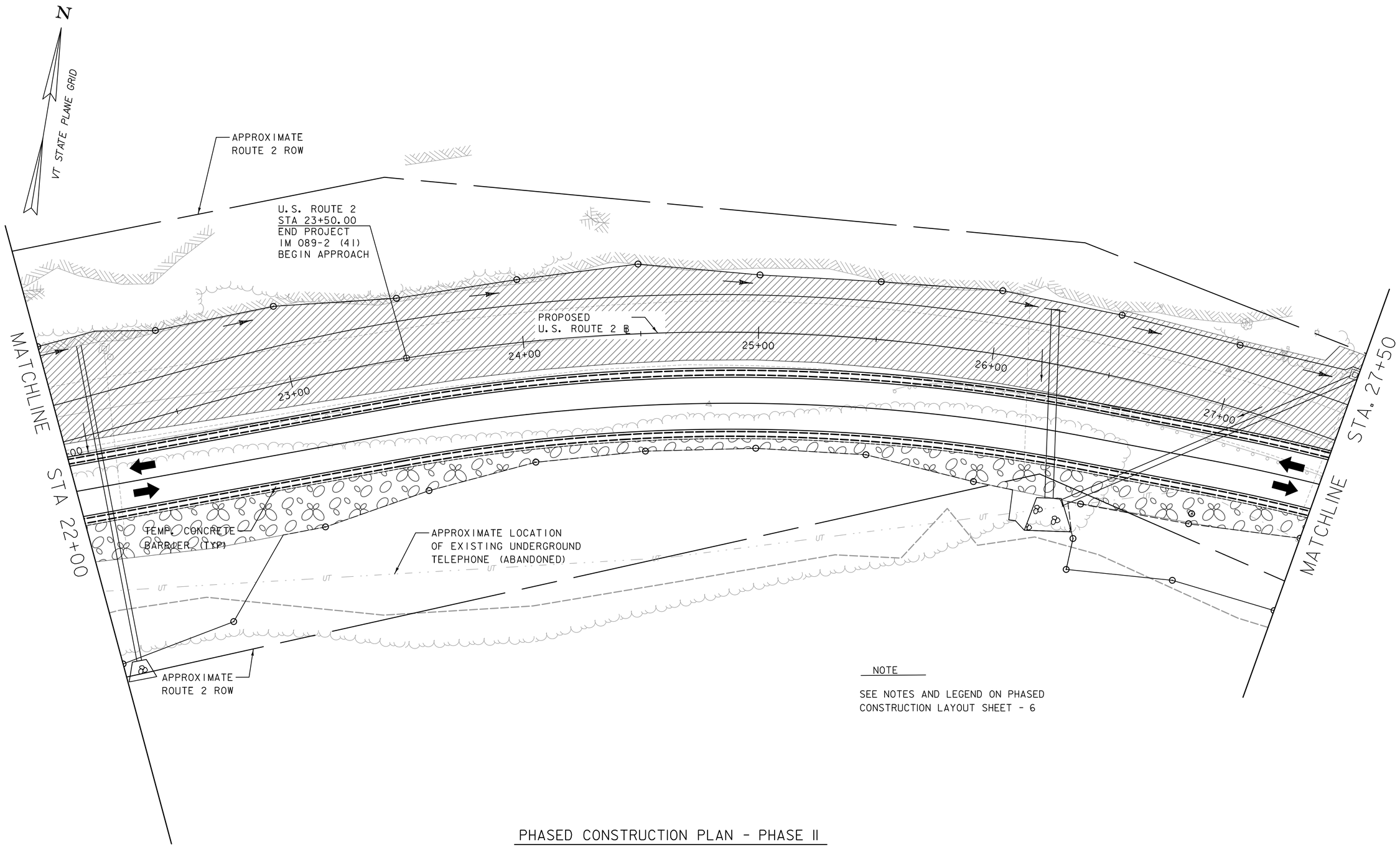

NOTE

SEE NOTES AND LEGEND ON PHASED CONSTRUCTION LAYOUT SHEET - 6

PHASED CONSTRUCTION PLAN - PHASE II

SCALE 1" = 20'-0"
20 0 20

PROJECT NAME: MIDDLESEX	
PROJECT NUMBER: IM 089-2(41)	
FILE NAME: z07a052mot_p2pl04.dgn	PLOT DATE: 1/3/2015
PROJECT LEADER: R. HEBERT	DRAWN BY: D. BURHANS
DESIGNED BY: D. BURHANS	CHECKED BY: D. BRYANT
PHASED CONSTRUCTION LAYOUT SHEET - 9	SHEET 37 OF 154

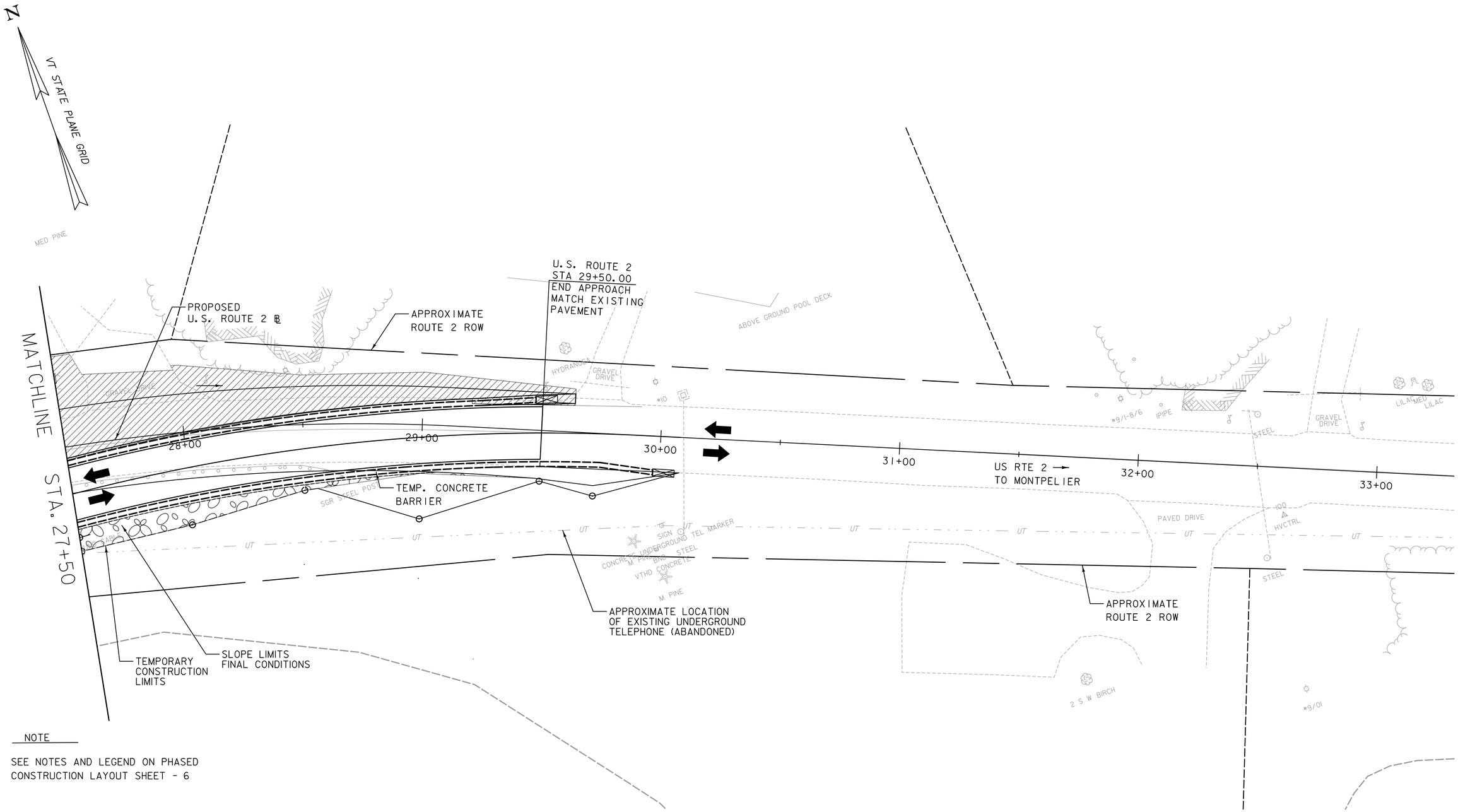

NOTE

SEE NOTES AND LEGEND ON PHASED CONSTRUCTION LAYOUT SHEET - 6

PHASED CONSTRUCTION PLAN- PHASE II

SCALE 1" = 20'-0"
20 0 20

PROJECT NAME: MIDDLESEX	
PROJECT NUMBER: IM 089-2(41)	
FILE NAME: z07a052mo1_p2p105.dgn	PLOT DATE: 1/3/2015
PROJECT LEADER: R. HEBERT	DRAWN BY: D. BURHANS
DESIGNED BY: D. BURHANS	CHECKED BY: D. BRYANT
PHASED CONSTRUCTION LAYOUT SHEET - 10	SHEET 38 OF 154

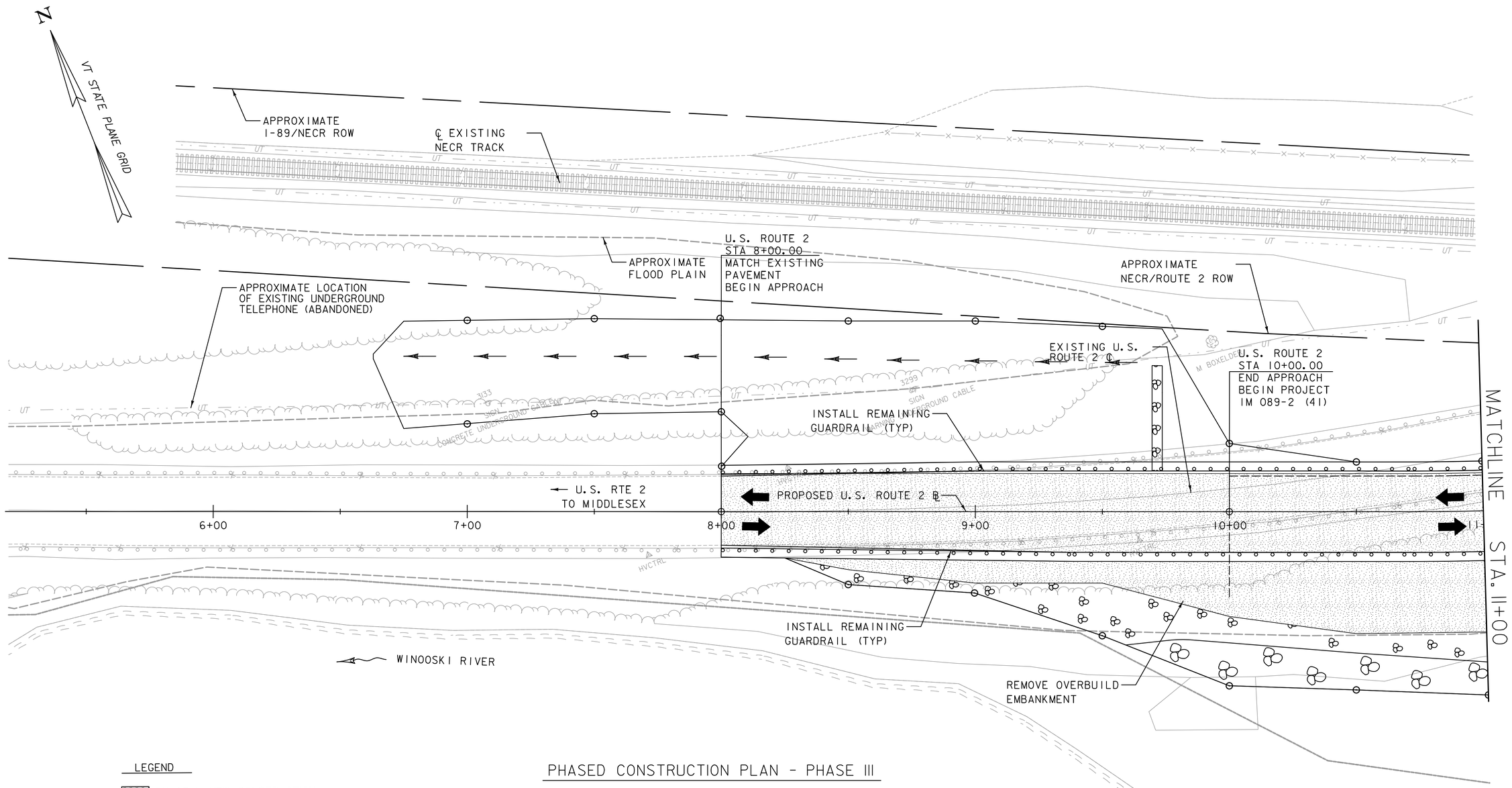

PHASED CONSTRUCTION PLAN - PHASE III

LEGEND

- PHASE I NEW CONSTRUCTION
- PHASE II NEW CONSTRUCTION
- PHASE III NEW CONSTRUCTION
- TRAFFIC FLOW
- TEMPORARY CONCRETE BARRIER
- TEMPORARY SHEETING AND BRACING
- ENERGY ABSORPTION ATTENUATOR

SUGGESTED SEQUENCE OF CONSTRUCTION ~ PHASE III

1. REMOVE TEMPORARY BARRIER, INSTALL REMAINING FINAL GUARD RAIL AND REMOVE TEMPORARY OVERBUILD USING TEMPORARY LANE CLOSURES.
2. REMOVE TEMPORARY ROADWAY WIDENING PAVEMENT, SOUTH OF FINAL ROADWAY LIMITS.
3. USING LIMITED LANE CLOSURES AND ONE WAY ALTERNATING TRAFFIC COMPLETE APPROACH PAVING (SHIM AND WEARING COURSE - STA. 8+00 TO STA. 12+00 AND STA. 26+50 TO STA. 31+00).

SCALE 1" = 20'-0"
20 0 20

PROJECT NAME: MIDDLESEX	
PROJECT NUMBER: IM 089-2(41)	
FILE NAME: z07a052mo+_p3p101.dgn	PLOT DATE: 1/3/2015
PROJECT LEADER: R. HEBERT	DRAWN BY: D. BURHANS
DESIGNED BY: D. BURHANS	CHECKED BY: D. BRYANT
PHASED CONSTRUCTION LAYOUT SHEET - II	SHEET 39 OF 154

N

VT STATE PLANE GRID

APPROXIMATE
I-89/NECR ROW

I-89 SB
TO MONTPELIER

APPROXIMATE
NECR/ROUTE 2 ROW

STA 13+82.75
BEGIN BRIDGE

EXISTING U.S.
ROUTE 2 ℄

PROPOSED
U.S. ROUTE 2 ℄

STA. 11+00

MATCHLINE

℄ EXISTING
NECR TRACK

℄ BRG.
PIER #1

MATCHLINE

STA. 16+50

12+00

13+00

14+00

15+00

16+00

INSTALL REMAINING
GUARDRAIL (TYP)

REMOVE OVERBUILD
EMBANKMENT

℄ BRG.
ABUT. #1

APPROXIMATE
ROUTE 2 ROW

NOTE

SEE NOTES AND LEGEND ON PHASED
CONSTRUCTION LAYOUT SHEET - 11

SCALE 1" = 20'-0"
20 0 20

PHASED CONSTRUCTION PLAN - PHASE III

PROJECT NAME: MIDDLESEX	
PROJECT NUMBER: IM 089-2(41)	
FILE NAME: z07a052mot_p3p102.dgn	PLOT DATE: 1/3/2015
PROJECT LEADER: R. HEBERT	DRAWN BY: D. BURHANS
DESIGNED BY: D. BURHANS	CHECKED BY: D. BRYANT
PHASED CONSTRUCTION LAYOUT SHEET - 12	SHEET 40 OF 154

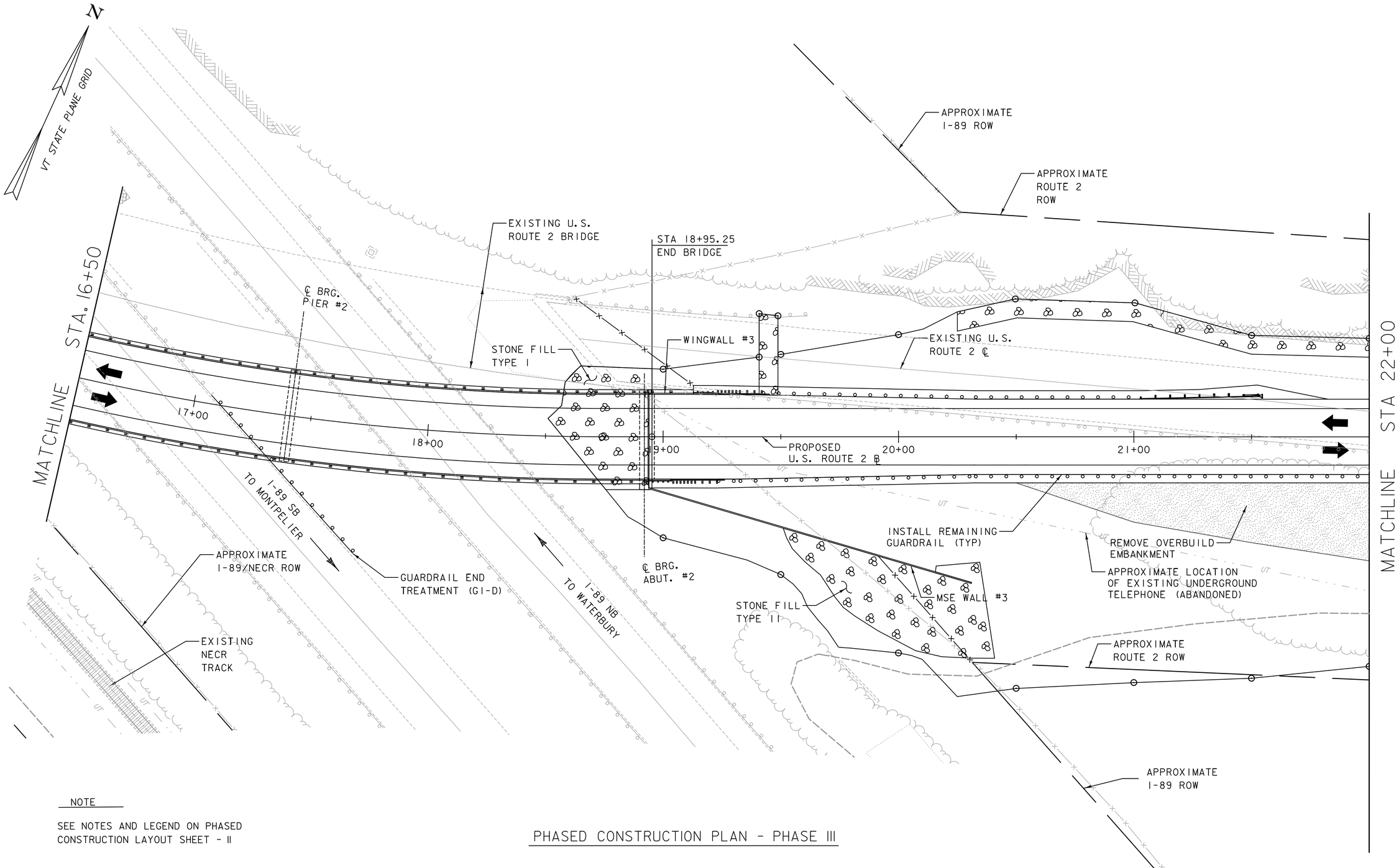

NOTE

SEE NOTES AND LEGEND ON PHASED CONSTRUCTION LAYOUT SHEET - 11

PHASED CONSTRUCTION PLAN - PHASE III

SCALE 1" = 20'-0"
20 0 20

PROJECT NAME:	MIDDLESEX
PROJECT NUMBER:	IM 089-2(41)

FILE NAME: z07a052mot_p3pl03.dgn	PLOT DATE: 1/3/2015
PROJECT LEADER: R. HEBERT	DRAWN BY: D. BURHANS
DESIGNED BY: D. BURHANS	CHECKED BY: D. BRYANT
PHASED CONSTRUCTION LAYOUT SHEET - 13	SHEET 41 OF 154

N

VT STATE PLANE GRID

APPROXIMATE
ROUTE 2 ROW

U.S. ROUTE 2
STA 23+50.00
END PROJECT
IM 089-2 (41)
BEGIN APPROACH

PROPOSED
U.S. ROUTE 2 ℄

INSTALL GUARDRAIL

23+00

24+00

25+00

26+00

27+00

MATCHLINE
STA 22+00

MATCHLINE
STA. 27+50

REMOVE OVERBUILD
EMBANKMENT

APPROXIMATE LOCATION
OF EXISTING UNDERGROUND
TELEPHONE (ABANDONED)

UT

APPROXIMATE
ROUTE 2 ROW

NOTE

SEE NOTES AND LEGEND ON PHASED
CONSTRUCTION LAYOUT SHEET - 11

PHASED CONSTRUCTION PLAN - PHASE III

SCALE 1" = 20'-0"
20 0 20

PROJECT NAME: MIDDLESEX	
PROJECT NUMBER: IM 089-2(41)	
FILE NAME: z07a052mot_p3pl04.dgn	PLOT DATE: 1/3/2015
PROJECT LEADER: R. HEBERT	DRAWN BY: D. BURHANS
DESIGNED BY: D. BURHANS	CHECKED BY: D. BRYANT
PHASED CONSTRUCTION LAYOUT SHEET - 14	SHEET 42 OF 154

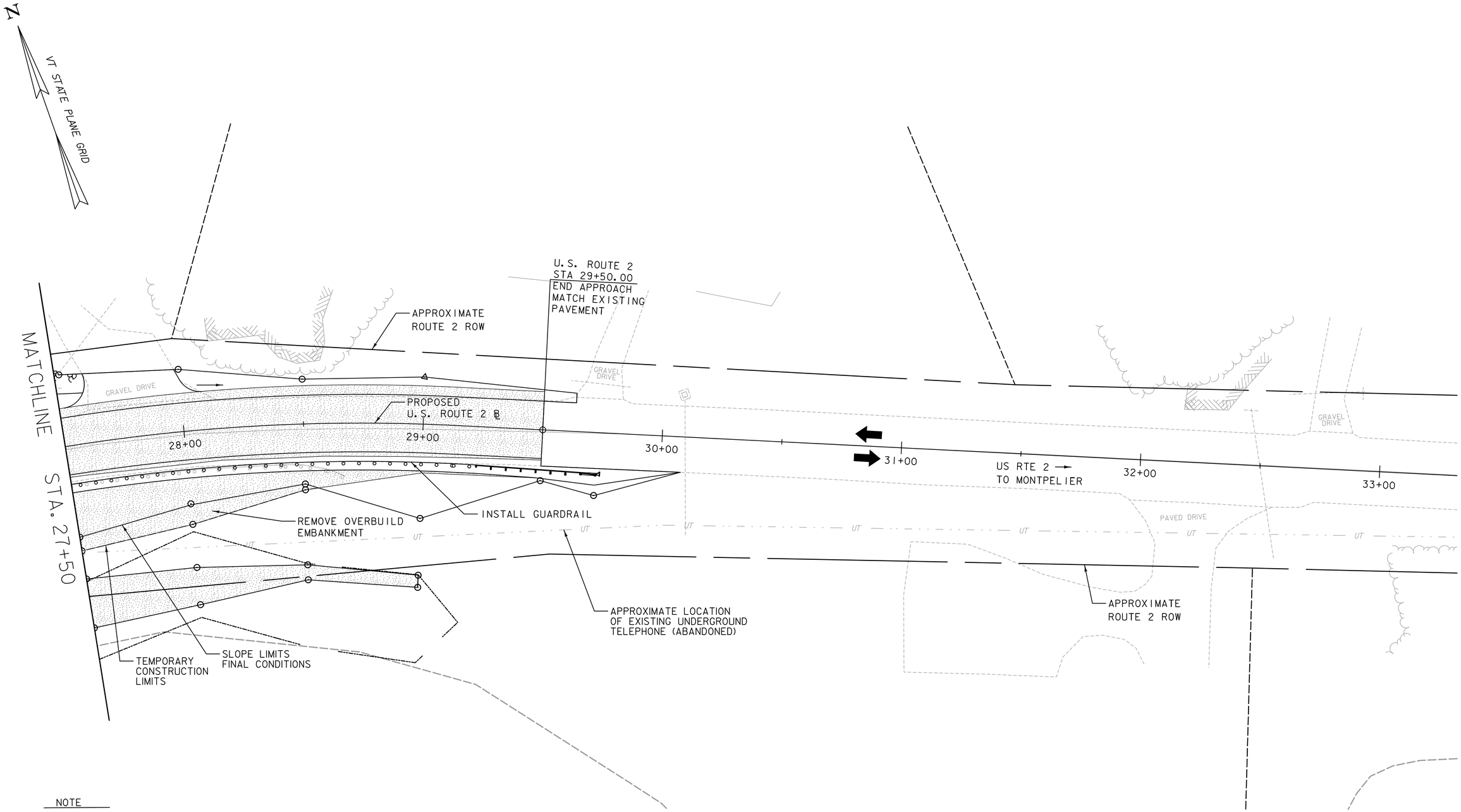

NOTE

SEE NOTES AND LEGEND ON PHASED CONSTRUCTION LAYOUT SHEET - II

PHASED CONSTRUCTION PLAN - PHASE III

SCALE 1" = 20'-0"
20 0 20

PROJECT NAME: MIDDLESEX	
PROJECT NUMBER: IM 089-2(41)	
FILE NAME: z07a052mot_p3p105.dgn	PLOT DATE: 1/3/2015
PROJECT LEADER: R. HEBERT	DRAWN BY: D. BURHANS
DESIGNED BY: D. BURHANS	CHECKED BY: D. BRYANT
PHASED CONSTRUCTION LAYOUT SHEET - 15	SHEET 43 OF 154

STATE OF VERMONT
AGENCY OF TRANSPORTATION

TRAFFIC SIGN SUMMARY SHEET

MILEMARKER, STATION, OR SIGN NUMBER	SIGN LEGEND	SIGN DIMENSIONS EA	SIGN DIMENSIONS WIDTH (in)	SIGN DIMENSIONS HEIGHT (in)	NEW & SALVAGED SIGNS "A"	"B"	SALV SIGN	SALV TIS	EXIST POST RETAIN	EXIST POST SALVAGE	NO. OF POSTS	FLANGED CHANNEL lb/ft 1.12	FLANGED CHANNEL 2.0	FLANGED CHANNEL 3.0	SQUARE STEEL (in) 1.75 (lb/ft 1.88)	SQUARE STEEL 2.0 (lb/ft 2.42)	SQUARE STEEL 2.5 (lb/ft 3.35)	ANCHOR	SLEEVE	TUBULAR ALUMINUM Ø (in) 3.0 (lb/ft 1.3)	TUBULAR ALUMINUM 4.0 (lb/ft 1.7)	TUBULAR ALUMINUM 4.0 MOD (lb/ft 1.7)	FOUNDATION	TUBULAR STEEL Ø (in) 3.0 (lb/ft 7.6)	TUBULAR STEEL 3.5 (lb/ft 9.0)	TUBULAR STEEL 4.0 (lb/ft 10.8)	TUBULAR STEEL 5.0 (lb/ft 14.6)	W-SHAPE STEEL FTG. SIZE 24"	W-SHAPE STEEL FTG. SIZE 30"	W-SHAPE STEEL WEIGHT	W-SHAPE STEEL POST SIZE	SIGN FRAME REQUIRED	REMARKS	SIGN DETAIL: DETAIL ON SHEET NUMBER	SIGN DETAIL: STD. SHEET NUMBER
												OPTION ITEMS																							
13+50, RT 19+50, LT	BRIDGE 55 U.S. 2	2	6	8	0.66						2					"X"		2															VD-701		E-134
13+50, RT		1	24	24	4.00						1					"X"		1															M1-4		E-136A
					16.66							FT	FT	FT	FT	FT	FT		EA	LB	LB	LB		LB	LB	LB	LB								
	TOTALS				SF 16.66	SF	EA.	SF				FT			FT					LB			EA.	LB				EA.	EA.	LB					

FINAL POST LENGTHS ARE TO BE DETERMINED IN THE FIELD. POST SIZES ARE COMPUTED BASED ON INFORMATION FURNISHED ON THE STANDARD SHEETS AND THE VTRANS "SIGN POST DESIGN GUIDELINE."

PROJECT NAME: MIDDLESEX
PROJECT NUMBER: IM 089-2(41)

FILE NAME: z07a052bdr_SS.dgn
PROJECT LEADER: R. HEBERT
DESIGNED BY: D. BURHANS
TRAFFIC SIGN SUMMARY SHEET

PLOT DATE: 1/3/2015
DRAWN BY: J. DAVIS
CHECKED BY: D. BRYANT
SHEET 44 OF 154

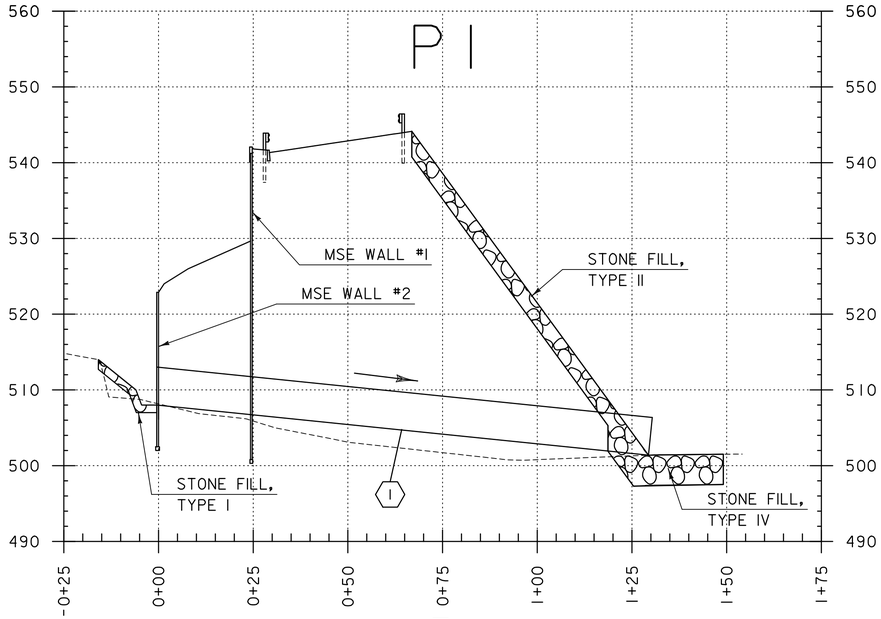

1
SLOPE = -5.11%
NEW PIPE
TYPE: RCP PIPE
LENGTH = 131.50'
DIAMETER = 60"
INV. IN = 508.00
INV. OUT = 501.39

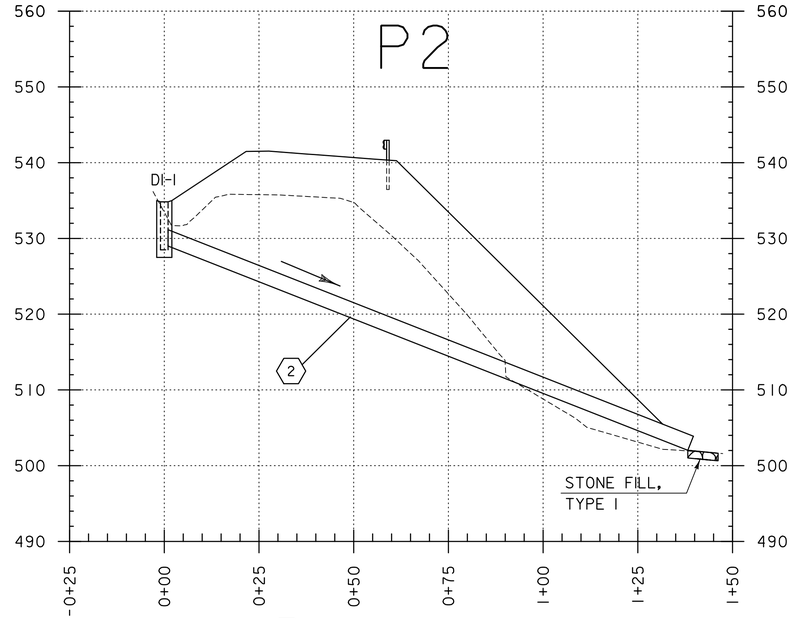

2
SLOPE = -19.84%
NEW PIPE
TYPE: OPTION AA PIPE
LENGTH = 149.00'
DIAMETER = 24"
INV. IN = 529.00
INV. OUT = 502.03

DI-1
GRATE: TYPE B
RIM EL. = 534.83
DEPTH = 7'-5"

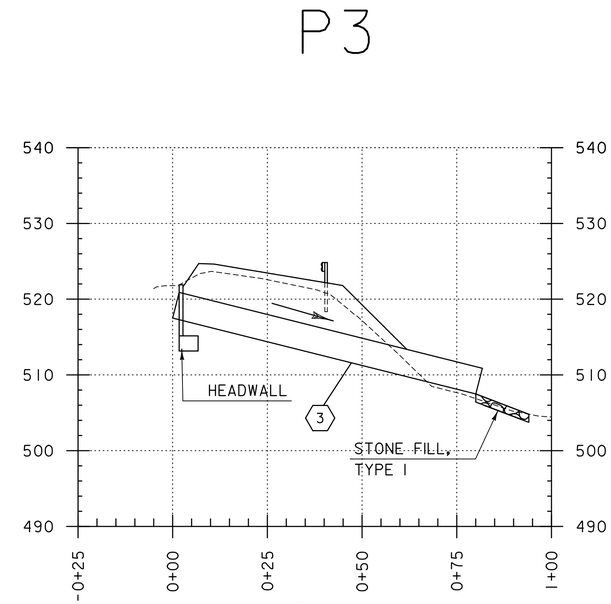

3
SLOPE = -12.51%
NEW PIPE
TYPE: OPTION BB PIPE
LENGTH = 82.50'
DIAMETER = 42"
INV. IN = 517.50
INV. OUT = 507.49

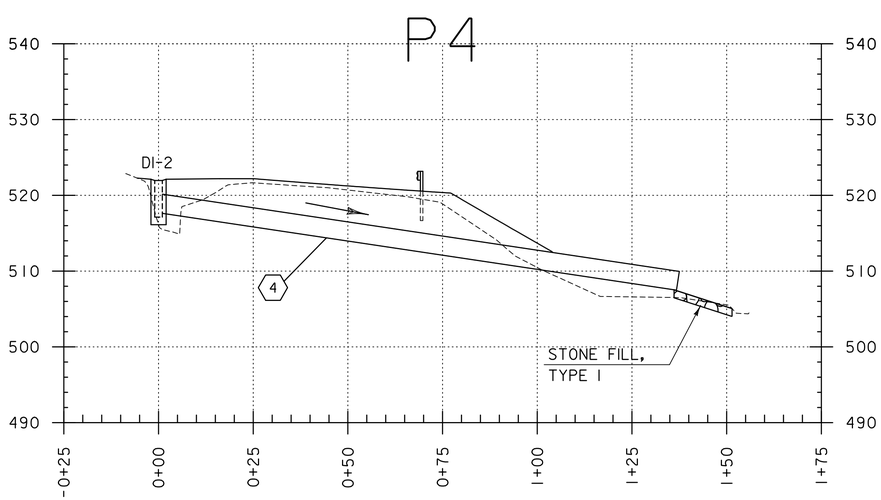

4
SLOPE = -7.47%
NEW PIPE
TYPE: OPTION AA PIPE
LENGTH = 138.00'
DIAMETER = 30"
INV. IN = 517.63
INV. OUT = 507.49

DI-2
GRATE: TYPE B
RIM EL. = 521.96
DEPTH = 6'-0"

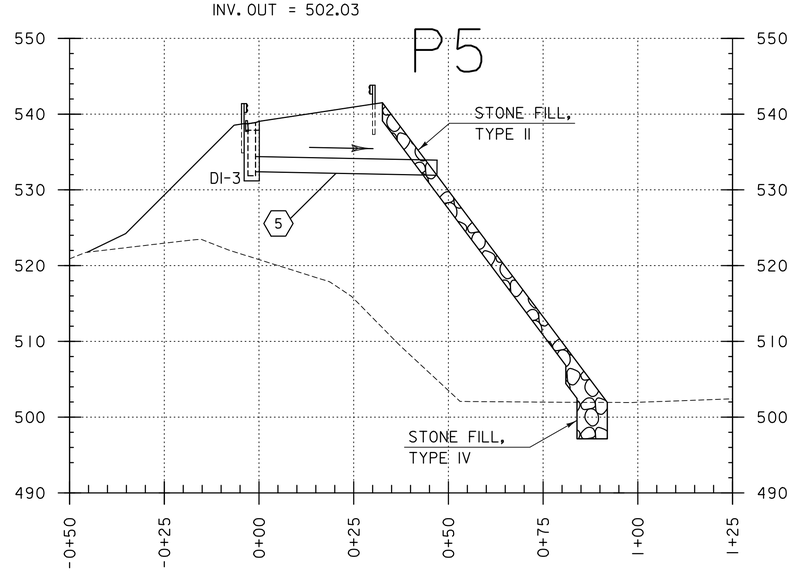

5
SLOPE = -1.00%
NEW PIPE
TYPE: OPTION AA PIPE
LENGTH = 48.00'
DIAMETER = 24"
INV. IN = 531.15
INV. OUT = 530.67

DI-3
GRATE: TYPE E
RIM EL. = 538.75
DEPTH = 7'-6"

NOTE:

AN ESTIMATED QUANTITY OF ITEM 619.17 YIELDING MARKER POSTS HAS BEEN INCLUDED TO DELINEATE PIPE OUTLETS AND DROP INLETS OUTSIDE THE PAVEMENT SURFACE OR AS DIRECTED BY THE ENGINEER.

SCALES:
HORIZ: 1"= 40'
VERT: 1"= 20'

PROJECT NAME: MIDDLESEX	
PROJECT NUMBER: IM 089-2(41)	
FILE NAME: z07a052bdr_pipe_pr01.dgn	PLOT DATE: 1/3/2015
PROJECT LEADER: R. HEBERT	DRAWN BY: P. MCCLURE
DESIGNED BY: D. BRYANT	CHECKED BY: D. BRYANT
PIPE PROFILE SHEET - 1	SHEET 45 OF 154

SOIL CLASSIFICATION

AASHTO	
A1	Gravel and Sand
A3	Fine Sand
A2	Silty or Clayey Gravel and Sand
A4	Silty Soil - Low Compressibility
A5	Silty Soil - Highly Compressible
A6	Clayey Soil - Low Compressibility
A7	Clayey Soil - Highly Compressible

ROCK QUALITY DESIGNATION

R.Q.D. (%)	ROCK DESCRIPTION
<25	Very Poor
25 to 50	Poor
51 to 75	Fair
76 to 90	Good
>90	Excellent

SHEAR STRENGTH

UNDRAINED SHEAR STRENGTH IN P.S.F.	CONSISTENCY
<250	Very Soft
250-500	Soft
500-1000	Med. Stiff
1000-2000	Stiff
2000-4000	Very Stiff
>4000	Hard

CORRELATION GUIDE OF "N" TO DENSITY/CONSISTENCY

DENSITY (GRANULAR SOILS)		CONSISTENCY (COHESIVE SOILS)	
N	DESCRIPTIVE TERM	N	DESCRIPTIVE TERM
<5	Very Loose	<2	Very Soft
5-10	Loose	2-4	Soft
11-24	Med. Dense	5-8	Med. Stiff
25-50	Dense	9-15	Stiff
>50	Very Dense	16-30	Very Stiff
		31-60	Hard
		>60	Very Hard

COMMONLY USED SYMBOLS

▼	Water Elevation
⊗	Standard Penetration Boring
⊕	Auger Boring
⊙	Rod Sounding
S	Sample
N	Standard Penetration Test Blow Count Per Foot For: 2" O.D. Sampler 1 3/8" I.D. Sampler Hammer Weight Of 140 Lbs. Hammer Fall Of 30"
VS	Field Vane Shear Test
US	Undisturbed Soil Sample
B	Blast
DC	Diamond Core
MD	Mud Drill
WA	Wash Ahead
HSA	Hollow Stem Auger
AX	Core Size 1 1/8"
BX	Core Size 1 5/8"
NX	Core Size 2 1/8"
M	Double Tube Core Barrel Used
LL	Liquid Limit
PL	Plastic Limit
PI	Plasticity Index
NP	Non Plastic
w	Moisture Content (Dry Wgt. Basis)
D	Dry
M	Moist
MTW	Moist To Wet
W	Wet
Sat	Saturated
Bo	Boulder
Gr	Gravel
Sa	Sand
Si	Silt
Cl	Clay
HP	Hardpan
Le	Ledge
NLTD	No Ledge To Depth
CNPF	Can Not Penetrate Further
TLOB	To Ledge Or Boulder
NR	No Recovery
Rec.	Recovery
%Rec.	Percent Recovery
RQD	Rock Quality Designation
CBR	California Bearing Ratio
<	Less Than
>	Greater Than
R	Refusal (N > 100)
NQ	Rock Core size Designation

COLOR

blk	Black	pnk	Pink
bl	Blue	pu	Purple
brn	Brown	rd	Red
dk	Dark	tn	Tan
gry	Gray	wh	White
gn	Green	yel	Yellow
lt	Light	mltc	Multicolored
or	Orange		

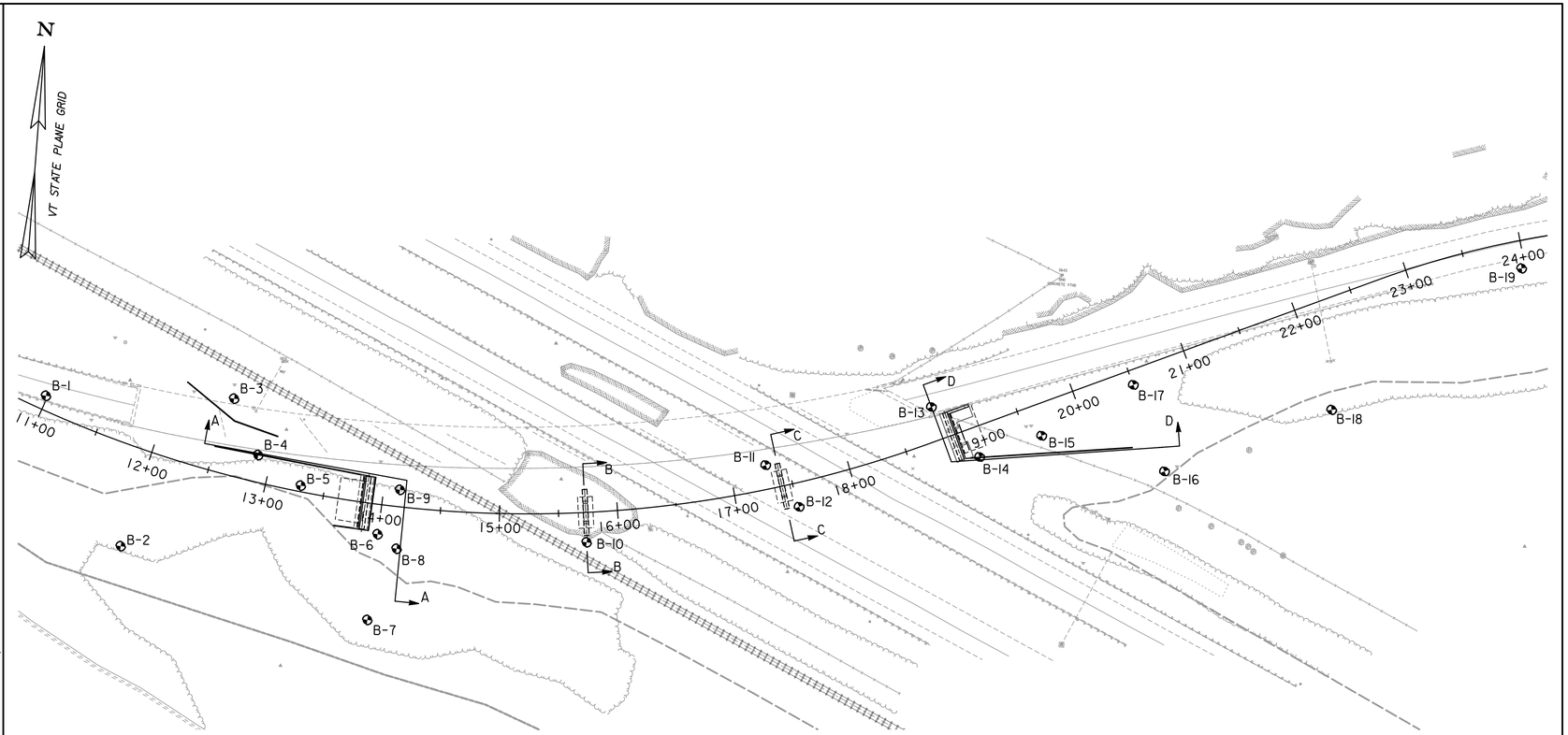

BORING LAYOUT

SCALE 1" = 60'-0"

BORING LAYOUT

HOLE NO.	STATION	OFFSET	NORTHING	EASTING	GROUND ELEVATION	TLOB
B-1	10+98.48	11.83 LT.	647273.00	1601045.00	534.0	512.2
B-2	12+00.34	83.63 RT.	647151.00	1601118.00	502.0	470.5
B-3	12+55.19	63.91 LT.	647283.00	1601204.00	514.0	512.5
B-4	12+88.23	22.77 LT.	647237.00	1601228.00	510.5	507.0
B-5	13+29.60	5.17 LT.	647214.00	1601266.00	507.0	465.1
B-6	13+99.61	25.20 RT.	647178.00	1601334.00	508.5	485.2
B-7	13+99.97	98.26 RT.	647105.00	1601331.00	500.0	479.1
B-8	14+16.51	35.55 RT.	647167.00	1601351.00	508.0	496.5
B-9	14+14.00	14.40 LT.	647217.00	1601350.00	514.0	478.5
B-10	15+72.61	25.30 RT.	647185.00	1601511.00	514.0	490.9
B-11	17.31.04	20.38 LT.	647262.00	1601657.00	527.0	477.0
B-12	17.51.10	20.21 RT.	647229.00	1601688.00	526.0	504.5
B-13	18+83.06	28.51 LT.	647322.00	1601793.00	548.0	524.0
B-14	19+06.90	25.24 RT.	647283.00	1601837.00	528.5	505.5
B-15	19+62.43	26.39 RT.	647305.00	1601888.00	532.0	498.0
B-16	20+49.73	90.41 RT.	647283.00	1601994.00	507.5	493.5
B-17	20+50.10	12.54 RT.	647354.00	1601962.00	536.5	502.5
B-18	22+00.53	89.98 RT.	647346.00	1602131.00	503.0	489.2
B-19	23+96.81	23.54 RT.	647478.00	1602282.00	526.5	515.0

GENERAL NOTES

1. The subsurface explorations shown herein were made between September 26, 2011 and October 13, 2011 by S.W. Cole Engineering, Inc.
2. Soil and rock classifications, properties and descriptions are based on engineering interpretation from available subsurface information by S.W. Cole Engineering, Inc. and may not necessarily reflect actual variations in subsurface conditions that may be encountered between individual boring or sample locations.
3. Observed water levels and/or conditions indicated are as recorded at the time of exploration and may vary according to the prevailing rainfall, methods of exploration and other factors.
4. Engineering judgement was exercised in preparing the subsurface information presented herein. Analysis and interpretation of subsurface data was performed and interpreted for Agency design and estimating purposes. Presentation of the information in the Contract is intended to provide the Contractor access to the same data available to the Agency. The subsurface information is presented in good faith and is not intended as a substitute for personal investigation, independent interpretation, independent analysis or judgement by the Contractor.
5. Pictorial structure details shown on the boring plan layout or soils profile are for illustrative purposes only and may not accurately portray final contract details.
6. Terminology used on boring logs to describe the hardness, degree of weathering, and spacing of fractures, joints and other discontinuities in the bedrock is defined in the AASHTO Manual on Subsurface Investigations, 1988.

DEFINITIONS (AASHTO)

BEDROCK (LEDGE) - Rock in its native location of indefinite thickness.

BOULDER - A rock fragment with an average dimension > 12 inches.

COBBLE - Rock fragments with an average dimension between 3 and 12 inches.

GRAVEL - Rounded particles of rock < 3" and > 0.0787" (#10 sieve).

SAND - Particles of rock < 0.0787" (#10 sieve) and > 0.0029" (#200 sieve).

SILT - Soil < 0.0029" (#200 sieve), non or slightly plastic and exhibits no strength when air-dried.

CLAY - Fine grained soil, exhibits plasticity when moist and considerable strength when air-dried.

VARVED - Alternate layers of silt and clay.

HARDPAN - Extremely dense soil, cemented layer, not softened when wet.

MUCK - Soft organic soil (containing > 10% organic material.

MOISTURE CONTENT - Weight of water divided by dry weight of soil.

FLOWING SAND - Granular soil so saturated (loose) that it flows into drill casing during extraction of wash rod.

STRIKE - Angle from magnetic north to line of intersection of bed with a horizontal plane.

DIP - Inclination of bed with a horizontal plane.

PROJECT NAME: MIDDLESEX
PROJECT NUMBER: IM 089-2(41)

FILE NAME: z07a052bdrborplan.dgn
PROJECT LEADER: R. HEBERT
DESIGNED BY: J. OLUND
BORING INFORMATION & LAYOUT SHEET

PLOT DATE: 1/3/2015
DRAWN BY: S. MORGAN
CHECKED BY: R. HEBERT
SHEET 46 OF 154

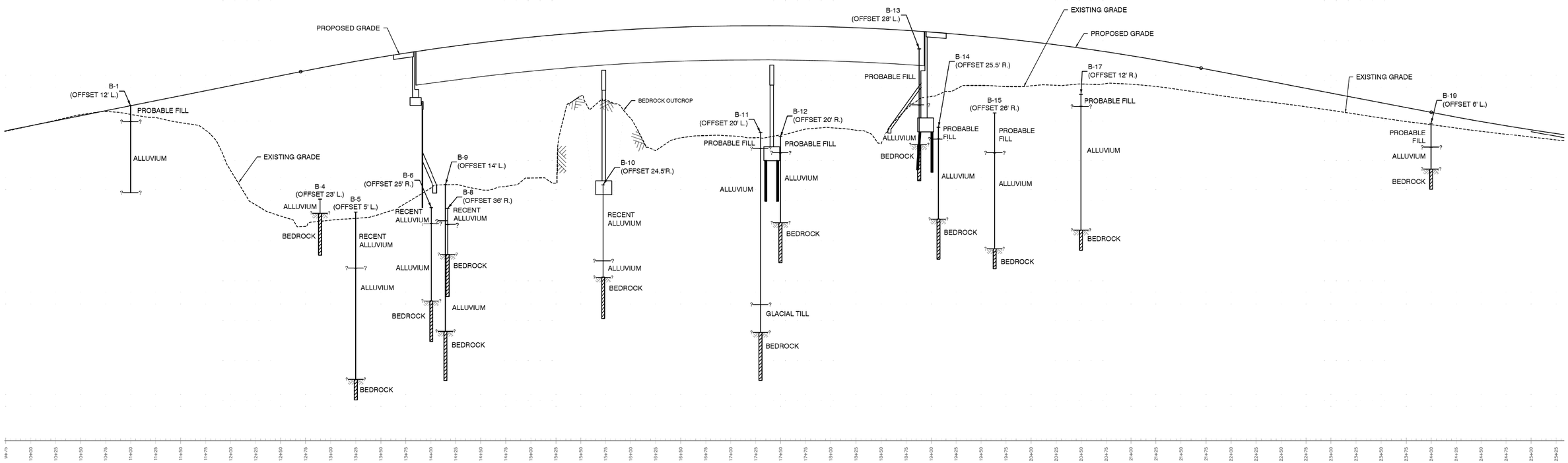

INTERPRETIVE SOIL PROFILE

NOT TO SCALE

LEGEND:

B-5 (OFFSET 5' R.)	BORING AND OFFSET FROM PROPOSED CENTERLINE
	EXISTING GROUND SURFACE
SAND	STRATA DEFINITION
? — ?	STRATA CHANGE
? ?	BEDROCK SURFACE
	ROCK CORE

NOTES:

1. EXISTING GRADE AND PROPOSED GRADES AS SHOWN ARE ALONG THE PROPOSED ALIGNMENT AND TAKEN FROM A 1"=20' HORIZONTAL, 1"=5' VERTICAL SCALE PROFILE PROVIDED BY T.Y. LIN INTERNATIONAL, ENTITLED "PROFILE - U.S. ROUTE 2", RECEIVED VIA E-MAIL MARCH 24, 2014.

2. THE DEPTH AND THICKNESS OF THE SUBSURFACE STRATA INDICATED ON THIS PROFILE WERE GENERALIZED FROM AND INTERPOLATED BETWEEN TEST BORING LOCATIONS AND MAY NOT INDICATE ACTUAL STRATA ALONG THE PROPOSED CENTERLINE. THE TRANSITION BETWEEN MATERIALS MAY BE MORE OR LESS GRADUAL THAN INDICATED. INFORMATION ON ACTUAL SUBSURFACE CONDITIONS EXISTS ONLY AT THE SPECIFIC LOCATIONS INDICATED AND AT THE TIME OF EXPLORATION. REFER TO THE TEST BORING LOGS FOR DETAILED DESCRIPTIONS OF SOIL AND BEDROCK STRATA AS ENCOUNTERED AT THE TEST BORING LOCATION.

PROJECT NAME: MIDDLESEX
PROJECT NUMBER: IM 089-2(41)

FILE NAME: z07a052bdrswcolepro.dgn
PROJECT LEADER: R. HEBERT
DESIGNED BY: CHAD B. MICHAUD, PE
INTERPRETIVE SOIL PROFILE

PLOT DATE: 1/3/2015
DRAWN BY: CARL E. MORRISON
CHECKED BY: NATHAN B. SEGUIN
SHEET 47 OF 154

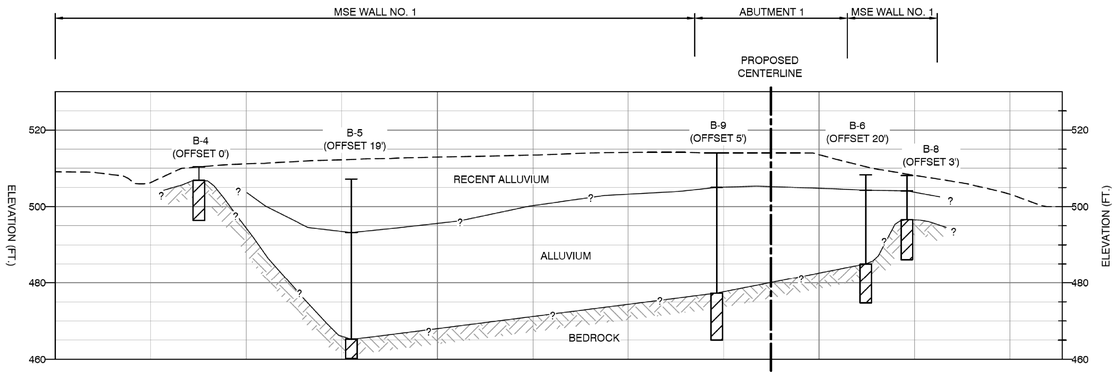

SECTION A

SCALE: 1"=20'

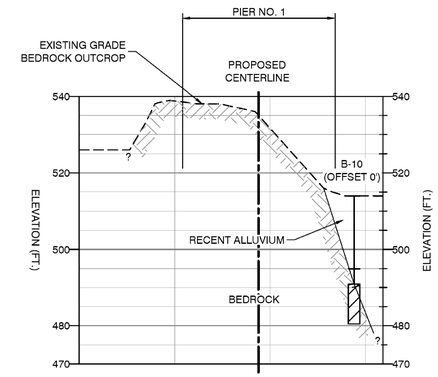

SECTION B

SCALE: 1"=20'

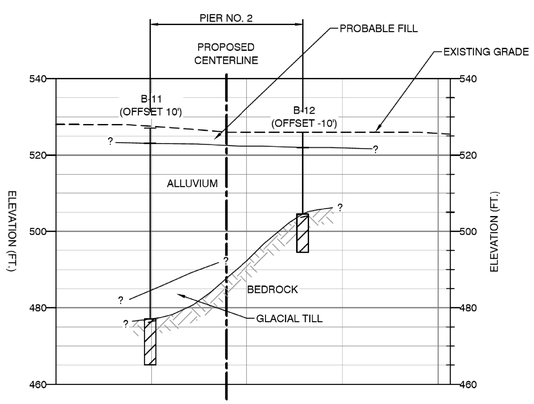

SECTION C

SCALE: 1"=20'

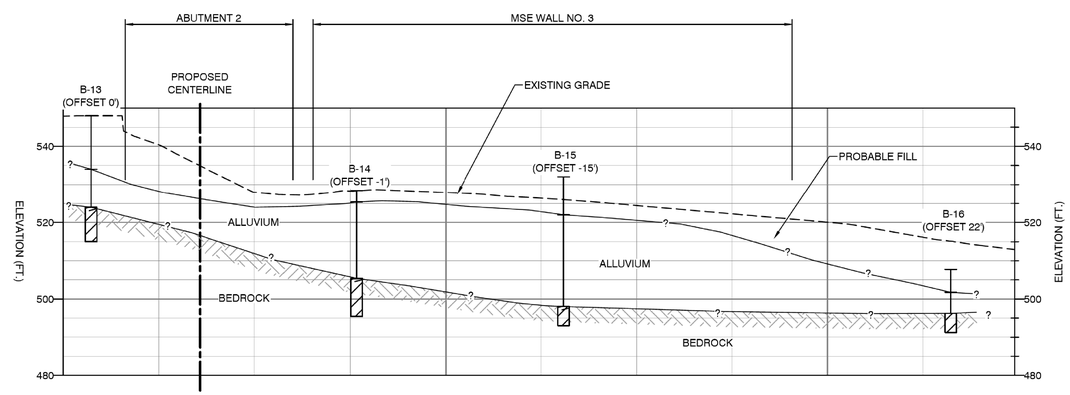

SECTION D

SCALE: 1"=20'

LEGEND:

B-5 (OFFSET -5')	BORING AND OFFSET FROM PROPOSED CENTERLINE
	EXISTING GROUND SURFACE
SAND	STRATA DEFINITION
	STRATA CHANGE
	INTERPRETIVE BEDROCK SURFACE
	ROCK CORE

NOTES:

1. THE DEPTH AND THICKNESS OF THE SUBSURFACE STRATA INDICATED ON THESE SECTIONS WERE GENERALIZED FROM AND INTERPOLATED BETWEEN TEST BORING LOCATIONS. THE TRANSITION BETWEEN MATERIALS MAY BE MORE OR LESS GRADUAL THAN INDICATED. INFORMATION ON ACTUAL SUBSURFACE CONDITIONS EXISTS ONLY AT THE SPECIFIC LOCATIONS INDICATED AND AT THE TIME OF EXPLORATION. REFER TO THE TEST BORING LOGS FOR DETAILED DESCRIPTIONS OF SOIL AND BEDROCK STRATA AS ENCOUNTERED AT THE TEST BORING LOCATION.

PROJECT NAME: MIDDLESEX
PROJECT NUMBER: IM 089-2(41)

FILE NAME: z07a052bdrswcolesec.dgn
PROJECT LEADER: R. HEBERT
DESIGNED BY: CHAD B. MICHAUD, PE
INTERPRETIVE SOIL SECTIONS

PLOT DATE: 1/3/2015
DRAWN BY: CARL E. MORRISON
CHECKED BY: NATHAN B. SEGUIN
SHEET 48 OF 154

S.W. COLE ENGINEERING, INC.

BORING LOG

Middlesex Bridge Replacement Project
IM 089-2(41)
U.S. Route 2 and Interstate 89

Boring No.: B- 1
Page No.: 1 of 1
SWCE Job No.: 11-0904
Checked By: CBM

Boring Crew: Nate Seguin (SWCE), Tony Martinelli (CDS)
Date Started: 10/11/11 Date Finished: 10/11/11
VTSPG NAD83: N 647273.00 ft E 1601045.00 ft
Station: Offset:
Ground Elevation: 534.0 ft

	Casing	Sampler
Type:	HW	SS
I.D.:	4 in	2.35 in
Hammer Wt:	N.A.	140 lb.
Hammer Fall:	N.A.	30 in.
Hammer/Rod Type:	Auto/AWJ	
Rig:	CME 55 TRACK	

Groundwater Observations

Date	Depth (ft)	Notes
10/12/11		No free water obs

Depth (ft)	Strata (1)	CLASSIFICATION OF MATERIALS (Description)	Blows/6" (N Value)	Moisture Content %	Gravel %	Sand %	Fines %
		ASPHALT, 0.0 ft – 0.5 ft					
		A-1-b, Gray-Brown silty GRAVEL and SAND, Rec. = 1.2 ft	13-18-17-16 (35)	2.0	52.0	31.2	16.8
		A-2, Brown silty fine SAND, (PROBABLE FILL)					
5		Rec. = 1.3 ft	7-9-10-11 (19)				
10		Rec. = 0.3 ft	7-8-8-9 (16)				
15		Rec. = 1.3 ft	3-6-7-6 (13)	17.3			
20		Rec. = 0.5 ft	11-12-15-50-3" (27)				
		Hole stopped @ 21.8 ft Roller Cone Refusal					
25							
30							

Notes:
1. Stratification lines represent approximate boundary between material types. Transition may be gradual.
2. N Values have not been corrected for hammer energy.
3. Water level readings have been made at times and under conditions stated. Fluctuations of groundwater may occur due to other factors than those present at the time measurements were made.

PROJECT NAME: MIDDLESEX
PROJECT NUMBER: IM 089-2(41)

FILE NAME: z07a052bdrborlog.dgn
PROJECT LEADER: R. HEBERT
DESIGNED BY: S.W. COLE - CBM
BORING LOG - 1

PLOT DATE: 1/3/2015
DRAWN BY: S. MORGAN
CHECKED BY: J. OLUND
SHEET 49 OF 154

S.W. COLE ENGINEERING, INC.

BORING LOG

Middlesex Bridge Replacement Project
IM 089-2(41)
U.S. Route 2 and Interstate 89

Boring No.: B- 2
Page No.: 1 of 2
SWCE Job No.: 11-0904
Checked By: CBM

Boring Crew: Nate Seguin (SWCE), Tony Martinelli (CDS)
Date Started: 9/29/11 Date Finished: 9/29/11
VTSPG NAD83: N 647151.00 ft E 1601118.00 ft
Station: Offset:
Ground Elevation: 502.0 ft

	Casing	Sampler
Type:	HW	SS
I.D.:	4 in	2.35 in
Hammer Wt:	N.A.	140 lb.
Hammer Fall:	N.A.	30 in.

Hammer/Rod Type: Auto/AWJ
Rig: CME 55 TRACK

Groundwater Observations		
Date	Depth (ft)	Notes
09/29/11		No free water obs

Depth (ft)	Strata (1)	CLASSIFICATION OF MATERIALS (Description)	Run (Dip deg.)	Core Rec. % (RQD %)	Blows/6" (N Value)	Moisture Content %	Gravel %	Sand %	Fines %
		A-2, Brown silty fine SAND with trace wood fragments and organics, Rec. = 0.8 ft			1-2-1-2 (3)				
		A-2, Brown silty fine SAND with trace medium sand and organics							
5		Organic content = 1.8%, Rec. = 0.8 ft, 5.0 ft			2-3-3-2 (6)	22.5			
10		Rec. = 1.5 ft			2-4-9-7 (13)				
		A-1-b, Brown GRAVEL and SAND with some silt							
15		Rec. = 0.7 ft			8-8-7-6 (15)	11.9			
20		Rec. = 0.3 ft			12-9-13-14 (22)	10.2	63.0	28.7	8.3
		A-2/A-3, Brown fine SAND with some silt							
25		Rec. = 0.8 ft			4-6-4-5 (10)				
30		Rec. = 1.5 ft			11-10-10-15 (20)				
		Top of Bedrock @ 31.5 ft							
		31.5 ft - 37.0 ft, Light gray, Quartzite, fine grained, fresh, slightly fractured, massive, hard, fractures @ 0-80 degrees from horizontal. Slightly weathered, Poor rock, Transitioning to coarse-grained at 35.5' NQ	1R	98 (93)					

Notes:
1. Stratification lines represent approximate boundary between material types. Transition may be gradual.
2. N Values have not been corrected for hammer energy.
3. Water level readings have been made at times and under conditions stated. Fluctuations of groundwater may occur due to other factors than those present at the time measurements were made.

S.W. COLE ENGINEERING, INC.

BORING LOG

Middlesex Bridge Replacement Project
IM 089-2(41)
U.S. Route 2 and Interstate 89

Boring No.: B- 2
Page No.: 2 of 2
SWCE Job No.: 11-0904
Checked By: CBM

Boring Crew: Nate Seguin (SWCE), Tony Martinelli (CDS)
Date Started: 9/29/11 Date Finished: 9/29/11
VTSPG NAD83: N 647151.00 ft E 1601118.00 ft
Station: Offset:
Ground Elevation: 502.0 ft

	Casing	Sampler
Type:	HW	SS
I.D.:	4 in	2.35 in
Hammer Wt:	N.A.	140 lb.
Hammer Fall:	N.A.	30 in.

Hammer/Rod Type: Auto/AWJ
Rig: CME 55 TRACK

Groundwater Observations		
Date	Depth (ft)	Notes
09/29/11		No free water obs

Depth (ft)	Strata (1)	CLASSIFICATION OF MATERIALS (Description)	Run (Dip deg.)	Core Rec. % (RQD %)	Blows/6" (N Value)	Moisture Content %	Gravel %	Sand %	Fines %
		Hole stopped @ 37.0 ft							
40									
45									
50									
55									
60									
65									

Notes:
1. Stratification lines represent approximate boundary between material types. Transition may be gradual.
2. N Values have not been corrected for hammer energy.
3. Water level readings have been made at times and under conditions stated. Fluctuations of groundwater may occur due to other factors than those present at the time measurements were made.

PROJECT NAME: MIDDLESEX
PROJECT NUMBER: IM 089-2(41)

FILE NAME: z07a052bdrborlog.dgn
PROJECT LEADER: R. HEBERT
DESIGNED BY: S.W. COLE - CBM
BORING LOG - 2

PLOT DATE: 1/3/2015
DRAWN BY: S. MORGAN
CHECKED BY: J. OLUND
SHEET 50 OF 154

S.W. COLE ENGINEERING, INC.

BORING LOG

Middlesex Bridge Replacement Project
IM 089-2(41)
U.S. Route 2 and Interstate 89

Boring No.: B- 3
Page No.: 1 of 1
SWCE Job No.: 11-0904
Checked By: CBM

Boring Crew: Nate Seguin (SWCE), Tony Martinelli (CDS)
Date Started: 9/26/11 Date Finished: 9/26/11
VTSPG NAD83: N 647283.00 ft E 1601204.00 ft
Station: Offset:
Ground Elevation: 514.0 ft

	Casing	Sampler
Type:	HW	SS
I.D.:	4 in	2.35 in
Hammer Wt:	N.A.	140 lb.
Hammer Fall:	N.A.	30 in.
Hammer/Rod Type:	Auto/AWJ	
Rig:	CME 55 TRACK	

Groundwater Observations

Date	Depth (ft)	Notes
09/26/11		No free water obs

APPROX. BOTTOM OF MSE WALL #2 EL VARIES

Depth (ft)	Strata (1)	CLASSIFICATION OF MATERIALS (Description)	Run (Dip deg.)	Core Rec. % (RQD %)	Blows/6" (N Value)	Moisture Content %	Gravel %	Sand %	Fines %
		A-2, Dark brown silty SAND with some organics, Rec. = 1.7 ft			3-3-4-63 (7)				
		A-2, Brown gravelly silty SAND							
		A-2, Brown silty fine to medium SAND with trace coarse sand and gravel							
		Weathered ROCK, 1.5 ft - 2.0 ft	1R	90 (25)	Top of Bedrock @ 2.0 ft				
5		2.0 ft - 7.0 ft, Light gray, Quartzite Schist, foliated, moderately fractured, fine grained fractures @ 40-80 degrees from horizontal. Slightly weathered, Poor rock, NQ							
10		7.0 ft - 12.0 ft, Light gray, Quartzite Schist, foliated, moderately fractured, fine grained fractures @ 40-80 degrees from horizontal. Slightly weathered, Poor rock, NQ	2R	83 (45)					
		Hole stopped @ 12.0 ft							
15									
20									
25									
30									

Notes:
1. Stratification lines represent approximate boundary between material types. Transition may be gradual.
2. N Values have not been corrected for hammer energy.
3. Water level readings have been made at times and under conditions stated. Fluctuations of groundwater may occur due to other factors than those present at the time measurements were made.

PROJECT NAME: MIDDLESEX
PROJECT NUMBER: IM 089-2(41)

FILE NAME: z07a052bdrborlog.dgn
PROJECT LEADER: R. HEBERT
DESIGNED BY: S.W. COLE - CBM
BORING LOG - 3

PLOT DATE: 1/3/2015
DRAWN BY: S. MORGAN
CHECKED BY: J. OLUND
SHEET 51 OF 154

S.W. COLE ENGINEERING, INC.

BORING LOG

Middlesex Bridge Replacement Project
IM 089-2(41)
U.S. Route 2 and Interstate 89

Boring No.: B- 4
Page No.: 1 of 1
SWCE Job No.: 11-0904
Checked By: CBM

Boring Crew: Nate Seguin (SWCE), Tony Martinelli (CDS)
Date Started: 9/27/11 Date Finished: 9/27/11
VTSPG NAD83: N 647237.00 ft E 1601228.00 ft
Station: Offset:
Ground Elevation: 510.5 ft

	Casing	Sampler
Type:	HW	SS
I.D.:	4 in	2.35 in
Hammer Wt:	N.A.	140 lb.
Hammer Fall:	N.A.	30 in.

Hammer/Rod Type: Auto/AWJ
Rig: CME 55 TRACK

Groundwater Observations

Date	Depth (ft)	Notes
09/27/11		No free water obs

Depth (ft)	Strata (1)	CLASSIFICATION OF MATERIALS (Description)	Run (Dip deg.)	Core Rec. % (RQD %)	Blows/6" (N Value)	Moisture Content %	Gravel %	Sand %	Fines %
		Dark brown silty SAND with some organics, Rec. = 1.5 ft, 0.0 ft – 0.4 ft Brown silty fine to medium SAND with trace organics, 0.4 ft – 1.0 ft Brown silty fine to medium SAND with probable rock fragments, 1.0 ft – 3.5 ft			1-1-3-4 (4)				
5		3.5 ft – 9.0 ft, Light gray, Quartzite Schist, foliated, moderately fractured, fine grained fractures @ 40-80 degrees from horizontal. Slightly weathered, Poor rock NQ	1R	90 (28)	Top of Bedrock @ 4.0 ft				
10		9.0 ft – 14.0 ft, Light gray, Quartzite Schist, foliated, moderately fractured, fine grained fractures @ 40-80 degrees from horizontal. Slightly weathered, Poor rock, NQ	2R	93 (55)					
15		Hole stopped @ 14.0 ft							
20									
25									
30									

APPROX. BOTTOM OF MSE WALL #1 EL VARIES

Notes:
1. Stratification lines represent approximate boundary between material types. Transition may be gradual.
2. N Values have not been corrected for hammer energy.
3. Water level readings have been made at times and under conditions stated. Fluctuations of groundwater may occur due to other factors than those present at the time measurements were made.

PROJECT NAME: MIDDLESEX
PROJECT NUMBER: IM 089-2(41)

FILE NAME: z07a052bdrborlog.dgn
PROJECT LEADER: R. HEBERT
DESIGNED BY: S.W. COLE - CBM
BORING LOG - 4

PLOT DATE: 1/3/2015
DRAWN BY: S. MORGAN
CHECKED BY: J. OLUND
SHEET 52 OF 154

S.W. COLE ENGINEERING, INC.

BORING LOG

Middlesex Bridge Replacement Project
IM 089-2(41)
U.S. Route 2 and Interstate 89

Boring No.: B- 5
Page No.: 1 of 2
SWCE Job No.: 11-0904
Checked By: CBM

Boring Crew: Nate Seguin (SWCE), Tony Martinelli (CDS)
Date Started: 9/27/11 Date Finished: 9/28/11
VTSPG NAD83: N 647214.00 ft E 1601266.00 ft
Station: Offset:
Ground Elevation: 507.0 ft

	Casing	Sampler
Type:	HW	SS
I.D.:	4 in	2.35 in
Hammer Wt:	N.A.	140 lb.
Hammer Fall:	N.A.	30 in.

Hammer/Rod Type: Auto/AWJ
Rig: CME 55 TRACK

Groundwater Observations		
Date	Depth (ft)	Notes
09/28/11	19.3	@ 8:00 am

APPROX. BOTTOM OF MSE WALL #1 EL VARIES

Depth (ft)	Strata (1)	CLASSIFICATION OF MATERIALS (Description)	Run (Dip deg.)	Core Rec. % (RQD %)	Blows/6" (N Value)	Moisture Content %	Gravel %	Sand %	Fines %
		A-2, Dark brown silty SAND with some organics, Rec. = 1.7 ft			1-1-1-1 (2)				
		A-2, Brown silty fine to medium SAND with trace organics and gravel							
5		A-2, Brown silty SAND with some weathered rock fragments Rec. = 0.8 ft			7-6-4-4 (10)				
10		A-2, Brown silty fine to medium SAND with trace rootlets Organic content = 2.4%, Rec. = 0.8 ft, 10.0 ft			2-1-1-1 (2)	29.7			
15		A-4/A-5, Brown SILT with some fine sand Rec. = 1.7 ft			2-1-2-3 (3)	30.4		6.7	93.3
20		A-2, Gray-brown silty fine SAND Rec. = 1.3 ft			2-2-2-2 (4)				
25		A-3, Brown fine SAND with some silt Rec. = 1.3 ft			2-3-5-6 (8)	25.0			
30		Rec. = 1.0 ft			4-7-11-11 (18)				
		A-2, Gray-brown silty fine SAND							
		A-2, Brown silty fine SAND with some iron oxide staining							

Notes:
1. Stratification lines represent approximate boundary between material types. Transition may be gradual.
2. N Values have not been corrected for hammer energy.
3. Water level readings have been made at times and under conditions stated. Fluctuations of groundwater may occur due to other factors than those present at the time measurements were made.

S.W. COLE ENGINEERING, INC.

BORING LOG

Middlesex Bridge Replacement Project
IM 089-2(41)
U.S. Route 2 and Interstate 89

Boring No.: B- 5
Page No.: 2 of 2
SWCE Job No.: 11-0904
Checked By: CBM

Boring Crew: Nate Seguin (SWCE), Tony Martinelli (CDS)
Date Started: 9/27/11 Date Finished: 9/28/11
VTSPG NAD83: N 647214.00 ft E 1601266.00 ft
Station: Offset:
Ground Elevation: 507.0 ft

	Casing	Sampler
Type:	HW	SS
I.D.:	4 in	2.35 in
Hammer Wt:	N.A.	140 lb.
Hammer Fall:	N.A.	30 in.

Hammer/Rod Type: Auto/AWJ
Rig: CME 55 TRACK

Groundwater Observations		
Date	Depth (ft)	Notes
09/28/11	19.3	@ 8:00 am

Depth (ft)	Strata (1)	CLASSIFICATION OF MATERIALS (Description)	Run (Dip deg.)	Core Rec. % (RQD %)	Blows/6" (N Value)	Moisture Content %	Gravel %	Sand %	Fines %
		Rec. = 1.3 ft			4-7-5-7 (12)				
40		Rec. = 1.5 ft			9-8-5-54 (13)	21.2	8.0	76.3	14.7
45		41.9 ft - 47.0 ft, Light gray, Quartzite, foliated, slightly fractured, fine grained fractures @ 40-70 degrees from horizontal. Slightly weathered, Fair rock NQ	1R	80 (62)	Top of Bedrock @ 41.9 ft				
		Hole stopped @ 47.0 ft							
50									
55									
60									
65									

Notes:
1. Stratification lines represent approximate boundary between material types. Transition may be gradual.
2. N Values have not been corrected for hammer energy.
3. Water level readings have been made at times and under conditions stated. Fluctuations of groundwater may occur due to other factors than those present at the time measurements were made.

PROJECT NAME: MIDDLESEX
PROJECT NUMBER: IM 089-2(41)

FILE NAME: z07a052bdrborlog.dgn
PROJECT LEADER: R. HEBERT
DESIGNED BY: S.W. COLE - CBM
BORING LOG - 5

PLOT DATE: 1/3/2015
DRAWN BY: S. MORGAN
CHECKED BY: J. OLUND
SHEET 53 OF 154

S.W. COLE ENGINEERING, INC.

BORING LOG

Middlesex Bridge Replacement Project
IM 089-2(41)
U.S. Route 2 and Interstate 89

Boring No.: B- 6
Page No.: 1 of 1
SWCE Job No.: 11-0904
Checked By: CBM

Boring Crew: Nate Seguin (SWCE), Tony Martinelli (CDS)
Date Started: 10/03/11 Date Finished: 10/03/11
VTSPG NAD83: N 647178.00 ft E 1601334.00 ft
Station: Offset:
Ground Elevation: 508.5 ft

	Casing	Sampler
Type:	HW	SS
I.D.:	4 in	2.35 in
Hammer Wt:	N.A.	140 lb.
Hammer Fall:	N.A.	30 in.
Hammer/Rod Type:	Auto/AWJ	
Rig:	CME 55 TRACK	

Groundwater Observations

Date	Depth (ft)	Notes
10/11/11	14.6	

Depth (ft)	Strata (1)	CLASSIFICATION OF MATERIALS (Description)	Well Diagram	Run (Dip deg.)	Core Rec. % (RQD %)	Blows/6" (N Value)	Moisture Content %	Gravel %	Sand %	Fines %
		A-2, Dark brown silty fine SAND with some organics, Rec. = 0.8 ft				WOH-12"-1-1				
		A-2, Brown silty fine SAND with trace organics								
5		A-4/A-5, Brown SILT and fine SAND Rec. = 1.5 ft				2-3-4-5 (7)				
10		A-4/A-5, Brown fine SAND and SILT Rec. = 1.5 ft				5-6-6-7 (12)	21.4			
15		A-2, Brown silty SAND with trace gravel Rec. = 1.3 ft				3-2-3-8 (5)				
		A-2, Brown silty fine SAND								
20		A-3, Brown fine SAND with trace silt Rec. = 1.3 ft				8-15-12-13 (27)	22.6			
25		23.3 ft - 28.5 ft, Medium gray, Graphitic Schist, fine to medium grained, slightly fractured, fractures @ 20-80 degrees from horizontal. Slightly weathered, Poor rock NQ		1R	78 (45)	Top of Bedrock @ 23.3 ft				
30		28.5 ft - 33.5 ft, Medium gray, Graphitic Schist, fine to medium grained, slightly fractured, fractures @ 20-80 degrees from horizontal. Slightly weathered, Excellent rock, NQ		2R	90 (90)					
		Hole stopped @ 33.5 ft								

Notes:
1. Stratification lines represent approximate boundary between material types. Transition may be gradual.
2. N Values have not been corrected for hammer energy.
3. Water level readings have been made at times and under conditions stated. Fluctuations of groundwater may occur due to other factors than those present at the time measurements were made.

PROJECT NAME: MIDDLESEX
PROJECT NUMBER: IM 089-2(41)

FILE NAME: z07a052bdrborlog.dgn
PROJECT LEADER: R. HEBERT
DESIGNED BY: S.W. COLE - CBM
BORING LOG - 6

PLOT DATE: 1/3/2015
DRAWN BY: S. MORGAN
CHECKED BY: J. OLUND
SHEET 54 OF 154

S.W. COLE ENGINEERING, INC.

BORING LOG

Middlesex Bridge Replacement Project
IM 089-2(41)
U.S. Route 2 and Interstate 89

Boring No.: B- 7
Page No.: 1 of 1
SWCE Job No.: 11-0904
Checked By: CBM

Boring Crew: Nate Seguin (SWCE), Tony Martinelli (CDS)
Date Started: 10/03/11 Date Finished: 10/04/11
VTSPG NAD83: N 647105.00 ft E 1601331.00 ft
Station: Offset:
Ground Elevation: 500.0 ft

	Casing	Sampler
Type:	HW	SS
I.D.:	4 in	2.35 in
Hammer Wt:	N.A.	140 lb.
Hammer Fall:	N.A.	30 in.
Hammer/Rod Type:	Auto/AWJ	
Rig:	CME 55 TRACK	

Groundwater Observations

Date	Depth (ft)	Notes
10/11/11	6.4	

Depth (ft)	Strata (1)	CLASSIFICATION OF MATERIALS (Description)	Run (Dip deg.)	Core Rec. % (RQD %)	Blows/6" (N Value)	Moisture Content %	Gravel %	Sand %	Fines %
		A-2, Brown silty SAND with some organics, Rec. = 1.3 ft							
		A-2, Brown silty fine SAND with trace organics			WOH-1-1-12"				
5		A-4/A-5, Brown fine sandy SILT with trace organics, some mottling Rec. = 1.7 ft			1-18"-1	42.9		17.2	82.8
10		A-2/A-3, Gray-brown fine sand with some wood fragments and silt Rec. = 1.2 ft			2-2-2-2 (4)				
15		Organic content = 1.9%, Rec. = 1.2 ft, 15.0 ft			1-1-4-2 (5)	20.9			
20		Rec. = 0.4 ft			12-50-5"				
		20.9 ft – 26.0 ft, Light to medium gray, Quartzite, fine grained, slightly fractured, hard, fractures @ 70-80 degrees from horizontal. Slightly weathered, Excellent rock NQ	1R	100 (90)	Top of Bedrock @ 20.9 ft				
25									
		Hole stopped @ 26.0 ft							
30									

Notes:
1. Stratification lines represent approximate boundary between material types. Transition may be gradual.
2. N Values have not been corrected for hammer energy.
3. Water level readings have been made at times and under conditions stated. Fluctuations of groundwater may occur due to other factors than those present at the time measurements were made.

PROJECT NAME: MIDDLESEX
PROJECT NUMBER: IM 089-2(41)

FILE NAME: z07a052bdrborlog.dgn
PROJECT LEADER: R. HEBERT
DESIGNED BY: S.W. COLE - CBM
BORING LOG - 7

PLOT DATE: 1/3/2015
DRAWN BY: S. MORGAN
CHECKED BY:
SHEET 55 OF 154

S.W. COLE ENGINEERING, INC.

BORING LOG

Middlesex Bridge Replacement Project
IM 089-2(41)
U.S. Route 2 and Interstate 89

Boring No.: B- 8
Page No.: 1 of 1
SWCE Job No.: 11-0904
Checked By: CBM

Boring Crew: Nate Seguin (SWCE), Tony Martinelli (CDS)
Date Started: 9/30/11 Date Finished: 9/30/11
VTSPG NAD83: N 647167.00 ft E 1601351.00 ft
Station: Offset:
Ground Elevation: 508.0 ft

	Casing	Sampler
Type:	HW	SS
I.D.:	4 in	2.35 in
Hammer Wt:	N.A.	140 lb.
Hammer Fall:	N.A.	30 in.

Hammer/Rod Type: Auto/AWJ
Rig: CME 55 TRACK

Groundwater Observations

Date	Depth (ft)	Notes
09/30/11		No free water obs

Depth (ft)	Strata (1)	CLASSIFICATION OF MATERIALS (Description)	Run (Dip deg.)	Core Rec. % (RQD %)	Blows/6" (N Value)	Moisture Content %	Gravel %	Sand %	Fines %
		A-2, Dark brown silty SAND with some organics, Rec. = 1.7 ft			1-12"-1-12"				
		A-4/A-5, Light brown SILT and fine SAND with trace organics							
5		A-4/A-5, Brown SILT with some fine SAND Rec. = 1.5 ft			2-2-4-3 (6)	28.0		7.3	92.7
10		A-2, Brown silty fine SAND with some mottling Rec. = 1.3 ft			3-4-6-33 (10)	18.6			
		Top of Bedrock @ 11.5 ft							
15		11.5 ft - 17.0 ft, Medium gray, Graphitic Schist, fine to medium grained, slightly fractured, fractures @ 65-80 degrees from horizontal. Slightly weathered, Fair rock NQ	1R	80 (63)					
20		17.0 ft - 22.0 ft, Medium gray, Graphitic Schist, fine to medium grained, slightly fractured, fractures @ 65-80 degrees from horizontal. Slightly weathered, Fair rock, NQ	2R	92 (81)					
25		Hole stopped @ 22.0 ft							
30									

Notes:
1. Stratification lines represent approximate boundary between material types. Transition may be gradual.
2. N Values have not been corrected for hammer energy.
3. Water level readings have been made at times and under conditions stated. Fluctuations of groundwater may occur due to other factors than those present at the time measurements were made.

PROJECT NAME: MIDDLESEX
PROJECT NUMBER: IM 089-2(41)

FILE NAME: z07a052bdrborlog.dgn
PROJECT LEADER: R. HEBERT
DESIGNED BY: S.W. COLE - CBM
BORING LOG - 8

PLOT DATE: 1/3/2015
DRAWN BY: S. MORGAN
CHECKED BY: J. OLUND
SHEET 56 OF 154

S.W. COLE ENGINEERING, INC.

BORING LOG

Middlesex Bridge Replacement Project
IM 089-2(41)
U.S. Route 2 and Interstate 89

Boring No.: B- 9
Page No.: 1 of 2
SWCE Job No.: 11-0904
Checked By: CBM

Boring Crew: Nate Seguin (SWCE), Tony Martinelli (CDS)
Date Started: 9/28/11 Date Finished: 9/28/11
VTSPG NAD83: N 647217.00 ft E 1601350.00 ft
Station: Offset:
Ground Elevation: 514.0 ft

	Casing	Sampler
Type:	HW	SS
I.D.:	4 in	2.35 in
Hammer Wt:	N.A.	140 lb.
Hammer Fall:	N.A.	30 in.

Hammer/Rod Type: Auto/AWJ
Rig: CME 55 TRACK

Groundwater Observations		
Date	Depth (ft)	Notes
09/28/11		No free water obs

APPROX. BOTTOM OF MSE WALL #1 EL VARIES

Depth (ft)	Strata (1)	CLASSIFICATION OF MATERIALS (Description)	Run (Dip deg.)	Core Rec. % (RQD %)	Blows/6" (N Value)	Moisture Content %	Gravel %	Sand %	Fines %
		A-2, Dark brown silty SAND with some wood, Rec. = 1.5 ft			1-1-2-5 (3)				
		A-2, Light brown silty fine SAND and trace organics							
		A-2, Light brown silty fine SAND							
5		A-2, Brown silty fine SAND with trace medium to coarse sand, gravel and organics Organic content = 1.9%, Rec. = 1.5 ft, 5.0 ft			3-3-4-5 (7)	24.7			
10		A-4/A-5, Brown fine sandy SILT Rec. = 1.3 ft			5-5-6-6 (11)	24.6		19.7	80.3
15		Rec. = 1.5 ft A-2/A-3, Light brown fine SAND with some silt			5-8-9-10 (17)				
20		A-2, Brown silty fine SAND with some mottling Rec. = 1.7 ft			6-8-8-11 (16)	24.2	0.3	81.9	17.8
25		Rec. = 1.0 ft A-2/A-3, Brown fine SAND with some silt and mottling			8-8-8-9 (16)				
30		Rec. = 1.2 ft			8-8-10-13 (18)				
		Orange-brown silty SAND, 32.0 ft - 35.5 ft							

Notes:
1. Stratification lines represent approximate boundary between material types. Transition may be gradual.
2. N Values have not been corrected for hammer energy.
3. Water level readings have been made at times and under conditions stated. Fluctuations of groundwater may occur due to other factors than those present at the time measurements were made.

S.W. COLE ENGINEERING, INC.

BORING LOG

Middlesex Bridge Replacement Project
IM 089-2(41)
U.S. Route 2 and Interstate 89

Boring No.: B- 9
Page No.: 2 of 2
SWCE Job No.: 11-0904
Checked By: CBM

Boring Crew: Nate Seguin (SWCE), Tony Martinelli (CDS)
Date Started: 9/28/11 Date Finished: 9/28/11
VTSPG NAD83: N 647217.00 ft E 1601350.00 ft
Station: Offset:
Ground Elevation: 514.0 ft

	Casing	Sampler
Type:	HW	SS
I.D.:	4 in	2.35 in
Hammer Wt:	N.A.	140 lb.
Hammer Fall:	N.A.	30 in.

Hammer/Rod Type: Auto/AWJ
Rig: CME 55 TRACK

Groundwater Observations		
Date	Depth (ft)	Notes
09/28/11		No free water obs

Depth (ft)	Strata (1)	CLASSIFICATION OF MATERIALS (Description)	Run (Dip deg.)	Core Rec. % (RQD %)	Blows/6" (N Value)	Moisture Content %	Gravel %	Sand %	Fines %
		Rec. = 0.8 ft			10-41-50 (88)				
		Gray weathered ROCK, 35.5 ft - 36.0 ft			Top of Bedrock @ 36.5 ft				
		36.0 ft - 44.0 ft, Dark gray & black, Graphitic Schist-Slate, trace sulfide materials, slightly fractured, fine grained, fractures at 0-70 degrees from horizontal. Slightly weathered, Good rock							
40		NQ	1R	98 (81)					
45		44.0 ft - 49.0 ft, Dark gray & black, Graphitic Schist-Slate, trace sulfide materials, slightly fractured, fine grained, fractures at 0-70 degrees from horizontal. Slightly weathered, Excellent rock, NQ	2R	100 (94)					
50		Hole stopped @ 49.0 ft							
55									
60									
65									

Notes:
1. Stratification lines represent approximate boundary between material types. Transition may be gradual.
2. N Values have not been corrected for hammer energy.
3. Water level readings have been made at times and under conditions stated. Fluctuations of groundwater may occur due to other factors than those present at the time measurements were made.

PROJECT NAME: MIDDLESEX
PROJECT NUMBER: IM 089-2(41)

FILE NAME: z07a052bdrborlog.dgn
PROJECT LEADER: R. HEBERT
DESIGNED BY: S.W. COLE - CBM
BORING LOG - 9

PLOT DATE: 1/3/2015
DRAWN BY: S. MORGAN
CHECKED BY: J. OLUND
SHEET 57 OF 154

S.W. COLE ENGINEERING, INC.

BORING LOG

Middlesex Bridge Replacement Project
IM 089-2(41)
U.S. Route 2 and Interstate 89

Boring No.: B-10
Page No.: 1 of 1
SWCE Job No.: 11-0904
Checked By: CBM

Boring Crew: Nate Seguin (SWCE), Tony Martinelli (CDS)
Date Started: 10/04/11 Date Finished: 10/04/11
VTSPG NAD83: N 647185.00 ft E 1601511.00 ft
Station: Offset:
Ground Elevation: 514.0 ft

	Casing	Sampler
Type:	HW	SS
I.D.:	4 in	2.35 in
Hammer Wt:	N.A.	140 lb.
Hammer Fall:	N.A.	30 in.
Hammer/Rod Type:	Auto/AWJ	
Rig:	CME 55 TRACK	

Groundwater Observations

Date	Depth (ft)	Notes
10/04/11		No free water obs

Depth (ft)	Strata (1)	CLASSIFICATION OF MATERIALS (Description)	Run (Dip deg.)	Core Rec. % (RQD %)	Blows/6" (N Value)	Moisture Content %	Gravel %	Sand %	Fines %
		A-2, Dark brown silty SAND with some organics, Rec. = 0.3 ft			1-1-1-2 (2)				
		A-2, Light brown silty fine SAND with some organics							
		A-2, Brown silty fine SAND with trace organics							
5		Rec. = 0.8 ft			3-2-3-2 (5)	22.7			
10		Rec. = 1.5 ft			1-1-2-2 (3)				
15		Rec. = 1.2 ft			2-1-12"-3 (1)	29.4			
20		A-2, Brown silty fine SAND with trace gravel Rec. = 1.3 ft			1-1-3-2 (4)				
		Top of Bedrock @ 23.1 ft							
25		23.1 ft - 29.0 ft, Light to medium gray, Schist - Quartzite, fine to medium grained, slightly fractured, fractures at 70-80 degrees from horizontal. Slightly weathered, Very good rock NQ	1R	100 (82)					
30		29.0 ft - 33.5 ft, Light to medium gray, Schist - Quartzite, fine to medium grained, slightly fractured, fractures at 70-80 degrees from horizontal. Slightly weathered, Very good rock, NQ	2R	96 (78)					
		Hole stopped @ 33.5 ft							

Notes:
1. Stratification lines represent approximate boundary between material types. Transition may be gradual.
2. N Values have not been corrected for hammer energy.
3. Water level readings have been made at times and under conditions stated. Fluctuations of groundwater may occur due to other factors than those present at the time measurements were made.

PROJECT NAME: MIDDLESEX
PROJECT NUMBER: IM 089-2(41)

FILE NAME: z07a052bdrborlog.dgn
PROJECT LEADER: R. HEBERT
DESIGNED BY: S.W. COLE - CBM
BORING LOG - 10

PLOT DATE: 1/3/2015
DRAWN BY: S. MORGAN
CHECKED BY: J. OLUND
SHEET 58 OF 154

S.W. COLE ENGINEERING, INC.

BORING LOG

Middlesex Bridge Replacement Project
IM 089-2(41)
U.S. Route 2 and Interstate 89

Boring No.: B-11
Page No.: 1 of 2
SWCE Job No.: 11-0904
Checked By: CBM

Boring Crew: Nate Seguin (SWCE), Tony Martinelli (CDS)
Date Started: 10/05/11 Date Finished: 10/05/11
VTSPG NAD83: N 647262.00 ft E 1601657.00 ft
Station: Offset:
Ground Elevation: 527.0 ft

	Casing	Sampler
Type:	HW	SS
I.D.:	4 in	2.35 in
Hammer Wt:	N.A.	140 lb.
Hammer Fall:	N.A.	30 in.
Hammer/Rod Type:	Auto/AWJ	
Rig:	CME 55 TRACK	

Groundwater Observations		
Date	Depth (ft)	Notes
10/05/11		No free water obs

Depth (ft)	Strata (1)	CLASSIFICATION OF MATERIALS (Description)	Run (Dip deg.)	Core Rec. % (RQD %)	Blows/6" (N Value)	Moisture Content %	Gravel %	Sand %	Fines %
		A-2, Dark brown silty SAND with som organics, Rec. = 0.2 ft			5-6-5-5 (11)	11.3			
		A-2, Brown SAND with some silt, gravel and trace organics, (PROBABLE FILL)							
5		A-1-b, Gray-brown silty GRAVEL and SAND Rec. = 1.3 ft			13-6-2-2 (8)	8.1	61.0	22.0	17.0
		A-4/A-5, Brown fine SAND and SILT							
BOTTOM OF PIER #2 EL. 519.50									
10		A-2, Dark brown to brown silty gravelly SAND, Rec. = 1.3 ft			5-5-5-6 (10)				
15		A-6/A-7, Light brown clayey SILT with some fine sand Rec. = 0.1 ft			5-5-5-5 (10)				
		A-2, Brown silty fine SAND							
20		Rec. = 1.2 ft			7-8-9-10				
25		Rec. = 1.3 ft			7-10-11-12 (21)				
30		Rec. = 1.5 ft			9-11-12-14 (23)				

Notes:
1. Stratification lines represent approximate boundary between material types. Transition may be gradual.
2. N Values have not been corrected for hammer energy.
3. Water level readings have been made at times and under conditions stated. Fluctuations of groundwater may occur due to other factors than those present at the time measurements were made.

S.W. COLE ENGINEERING, INC.

BORING LOG

Middlesex Bridge Replacement Project
IM 089-2(41)
U.S. Route 2 and Interstate 89

Boring No.: B-11
Page No.: 2 of 2
SWCE Job No.: 11-0904
Checked By: CBM

Boring Crew: Nate Seguin (SWCE), Tony Martinelli (CDS)
Date Started: 10/05/11 Date Finished: 10/05/11
VTSPG NAD83: N 647262.00 ft E 1601657.00 ft
Station: Offset:
Ground Elevation: 527.0 ft

	Casing	Sampler
Type:	HW	SS
I.D.:	4 in	2.35 in
Hammer Wt:	N.A.	140 lb.
Hammer Fall:	N.A.	30 in.
Hammer/Rod Type:	Auto/AWJ	
Rig:	CME 55 TRACK	

Groundwater Observations		
Date	Depth (ft)	Notes
10/05/11		No free water obs

Depth (ft)	Strata (1)	CLASSIFICATION OF MATERIALS (Description)	Run (Dip deg.)	Core Rec. % (RQD %)	Blows/6" (N Value)	Moisture Content %	Gravel %	Sand %	Fines %
		Rec. = 1.5 ft			7-9-9-10 (18)	25.0			
40		A-3, Brown fine SAND with trace silt Rec. = 1.3 ft			6-8-8-11 (16)	21.9			
45		A-2, Brown silty gravelly SAND (GLACIAL TILL) Rec. = 0.3 ft Rec. = 0.7 ft			9-50-4" 46-28-29-27 (57)				
ESTIMATED BOTTOM OF PILE AT PIER #2 EL. 477.0									
50		50.0 ft - 57.0 ft, Medium to dark gray, Graphitic Schist, quartz veins present, fine to medium grained, moderately fractured, fractures at 50-80 degrees from horizontal. Slightly weathered, Very poor, weathered, soft zone 57 to 57.6' NQ			Top of Bedrock @ 50.0 ft				
			1R	100 (8)					
55									
		57.0 ft - 62.0 ft, Medium to dark gray, Graphitic Schist, quartz veins present, fine to medium grained, moderately fractured, fractures at 50-80 degrees from horizontal. Slightly weathered, Fair rock, NQ	2R	100 (57)					
60									
		Hole stopped @ 62.0 ft							
65									

Notes:
1. Stratification lines represent approximate boundary between material types. Transition may be gradual.
2. N Values have not been corrected for hammer energy.
3. Water level readings have been made at times and under conditions stated. Fluctuations of groundwater may occur due to other factors than those present at the time measurements were made.

PROJECT NAME: MIDDLESEX
PROJECT NUMBER: IM 089-2(41)

FILE NAME: z07a052bdrborlog.dgn
PROJECT LEADER: R. HEBERT
DESIGNED BY: S.W. COLE - CBM
BORING LOG - II

PLOT DATE: 1/3/2015
DRAWN BY: S. MORGAN
CHECKED BY: J. OLUND
SHEET 59 OF 154

S.W. COLE ENGINEERING, INC.

BORING LOG

Middlesex Bridge Replacement Project
IM 089-2(41)
U.S. Route 2 and Interstate 89

Boring No.: B-12
Page No.: 1 of 1
SWCE Job No.: 11-0904
Checked By: CBM

Boring Crew: Nate Seguin (SWCE), Tony Martinelli (CDS)
Date Started: 10/05/11 Date Finished: 10/05/11
VTSPG NAD83: N 647229.00 ft E 1601688.00 ft
Station: Offset:
Ground Elevation: 526.0 ft

	Casing	Sampler
Type:	HW	SS
I.D.:	4 in	2.35 in
Hammer Wt:	N.A.	140 lb.
Hammer Fall:	N.A.	30 in.
Hammer/Rod Type:	Auto/AWJ	
Rig:	CME 55 TRACK	

Groundwater Observations

Date	Depth (ft)	Notes
10/05/11		No free water obs

Depth (ft)	Strata (1)	CLASSIFICATION OF MATERIALS (Description)	Run (Dip deg.)	Core Rec. % (RQD %)	Blows/6" (N Value)	Moisture Content %	Gravel %	Sand %	Fines %
		A-2, Dark brown silty SAND with some organics, Rec. = 1.8 ft			1-4-6-6 (10)				
		A-2, Brown SAND with some silt, gravel and trace organics (PROBABLE FILL)							
5		A-2, Brown silty fine SAND Rec. = 1.5 ft			6-8-8-8 (16)				
BOTTOM OF PIER #2 EL. 519.50									
10		A-2, Gray silty fine SAND with trace gravel and organics Rec. = 1.3 ft			3-2-3-7 (5)				
		A-2, Gray-brown SAND with some silt							
15		Rec. = 0.8 ft			6-8-7-5 (15)	8.3	44.0	44.0	12.0
20		A-4/A-5, Brown fine SAND and SILT Rec. = 1.3 ft			6-8-21 50-0" (29)	25.5			
ESTIMATED BOTTOM OF PILE AT PIER #2 EL. 504.50									
25		21.5 ft - 26.5 ft, Medium gray, Quartzite, fine grained, slightly fractured, massive, fractures at 45-70 degrees from horizontal. Hard, Slightly weathered, Excellent, NQ	1R	93 (94)	Top of Bedrock @ 21.5 ft				
30		26.5 ft - 27.0 ft, Medium gray, Quartzite, fine grained, slightly fractured, massive, fractures at 45-70 degrees from horizontal. Hard, Slightly weathered, Excellent, NQ 27.0 ft - 31.5 ft, Light gray, Schist - Quartzite, fine to coarse grained, with coarse grained quartz veins. Excellent	2R	0 (100)					
		Hole stopped @ 31.5 ft							

Notes:
1. Stratification lines represent approximate boundary between material types. Transition may be gradual.
2. N Values have not been corrected for hammer energy.
3. Water level readings have been made at times and under conditions stated. Fluctuations of groundwater may occur due to other factors than those present at the time measurements were made.

PROJECT NAME: MIDDLESEX
PROJECT NUMBER: IM 089-2(41)

FILE NAME: z07a052bdrborlog.dgn
PROJECT LEADER: R. HEBERT
DESIGNED BY: S.W. COLE - CBM
BORING LOG - 12

PLOT DATE: 1/3/2015
DRAWN BY: S. MORGAN
CHECKED BY: J. OLUND
SHEET 60 OF 154

S.W. COLE ENGINEERING, INC.

BORING LOG

Middlesex Bridge Replacement Project
IM 089-2(41)
U.S. Route 2 and Interstate 89

Boring No.: B-13
Page No.: 1 of 1
SWCE Job No.: 11-0904
Checked By: CBM

Boring Crew: Nate Seguin (SWCE), Tony Martinelli (CDS)
Date Started: 10/11/11 Date Finished: 10/11/11
VTSPG NAD83: N 647322.00 ft E 1601793.00 ft
Station: Offset:
Ground Elevation: 548.0 ft

	Casing	Sampler
Type:	HW	SS
I.D.:	4 in	2.35 in
Hammer Wt:	N.A.	140 lb.
Hammer Fall:	N.A.	30 in.

Hammer/Rod Type: Auto/AWJ
Rig: CME 55 TRACK

Groundwater Observations

Date	Depth (ft)	Notes
10/11/11		No free water obs

Depth (ft)	Strata (1)	CLASSIFICATION OF MATERIALS (Description)	Run (Dip deg.)	Core Rec. % (RQD %)	Blows/6" (N Value)	Moisture Content %	Gravel %	Sand %	Fines %
		Visual Classification, ASPHALT, Rec. = 1.0 ft							
		A-1-b, Gray-brown SAND with some gravel and silt, (PROBABLE FILL)			27-10-17-14 (27)	1.6	55.0	31.3	13.7
5		A-2, Brown silty fine SAND with trace gravel, (PROBABLE FILL) Rec. = 1.0 ft			7-7-11-9 (18)				
ESTIMATED BOTTOM OF EXISTING ABUT EL 538.38± 10		A-2, Brown silty fine SAND, (PROBABLE FILL) Rec. = 1.0 ft			4-5-5-6 (10)				
BOTTOM OF ABUT #2 EL. 534.00 15		A-2, Brown silty gravelly SAND Rec. = 0.8 ft			9-11-13-16 (24)	9.6	29.0	36.5	34.5
20		Rec. = 1.0 ft			7-8-11-16 (19)	10.8			
		Significally weathered ROCK, 21.0 ft – 24.0 ft							
ESTIMATED BOTTOM OF PILE AT ABUT #2 EL. 524.0 25		24.0 ft – 29.0 ft, Light to medium gray, Quartzite, fine grained, slightly weathered in fractures and joints, moderately fractured, trace silfide minerals in fractures, fractures at 60–70 degrees from horizontal. Slightly weathered, Poor rock, NQ	1R	100 (26)	Top of Bedrock @ 24.0 ft				
30		29.0 ft – 33.0 ft, Light to medium gray, Quartzite, fine grained, slightly weathered in fractures and joints, moderately fractured, trace silfide minerals in fractures, fractures at 60–70 degrees from horizontal. Slightly weathered, Poor rock, NQ	2R	88 (19)					
		Hole stopped @ 33.0 ft Hole terminated due to bit wear							

Notes:
1. Stratification lines represent approximate boundary between material types. Transition may be gradual.
2. N Values have not been corrected for hammer energy.
3. Water level readings have been made at times and under conditions stated. Fluctuations of groundwater may occur due to other factors than those present at the time measurements were made.

PROJECT NAME: MIDDLESEX
PROJECT NUMBER: IM 089-2(41)

FILE NAME: z07a052bdrborlog.dgn
PROJECT LEADER: R. HEBERT
DESIGNED BY: S.W. COLE - CBM
BORING LOG - 13

PLOT DATE: 1/3/2015
DRAWN BY: S. MORGAN
CHECKED BY: J. OLUND
SHEET 61 OF 154

S.W. COLE ENGINEERING, INC.

BORING LOG

Middlesex Bridge Replacement Project
IM 089-2(41)
U.S. Route 2 and Interstate 89

Boring No.: B-14
Page No.: 1 of 1
SWCE Job No.: 11-0904
Checked By: CBM

Boring Crew: Nate Seguin (SWCE), Tony Martinelli (CDS)
Date Started: 10/06/11 Date Finished: 10/06/11
VTSPG NAD83: N 647283.00 ft E 1601837.00 ft
Station: Offset:
Ground Elevation: 528.5 ft

	Casing	Sampler
Type:	HW	SS
I.D.:	4 in	2.35 in
Hammer Wt:	N.A.	140 lb.
Hammer Fall:	N.A.	30 in.

Hammer/Rod Type: Auto/AWJ
Rig: CME 55 TRACK

Groundwater Observations

Date	Depth (ft)	Notes
10/06/11		No free water obs

Depth (ft)	Strata (1)	CLASSIFICATION OF MATERIALS (Description)	Run (Dip deg.)	Core Rec. % (RQD %)	Blows/6" (N Value)	Moisture Content %	Gravel %	Sand %	Fines %
		Dark brown silty SAND with some organics, Rec. = 1.5 ft, 0.0 ft – 0.4 ft							
		Bituminous PAVEMENT, 0.4 ft – 0.5 ft							
		A-2, Brown gravelly SAND with some silt and trace organics, (PROBABLE FILL)			1-9-7-9 (16)				
		A-4/A-5, Brown SILT and fine SAND							
5		Rec. = 1.0 ft			WOH-15"-3-3"-6	24.1		13.4	86.6
10		A-2, Brown silty fine SAND Rec. = 1.3 ft			5-5-4-3 (9)				
15		Rec. = 1.3 ft			5-5-4-3 (9)	17.1			
20		A-4/A-5, Brown SILT with trace fine SAND Rec. = 2.0 ft			1-1-2-2 (3)	41.9		9.2	90.8
25		23.0 ft – 29.0 ft, White to light gray, Schist, fine to coarse grained, large quartze crystals, slightly fractured, mostly massive, little foliation, fractures at 0-65 degrees from horizontal. Hard, Slightly to moderately weathered, Excellent, NQ	1R	100 (91)	Top of Bedrock @ 23.0 ft				
30		NQ 29.0 ft – 33.0 ft, White to light gray, Schist, fine to coarse grained, large quartze crystals, slightly fractured, mostly massive, little foliation, fractures at 0-65 degrees from horizontal. Hard, Slightly to moderately weathered, Excellent	2R	95 (90)					
		Hole stopped @ 33.0 ft							

BOTTOM OF ABUT #2 EL. 524.00

APPROX. BOTTOM OF MSE WALL #3 EL VARIES

ESTIMATED BOTTOM OF PILE AT ABUT #2 EL. 505.5

Notes:
1. Stratification lines represent approximate boundary between material types. Transition may be gradual.
2. N Values have not been corrected for hammer energy.
3. Water level readings have been made at times and under conditions stated. Fluctuations of groundwater may occur due to other factors than those present at the time measurements were made.

PROJECT NAME: MIDDLESEX
PROJECT NUMBER: IM 089-2(41)

FILE NAME: z07a052bdrborlog.dgn
PROJECT LEADER: R. HEBERT
DESIGNED BY: S.W. COLE - CBM
BORING LOG - 14

PLOT DATE: 1/3/2015
DRAWN BY: S. MORGAN
CHECKED BY: J. OLUND
SHEET 62 OF 154

S.W. COLE ENGINEERING, INC.

BORING LOG

Middlesex Bridge Replacement Project
IM 089-2(41)
U.S. Route 2 and Interstate 89

Boring No.: B-15
Page No.: 1 of 2
SWCE Job No.: 11-0904
Checked By: CBM

Boring Crew: Nate Seguin (SWCE), Tony Martinelli (CDS)
Date Started: 10/07/11 Date Finished: 10/07/11
VTSPG NAD83: N 647305.00 ft E 1601888.00 ft
Station: Offset:
Ground Elevation: 532.0 ft

	Casing	Sampler
Type:	HW	SS
I.D.:	4 in	2.35 in
Hammer Wt:	N.A.	140 lb.
Hammer Fall:	N.A.	30 in.

Hammer/Rod Type: Auto/AWJ
Rig: CME 55 TRACK

Groundwater Observations		
Date	Depth (ft)	Notes
10/07/11		No free water obs

Depth (ft)	Strata (1)	CLASSIFICATION OF MATERIALS (Description)	Run (Dip deg.)	Core Rec. % (RQD %)	Blows/6" (N Value)	Moisture Content %	Gravel %	Sand %	Fines %
		A-2, Dark brown silty SAND with some organics, Rec. = 1.3 ft, (PROBABLE FILL)			1-1-3-5 (4)				
		A-2, Brown silty fine SAND with some gravel, trace organics, (PROBABLE FILL)							
		A-2, Brown silty fine SAND with trace organics, (PROBABLE FILL)							
		A-2, Brown silty fine SAND with trace organics and medium to coarse sand, (PROBABLE FILL)							
5		Rec. = 1.2 ft			8-11-10-11 (21)	20.1			
10		A-2, Brown silty fine SAND with trace organics and medium to coarse sand, Rec. = 1.5 ft			7-7-9-11 (16)				
15		Rec. = 1.3 ft			6-13-13-17 (26)				
20		Rec. = 1.5 ft			4-5-7-9 (12)				
		A-4/A-5, Brown fine sandy SILT							
25		Rec. = 1.5 ft			2-3-4-5 (7)	26.1		19.4	80.6
30		Rec. = 0.0 ft			7-7-8-18 (15)				
		TILL, 31.5 ft - 34.0 ft							
		34.0 ft - 39.0 ft, Light gray, Quartzite, fine grained, slightly fractured, massive	1R	100	Top of Bedrock @ 34.0 ft				

APPROX. BOTTOM OF MSE WALL #3 EL VARIES

Notes:
1. Stratification lines represent approximate boundary between material types. Transition may be gradual.
2. N Values have not been corrected for hammer energy.
3. Water level readings have been made at times and under conditions stated. Fluctuations of groundwater may occur due to other factors than those present at the time measurements were made.

S.W. COLE ENGINEERING, INC.

BORING LOG

Middlesex Bridge Replacement Project
IM 089-2(41)
U.S. Route 2 and Interstate 89

Boring No.: B-15
Page No.: 2 of 2
SWCE Job No.: 11-0904
Checked By: CBM

Boring Crew: Nate Seguin (SWCE), Tony Martinelli (CDS)
Date Started: 10/07/11 Date Finished: 10/07/11
VTSPG NAD83: N 647305.00 ft E 1601888.00 ft
Station: Offset:
Ground Elevation: 532.0 ft

	Casing	Sampler
Type:	HW	SS
I.D.:	4 in	2.35 in
Hammer Wt:	N.A.	140 lb.
Hammer Fall:	N.A.	30 in.

Hammer/Rod Type: Auto/AWJ
Rig: CME 55 TRACK

Groundwater Observations		
Date	Depth (ft)	Notes
10/07/11		No free water obs

Depth (ft)	Strata (1)	CLASSIFICATION OF MATERIALS (Description)	Run (Dip deg.)	Core Rec. % (RQD %)	Blows/6" (N Value)	Moisture Content %	Gravel %	Sand %	Fines %
		to some. Hard, Severely weathered, Excellent, NQ		(91)					
		Hole stopped @ 39.0 ft							
40									
45									
50									
55									
60									
65									

Notes:
1. Stratification lines represent approximate boundary between material types. Transition may be gradual.
2. N Values have not been corrected for hammer energy.
3. Water level readings have been made at times and under conditions stated. Fluctuations of groundwater may occur due to other factors than those present at the time measurements were made.

PROJECT NAME: MIDDLESEX
PROJECT NUMBER: IM 089-2(41)

FILE NAME: z07a052bdrborlog.dgn
PROJECT LEADER: R. HEBERT
DESIGNED BY: S.W. COLE - CBM
BORING LOG - 15

PLOT DATE: 1/3/2015
DRAWN BY: S. MORGAN
CHECKED BY: J. OLUND
SHEET 63 OF 154

S.W. COLE ENGINEERING, INC.

BORING LOG

Middlesex Bridge Replacement Project
IM 089-2(41)
U.S. Route 2 and Interstate 89

Boring No.: B-16
Page No.: 1 of 1
SWCE Job No.: 11-0904
Checked By: CBM

Boring Crew: Nate Seguin (SWCE), Tony Martinelli (CDS)
Date Started: 10/12/11 Date Finished: 10/12/11
VTSPG NAD83: N 647283.00 ft E 1601994.00 ft
Station: Offset:
Ground Elevation: 507.5 ft

	Casing	Sampler
Type:	HW	SS
I.D.:	4 in	2.35 in
Hammer Wt:	N.A.	140 lb.
Hammer Fall:	N.A.	30 in.

Hammer/Rod Type: Auto/AWJ
Rig: CME 55 TRACK

Groundwater Observations

Date	Depth (ft)	Notes
10/12/11		No free water obs

Depth (ft)	Strata (1)	CLASSIFICATION OF MATERIALS (Description)	Run (Dip deg.)	Core Rec. % (RQD %)	Blows/6" (N Value)	Moisture Content %	Gravel %	Sand %	Fines %
		A-4/A-5, Brown SILT with some organics, Rec. = 1.5 ft			WOH-1-5-3 (6)	19.5			
		A-4/A-5, Brown SILT with some sand and gravel							
5		A-4/A-5, Brown SILT with some fine sand and trace organics Organic content = 2.4%, Rec. = 1.7 ft, 5.0 ft			3-3-2-1	26.6			
10		A-4/A-5, Brown SILT and fine SAND Rec. = 1.5 ft			1-1-2-2 (3)	25.4		42.9	57.1
15		14.0 ft – 19.0 ft, Medium gray, Quartzite, fine grained, slightly fractured, massive, fractures at 20-85 degrees from horizontal. Hard, Very slightly weathered, Excellent, NQ	1R	92 (94)	Top of Bedrock @ 14.0 ft				
20		19.0 ft – 24.0 ft, Medium gray, Quartzite, fine grained, slightly fractured, massive, fractures at 20-60 degrees from horizontal. Hard, Very slightly weathered, Very good rock, NQ	2R	95 (89)					
25		Hole stopped @ 24.0 ft							
30									

Notes:
1. Stratification lines represent approximate boundary between material types. Transition may be gradual.
2. N Values have not been corrected for hammer energy.
3. Water level readings have been made at times and under conditions stated. Fluctuations of groundwater may occur due to other factors than those present at the time measurements were made.

PROJECT NAME: MIDDLESEX
PROJECT NUMBER: IM 089-2(41)

FILE NAME: z07a052bdrborlog.dgn
PROJECT LEADER: R. HEBERT
DESIGNED BY: S.W. COLE - CBM
BORING LOG - 16

PLOT DATE: 1/3/2015
DRAWN BY: S. MORGAN
CHECKED BY: J. OLUND
SHEET 64 OF 154

S.W. COLE ENGINEERING, INC.

BORING LOG

Middlesex Bridge Replacement Project
IM 089-2(41)
U.S. Route 2 and Interstate 89

Boring No.: B-17
Page No.: 1 of 2
SWCE Job No.: 11-0904
Checked By: CBM

Boring Crew: Nate Seguin (SWCE), Tony Martinelli (CDS)
Date Started: 10/07/11 Date Finished: 10/10/11
VTSPG NAD83: N 647354.00 ft E 1601962.00 ft
Station: Offset:
Ground Elevation: 536.5 ft

	Casing	Sampler
Type:	HW	SS
I.D.:	4 in	2.35 in
Hammer Wt:	N.A.	140 lb.
Hammer Fall:	N.A.	30 in.

Hammer/Rod Type: Auto/AWJ
Rig: CME 55 TRACK

Groundwater Observations		
Date	Depth (ft)	Notes
10/07/11		No free water obs

Depth (ft)	Strata (1)	CLASSIFICATION OF MATERIALS (Description)	Run (Dip deg.)	Core Rec. % (RQD %)	Blows/6" (N Value)	Moisture Content %	Gravel %	Sand %	Fines %
		A-2, Brown silty fine SAND with some organics, Rec. = 1.5 ft			1-1-3-5 (4)				
		A-2, Brown silty fine SAND with trace organics, (PROBABLE FILL)							
		A-2, Brown silty fine SAND, (PROBABLE FILL)							
5		Rec. = 1.3 ft			7-11-11-13 (22)				
10		Rec. = 0.4 ft			9-12-11-11 (23)				
		A-2, Brown silty fine SAND with trace gravel							
15		Rec. = 1.3 ft			5-7-7-11 (14)				
20		Rec. = 1.5 ft			1-1-2-3 (3)				
		Orange-brown gravelly silty SAND, 24.0 ft - 34.0 ft							
25		Rec. = 1.0 ft			12-28-9-8 (37)	6.9			
30		Rec. = 1.3 ft			10-41-45-65 (83)	10.6			
		34.0 ft - 39.5 ft, Light gray, Quartzite, fine grained, slightly fractured, massive							

Notes:
1. Stratification lines represent approximate boundary between material types. Transition may be gradual.
2. N Values have not been corrected for hammer energy.
3. Water level readings have been made at times and under conditions stated. Fluctuations of groundwater may occur due to other factors than those present at the time measurements were made.

S.W. COLE ENGINEERING, INC.

BORING LOG

Middlesex Bridge Replacement Project
IM 089-2(41)
U.S. Route 2 and Interstate 89

Boring No.: B-17
Page No.: 2 of 2
SWCE Job No.: 11-0904
Checked By: CBM

Boring Crew: Nate Seguin (SWCE), Tony Martinelli (CDS)
Date Started: 10/07/11 Date Finished: 10/10/11
VTSPG NAD83: N 647354.00 ft E 1601962.00 ft
Station: Offset:
Ground Elevation: 536.5 ft

	Casing	Sampler
Type:	HW	SS
I.D.:	4 in	2.35 in
Hammer Wt:	N.A.	140 lb.
Hammer Fall:	N.A.	30 in.

Hammer/Rod Type: Auto/AWJ
Rig: CME 55 TRACK

Groundwater Observations		
Date	Depth (ft)	Notes
10/07/11		No free water obs

Depth (ft)	Strata (1)	CLASSIFICATION OF MATERIALS (Description)	Run (Dip deg.)	Core Rec. % (RQD %)	Blows/6" (N Value)	Moisture Content %	Gravel %	Sand %	Fines %
		to some faint joints, fractures at 0-65 degrees from horizontal. Hard, Severely weathered, Very good rock NQ	1R	100 (85)	Top of Bedrock @ 34.5 ft				
40		Hole stopped @ 39.0 ft							
45									
50									
55									
60									
65									

Notes:
1. Stratification lines represent approximate boundary between material types. Transition may be gradual.
2. N Values have not been corrected for hammer energy.
3. Water level readings have been made at times and under conditions stated. Fluctuations of groundwater may occur due to other factors than those present at the time measurements were made.

PROJECT NAME: MIDDLESEX
PROJECT NUMBER: IM 089-2(41)

FILE NAME: z07a052bdrborlog.dgn
PROJECT LEADER: R. HEBERT
DESIGNED BY: S.W. COLE - CBM
BORING LOG - 17

PLOT DATE: 1/3/2015
DRAWN BY: S. MORGAN
CHECKED BY: J. OLUND
SHEET 65 OF 154

S.W. COLE ENGINEERING, INC.

BORING LOG

Middlesex Bridge Replacement Project
IM 089-2(41)
U.S. Route 2 and Interstate 89

Boring No.: B-18
Page No.: 1 of 1
SWCE Job No.: 11-0904
Checked By: CBM

Boring Crew: Nate Seguin (SWCE), Tony Martinelli (CDS)
Date Started: 10/12/11 Date Finished: 10/12/11
VTSPG NAD83: N 647346.00 ft E 1602131.00 ft
Station: Offset:
Ground Elevation: 503.0 ft

	Casing	Sampler
Type:	HW	SS
I.D.:	4 in	2.35 in
Hammer Wt:	N.A.	140 lb.
Hammer Fall:	N.A.	30 in.
Hammer/Rod Type:	Auto/AWJ	
Rig:	CME 55 TRACK	

Groundwater Observations

Date	Depth (ft)	Notes
10/12/11		No free water obs

Depth (ft)	Strata (1)	CLASSIFICATION OF MATERIALS (Description)	Run (Dip deg.)	Core Rec. % (RQD %)	Blows/6" (N Value)	Moisture Content %	Gravel %	Sand %	Fines %
		A-4/A-5, Brown SILT with some organics, fine sand and trace gravel, Rec. = 1.7 ft			1-12"-1-2				
		A-4/A-5, Brown SILT with trace organics and fine sand							
5		A-4/A-5, Brown SILT with trace fine sand Rec. = 1.7 ft			WOH-1-1-2 (2)	33.0		12.2	87.8
		A-4/A-5, Brown SILT with some fine sand							
10		A-2, Brown silty SAND with some gravel and frequent cobbles Rec. = 1.3 ft			13-24-34-46 (58)				
		Boulders, 13.8 ft - 15.3 ft NQ	1R	(71)	Top of Bedrock @ 13.8 ft				
15		15.3 ft - 19.0 ft, Medium gray, Quartzite Schist, fine grained with medium grained quartz veins, sulfide minerals present in fractures, moderately fractured, fractures at 0-70 degrees from horizontal. Severely weathered, Fair rock							
20		Hole stopped @ 19.0 ft							
25									
30									

Notes:
1. Stratification lines represent approximate boundary between material types. Transition may be gradual.
2. N Values have not been corrected for hammer energy.
3. Water level readings have been made at times and under conditions stated. Fluctuations of groundwater may occur due to other factors than those present at the time measurements were made.

PROJECT NAME: MIDDLESEX
PROJECT NUMBER: IM 089-2(41)

FILE NAME: z07a052bdrborlog.dgn
PROJECT LEADER: R. HEBERT
DESIGNED BY: S.W. COLE - CBM
BORING LOG - 18

PLOT DATE: 1/3/2015
DRAWN BY: S. MORGAN
CHECKED BY: J. OLUND
SHEET 66 OF 154

S.W. COLE ENGINEERING, INC.

BORING LOG

Middlesex Bridge Replacement Project
IM 089-2(41)
U.S. Route 2 and Interstate 89

Boring No.: B-19
Page No.: 1 of 1
SWCE Job No.: 11-0904
Checked By: CBM

Boring Crew: Nate Seguin (SWCE), Tony Martinelli (CDS)
Date Started: 10/13/11 Date Finished: 10/13/11
VTSPG NAD83: N 647478.00 ft E 1602282.00 ft
Station: Offset:
Ground Elevation: 526.5 ft

	Casing	Sampler
Type:	HW	SS
I.D.:	4 in	2.35 in
Hammer Wt:	N.A.	140 lb.
Hammer Fall:	N.A.	30 in.

Hammer/Rod Type: Auto/AWJ
Rig: CME 55 TRACK

Groundwater Observations

Date	Depth (ft)	Notes
10/13/11		No free water obs

Depth (ft)	Strata (1)	CLASSIFICATION OF MATERIALS (Description)	Run (Dip deg.)	Core Rec. % (RQD %)	Blows/6" (N Value)	Moisture Content %	Gravel %	Sand %	Fines %
		Bituminous PAVEMENT, 0.0 ft – 0.5 ft							
		Cobble or pavement, 0.5 ft – 0.7 ft							
		A-2, Brown gravelly silty SAND, (PROBABLE FILL) Rec. = 1.2 ft			7-16-16-20 (32)	6.3	33.0	49.1	17.9
5		Rec. = 1.5 ft			8-7-3-3 (10)	24.5	1.0	23.7	75.3
		A-4/A-5, Gray-brown fine sandy SILT							
10		Rec. = 1.2 ft			2-5-20-50-1"				
		A-2, Orange-brown silty fine SAND with trace gravel							
15		11.5 ft – 16.5 ft, Medium gray, Quartzite, fine grained, slightly fractured, massive, fractures at 0-70 degrees from horizontal. Hard, Very slightly weathered, Excellent, NQ	1R	100 (96)	Top of Bedrock @ 11.5 ft				
		Hole stopped @ 16.5 ft							
20									
25									
30									

Notes:
1. Stratification lines represent approximate boundary between material types. Transition may be gradual.
2. N Values have not been corrected for hammer energy.
3. Water level readings have been made at times and under conditions stated. Fluctuations of groundwater may occur due to other factors than those present at the time measurements were made.

PROJECT NAME: MIDDLESEX
PROJECT NUMBER: IM 089-2(41)

FILE NAME: z07a052bdrborlog.dgn
PROJECT LEADER: R. HEBERT
DESIGNED BY: S.W. COLE - CBM
BORING LOG - 19

PLOT DATE: 1/3/2015
DRAWN BY: S. MORGAN
CHECKED BY: J. OLUND
SHEET 67 OF 154

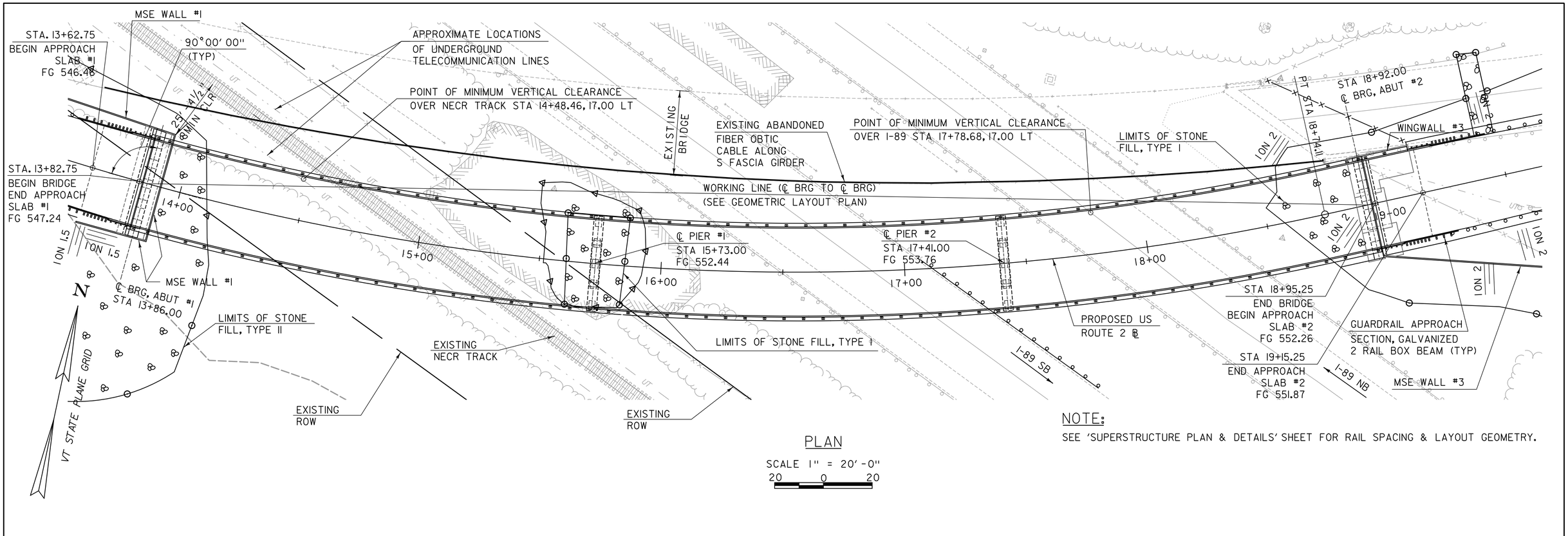

PLAN

SCALE 1" = 20'-0"
20 0 20

NOTE:
SEE 'SUPERSTRUCTURE PLAN & DETAILS' SHEET FOR RAIL SPACING & LAYOUT GEOMETRY.

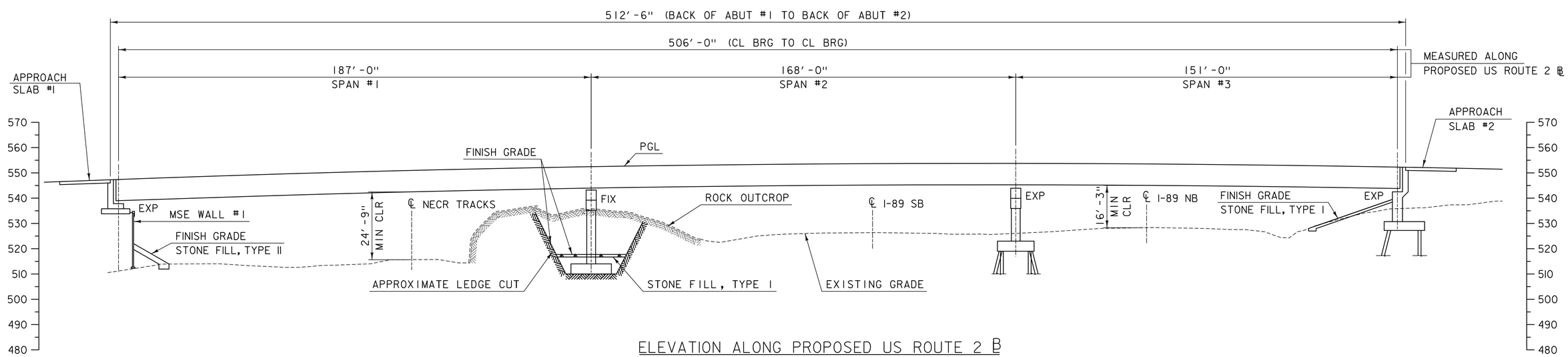

ELEVATION ALONG PROPOSED US ROUTE 2 B

SCALE 1" = 20'-0"
20 0 20

PROJECT NAME: MIDDLESEX	
PROJECT NUMBER: IM 089-2(41)	
FILE NAME: z07a052bdrgpe.dgn	PLOT DATE: 1/3/2015
PROJECT LEADER: R. HEBERT	DRAWN BY: S. MORGAN
DESIGNED BY: J. OLUND	CHECKED BY: R. HEBERT
BRIDGE PLAN & ELEVATION	SHEET 68 OF 154

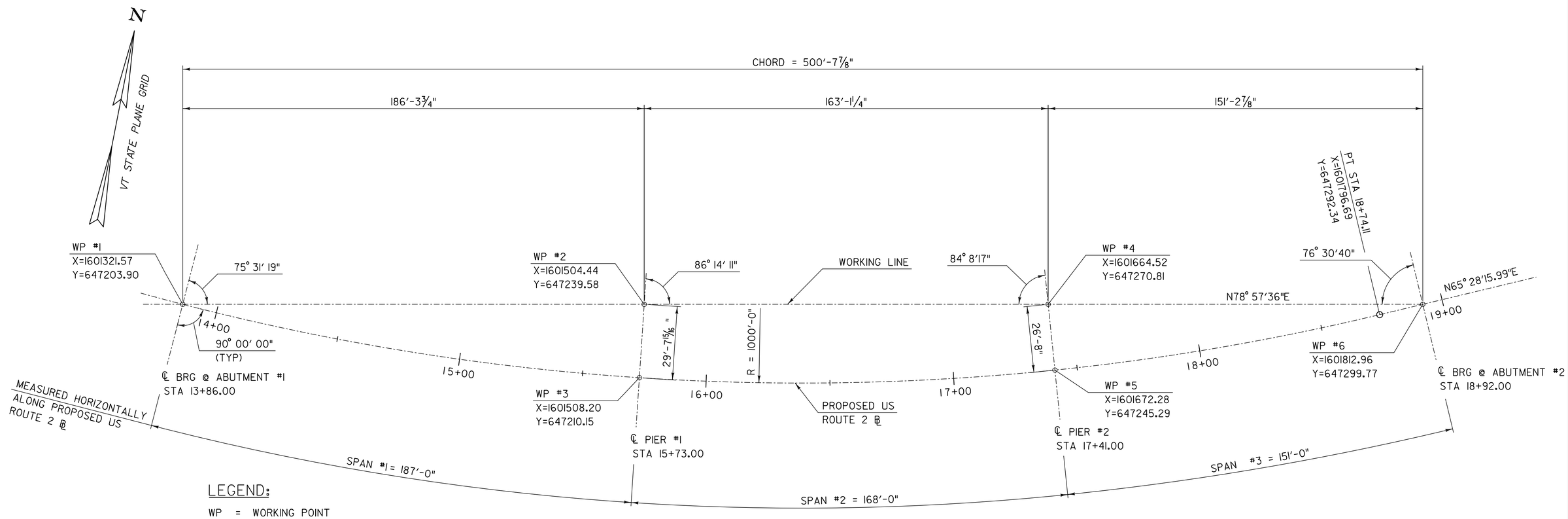

LEGEND:

WP = WORKING POINT

GEOMETRIC LAYOUT PLAN

SCALE: 1" = 20'-0"

PROJECT NAME:	MIDDLESEX
PROJECT NUMBER:	IM 089-2(41)

FILE NAME: z07a052bdrgeomplan.dgn	PLOT DATE: 1/3/2015
PROJECT LEADER: R. HEBERT	DRAWN BY: S. MORGAN
DESIGNED BY: J. OLUND	CHECKED BY: R. HEBERT
GEOMETRIC LAYOUT PLAN	SHEET 69 OF 154

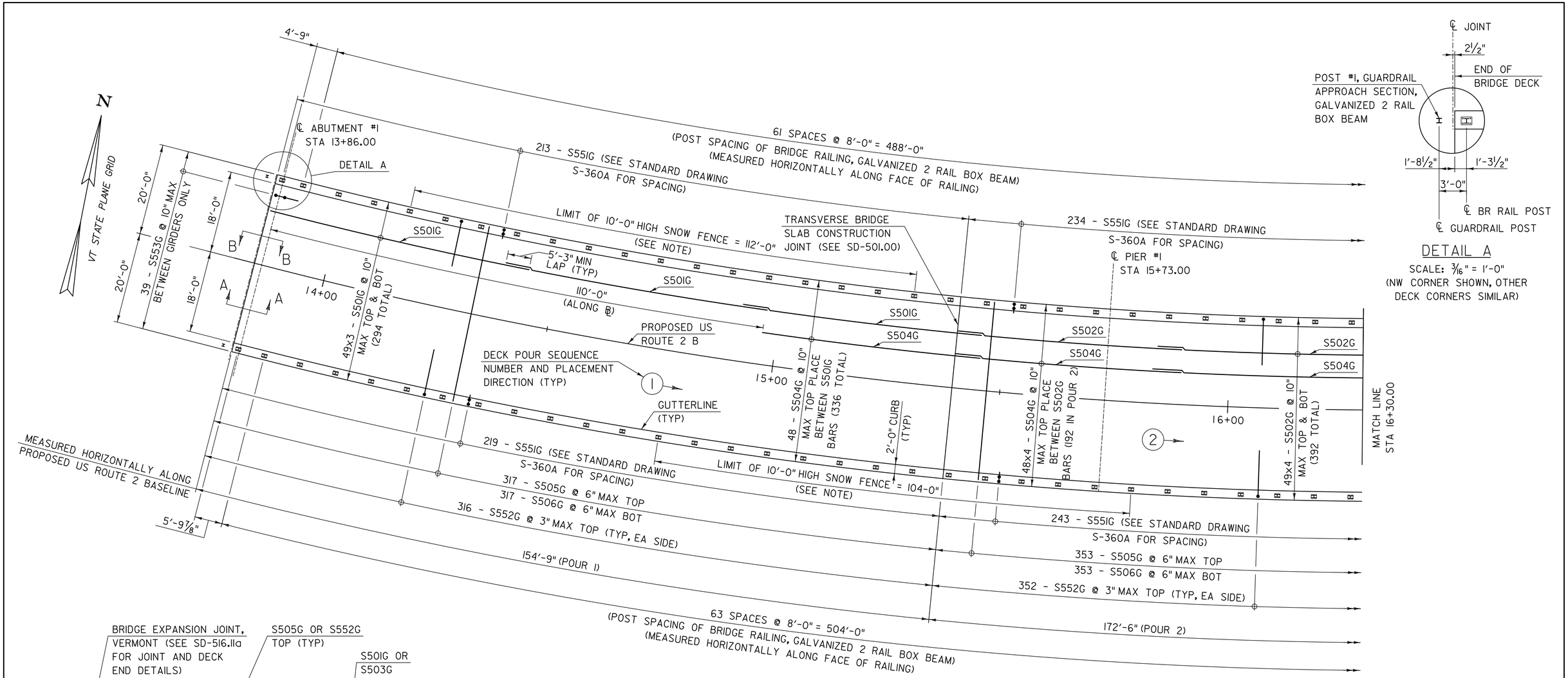

SUPERSTRUCTURE PLAN

SCALE: 3/32" = 1'-0"

DETAIL A

SCALE: 3/16" = 1'-0"
(NW CORNER SHOWN, OTHER
DECK CORNERS SIMILAR)

NOTE: 3'-0" HIGH SNOW FENCE SHALL BE PROVIDED FOR THE FULL LENGTH OF THE BRIDGE RAILINGS EXCEPT 10'-0" HIGH SNOW FENCE SHALL BE PROVIDED OVER THE EXISTING NECR TRACK. THE 10'-0" HIGH SNOW FENCE SHALL EXTEND A MINIMUM OF 19'-0" NORMAL TO THE CENTERLINE OF THE EXISTING NECR TRACK.

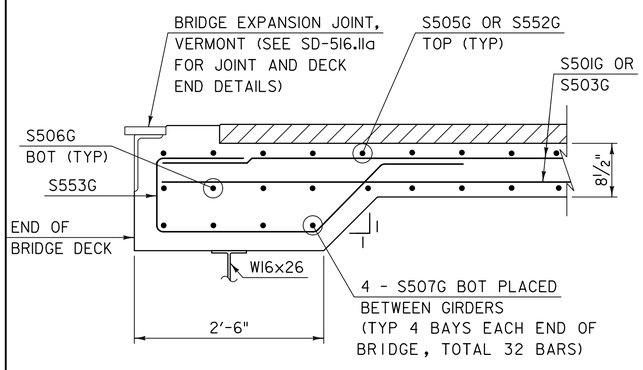

SECTION A-A

SCALE: 1" = 1'-0"

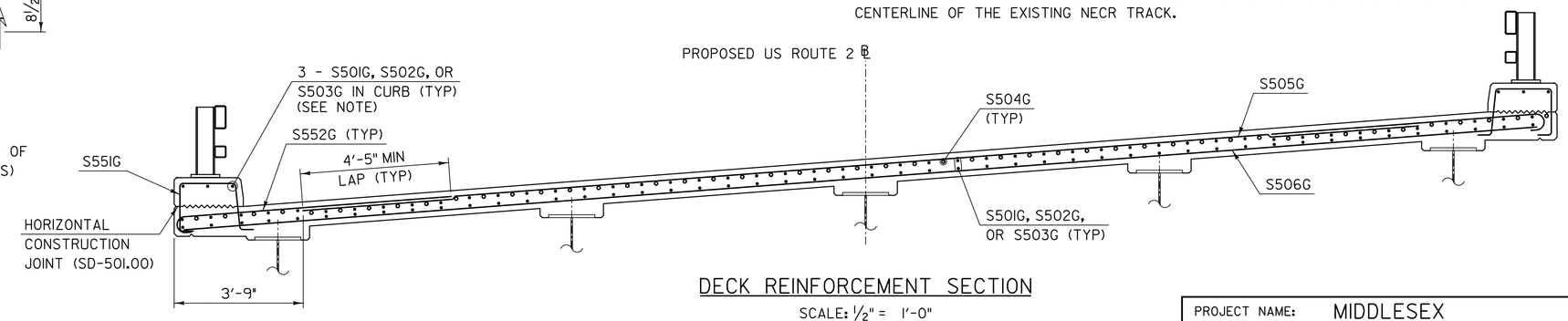

DECK REINFORCEMENT SECTION

SCALE: 1/2" = 1'-0"

NOTE: PROVIDE 3 CONTINUOUS RUNS OF LONGITUDINAL BARS IN THE TOP OF EACH CURB FOR A TOTAL OF 18 S501G, 24 S502G, AND 24 S503G BARS. LONGITUDINAL CURB BARS ARE NOT SHOWN OR QUANTIFIED IN PLAN FOR CLARITY.

NOTE: SEE "SUPERSTRUCTURE PLAN & DETAILS 2" SHEET FOR ADDITIONAL NOTES AND DETAILS.

PROJECT NAME: MIDDLESEX	
PROJECT NUMBER: IM 089-2(41)	
FILE NAME: z07a052bdrsupl.dgn	PLOT DATE: 1/3/2015
PROJECT LEADER: R. HEBERT	DRAWN BY: S. MORGAN
DESIGNED BY: J. OLUND	CHECKED BY: D. MYERS
SUPERSTRUCTURE PLAN & DETAILS 1	SHEET 70 OF 154

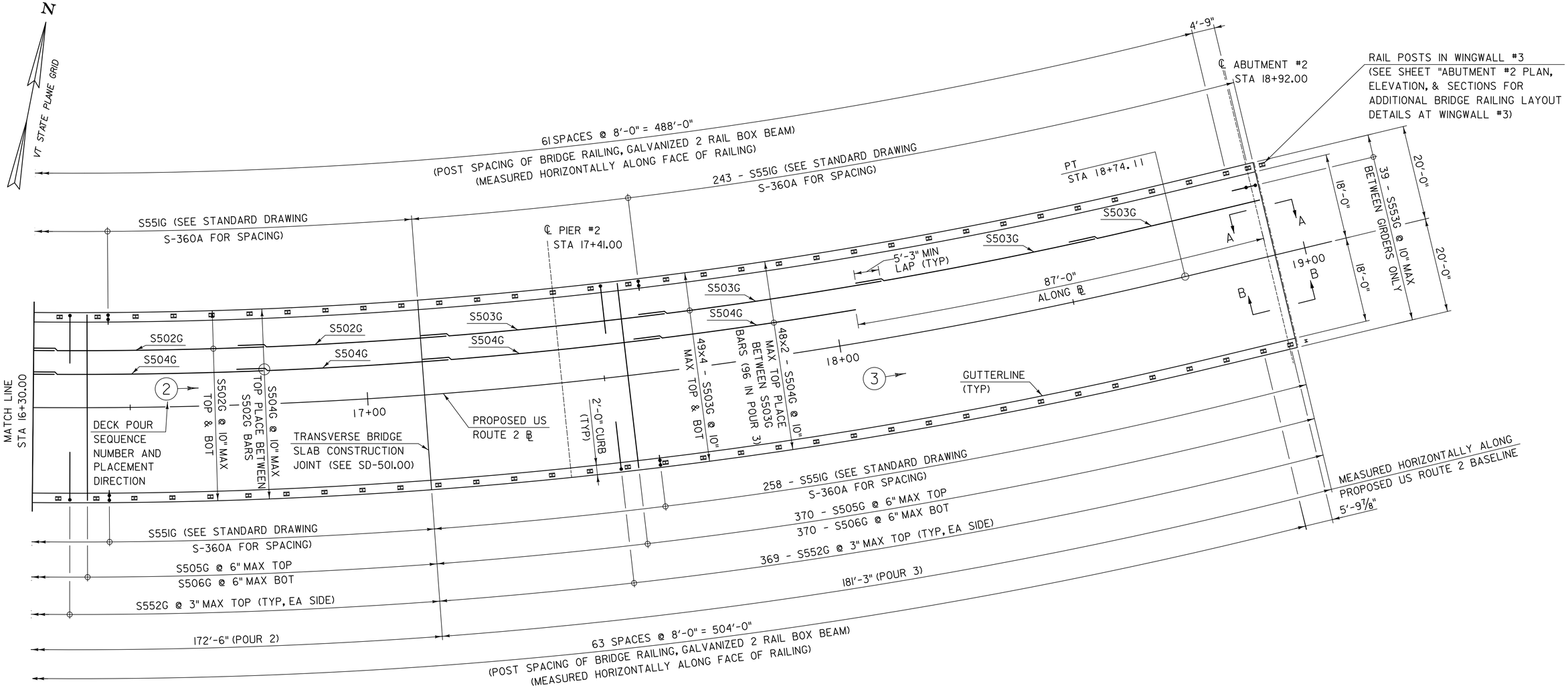

SUPERSTRUCTURE PLAN

SCALE: 3/32" = 1'-0"

CE SHALL BE PROVIDED FOR THE FULL LENGTH OF THE BRIDGE RAILINGS
NOW FENCE SHALL BE PROVIDED OVER THE EXISTING NECR TRACK.
FENCE SHALL EXTEND A MINIMUM OF 19'-0" NORMAL TO THE
EXISTING NECR TRACK.

JOINT GAP DIMENSION TABLE ("A")

TEMP (°F)	ABUT 1	ABUT 2
105	1 1/8"	1/2"
90	1 3/8"	7/8"
75	1 9/16"	1 1/4"
60	1 13/16"	1 5/8"
45	2"	2"
30	2 3/16"	2 3/8"
15	2 7/16"	2 3/4"
0	2 5/8"	3 1/8"
-15	2 7/8"	3 1/2"

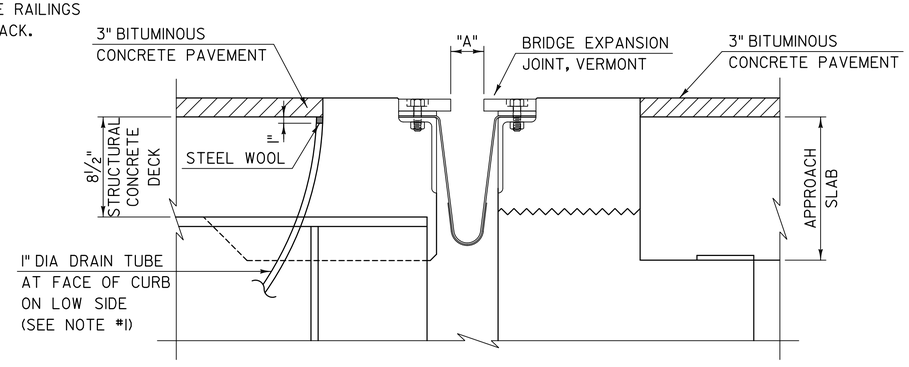

SECTION B-B

SCALE: 1 1/2" = 1'-0"

NOTES:

1. 1" DIAMETER PLASTIC DRAIN TUBE (SUBSECTION 740.01) SHALL BE INSTALLED AT THE FACE OF CURB. THE UPPER END IS TO BE PLUGGED WITH STEEL WOOL AND THE LOWER END IS TO EXTEND BELOW THE BOTTOM OF THE ADJACENT BEAM. STEEL WOOL MATERIAL SHALL BE APPROVED BY THE ENGINEER. THE DRAIN TUBES SHALL BE SECURED USING A METHOD APPROVED BY THE ENGINEER.
2. STEEL WOOL AND DRAIN TUBE SHALL BE PAID FOR UNDER ADJACENT CONCRETE ITEMS (DECK OR ABUTMENT).
3. SEE SD-516.11a AND SD-516.11b FOR BRIDGE EXPANSION JOINT, VERMONT DETAILS.
4. SEE S-360A FOR BRIDGE RAILING, GALVANIZED 2 RAIL BOX BEAM DETAILS.
5. SEE SD-502.00 FOR CONCRETE CURB JOINT DETAILS.
6. SEE "SUPERSTRUCTURE PLAN & DETAILS 1" SHEET FOR ADDITIONAL DETAILS.

PROJECT NAME: MIDDLESEX
PROJECT NUMBER: IM 089-2(41)

FILE NAME: z07a052bdrsup2.dgn
PROJECT LEADER: R. HEBERT
DESIGNED BY: J. OLUND
SUPERSTRUCTURE PLAN & DETAILS 2

PLOT DATE: 1/3/2015
DRAWN BY: S. MORGAN
CHECKED BY: D MYERS
SHEET 71 OF 154

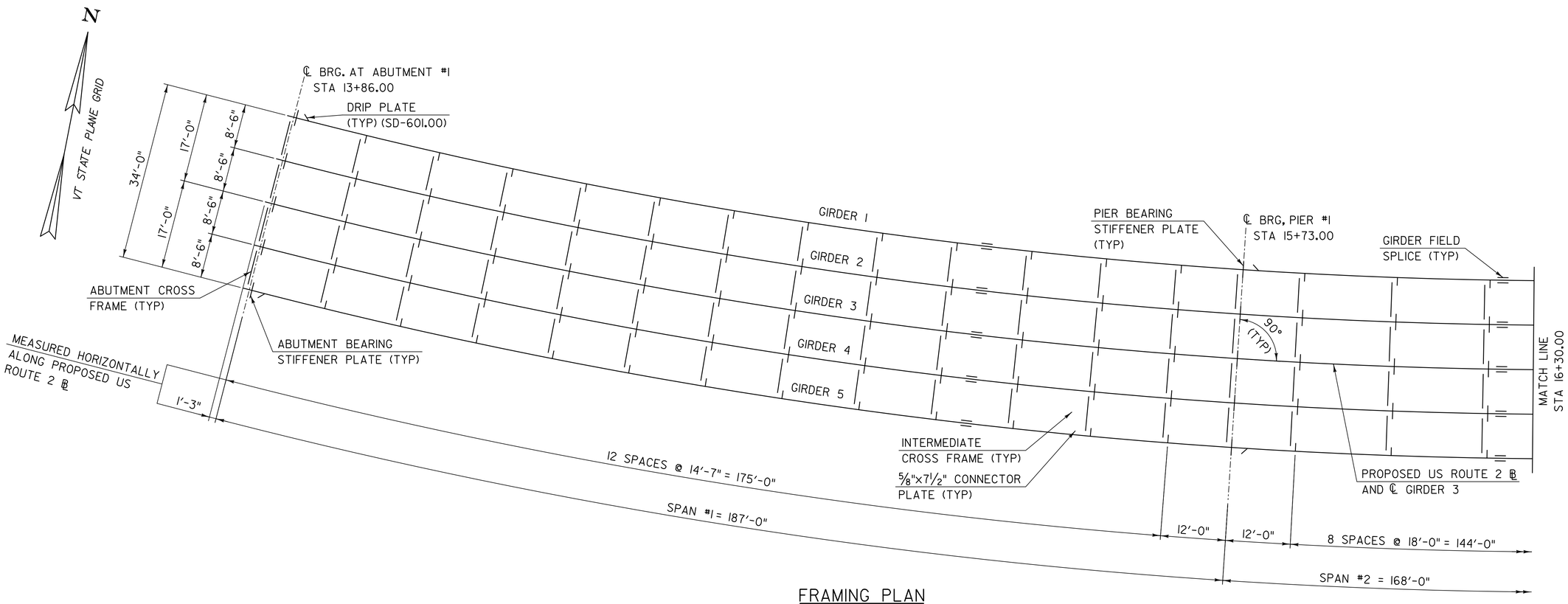

FRAMING PLAN

SCALE: 3/32 " = 1'-0"

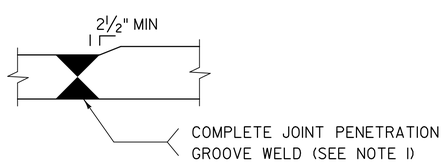

FLANGE TRANSITION BUTT WELD

NOT TO SCALE

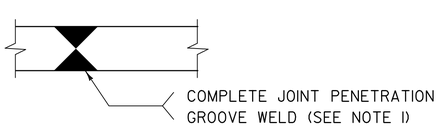

FLANGE OR WEB BUTT WELD

NOT TO SCALE

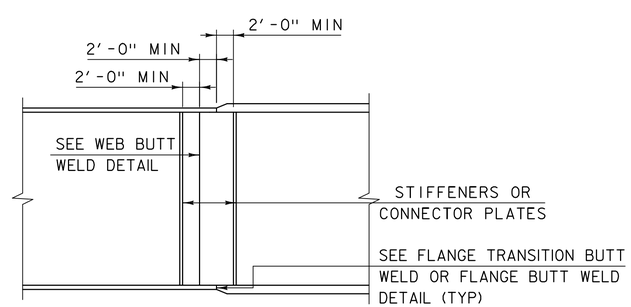

WELDED SPLICE TRANSITION

NOT TO SCALE

NOTES:

1. BUTT WELDS AT WEB AND FLANGE SPLICES SHALL BE GROUND SMOOTH AND FLUSH IN LONGITUDINAL DIRECTION OF GIRDER.
2. SEE SD-601.00 AND SD-602.00 FOR ADDITIONAL STRUCTURAL STEEL DETAILS AND NOTES.

PROJECT NAME: MIDDLESEX	
PROJECT NUMBER: IM 089-2(41)	
FILE NAME: z07a052bdrsup3.dgn	PLOT DATE: 1/3/2015
PROJECT LEADER: R. HEBERT	DRAWN BY: S. MORGAN
DESIGNED BY: G. SRIPATHY	CHECKED BY: J. OLUND
FRAMING PLAN & GIRDER DETAILS 1	SHEET 72 OF 154

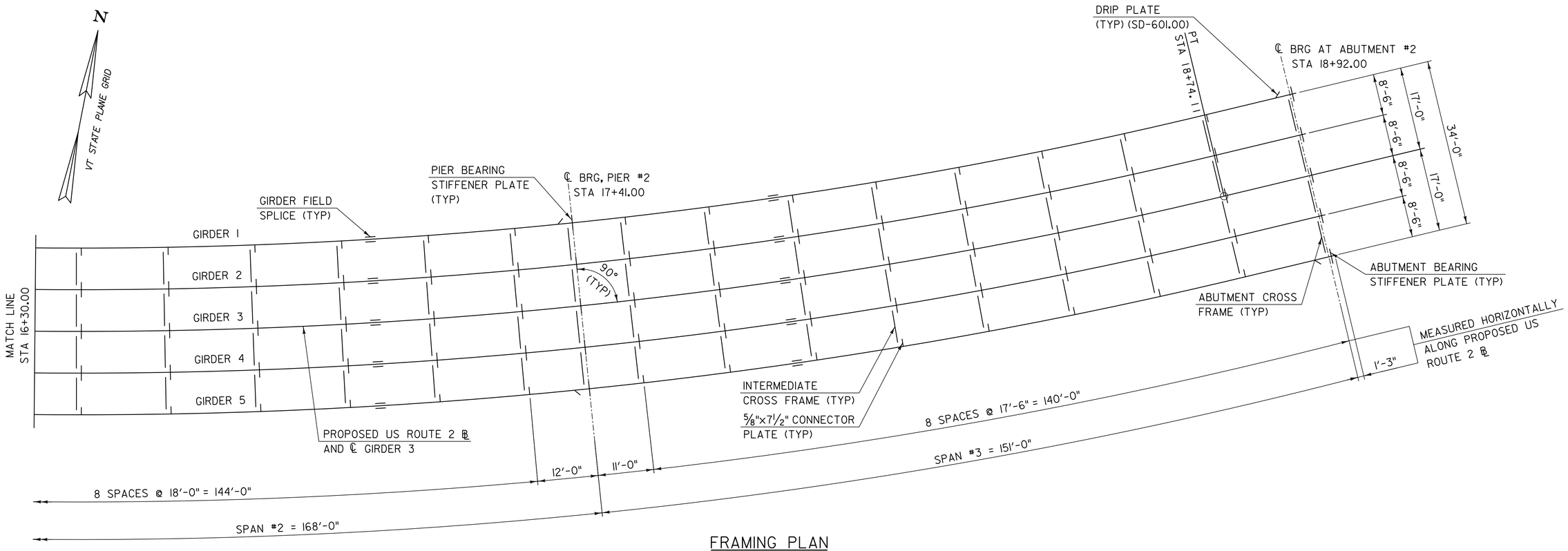

FRAMING PLAN

SCALE: 3/32 " = 1'-0"

PROJECT NAME:	MIDDLESEX
PROJECT NUMBER:	IM 089-2(41)

FILE NAME: z07a052bdrsup4.dgn	PLOT DATE: 1/3/2015
PROJECT LEADER: R. HEBERT	DRAWN BY: S. MORGAN
DESIGNED BY: G. SRIPATHY	CHECKED BY: J. OLUND
FRAMING PLAN & GIRDER DETAILS 2	SHEET 73 OF 154

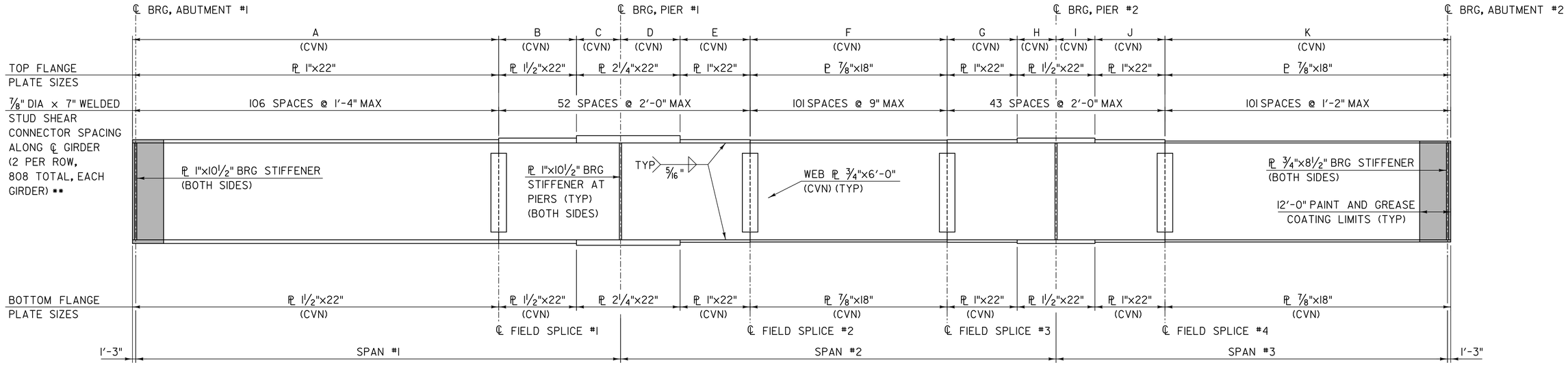

GIRDERS 1 - 3 - ELEVATION

NOT TO SCALE

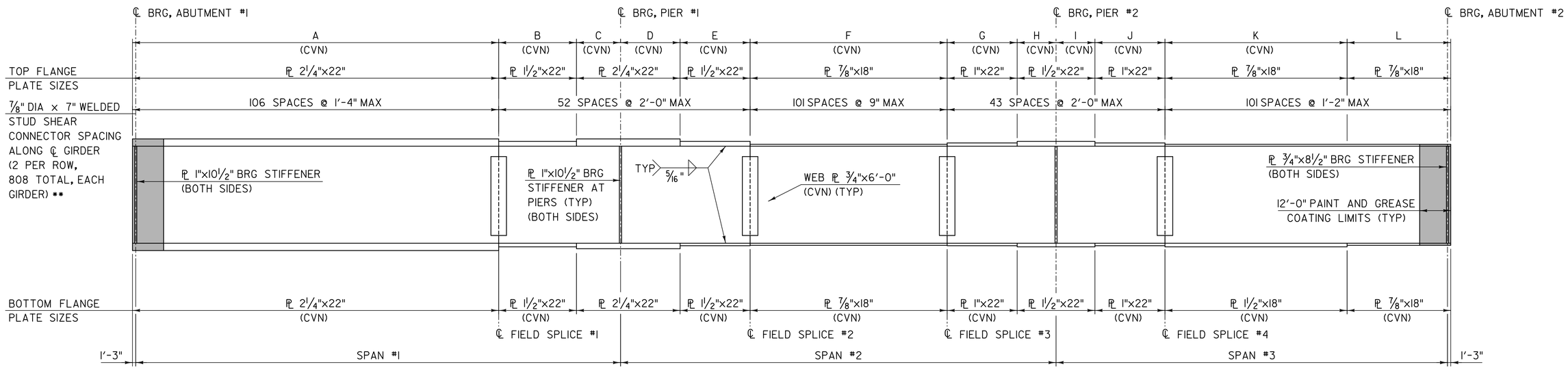

GIRDERS 4 & 5 - ELEVATION

NOT TO SCALE

TABLE OF GIRDER DIMENSIONS *

GIRDER	RADIUS	A	B	C	D	E	F	G	H	I	J	K	L	SPAN 1	SPAN 2	SPAN 3	TOTAL GIRDER LENGTH
1	983'-0"	135'-11 11/16"	32'-5 1/4"	16'-8 9/16"	23'-7 1/8"	27'-0 3/8"	73'-2 13/16"	25'-6 11/16"	15'-8 3/4"	14'-8 15/16"	26'-6 1/2"	108'-8 7/16"	-	183'-9 7/8"	165'-1 3/4"	148'-8 7/8"	500'-2 7/16"
2	991'-6"	137'-1"	32'-8 5/8"	16'-10 1/4"	23'-9 9/16"	27'-3 3/16"	73'-10 3/8"	25'-9 3/8"	15'-10 3/8"	14'-10 1/2"	26'-9 1/4"	109'-5 11/16"	-	185'-4 15/16"	166'-6 7/8"	149'-10 7/16"	504'-4 3/16"
3	1000'-0"	138'-3"	33'-0"	17'-0"	24'-0"	27'-6"	74'-6"	26'-0"	16'-0"	15'-0"	27'-0"	110'-3"	-	187'-0"	168'-0"	151'-0"	508'-6"
4	1008'-6"	139'-5"	33'-3 3/8"	17'-1 3/4"	24'-2 7/16"	27'-8 13/16"	75'-1 5/8"	26'-2 5/8"	16'-1 5/8"	15'-1 1/2"	27'-2 3/4"	79'-8 1/16"	31'-4 3/16"	188'-7 1/16"	169'-5 1/8"	152'-1 9/16"	512'-7 13/16"
5	1017'-0"	140'-6 15/16"	33'-6 3/4"	17'-3 7/16"	24'-4 7/8"	27'-11 5/8"	75'-9 3/16"	26'-5 5/16"	16'-3 1/4"	15'-3 1/16"	27'-5 1/2"	80'-4 1/16"	31'-5 1/2"	190'-2 1/8"	170'-10 1/4"	153'-3 1/8"	516'-9 9/16"

* GIRDER DIMENSIONS ARE MEASURED HORIZONTALLY ALONG THE CENTERLINE OF THE RESPECTIVE GIRDER WITHOUT ACCOUNT FOR VERTICAL GRADE.

** STUDS SHALL PROJECT A MINIMUM OF 2" ABOVE THE BOTTOM OF THE SLAB. SHEAR CONNECTORS SHALL NOT BE WELDED TO FIELD SPLICE PLATES. SHEAR CONNECTORS DETAILED OVER FIELD SPLICE PLATES SHALL BE RELOCATED ADJACENT TO THE FIELD SPLICE PLATES. PROVIDE A MINIMUM OF 4" BETWEEN ADJACENT SHEAR CONNECTORS AND/OR SHEAR CONNECTORS AND FIELD SPLICE PLATES.

PROJECT NAME: MIDDLESEX
PROJECT NUMBER: IM 089-2(41)

FILE NAME: z07a052bdrsup5.dgn
PROJECT LEADER: R. HEBERT
DESIGNED BY: G. SRIPATHY
GIRDER ELEVATIONS

PLOT DATE: 1/3/2015
DRAWN BY: S. MORGAN
CHECKED BY: J. OLUND
SHEET 74 OF 154

FIELD SPLICE GEOMETRY - GIRDERS 1- 3				
	F.S. #1	F.S. #2	F.S. #3	F.S. #4
TOP FLANGE OUTER SPLICE PL	L 7/8" × 1'-10"	L 1/2" × 1'-6"	L 1/2" × 1'-6"	L 1/2" × 1'-6"
TOP FLANGE INNER SPLICE PL	L 7/8" × 8 1/2"	L 1/2" × 5 3/4"	L 1/2" × 5 3/4"	L 1/2" × 5 3/4"
TOP FLANGE FILL PL	-	L 1/8" × 1'-6"	L 1/8" × 1'-6"	L 1/8" × 1'-6"
BOTTOM FLANGE OUTER SPLICE PL	L 7/8" × 1'-10"	L 1/2" × 1'-6"	L 1/2" × 1'-6"	L 1/2" × 1'-6"
BOTTOM FLANGE INNER SPLICE PL	L 7/8" × 8 1/2"	L 1/2" × 5 3/4"	L 1/2" × 5 3/4"	L 1/2" × 5 3/4"
BOTTOM FLANGE FILL PL	L 1/2" × 1'-10"	L 1/8" × 1'-6"	L 1/8" × 1'-6"	L 1/8" × 1'-6"
B_{TOP}	5	4	4	4
B_{BOT}	5	4	4	4
N_{TOP}	2	1	1	1
N_{BOT}	2	1	1	1

FIELD SPLICE GEOMETRY - GIRDERS 4 & 5				
	F.S. #1	F.S. #2	F.S. #3	F.S. #4
TOP FLANGE OUTER SPLICE PL	L 7/8" × 1'-10"	L 3/4" × 1'-6"	L 1/2" × 1'-6"	L 1/2" × 1'-6"
TOP FLANGE INNER SPLICE PL	L 7/8" × 8 1/2"	L 3/4" × 5 3/4"	L 1/2" × 5 3/4"	L 1/2" × 5 3/4"
TOP FLANGE FILL PL	L 3/8" × 1'-10"	L 5/8" × 1'-6"	L 1/8" × 1'-6"	L 1/8" × 1'-6"
BOTTOM FLANGE OUTER SPLICE PL	L 7/8" × 1'-10"	L 3/4" × 1'-6"	L 1/2" × 1'-6"	L 3/4" × 1'-6"
BOTTOM FLANGE INNER SPLICE PL	L 7/8" × 8 1/2"	L 3/4" × 5 3/4"	L 1/2" × 5 3/4"	L 3/4" × 5 3/4"
BOTTOM FLANGE FILL PL	L 3/4" × 1'-10"	L 5/8" × 1'-6"	L 1/8" × 1'-6"	L 1/2" × 1'-6"
B_{TOP}	7	6	4	4
B_{BOT}	7	7	4	8
N_{TOP}	2	1	1	1
N_{BOT}	2	1	1	1

NOTES:

1. ALL FIELD SPLICE PLATES SHALL BE CHARPY V-NOTCH TESTED IN ACCORDANCE WITH SUBSECTION 714.01 OF THE STANDARD SPECIFICATIONS.
2. NUTS SHALL BE INSIDE FACE OF WEB FASCIA GIRDERS.
3. NUTS SHALL BE UP ON ALL FLANGE SPLICES.

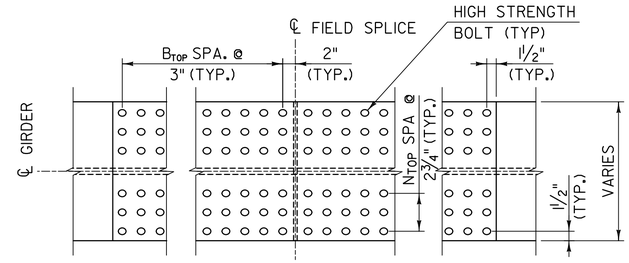

TOP FLANGE OUTER SPLICE

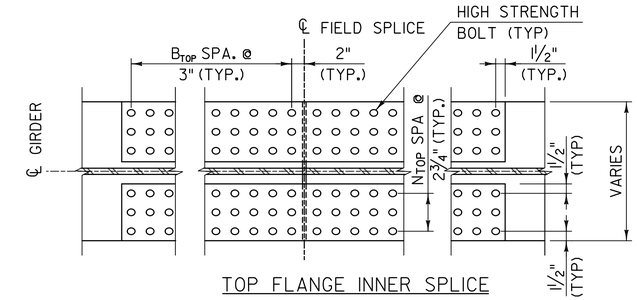

TOP FLANGE INNER SPLICE

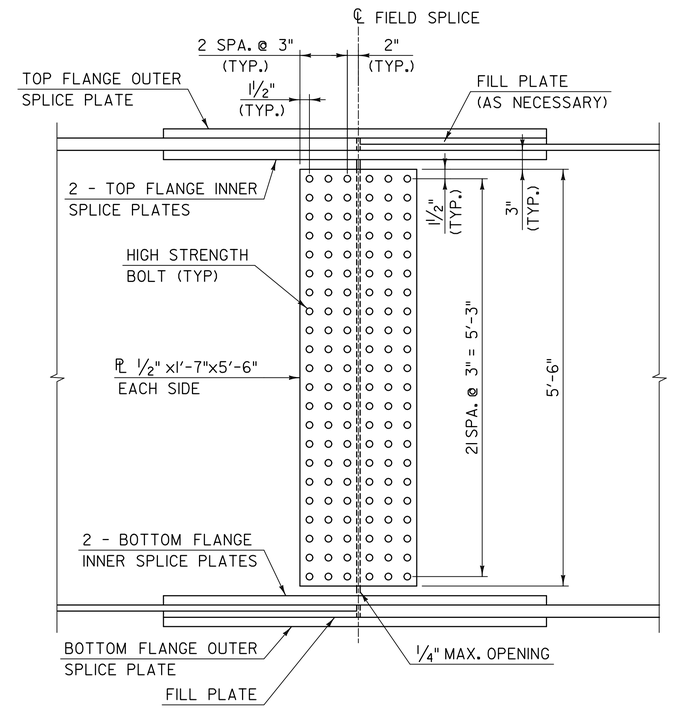

ELEVATION

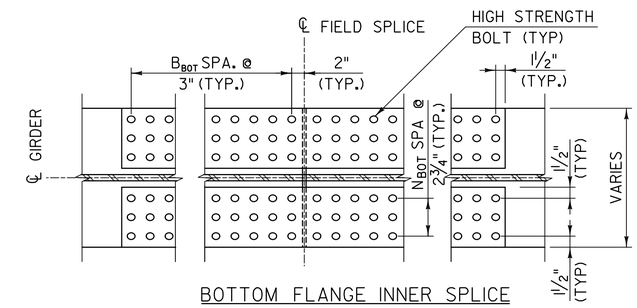

BOTTOM FLANGE INNER SPLICE

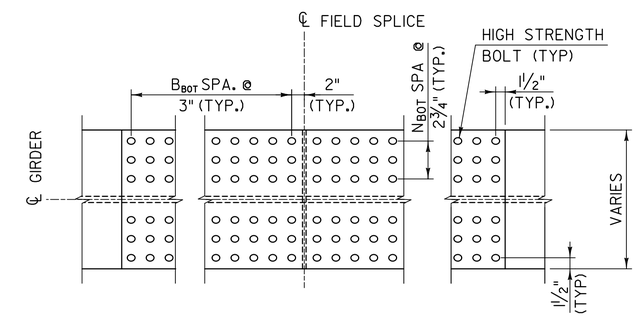

BOTTOM FLANGE OUTER SPLICE

SPLICE DETAILS

NOT TO SCALE

PROJECT NAME: MIDDLESEX	
PROJECT NUMBER: IM 089-2(41)	
FILE NAME: z07a052bdrsup6.dgn	PLOT DATE: 1/3/2015
PROJECT LEADER: R. HEBERT	DRAWN BY: S. MORGAN
DESIGNED BY: G. SRIPATHY	CHECKED BY: J. OLUND
FIELD SPLICE DETAILS	SHEET 75 OF 154

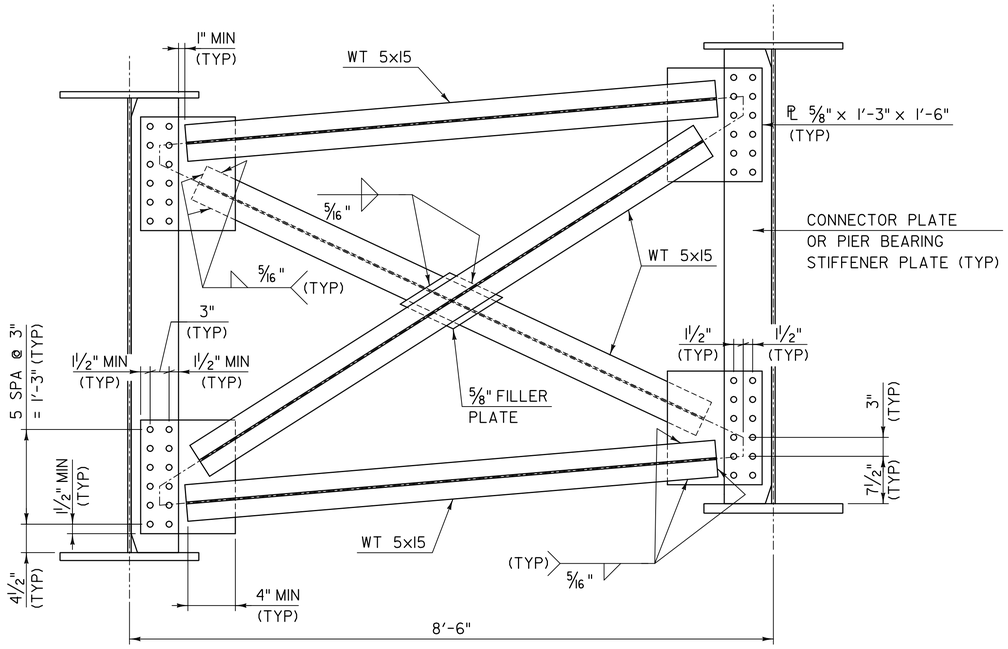

INTERMEDIATE CROSS FRAME

SCALE: 1" = 1'-0"

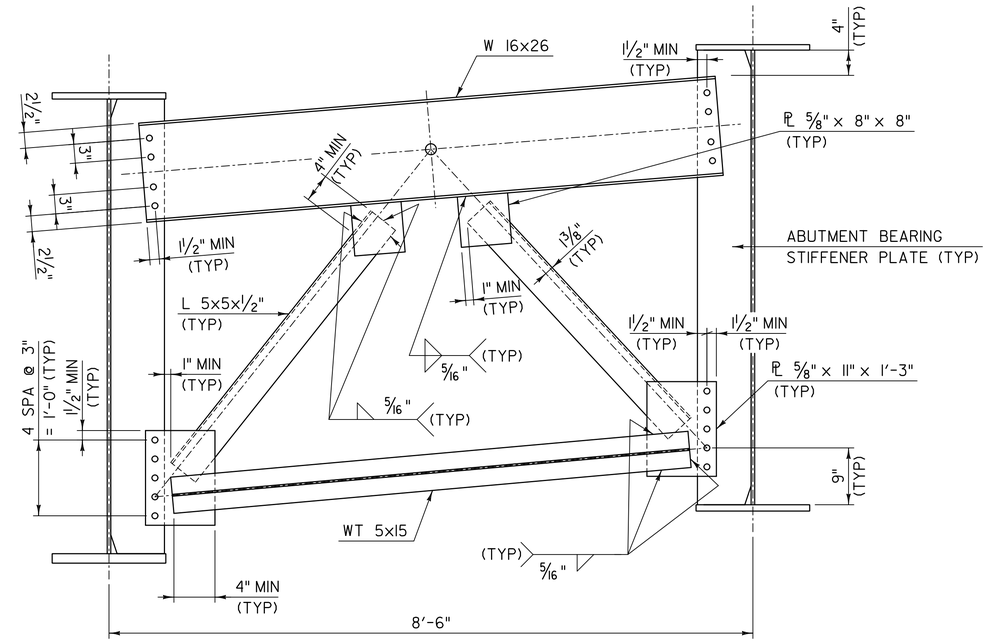

ABUTMENT CROSS FRAME

SCALE: 1" = 1'-0"

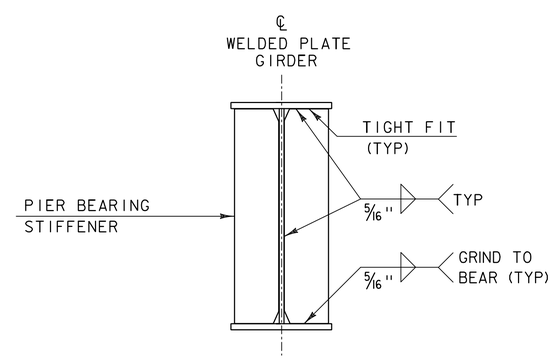

PIER BEARING STIFFENERS DETAIL

NOT TO SCALE

NOTE: ALL CROSS FRAME MEMBERS, GUSSET PLATES, CONNECTOR PLATES, AND BEARING STIFFENER PLATES SHALL BE CHARPY V-NOTCH TESTED IN ACCORDANCE WITH SUBSECTION 714.01.

PROJECT NAME: MIDDLESEX	
PROJECT NUMBER: IM 089-2(41)	
FILE NAME: z07a052bdrsup7.dgn	PLOT DATE: 1/3/2015
PROJECT LEADER: R. HEBERT	DRAWN BY: S. MORGAN
DESIGNED BY: G. SRIPATHY	CHECKED BY: J. OLUND
CROSS FRAME DETAILS	SHEET 76 OF 154

DEFLECTION DIAGRAM
NOT TO SCALE

CAMBER DIAGRAM
NOT TO SCALE

TABLE OF CAMBER OFFSET DIMENSIONS

GIRDER	"P1"	"P2"	"A2"
1	5'-0 15/16"	6'-4 3/4"	5'-4 13/16"
2	5'-0 15/16"	6'-4 3/4"	5'-2 3/16"
3	5'-0 15/16"	6'-4 3/4"	4'-11 1/2"
4	5'-0 15/16"	6'-4 3/4"	4'-8 7/8"
5	5'-0 15/16"	6'-4 3/4"	4'-6 3/16"

NOTES:

1. DIMENSIONS SHOWN ARE ALONG THE ARC OF THE CL OF THE GIRDER.
2. STEEL DEFLECTION IS DUE TO GIRDERS AND CROSSFRAMES.
3. SDL DEFLECTION IS DUE TO CURB, RAILING, SNOW BARRIER, AND PAVEMENT.
4. HORIZONTAL LINE IS A STRAIGHT LINE BASED ON THE ELEVATION AT THE BOTTOM OF THE WEB AT THE CL OF BEARING AT ABUTMENT #1.
5. SLAB DEFLECTION IS DUE TO DECK, HAUNCHES, AND STAY IN PLACE FORMS.
6. POSITIVE CAMBER VALUES ARE UPWARD, POSITIVE DEFLECTIONS ARE DOWNWARD.

TABLE OF DEFLECTIONS AND CAMBER ORDINATES

SPAN #1

GIRDER	LOAD TYPE	1	2	3	4	5	6	7	8	9	10	11	12	13	14	15	16	17	18
1	STEEL DEFLECTION	5/16"	9/16"	7/8"	1 1/16"	1 1/4"	1 3/8"	1 1/2"	1 9/16"	1 1/2"	1 1/2"	1 3/8"	1 1/4"	1 1/16"	7/8"	11/16"	7/16"	1/4"	1/8"
	SLAB DEFLECTION	7/8"	1 5/8"	2 3/8"	3 1/16"	3 9/16"	4"	4 1/4"	4 3/8"	4 3/8"	4 3/16"	3 15/16"	3 9/16"	3 1/16"	2 1/2"	1 15/16"	1 3/8"	13/16"	5/16"
	SDL DEFLECTION	3/16"	5/16"	1/2"	5/8"	3/4"	13/16"	7/8"	7/8"	7/8"	7/8"	13/16"	3/4"	5/8"	1/2"	3/8"	1/4"	3/16"	1/16"
	TOTAL DEFLECTION	1 5/16"	2 9/16"	3 3/4"	4 3/4"	5 9/16"	6 3/16"	6 5/8"	6 13/16"	6 13/16"	6 9/16"	6 1/8"	5 1/2"	4 3/4"	3 7/8"	2 15/16"	2 1/16"	1 3/16"	9/16"
	PROFILE CAMBER	1 1/8"	2 1/8"	3 1/16"	3 13/16"	4 7/16"	4 15/16"	5 5/16"	5 9/16"	5 11/16"	5 11/16"	5 9/16"	5 5/16"	4 15/16"	4 7/16"	3 13/16"	3 1/16"	2 1/8"	1 1/8"
	TOTAL CAMBER	2 1/2"	4 3/4"	6 3/4"	8 9/16"	10"	11 1/8"	11 15/16"	12 3/8"	12 1/2"	12 1/4"	11 11/16"	10 13/16"	9 11/16"	8 5/16"	6 3/4"	5 1/8"	3 3/8"	1 11/16"
2	STEEL DEFLECTION	3/8"	11/16"	1"	1 1/4"	1 1/2"	1 11/16"	1 13/16"	1 7/8"	1 7/8"	1 13/16"	1 11/16"	1 1/2"	1 5/16"	1 1/16"	13/16"	9/16"	3/8"	3/16"
	SLAB DEFLECTION	7/8"	1 11/16"	2 1/2"	3 1/8"	3 11/16"	4 1/8"	4 3/8"	4 9/16"	4 9/16"	4 3/8"	4 1/8"	3 3/4"	3 1/4"	2 5/8"	2 1/16"	1 3/8"	13/16"	3/8"
	SDL DEFLECTION	3/16"	3/8"	9/16"	11/16"	13/16"	7/8"	15/16"	1"	1"	15/16"	7/8"	13/16"	11/16"	9/16"	7/16"	5/16"	3/16"	1/16"
	TOTAL DEFLECTION	1 7/16"	2 3/4"	4"	5 1/8"	6"	6 11/16"	7 1/8"	7 3/8"	7 3/8"	7 1/8"	6 11/16"	6"	5 1/4"	4 5/16"	3 5/16"	2 5/16"	1 3/8"	5/8"
	PROFILE CAMBER	1 1/8"	2 1/8"	3 1/16"	3 13/16"	4 7/16"	4 15/16"	5 5/16"	5 9/16"	5 11/16"	5 11/16"	5 9/16"	5 5/16"	4 15/16"	4 7/16"	3 13/16"	3 1/16"	2 1/8"	1 1/8"
	TOTAL CAMBER	2 9/16"	4 15/16"	7 1/16"	8 7/8"	10 7/16"	11 5/8"	12 7/16"	12 15/16"	13 1/16"	12 13/16"	12 1/4"	11 5/16"	10 3/16"	8 11/16"	7 1/8"	5 5/16"	3 1/2"	1 3/4"
3	STEEL DEFLECTION	7/16"	13/16"	1 3/16"	1 1/2"	1 3/4"	1 15/16"	2 1/16"	2 3/16"	2 3/16"	2 1/8"	2"	1 13/16"	1 9/16"	1 5/16"	1"	3/4"	7/16"	3/16"
	SLAB DEFLECTION	7/8"	1 3/4"	2 1/2"	3 3/16"	3 3/4"	4 3/16"	4 1/2"	4 11/16"	4 11/16"	4 9/16"	4 1/4"	3 7/8"	3 3/8"	2 13/16"	2 3/16"	1 1/2"	7/8"	3/8"
	SDL DEFLECTION	3/16"	3/8"	9/16"	3/4"	7/8"	1"	1 1/16"	1 1/16"	1 1/16"	1 1/16"	1"	7/8"	3/4"	5/8"	1/2"	5/16"	3/16"	1/8"
	TOTAL DEFLECTION	1 1/2"	2 15/16"	4 1/4"	5 7/16"	6 3/8"	7 1/8"	7 5/8"	7 7/8"	7 15/16"	7 11/16"	7 1/4"	6 9/16"	5 11/16"	4 3/4"	3 11/16"	2 9/16"	1 9/16"	11/16"
	PROFILE CAMBER	1 1/8"	2 1/8"	3 1/16"	3 13/16"	4 7/16"	4 15/16"	5 5/16"	5 9/16"	5 11/16"	5 11/16"	5 9/16"	5 5/16"	4 15/16"	4 7/16"	3 13/16"	3 1/16"	2 1/8"	1 1/8"
	TOTAL CAMBER	2 11/16"	5 1/8"	7 5/16"	9 3/16"	10 13/16"	12 1/16"	12 15/16"	13 1/2"	13 5/8"	13 3/8"	12 13/16"	11 7/8"	10 5/8"	9 1/8"	7 1/2"	5 5/8"	3 11/16"	1 7/8"
4	STEEL DEFLECTION	1/2"	15/16"	1 5/16"	1 11/16"	2"	2 1/4"	2 3/8"	2 1/2"	2 1/2"	2 7/16"	2 5/16"	2 1/8"	1 7/8"	1 9/16"	1 1/4"	7/8"	9/16"	1/4"
	SLAB DEFLECTION	15/16"	1 3/4"	2 9/16"	3 1/4"	3 13/16"	4 5/16"	4 5/8"	4 13/16"	4 13/16"	4 11/16"	4 7/16"	4 1/16"	3 9/16"	2 15/16"	2 5/16"	1 5/8"	1"	7/16"
	SDL DEFLECTION	1/4"	7/16"	5/8"	13/16"	1"	1 1/16"	1 3/16"	1 3/16"	1 3/16"	1 3/16"	1 1/8"	1"	7/8"	3/4"	9/16"	3/8"	1/4"	1/8"
	TOTAL DEFLECTION	1 5/8"	3 1/8"	4 1/2"	5 3/4"	6 13/16"	7 5/8"	8 3/16"	8 1/2"	8 1/2"	8 5/16"	7 13/16"	7 1/8"	6 1/4"	5 1/4"	4 1/8"	2 15/16"	1 13/16"	13/16"
	PROFILE CAMBER	1 1/8"	2 1/8"	3 1/16"	3 13/16"	4 7/16"	4 15/16"	5 5/16"	5 9/16"	5 11/16"	5 11/16"	5 9/16"	5 5/16"	4 15/16"	4 7/16"	3 13/16"	3 1/16"	2 1/8"	1 1/8"
	TOTAL CAMBER	2 3/4"	5 1/4"	7 9/16"	9 9/16"	11 1/4"	12 9/16"	13 1/2"	14 1/16"	14 3/16"	14"	13 3/8"	12 7/16"	11 3/16"	9 11/16"	7 15/16"	6"	3 15/16"	1 15/16"
5	STEEL DEFLECTION	9/16"	1 1/16"	1 1/2"	1 15/16"	2 1/4"	2 9/16"	2 3/4"	2 7/8"	2 7/8"	2 13/16"	2 11/16"	2 7/16"	2 3/16"	1 13/16"	1 7/16"	1 1/16"	11/16"	5/16"
	SLAB DEFLECTION	15/16"	1 13/16"	2 5/8"	3 5/16"	3 15/16"	4 7/16"	4 3/4"	4 15/16"	4 15/16"	4 13/16"	4 9/16"	4 3/16"	3 11/16"	3 1/8"	2 7/16"	1 3/4"	1 1/16"	1/2"
	SDL DEFLECTION	1/4"	1/2"	3/4"	15/16"	1 1/8"	1 1/4"	1 5/16"	1 3/8"	1 3/8"	1 5/16"	1 1/4"	1 1/8"	1"	13/16"	5/8"	7/16"	5/16"	1/8"
	TOTAL DEFLECTION	1 3/4"	3 5/16"	4 13/16"	6 3/16"	7 5/16"	8 3/16"	8 13/16"	9 1/8"	9 3/16"	9"	8 1/2"	7 13/16"	6 7/8"	5 3/4"	4 9/16"	3 1/4"	2"	15/16"
	PROFILE CAMBER	1 1/8"	2 1/8"	3 1/16"	3 13/16"	4 7/16"	4 15/16"	5 5/16"	5 9/16"	5 11/16"	5 11/16"	5 9/16"	5 5/16"	4 15/16"	4 7/16"	3 13/16"	3 1/16"	2 1/8"	1 1/8"
	TOTAL CAMBER	2 7/8"	5 1/2"	7 7/8"	10"	11 3/4"	13 1/8"	14 1/8"	14 3/4"	14 7/8"	14 11/16"	14 1/16"	13 1/8"	11 13/16"	10 3/16"	8 3/8"	6 5/16"	4 1/8"	2 1/16"

SPAN #2

GIRDER	LOAD TYPE	1	2	3	4	5	6	7	8	9	10	11	12	13	14	15	16
1	STEEL DEFLECTION	-1/16"	-1/8"	-1/8"	-1/8"	-1/16"	0"	0"	1/16"	1/16"	1/16"	1/16"	0"	0"	-1/16"	-1/16"	-1/16"
	SLAB DEFLECTION	-3/16"	-5/16"	-5/16"	-1/4"	-1/8"	1/16"	1/4"	3/8"	7/16"	7/16"	7/16"	5/16"	1/8"	0"	-1/8"	-1/8"
	SDL DEFLECTION	0"	-1/16"	0"	0"	0"	1/16"	1/16"	1/8"	1/8"	1/8"	1/8"	1/16"	1/16"	0"	0"	0"
	TOTAL DEFLECTION	-5/16"	-7/16"	-7/16"	-3/8"	-1/8"	1/8"	3/8"	9/16"	5/8"	5/8"	9/16"	3/8"	3/16"	-1/16"	-3/16"	-3/16"
	PROFILE CAMBER	1"	1 15/16"	2 11/16"	3 5/16"	3 13/16"	4 3/16"	4 7/16"	4 9/16"	4 9/16"	4 7/16"	4 3/16"	3 13/16"	3 5/16"	2 11/16"	1 15/16"	1"
	TOTAL CAMBER	3/4"	1 7/16"	2 3/16"	3"	3 11/16"	4 5/16"	4 13/16"	5 1/8"	5 1/4"	5 1/8"	4 3/4"	4 1/4"	3 1/2"	2 5/8"	1 3/4"	7/8"
2	STEEL DEFLECTION	-1/8"	-3/16"	-1/4"	-1/4"	-1/4"	-3/16"	-1/8"	-1/8"	-1/8"	-1/16"	-1/16"	-1/8"	-1/8"	-1/8"	-1/8"	-1/16"
	SLAB DEFLECTION	-1/4"	-3/8"	-3/8"	-5/16"	-3/16"	0"	3/16"	5/16"	3/8"	3/8"	3/8"	1/4"	1/8"	-1/16"	-1/8"	-1/8"
	SDL DEFLECTION	-1/16"	-1/16"	-1/16"	-1/16"	-1/16"	0"	0"	1/16"	1/16"	1/16"	1/16"	0"	0"	0"	-1/16"	0"
	TOTAL DEFLECTION	-3/8"	-5/8"	-11/16"	-5/8"	-7/16"	-3/16"	1/16"	1/4"	5/16"	3/8"	5/16"	3/16"	-1/16"	-3/16"	-5/16"	-1/4"
	PROFILE CAMBER	1"	1 15/16"	2 11/16"	3 5/16"	3 13/16"	4 3/16"	4 7/16"	4 9/16"	4 9/16"	4 7/16"	4 3/16"	3 13/16"	3 5/16"	2 11/16"	1 15/16"	1"
	TOTAL CAMBER	5/8"	1 5/16"	2"	2 11/16"	3 3/8"	4"	4 1/2"	4 13/16"	4 15/16"	4 13/16"	4 1/2"	4"	3 5/16"	2 1/2"	1 5/8"	13/16"
3	STEEL DEFLECTION	-1/8"	-1/4"	-5/16"	-3/8"	-3/8"	-3/8"	-5/16"	-5/16"	-1/4"	-1/4"	-1/4"	-1/4"	-1/4"	-3/16"	-3/16"	-1/8"
	SLAB DEFLECTION	-1/4"	-3/8"	-7/16"	-3/8"	-1/4"	-1/16"	1/16"	3/16"	5/16"	5/16"	1/4"	3/16"	0"	-1/8"	-3/16"	-1/8"
	SDL DEFLECTION	-1/16"	-1/16"	-1/8"	-1/8"	-1/16"	-1/16"	-1/16"	0"	0"	0"	0"	0"	-1/16"	-1/16"	-1/16"	-1/16"
	TOTAL DEFLECTION	-7/16"	-3/4"	-7/8"	-7/8"	-11/16"	-1/2"	-5/16"	-1/8"	0"	1/16"	0"	-1/16"	-1/4"	-3/8"	-7/16"	-5/16"
	PROFILE CAMBER	1"	1 15/16"	2 11/16"	3 5/16"	3 13/16"	4 3/16"	4 7/16"	4 9/16"	4 9/16"	4 7/16"	4 3/16"	3 13/16"	3 5/16"	2 11/16"	1 15/16"	1"
	TOTAL CAMBER	9/16"	1 3/16"	1 13/16"	2 7/16"	3 1/8"	3 11/16"	4 3/16"	4 1/2"	4 5/8"	4 1/2"	4 3/16"	3 3/4"	3 1/16"	2 5/16"	1 1/2"	3/4"
4	STEEL DEFLECTION	-3/16"	-5/16"	-7/16"	-1/2"	-1/2"	-1/2"	-1/2"	-1/2"	-7/16"	-7/16"	-3/8"	-3/8"	-3/8"	-5/16"	-1/4"	-1/8"
	SLAB DEFLECTION	-1/4"	-7/16"	-1/2"	-7/16"	-3/8"	-1/4"	-1/16"	1/16"	1/8"	3/16"	1/8"	1/16"	-1/16"	-3/16"	-1/4"	-3/16"
	SDL DEFLECTION	-1/16"	-1/8"	-1/8"	-1/8"	-1/8"	-1/16"	-1/16"	-1/16"	-1/16"	0"	-1/16"	-1/16"	-1/16"	-1/16"	-1/16"	-1/16"
	TOTAL DEFLECTION	-1/2"	-7/8"	- 1 1/16"	- 1 1/16"	- 1"	-7/8"	-5/8"	-1/2"	-3/8"	-5/16"	-5/16"	-3/8"	-7/16"	-9/16"	-9/16"	-3/8"
	PROFILE CAMBER	1"	1 15/16"	2 11/16"	3 5/16"	3 13/16"	4 3/16"	4 7/16"	4 9/16"	4 9/16"	4 7/16"	4 3/16"	3 13/16"	3 5/16"	2 11/16"	1 15/16"	1"
	TOTAL CAMBER	1/2"	1 1/16"	1 5/8"	2 1/4"	2 13/16"	3 3/8"	3 13/16"	4 1/8"	4 1/4"	4 3/16"	3 15/16"	3 7/16"	2 7/8"	2 1/8"	1 3/8"	5/8"
5	STEEL DEFLECTION	-1/4"	-7/16"	-9/16"	-5/8"	-11/16"	-11/16"	-11/16"	-11/16"	-5/8"	-5/8"	-9/16"	-1/2"	-7/16"	-3/8"	-5/16"	-3/16"
	SLAB DEFLECTION	-5/16"	-1/2"	-9/16"	-9/16"	-1/2"	-3/8"	-1/4"	-1/8"	0"	0"	0"	-1/16"	-3/16"	-1/4"	-5/16"	-1/4"
	SDL DEFLECTION	-1/16"	-1/8"	-1/8"	-1/8"	-1/8"	-1/8"	-1/16"	-1/16"	-1/16"	-1/16"	-1/16"	-1/16"	-1/16"	-1/16"	-1/16"	-1/16"
	TOTAL DEFLECTION	-5/8"	- 1 1/16"	- 1 5/16"	- 1 3/8"	- 1 5/16"	- 1 3/16"	- 1"	-7/8"	-11/16"	-5/8"	-5/8"	-5/8"	-11/16"	-3/4"	-11/16"	-7/16"
	PROFILE CAMBER	1"	1 15/16"	2 11/16"	3 5/16"	3 13/16"	4 3/16"	4 7/16"	4 9/16"	4 9/16"	4 7/16"	4 3/16"	3 13/16"	3 5/16"	2 11/16"	1 15/16"	1"
	TOTAL CAMBER	3/8"	7/8"	1 3/8"	1 15/16"	2 1/2"	3"	3 7/16"	3 3/4"	3 7/8"	3 13/16"	3 5/8"	3 3/16"	2 5/8"	1 15/16"	1 1/4"	9/16"

SPAN #3

GIRDER	LOAD TYPE	1	2	3	4	5	6	7	8	9	10	11	12	13	14	15
1	STEEL DEFLECTION	1/16"	3/16"	5/16"	1/2"	5/8"	3/4"	7/8"	15/16"	15/16"	15/16"	7/8"	3/4"	5/8"	7/16"	3/16"
	SLAB DEFLECTION	1/4"	9/16"	15/16"	1 3/8"	1 13/16"	2 1/4"	2 9/16"	2 3/4"	2 7/8"	2 13/16"	2 5/8"	2 1/4"	1 13/16"	1 1/4"	11/16"
	SDL DEFLECTION	1/16"	1/8"	3/16"	5/16"	3/8"	7/16"	1/2"	9/16"	9/16"	9/16"	1/2"	7/16"	3/8"	1/4"	1/8"
	TOTAL DEFLECTION	3/8"	7/8"	1 1/2"	2 3/16"	2 13/16"	3 7/16"	3 15/16"	4 1/4"	4 3/8"	4 1/4"	4"	3 1/2"	2 3/4"	1 15/16"	1"
	PROFILE CAMBER	9/16"	15/16"	1 1/4"	1 7/16"	1 9/16"	1 1/2"	1 3/4"	2"	2 3/16"	2 3/16"	2 1/8"	1 15/16"	1 5/8"	1 3/16"	11/16"
	TOTAL CAMBER	7/8"	1 13/16"	2 3/4"	3 5/8"	4 3/8"	4 15/16"	5 11/16"	6 1/4"	6 1/2"	6 1/2"	6 1/8"	5 7/16"	4 3/8"	3 1/8"	1 11/16"
2	STEEL DEFLECTION	1/8"	1/4"	7/16"	9/16"	3/4"	7/8"	1"	1 1/16"	1 1/8"	1 1/16"	1"	7/8"	11/16"	1/2"	1/4"
	SLAB DEFLECTION	1/4"	5/8"	1 1/16"	1 9/16"	2"	2 7/16"	2 3/4"	3"	3 1/16"	3"	2 13/16"	2 7/16"	2"	1 3/8"	11/16"
	SDL DEFLECTION	1/16"	1/8"	3/16"	5/16"	3/8"	1/2"	9/16"	9/16"	9/16"	9/16"	1/2"	7/16"	3/8"	1/4"	1/8"
	TOTAL DEFLECTION	7/16"	1"	1 11/16"	2 7/16"	3 1/8"	3 13/16"	4 5/16"	4 5/8"	4 3/4"	4 5/8"	4 5/16"	3 13/16"	3 1/16"	2 1/8"	1 1/8"
	PROFILE CAMBER	11/16"	1 5/16"	1 3/4"	2 1/8"	2 3/8"	2 1/2"	2 11/16"	2 7/8"	2 15/16"	2 7/8"	2 11/16"	2 3/8"	1 15/16"	1 7/16"	3/4"
	TOTAL CAMBER	1 1/8"	2 5/16"	3 7/16"	4 9/16"	5 1/2"	6 5/16"	7"	7 1/2"	7 11/16"	7 1/2"	7"	6 1/8"	5"	3 9/16"	1 7/8"
3	STEEL DEFLECTION	1/8"	5/16"	1/2"	11/16"	7/8"	1 1/16"	1 1/8"	1 1/4"	1 1/4"	1 3/16"	1 1/8"	1"	13/16"	9/16"	5/16"
	SLAB DEFLECTION	5/16"	11/16"	1 1/8"	1 11/16"	2 1/8"	2 9/16"	2 15/16"	3 3/16"	3 1/4"	3 3/16"	2 15/16"	2 5/8"	2 1/16"	1 7/16"	3/4"
	SDL DEFLECTION	1/16"	1/8"	1/4"	5/16"	7/16"	1/2"	9/16"	5/8"	5/8"	5/8"	9/16"	1/2"	3/8"	1/4"	1/8"
	TOTAL DEFLECTION	1/2"	1 1/8"	1 7/8"	2 11/16"	3 7/16"	4 1/8"	4 5/8"	5"	5 1/8"	5"	4 5/8"	4 1/16"	3 1/4"	2 5/16"	1 3/16"
	PROFILE CAMBER	7/8"	1 5/8"	2 1/4"	2 13/16"	3 3/16"	3 1/2"	3 11/16"	3 3/4"	3 11/16"	3 1/2"	3 3/16"	2 13/16"	2 1/4"	1 5/8"	7/8"
	TOTAL CAMBER	1 3/8"	2 3/4"	4 1/8"	5 1/2"	6 5/8"	7 5/8"	8 5/16"	8 3/4"	8 3/4"	8 1/2"	7 7/8"	6 7/8"	5 9/16"	3 15/16"	2 1/16"
4	STEEL DEFLECTION	3/16"	3/8"	5/8"	13/16"	1"	1 3/16"	1 5/16"	1 3/8"	1 3/8"	1 3/8"	1 1/4"	1 1/16"	7/8"	5/8"	5/16"
	SLAB DEFLECTION	5/16"	3/4"	1 1/4"	1 13/16"	2 5/16"	2 3/4"	3 1/16"	3 5/16"	3 3/8"	3 5/16"	3 1/8"	2 11/16"	2 3/16"	1 1/2"	13/16"
	SDL DEFLECTION	1/16"	3/16"	1/4"	3/8"	1/2"	9/16"	5/8"	11/16"	11/16"	11/16"	5/8"	9/16"	7/16"	5/16"	3/16"
	TOTAL DEFLECTION	9/16"	1 5/16"	2 1/8"	3"	3 13/16"	4 1/2"	5 1/16"	5 3/8"	5 1/2"	5 3/8"	5"	4 3/8"	3 1/2"	2 7/16"	1 1/4"
	PROFILE CAMBER	1 1/16"	1 15/16"	2 3/4"	3 7/16"	4"	4 1/2"	4 5/8"	4 9/16"	4 7/16"	4 1/8"	3 3/4"	3 1/4"	2 9/16"	1 13/16"	1"
	TOTAL CAMBER	1 5/8"	3 1/4"	4 7/8"	6 7/16"	7 13/16"	9"	9 11/16"	10"	9 15/16"	9 1/2"	8 11/16"	7 9/16"	6 1/16"	4 5/16"	2 1/4"
5	STEEL DEFLECTION	3/16"	7/16"	11/16"	15/16"	1 3/16"	1 5/16"	1 1/2"	1 9/16"	1 9/16"	1 1/2"	1 3/8"	1 3/16"	1"	11/16"	3/8"
	SLAB DEFLECTION	3/8"	13/16"	1 5/16"	1 15/16"	2 7/16"	2 15/16"	3 1/4"	3 1/2"	3 9/16"	3 1/2"	3 1/4"	2 13/16"	2 1/4"	1 9/16"	13/16"
	SDL DEFLECTION	1/16"	3/16"	5/16"	7/16"	9/16"	11/16"	3/4"	13/16"	13/16"	13/16"	3/4"	5/8"	1/2"	3/8"	3/16"
	TOTAL DEFLECTION	5/8"	1 7/16"	2 3/8"	3 5/16"	4 3/16"	4 15/16"	5 1/2"	5 7/8"	5 15/16"	5 13/16"	5 3/8"	4 11/16"	3 3/4"	2 5/8"	1 3/8"
	PROFILE CAMBER	1 3/16"	2 5/16"	3 1/4"	4 1/8"	4 7/8"	5 1/2"	5 9/16"	5 7/16"	5 3/16"	4 3/4"	4 1/4"	3 5/8"	2 15/16"	2 1/16"	1 1/16"
	TOTAL CAMBER	1 7/8"	3 3/4"	5 5/8"	7 7/16"	9"	10 7/16"	11 1/16"	11 5/16"	11 1/8"	10 9/16"	9 5/8"	8 5/16"	6 11/16"	4 11/16"	2 7/16"

PROJECT NAME: MIDDLESEX
PROJECT NUMBER: IM 089-2(41)

FILE NAME: z07a052bdrsup8.dgn
PLOT DATE: 1/3/2015
PROJECT LEADER: R. HEBERT
DRAWN BY: S. MORGAN
DESIGNED BY: G. SRIPATHY
CHECKED BY: J. OLUND
CAMBER DIAGRAM & DEAD LOAD DEFLECTIONS

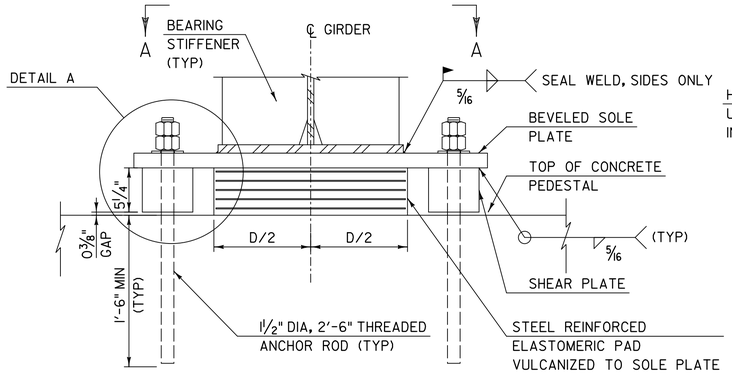

EXPANSION BEARING ELEVATION

NOT TO SCALE

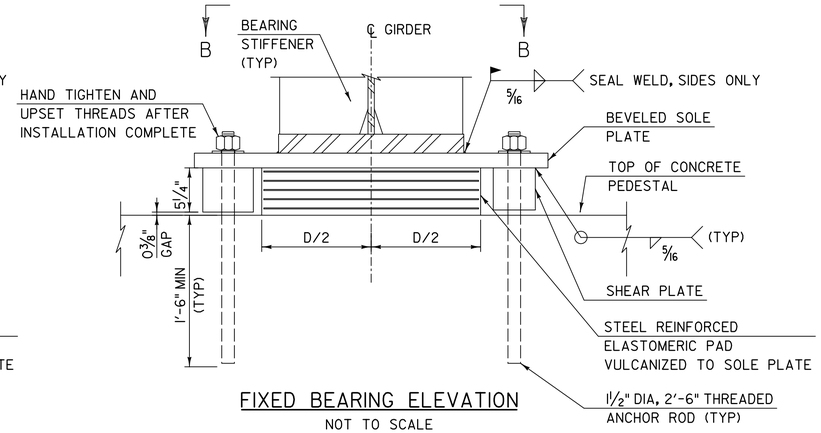

FIXED BEARING ELEVATION

NOT TO SCALE

NOTES:

1. BEARINGS SHALL CONFORM TO THE APPLICABLE SUBSECTIONS OF STANDARD SPECIFICATIONS SECTIONS 531 AND 731.
2. STEEL REINFORCING PLATES BETWEEN LAYERS OF ELASTOMER SHALL MEET THE REQUIREMENTS OF AASHTO M270M/M270, GRADE 36. ALL INTERNAL STEEL PLATES SHALL BE SAND BLASTED AND FREE OF COATINGS, RUST, AND MILL SCALE. THE PLATES SHALL BE FREE OF SHARP EDGES AND BURRS.
3. ALL BEARING ASSEMBLY PLATES SHALL BE AASHTO M 270, GRADE 36.
4. THE ELASTOMER SHALL BE DUROMETER 60, WITH A SHEAR MODULUS BETWEEN 130 PSI AND 200 PSI.
5. ALL BEARINGS SHALL BE MARKED PRIOR TO SHIPPING. THE MARKS SHALL INCLUDE THE BEARING LOCATION ON THE BRIDGE AND A DIRECTION ARROW THAT POINTS UPSTATION. ALL MARKS SHALL BE PERMANENT AND SHALL BE VISIBLE AFTER THE BEARING IS INSTALLED.
6. BEARINGS SHALL BE COVERED DURING TRANSIT.
7. THREADED ANCHOR RODS SHALL MEET THE REQUIREMENTS OF ASTM F1554, GRADE 55, AND SHALL BE THREADED 6" AND SWEDGED ON THE EMBEDDED PORTION OF THE ROD.
8. THE CONCRETE UNDER THE BEARING DEVICE SHALL BE LEVEL.
9. GIRDER SHALL BE ERECTED AT A TEMPERTURE BETWEEN 20 DEG F AND 70 DEG F.
10. SOLE PLATES SHALL BE CENTERED UNDER GIRDER FLANGE AND BEARING STIFFENERS PRIOR TO FIELD WELDING.

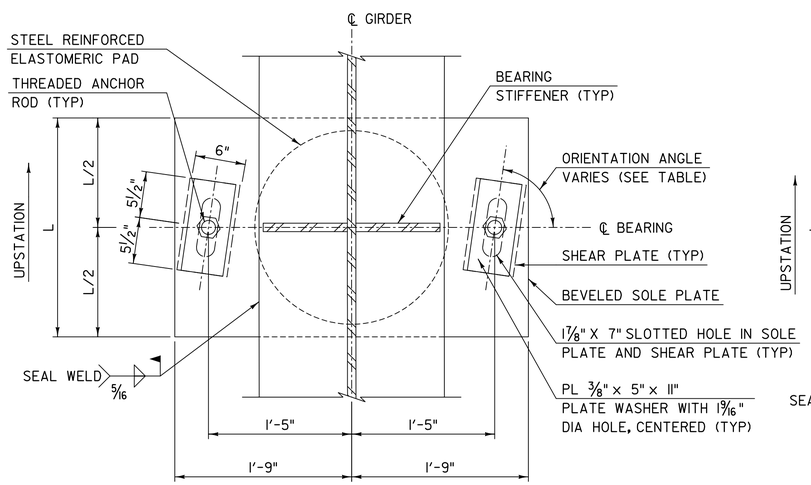

VIEW A-A: EXPANSION BEARING PLAN

NOT TO SCALE

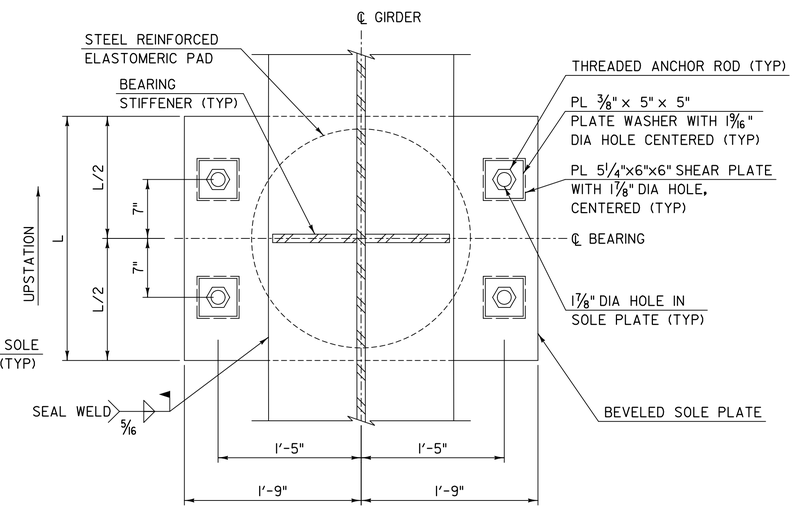

VIEW B-B: FIXED BEARING PLAN

NOT TO SCALE

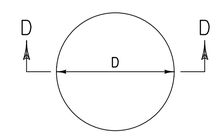

ELASTOMERIC BEARING PAD PLAN

NOT TO SCALE

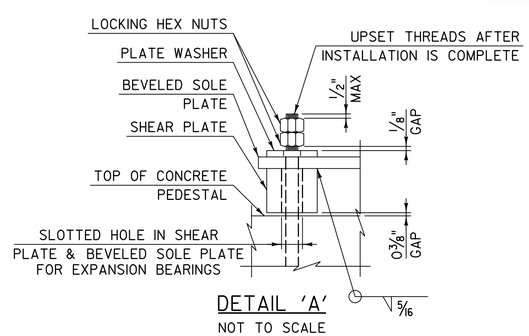

DETAIL 'A'

NOT TO SCALE

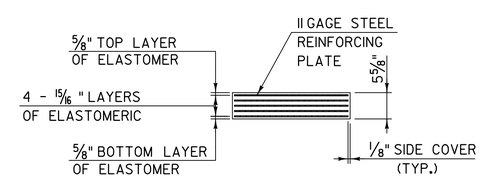

SECTION D-D

NOT TO SCALE

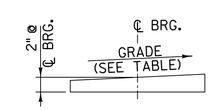

BEVELED SOLE PLATE ELEVATION

NOT TO SCALE

BEARING TABLE					
LOCATION	BEARING TYPE	D (IN)	L (IN)	GRADE* (%)	ORIENT. ANGLE (°)
ABUTMENT #1	EXP	23	26	3.73%	95.4
PIER #1	FIXED	26	29	1.70%	N/A
PIER #2	EXP	26	29	-0.13%	85.2
ABUTMENT #2	EXP	23	26	-1.77%	81.9

* POSITIVE GRADE INDICATES THICKER END OF BEVELED SOLE PLATE IS UPSTATION.

PROJECT NAME: MIDDLESEX
PROJECT NUMBER: IM 089-2(41)

FILE NAME: z07a052bdrsup9.dgn
PROJECT LEADER: R. HEBERT
DESIGNED BY: G SRIPATHY
BEARING DETAILS

PLOT DATE: 1/3/2015
DRAWN BY: S MORGAN
CHECKED BY: J OLUND
SHEET 78 OF 154

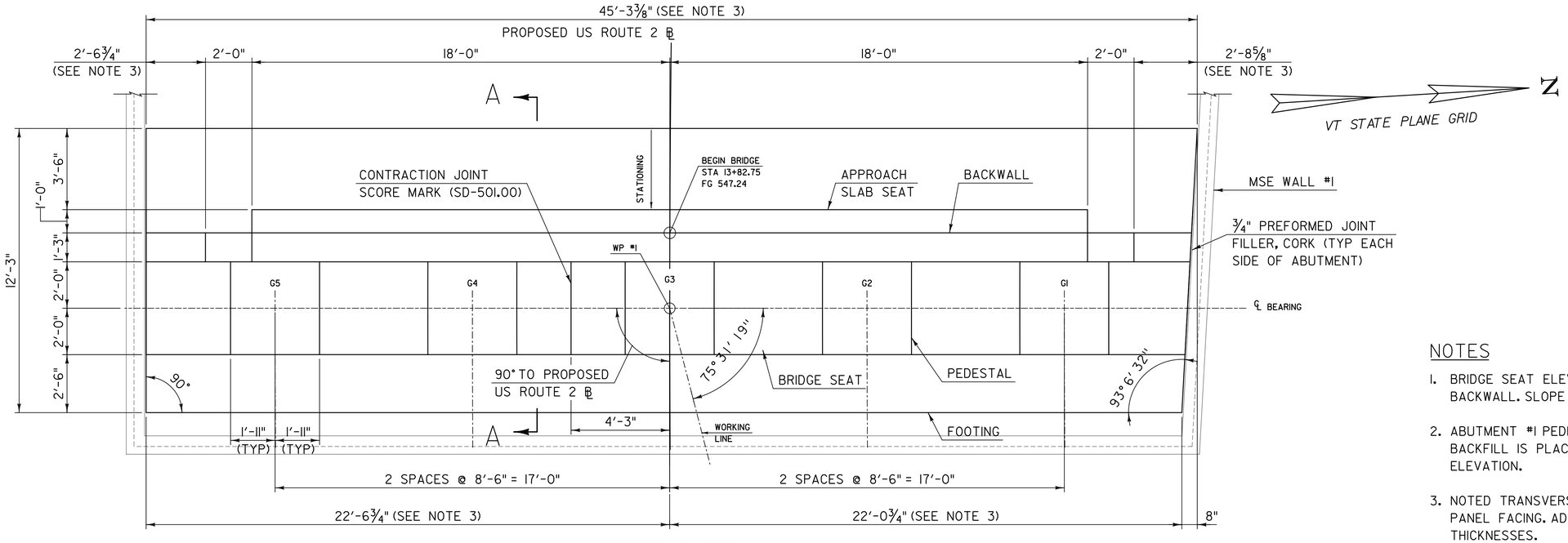

ABUTMENT #1 - PLAN

SCALE: 3/8" = 1'-0"

NOTES

1. BRIDGE SEAT ELEVATIONS ARE PROVIDED AT THE NEAR FACE OF BACKWALL. SLOPE BRIDGE SEAT TOWARD MIDSPAN 1".
2. ABUTMENT #1 PEDESTALS SHALL NOT BE CAST UNTIL ABUTMENT BACKFILL IS PLACED UP TO THE BOTTOM OF APPROACH SLAB #1 ELEVATION.
3. NOTED TRANSVERSE DIMENSIONS ASSUME A 5 1/2" THICK MSE WALL PANEL FACING. ADJUST DIMENSIONS FOR OTHER PANEL FACING THICKNESSES.

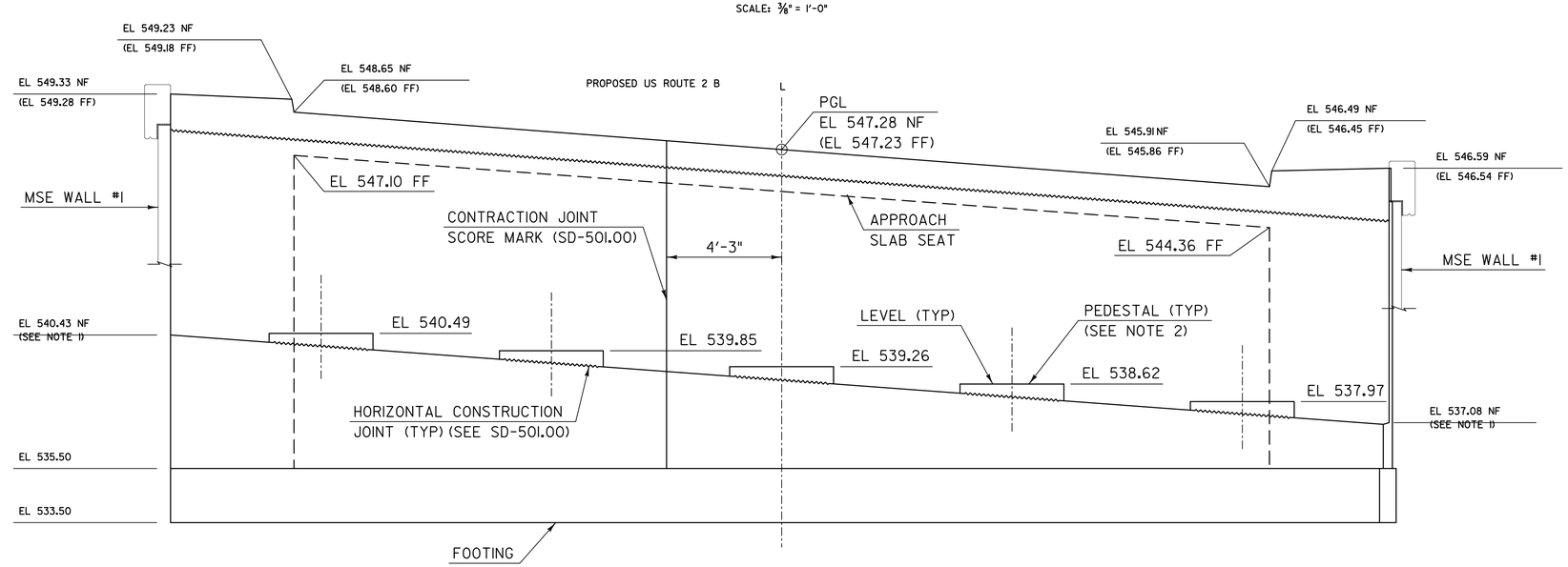

ABUTMENT #1 - ELEVATION

SCALE: 3/8" = 1'-0"

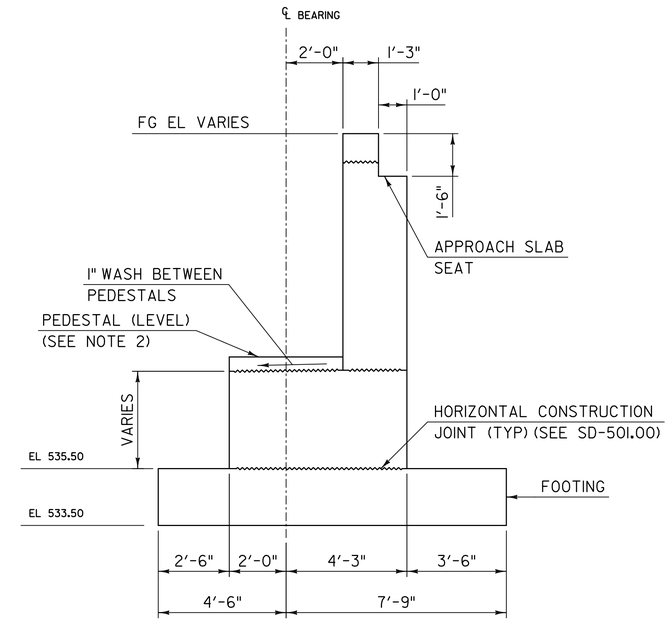

SECTION A-A

SCALE: 3/8" = 1'-0"

PROJECT NAME:	MIDDLESEX
PROJECT NUMBER:	IM 089-2(41)

FILE NAME: z07a052bdrabut1.dgn	PLOT DATE: 1/3/2015
PROJECT LEADER: R. HEBERT	DRAWN BY: S. MORGAN
DESIGNED BY: J. OLUND	CHECKED BY: T. POULIN
ABUTMENT #1 PLAN, ELEVATION & SECTION	SHEET 79 OF 154

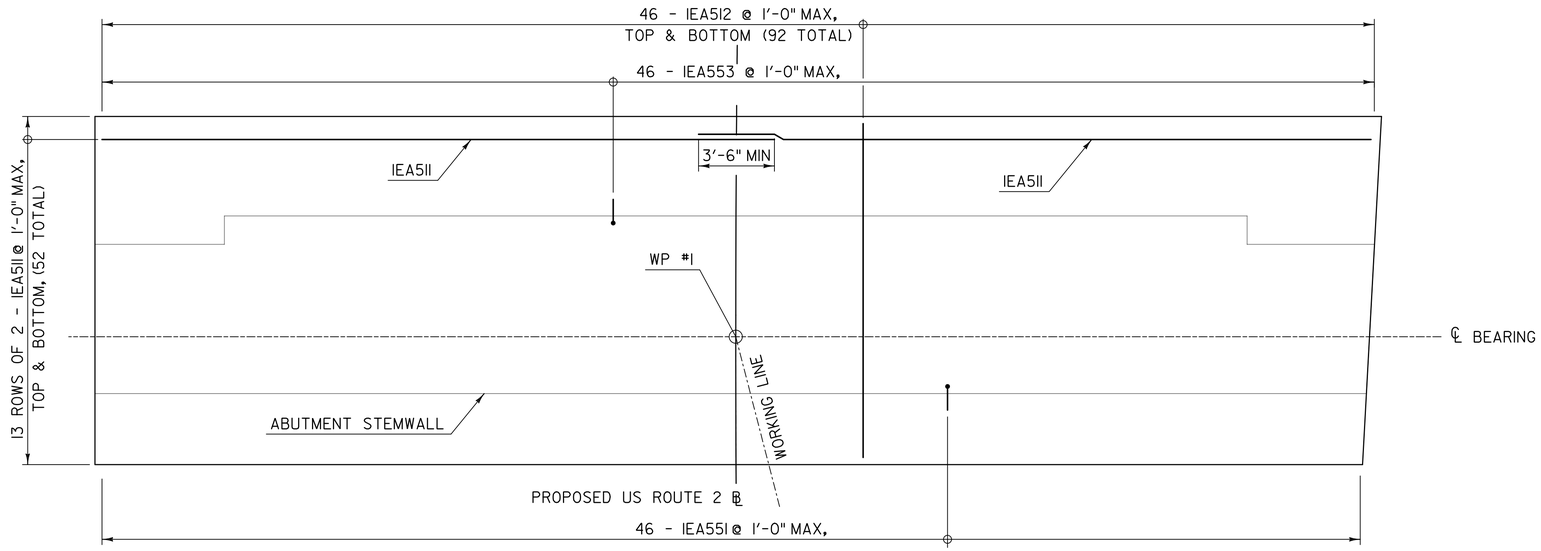

ABUTMENT #1 FOOTING REINFORCEMENT - PLAN

SCALE: 3/8" = 1'-0"

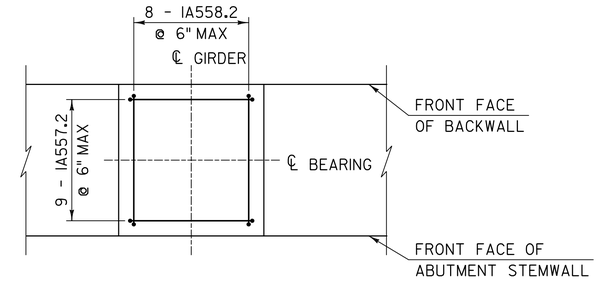

ABUTMENT PEDESTAL REINFORCEMENT PLAN

SCALE: 1/2" = 1'-0"

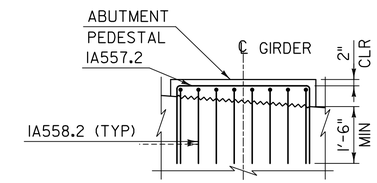

ABUTMENT PEDESTAL REINFORCEMENT ELEVATION

SCALE: 1/2" = 1'-0"

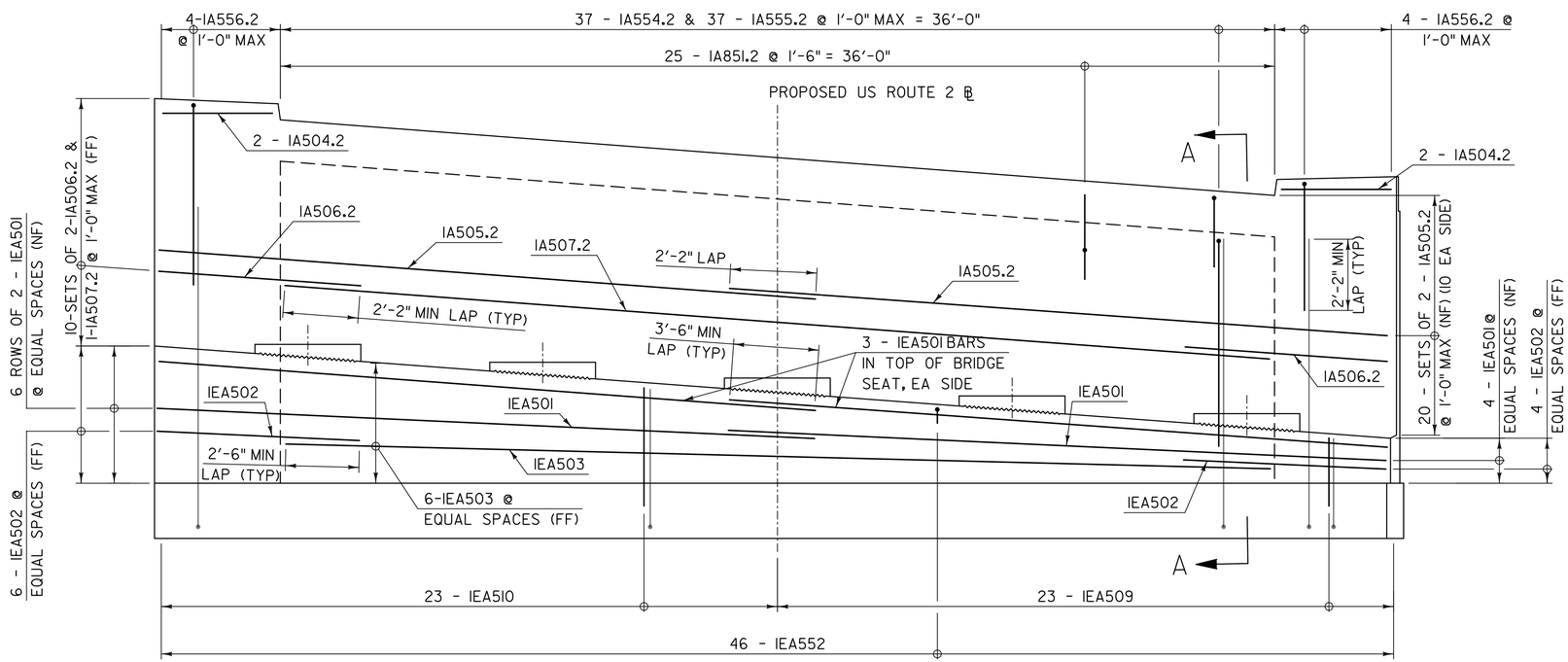

ABUTMENT #1 REINFORCEMENT - ELEVATION

SCALE: 3/8" = 1'-0"

(FOOTING BARS NOT SHOWN FOR CLARITY)

NOTE: ADJUST SPACING OF REINFORCING BARS TO AVOID BEARING ANCHORD RODS.

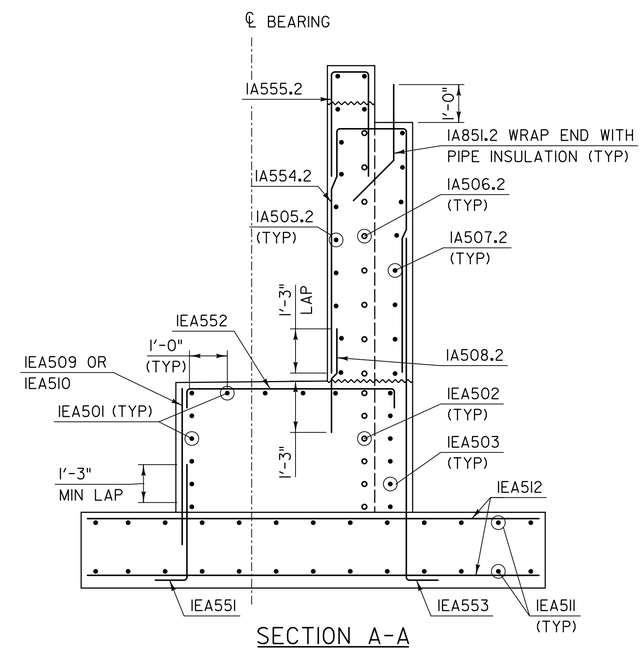

SECTION A-A

SCALE: 1/2" = 1'-0"

PROJECT NAME:	MIDDLESEX
PROJECT NUMBER:	IM 089-2(41)

FILE NAME: z07a052bdrabut1.dgn	PLOT DATE: 1/3/2015
PROJECT LEADER: R. HEBERT	DRAWN BY: S. MORGAN
DESIGNED BY: J. OLUND	CHECKED BY: T. POULIN
ABUTMENT #1 REINFORCEMENT	SHEET 80 OF 154

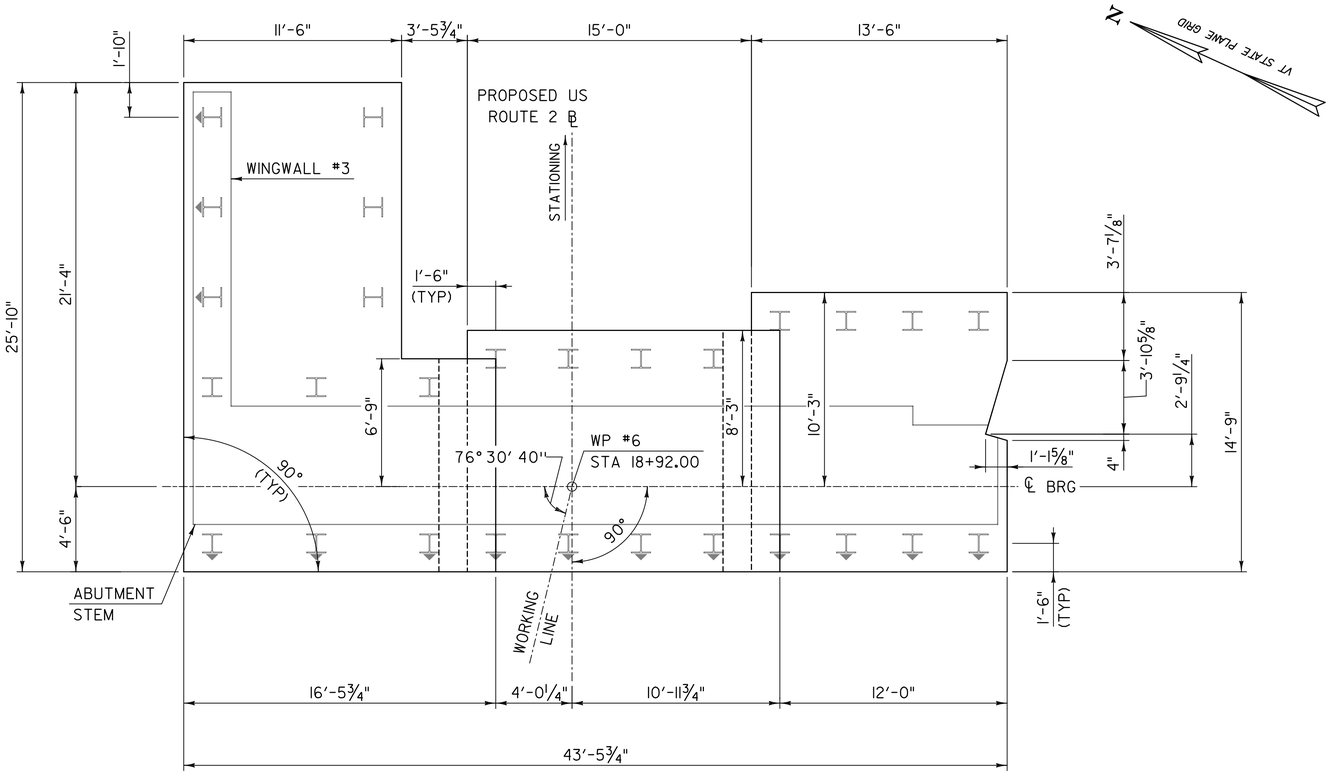

ABUTMENT #2 PILE CAP PLAN

SCALE: ¼" = 1'-0"

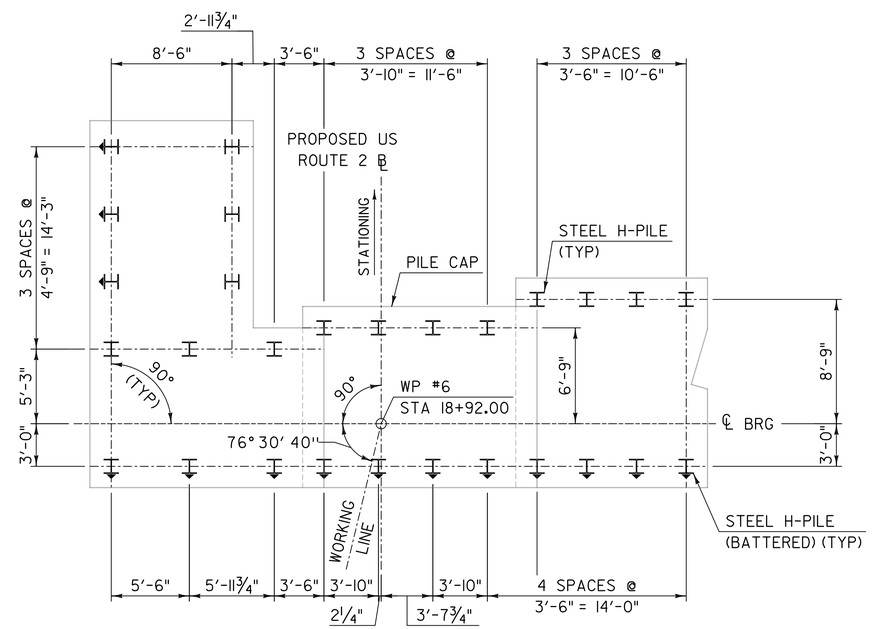

ABUTMENT #2 PILE LAYOUT

SCALE: 3/16" = 1'-0"

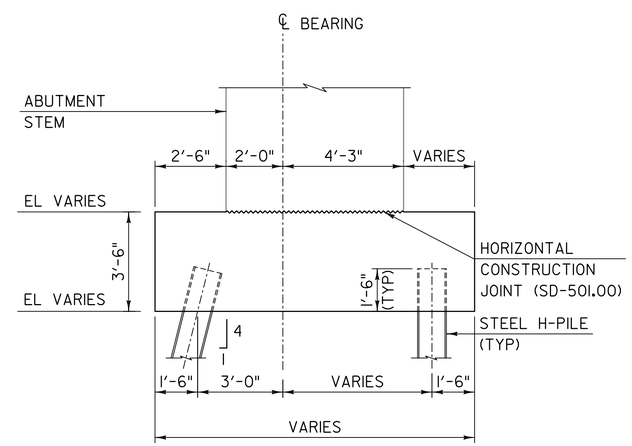

TYPICAL ABUTMENT PILE CAP SECTION

SCALE: ⅜" = 1'-0"

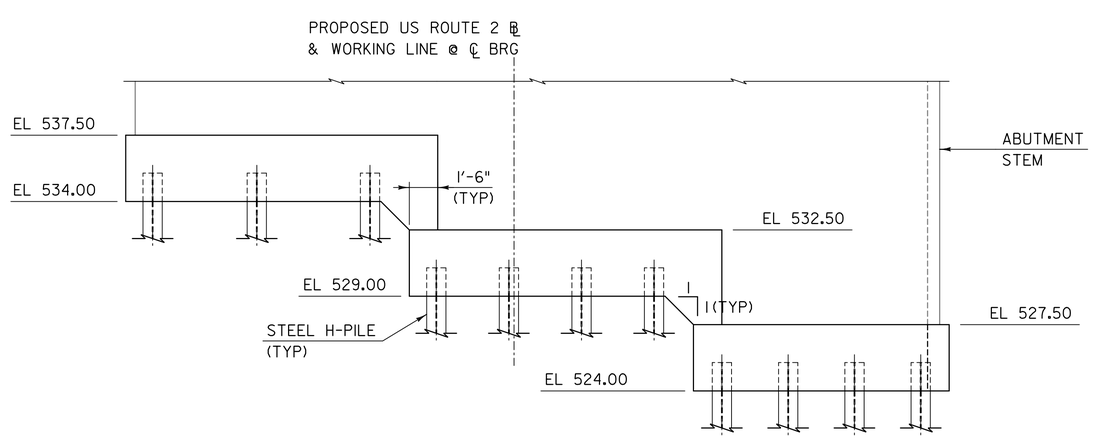

ABUTMENT #2 PILE CAP ELEVATION

SCALE: ¼" = 1'-0"

PROJECT NAME:	MIDDLESEX
PROJECT NUMBER:	IM 089-2(41)

FILE NAME: z07a052bdrabut2.dgn	PLOT DATE: 1/3/2015
PROJECT LEADER: R. HEBERT	DRAWN BY: S. MORGAN
DESIGNED BY: J. OLUND	CHECKED BY: T. POULIN
ABUTMENT #2 PILE CAP PLAN	SHEET 81 OF 154

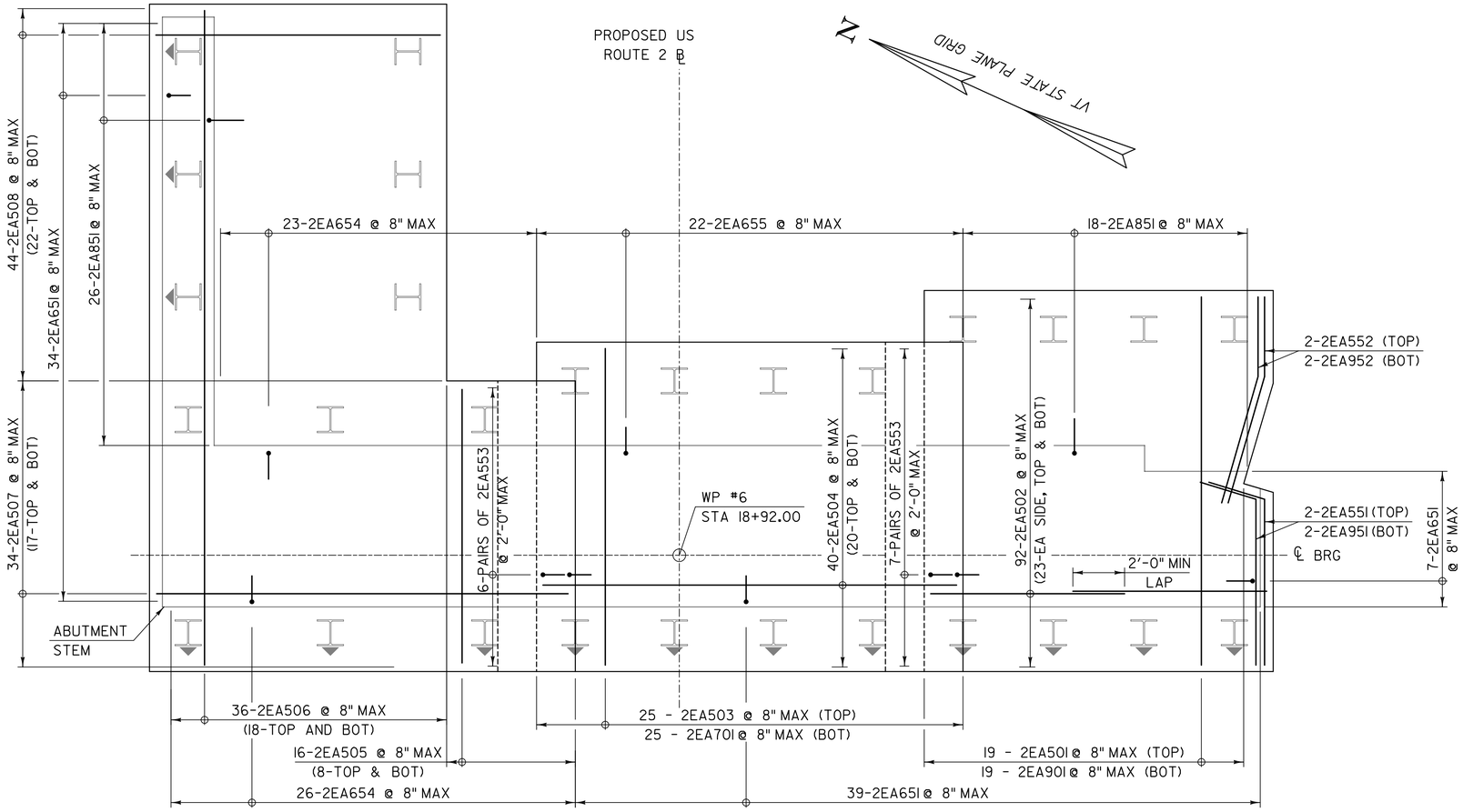

ABUTMENT #2 PILE CAP REINFORCING STEEL

SCALE: 3/8" = 1'-0"

NOTE: ADJUST SPACING OF REINFORCING BARS TO AVOID PILES.

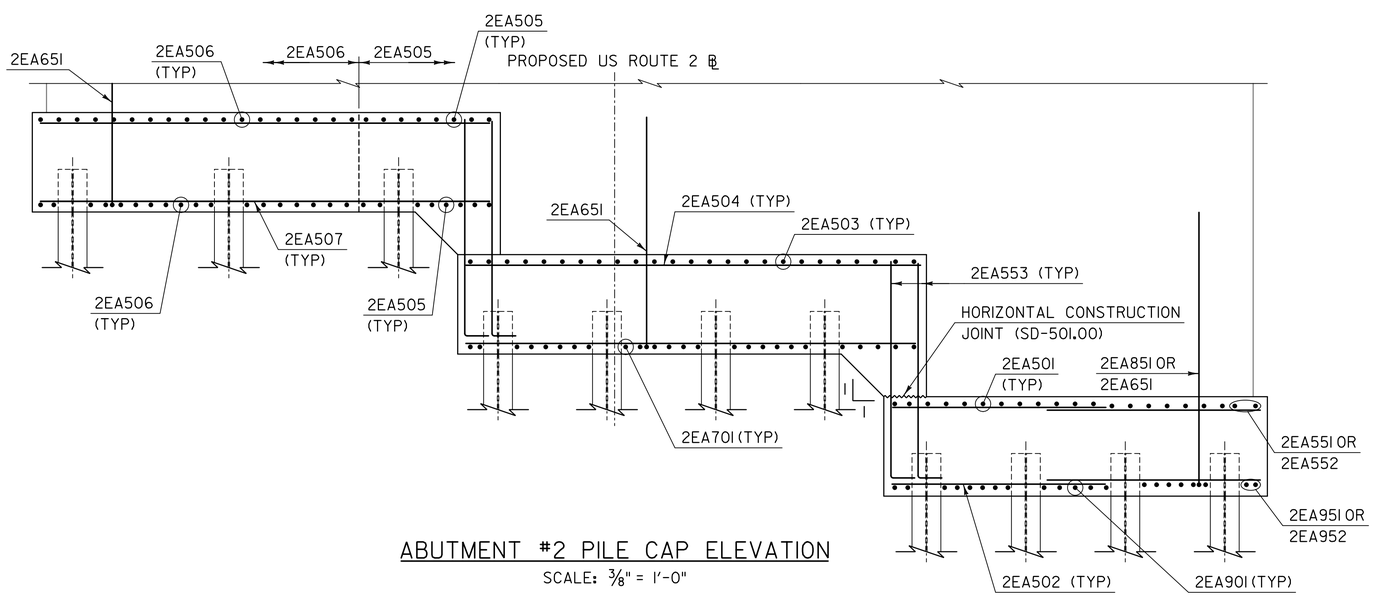

ABUTMENT #2 PILE CAP ELEVATION

SCALE: 3/8" = 1'-0"

PROJECT NAME: MIDDLESEX	
PROJECT NUMBER: IM 089-2(41)	
FILE NAME: z07a052bdrabut2.dgn	PLOT DATE: 1/3/2015
PROJECT LEADER: R. HEBERT	DRAWN BY: S. MORGAN
DESIGNED BY: J. OLUND	CHECKED BY: T. POULIN
ABUTMENT #2 PILE CAP REINFORCEMENT	SHEET 82 OF 154

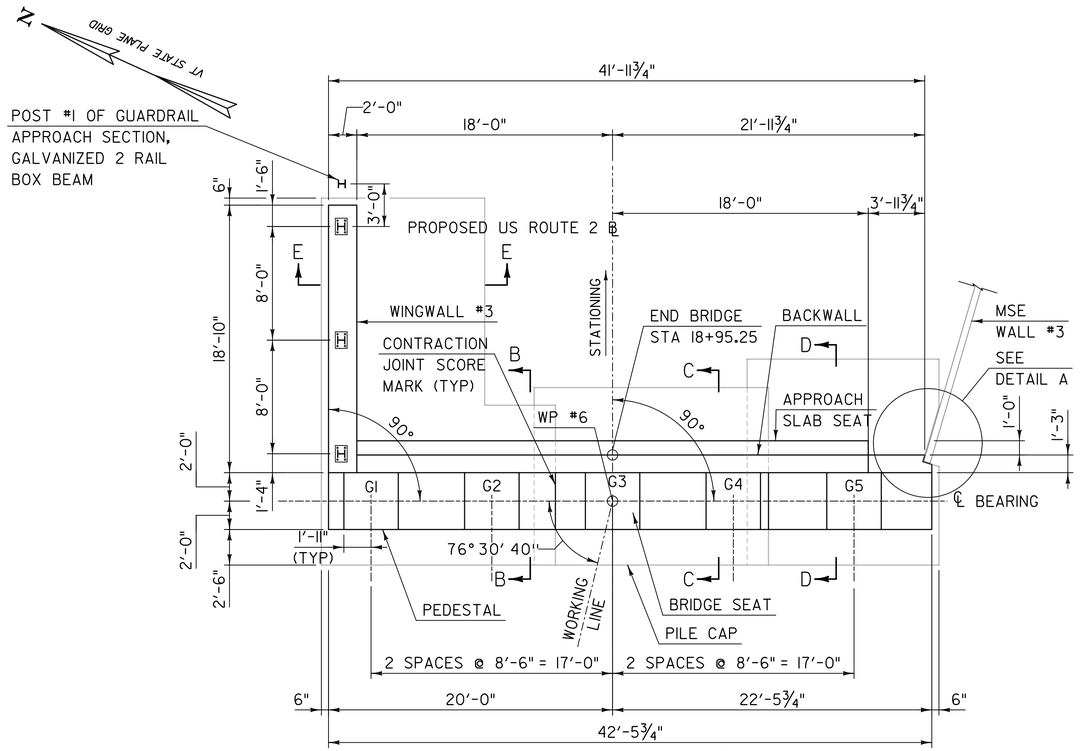

ABUTMENT #2 - PLAN

SCALE: 3/16" = 1'-0"
(PILES NOT SHOWN FOR CLARITY)

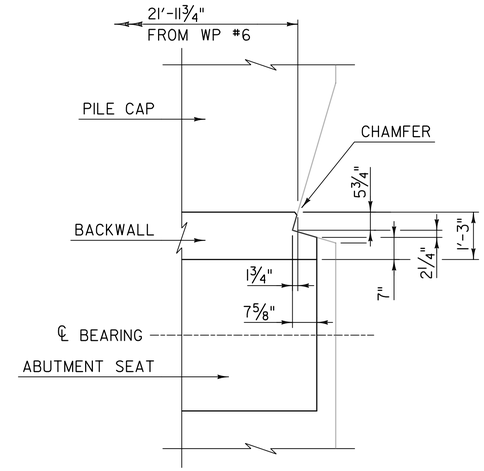

DETAIL A
MSE WALL #3 BLOCKOUT

SCALE: ½" = 1'-0"
(MSE WALL #3 NOT SHOWNS FOR CLARITY)

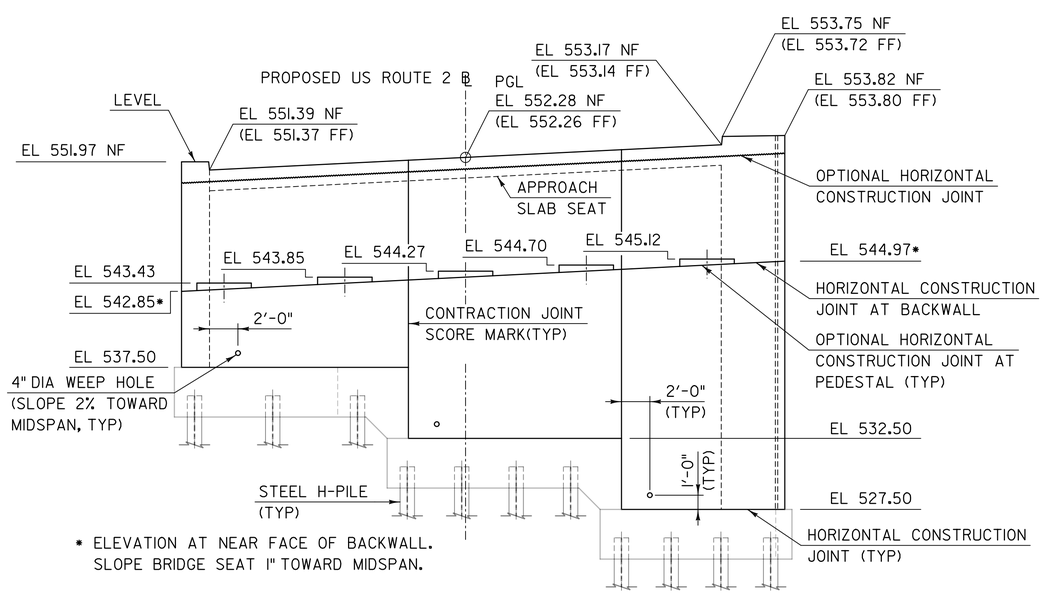

ABUTMENT #2 - ELEVATION

SCALE: 3/16" = 1'-0"

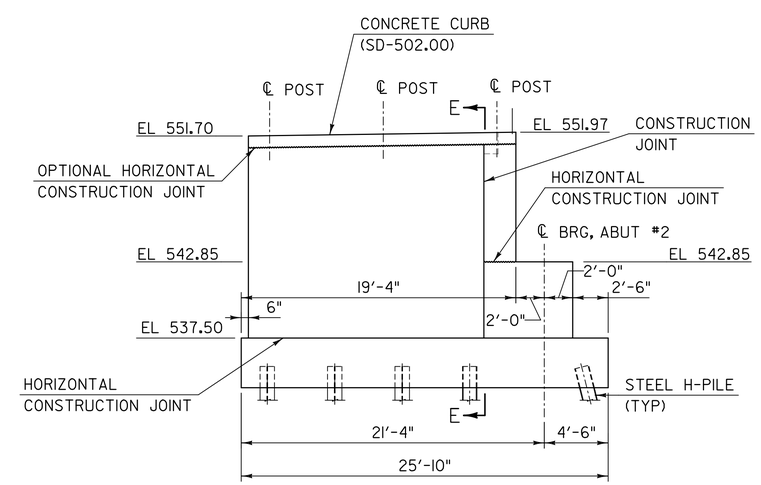

WINGWALL #3 - ELEVATION

SCALE: 3/16" = 1'-0"

NOTES:

1. SEE "ABUTMENT #2 SECTIONS" FOR SECTIONS B-B, C-C & D-D.
2. SEE "ABUTMENT #2 WINGWALL REINFORCEMENT" FOR SECTION E-E.
3. SEE SD-501.00 FOR CONSTRUCTION JOINT AND CONTRACTION JOINT SCORE MARK DETAILS.

PROJECT NAME: MIDDLESEX	
PROJECT NUMBER: IM 089-2(41)	
FILE NAME: z07a052bdrabut2.dgn	PLOT DATE: 1/3/2015
PROJECT LEADER: R. HEBERT	DRAWN BY: S. MORGAN
DESIGNED BY: J. OLUND	CHECKED BY: T. POULIN
ABUTMENT #2 PLAN & ELEVATION	SHEET 83 OF 154

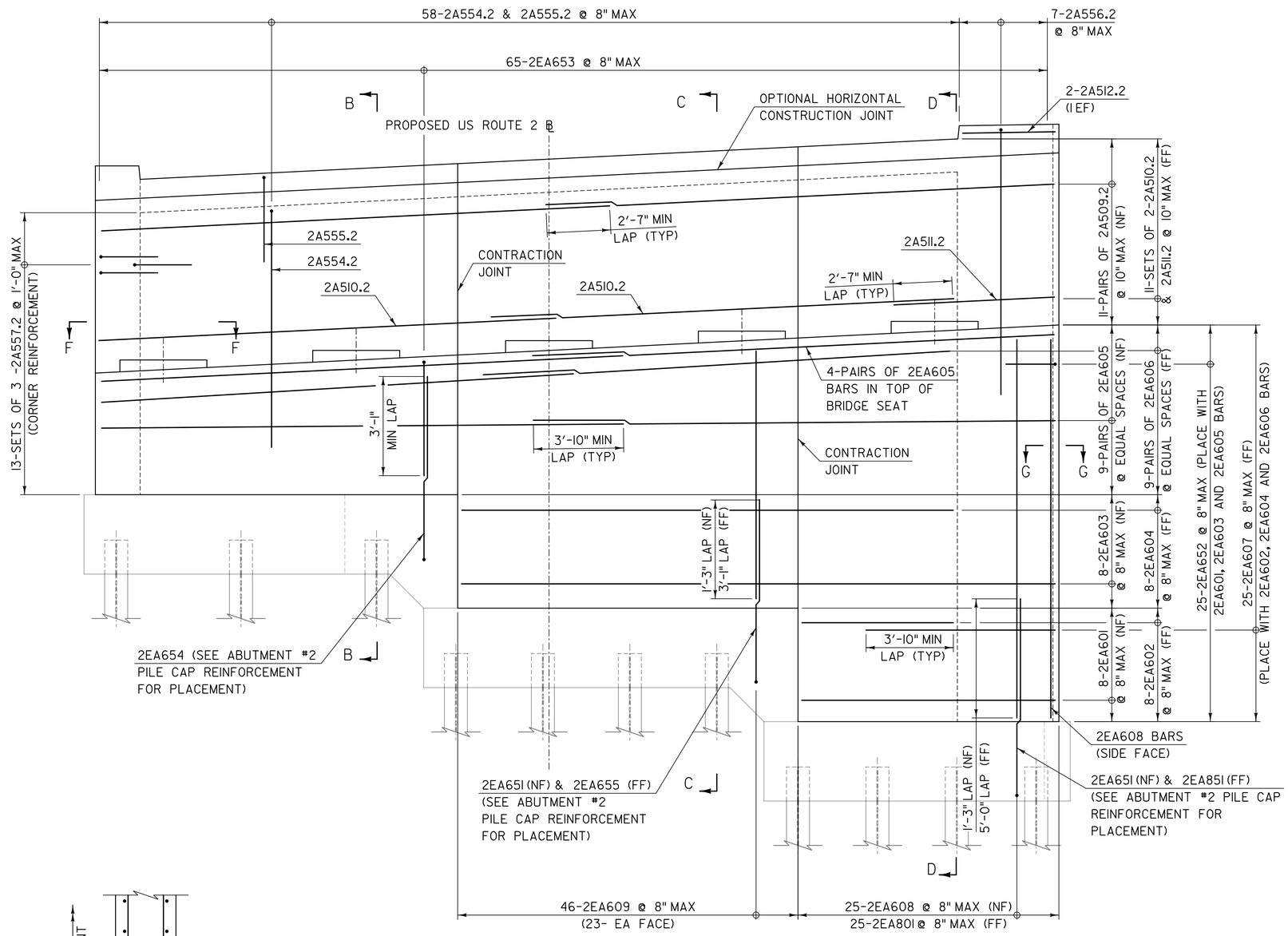

ABUTMENT #2 - ELEVATION

SCALE: 3/8" = 1'-0"
(PILE CAP AND WINGWALL REINFORCEMENT NOT SHOWN FOR CLARITY)

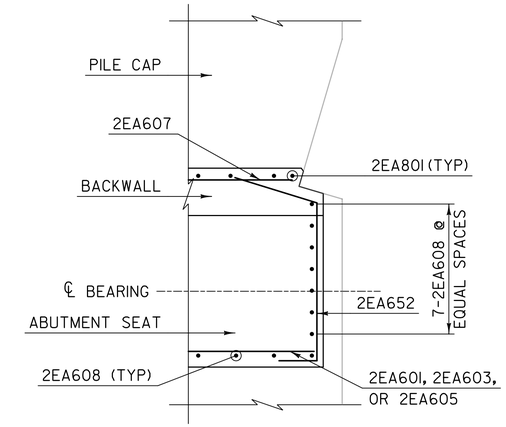

SECTION G-G

SCALE: 1/2" = 1'-0"

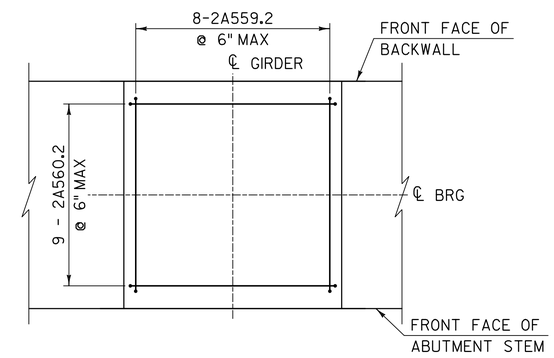

PEDESTAL REINFORCEMENT PLAN

SCALE 3/4" = 1'-0"

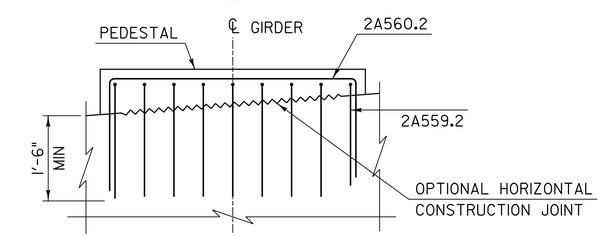

PEDESTAL REINFORCEMENT ELEVATION

SCALE 3/4" = 1'-0"

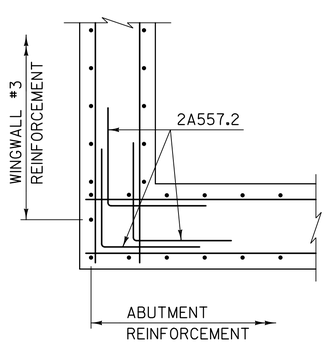

SECTION F-F

SCALE: 1/2" = 1'-0"

NOTES:

1. SEE "ABUTMENT #2 SECTIONS" FOR SECTIONS B-B, C-C & D-D.
2. ADJUST SPACING OF REINFORCING BARS TO AVOID BEARING ANCHOR RODS.
3. SEE SD-501.00 FOR CONSTRUCTION JOINT AND CONTRACTION JOINT SCORE MARK DETAILS.

PROJECT NAME: MIDDLESEX	
PROJECT NUMBER: IM 089-2(41)	
FILE NAME: z07a052bdrabut2.dgn	PLOT DATE: 1/3/2015
PROJECT LEADER: R. HEBERT	DRAWN BY: S. MORGAN
DESIGNED BY: J. OLUND	CHECKED BY: T. POULIN
ABUTMENT #2 REINFORCEMENT	SHEET 84 OF 154

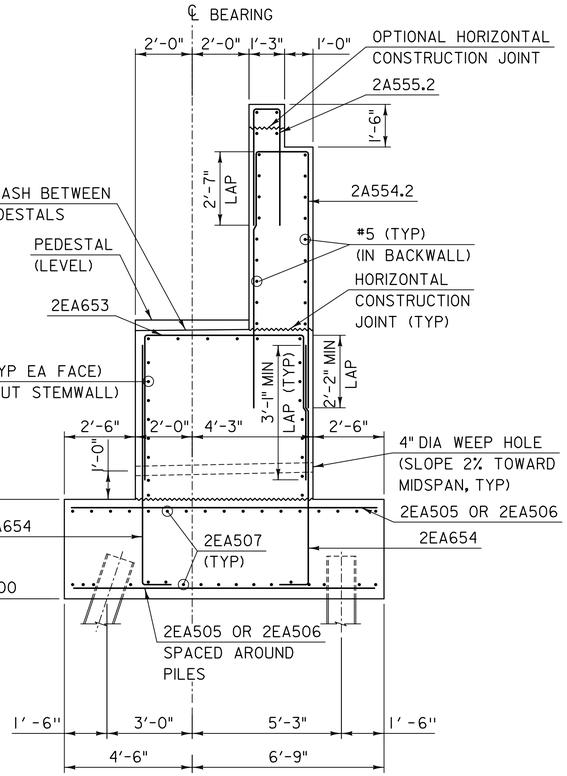

SECTION B-B

SCALE: 3/8" = 1'-0"

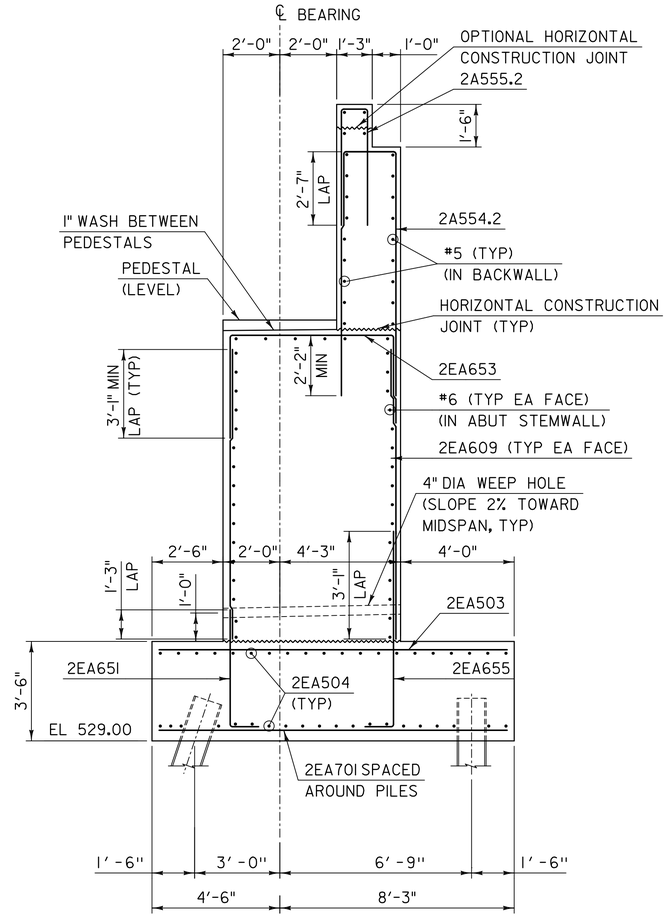

SECTION C-C

SCALE: 3/8" = 1'-0"

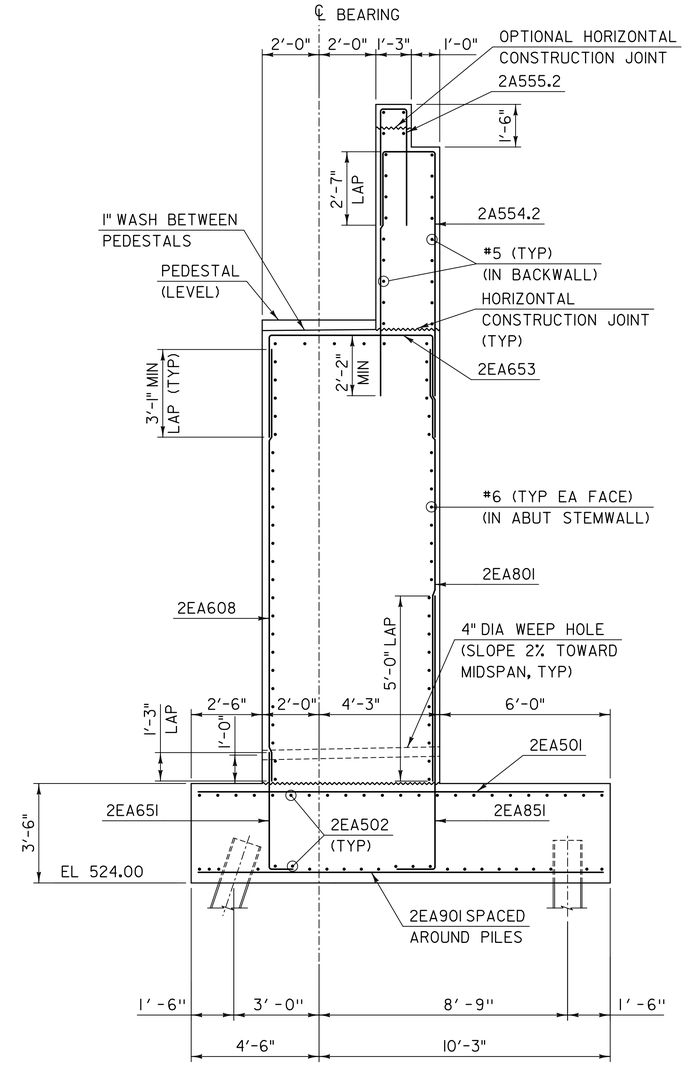

SECTION D-D

SCALE: 3/8" = 1'-0"

NOTES:

1. SEE SD-501.00 FOR CONSTRUCTION JOINT AND CONTRACTION JOINT SCORE MARK DETAILS.

PROJECT NAME: MIDDLESEX	
PROJECT NUMBER: IM 089-2(41)	
FILE NAME: z07a052bdrabut2.dgn	PLOT DATE: 1/3/2015
PROJECT LEADER: R. HEBERT	DRAWN BY: S. MORGAN
DESIGNED BY: J. OLUND	CHECKED BY: T. POULIN
ABUTMENT #2 SECTIONS	SHEET 85 OF 154

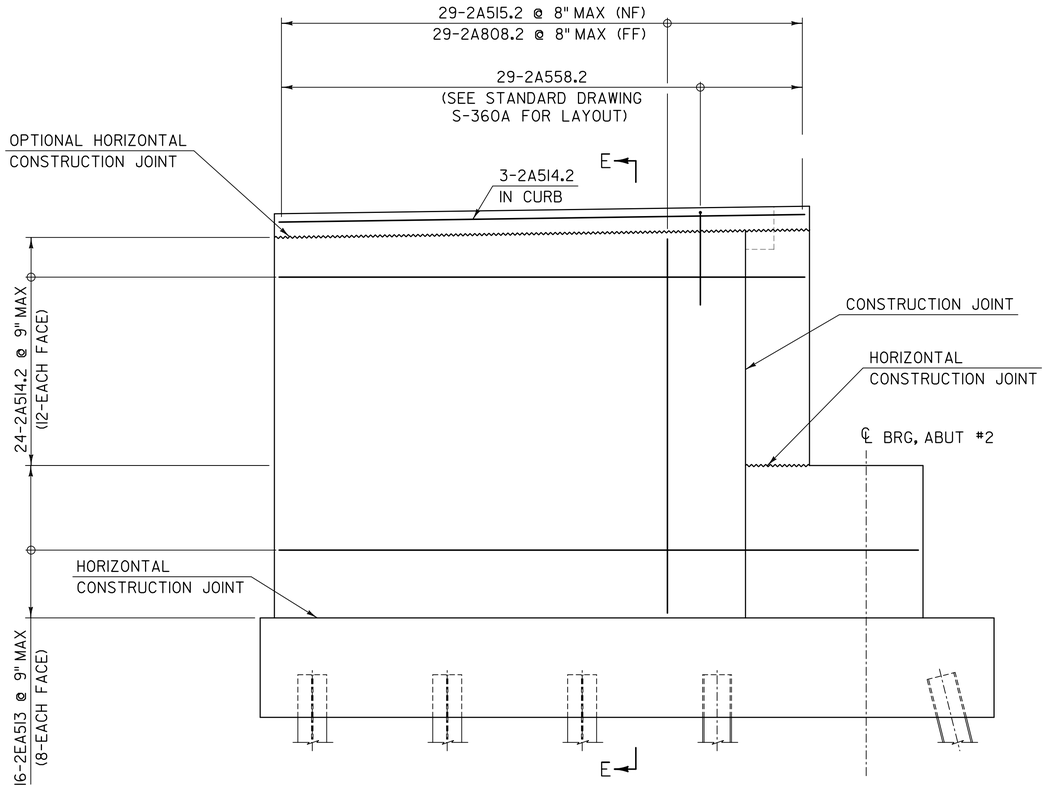

WINGWALL #3 REINFORCEMENT

SCALE: 3/8" = 1'-0"

(FOOTING REINFORCEMENT NOT SHOWN)

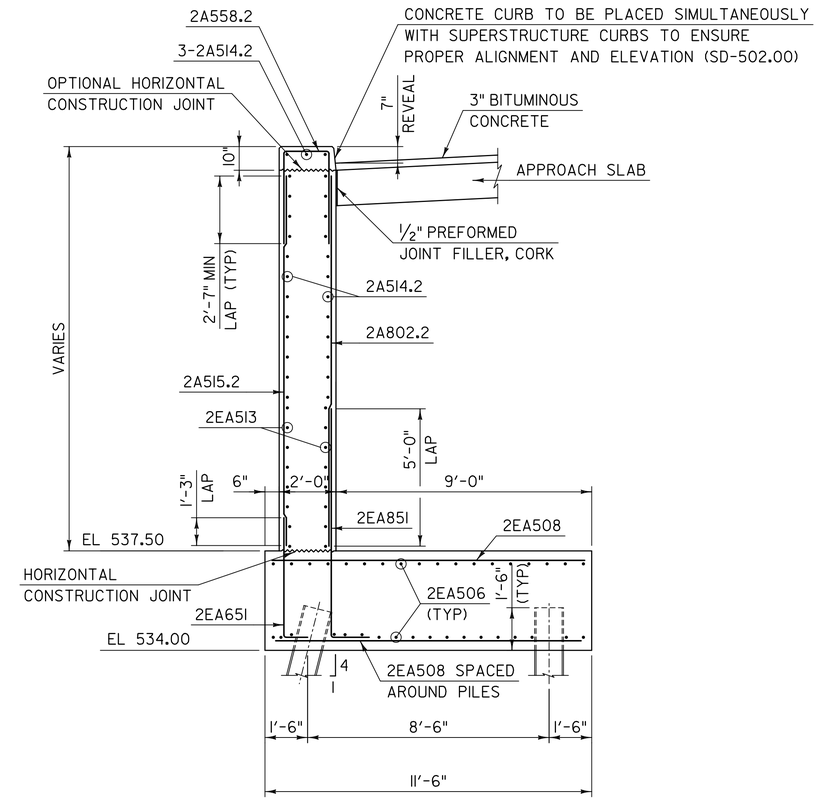

SECTION E-E

TYPICAL WINGWALL SECTION

SCALE: 3/8" = 1'-0"

NOTES:

1. SEE SD-501.00 FOR CONSTRUCTION JOINT AND CONTRACTION JOINT SCORE MARK DETAILS.

PROJECT NAME: MIDDLESEX	
PROJECT NUMBER: IM 089-2(41)	
FILE NAME: z07a052bdrabut2.dgn	PLOT DATE: 1/3/2015
PROJECT LEADER: R. HEBERT	DRAWN BY: S. MORGAN
DESIGNED BY: J. OLUND	CHECKED BY: T. POULIN
ABUTMENT #2 WINGWALL REINFORCEMENT	SHEET 86 OF 154

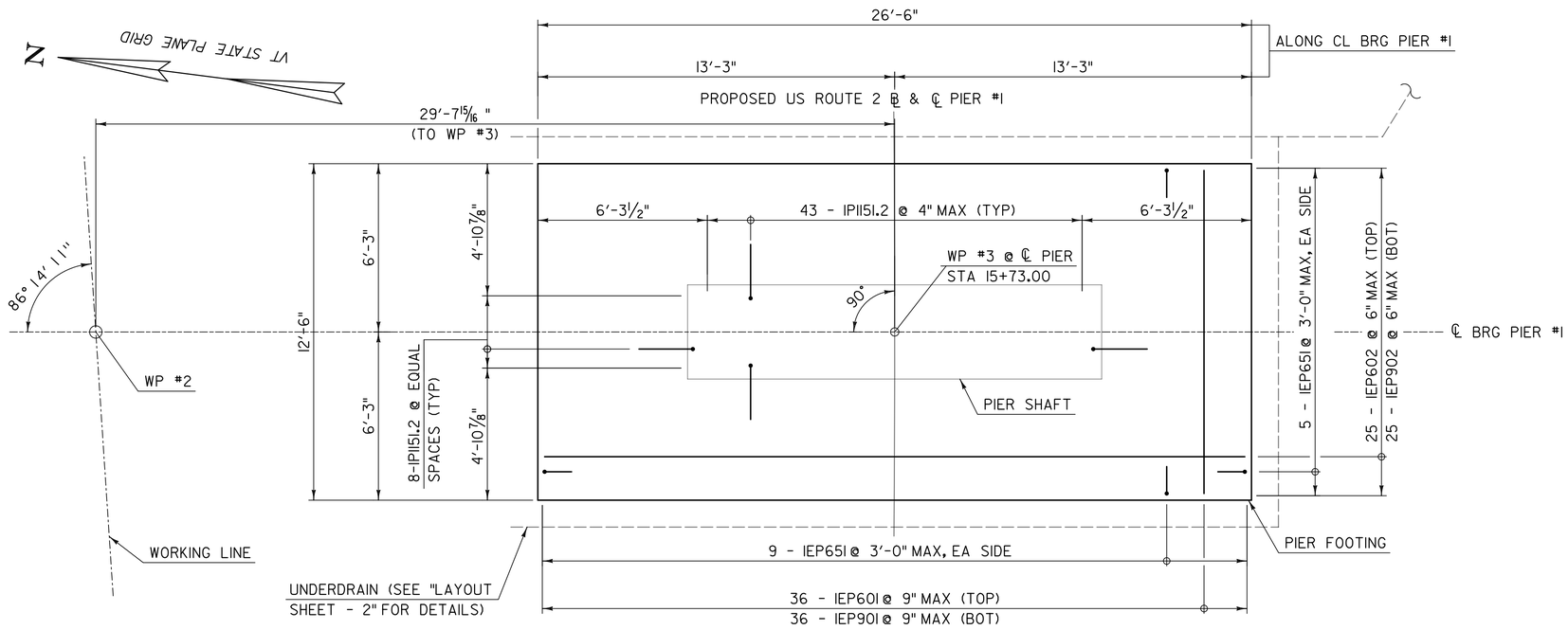

PIER #1 - PLAN

SCALE: 3/8" = 1'-0"

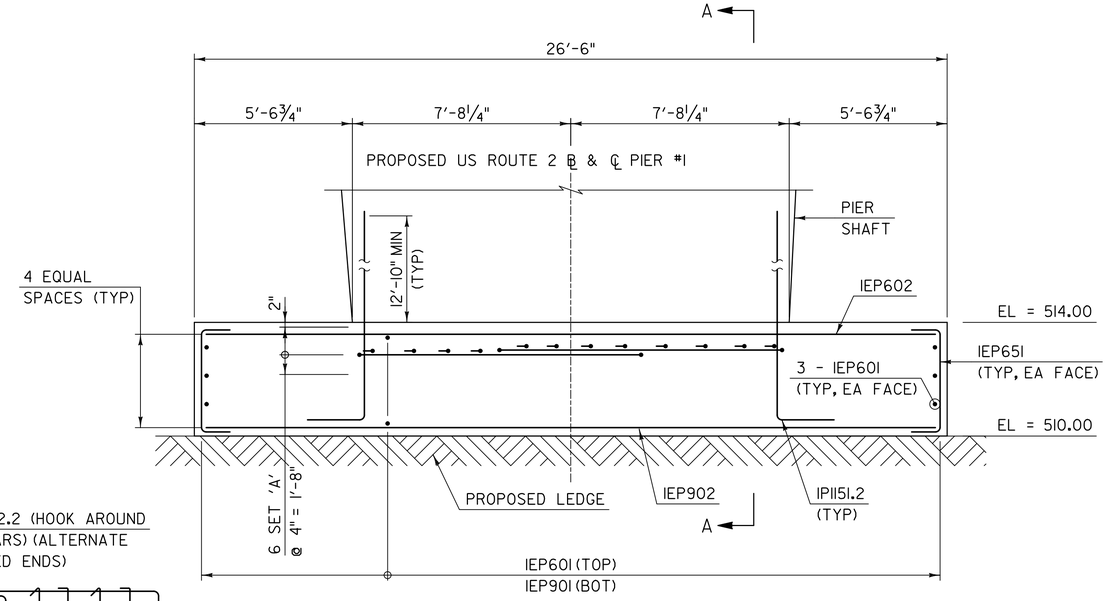

PIER #1 - ELEVATION

SCALE: 3/8" = 1'-0"

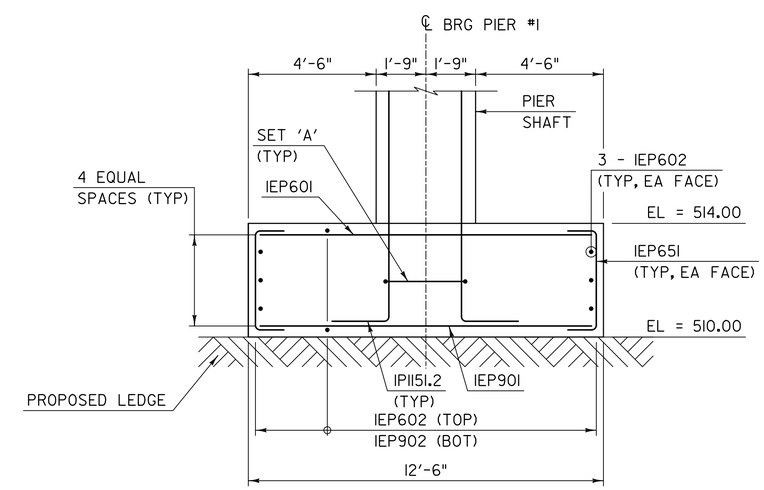

PIER #1 - SECTION A-A

SCALE: 3/8" = 1'-0"

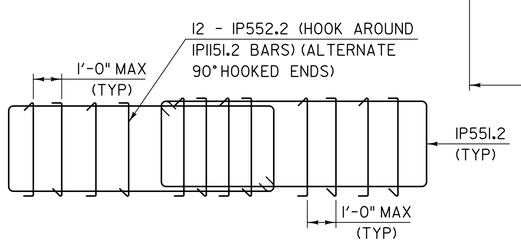

REINFORCING STEEL SET 'A'

NOT TO SCALE

(PLAN VIEW)

PROJECT NAME: MIDDLESEX	
PROJECT NUMBER: IM 089-2(41)	
FILE NAME: z07a052bdrpier1.dgn	PLOT DATE: 1/3/2015
PROJECT LEADER: R. HEBERT	DRAWN BY: S. MORGAN
DESIGNED BY: T. POULIN	CHECKED BY: J. OLUND
PIER #1 FOOTING PLAN & REINFORCEMENT	SHEET 87 OF 154

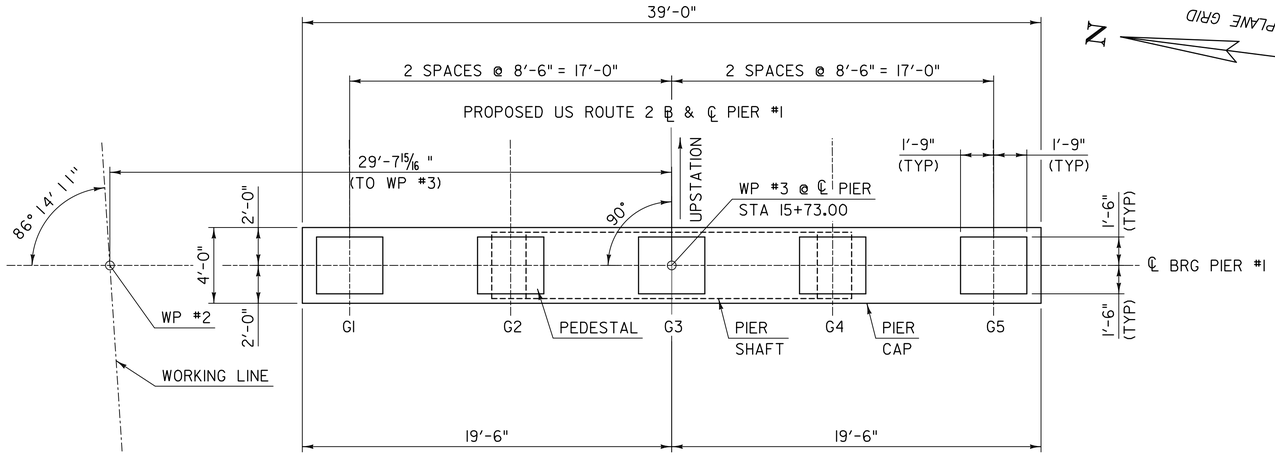

PIER #1 - CAP PLAN

SCALE: 1/4" = 1'-0"

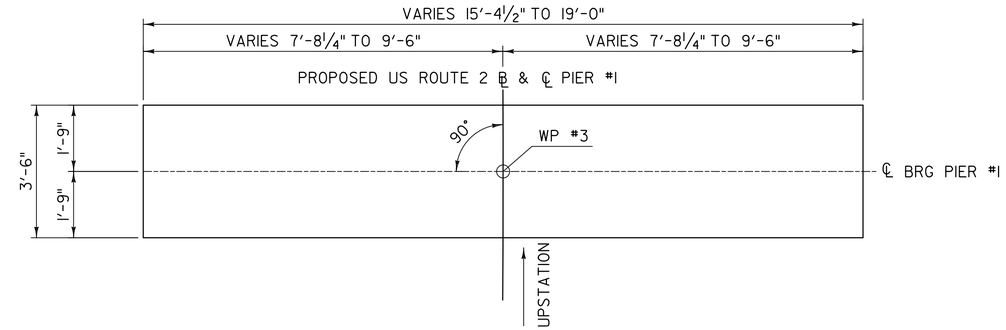

SECTION B-B

SCALE: 1/2" = 1'-0"

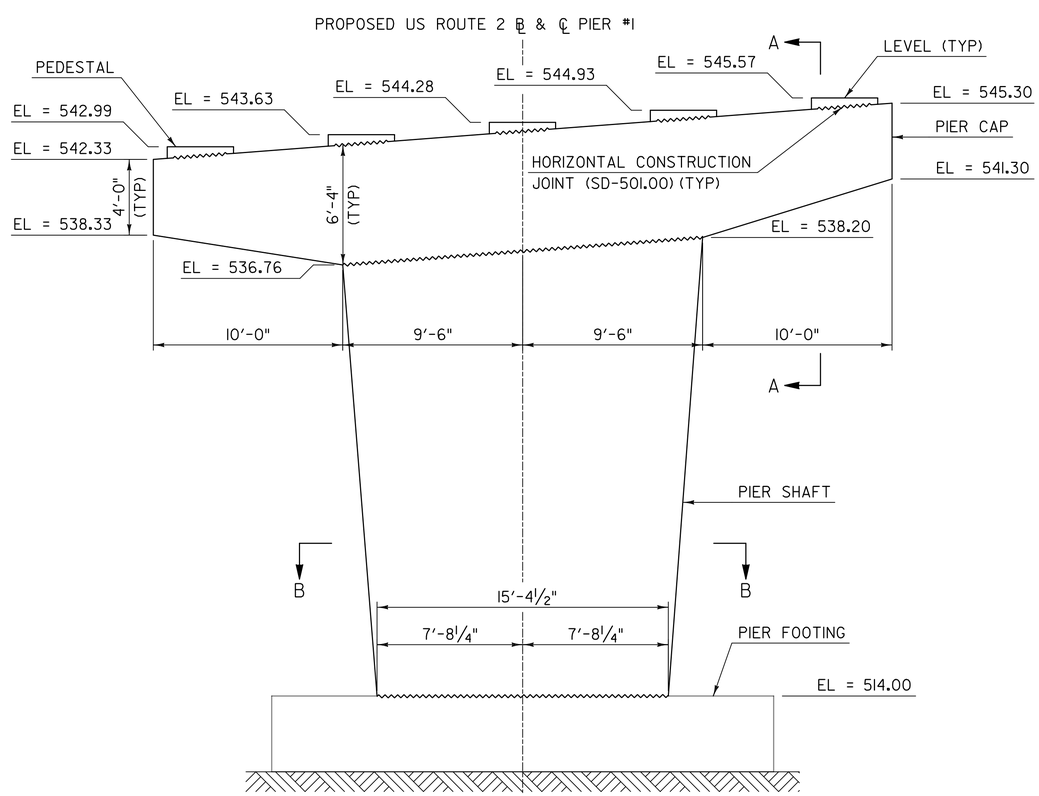

PIER #1 - ELEVATION

SCALE: 1/4" = 1'-0"

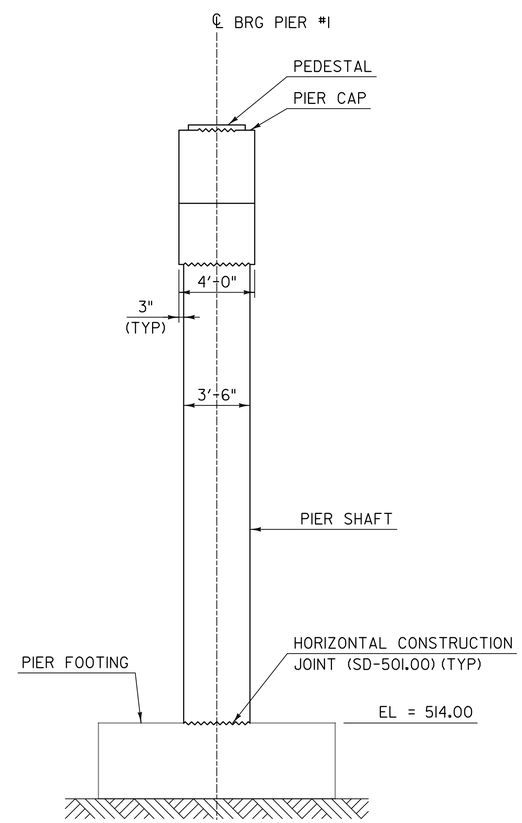

PIER #1 - SIDE ELEVATION

SCALE: 1/4" = 1'-0"

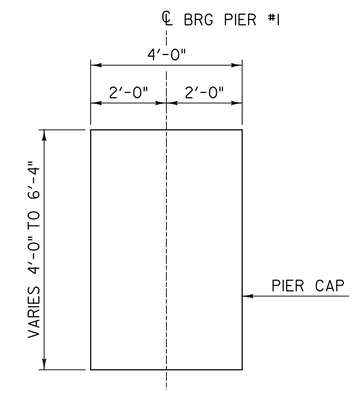

SECTION A-A

SCALE: 1/2" = 1'-0"

PROJECT NAME: MIDDLESEX	
PROJECT NUMBER: IM 089-2(41)	
FILE NAME: z07a052bdrpier1.dgn	PLOT DATE: 1/3/2015
PROJECT LEADER: R. HEBERT	DRAWN BY: S. MORGAN
DESIGNED BY: T. POULIN	CHECKED BY: J. OLUND
PIER #1 PLAN, ELEVATION & SECTIONS	SHEET 88 OF 154

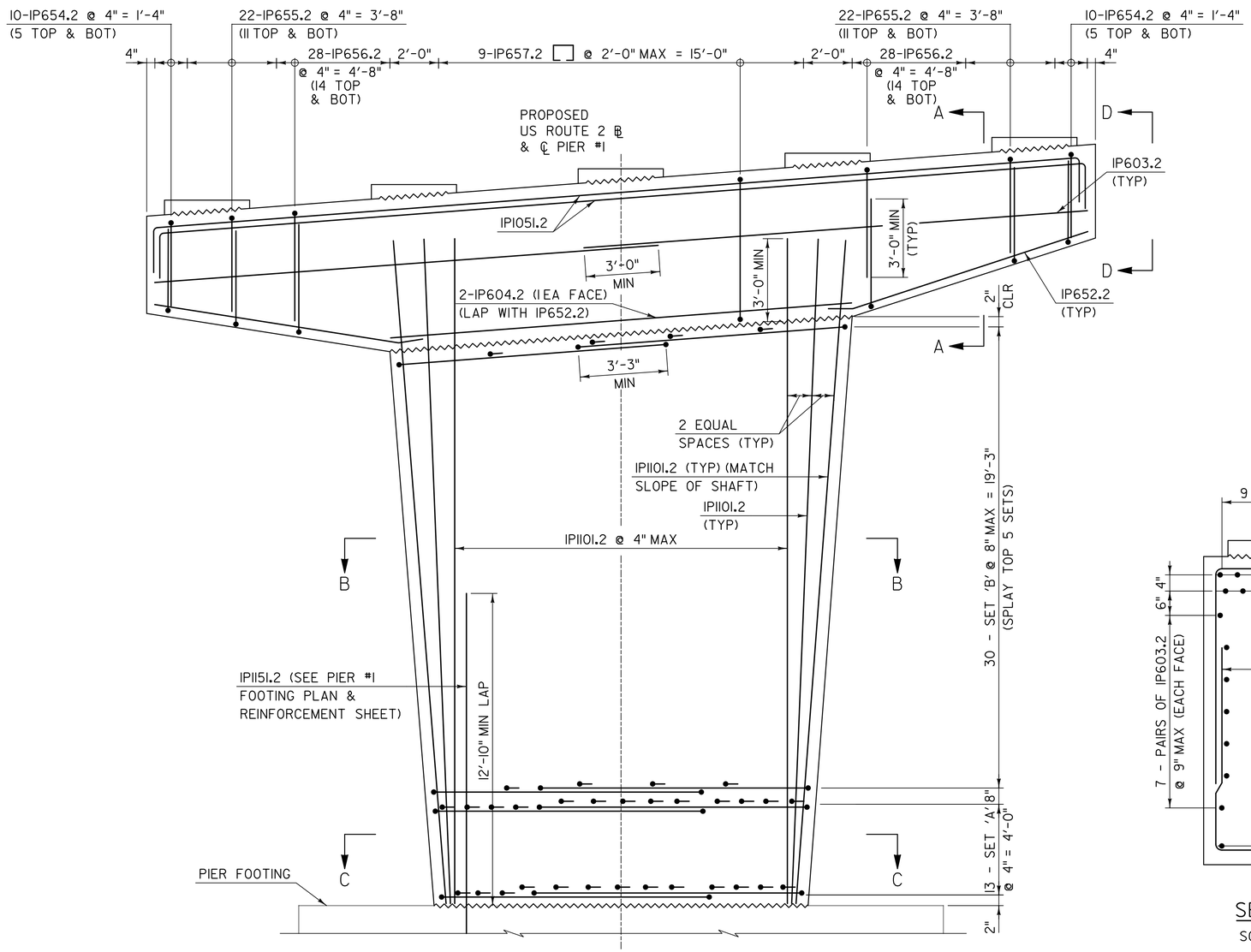

PIER #1 - ELEVATION

SCALE: 3/8" = 1'-0"

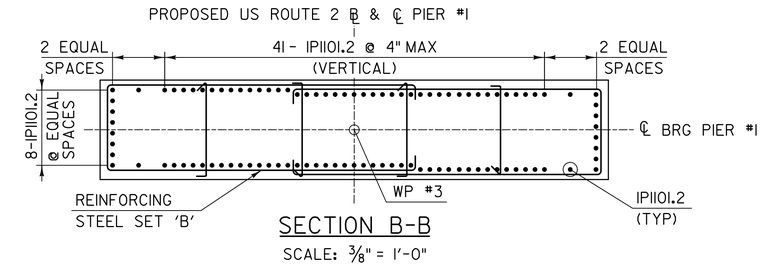

SECTION B-B

SCALE: 3/8" = 1'-0"

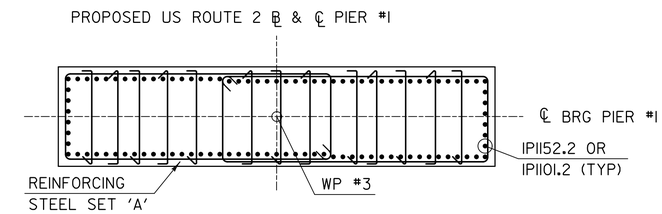

SECTION C-C

SCALE: 3/8" = 1'-0"

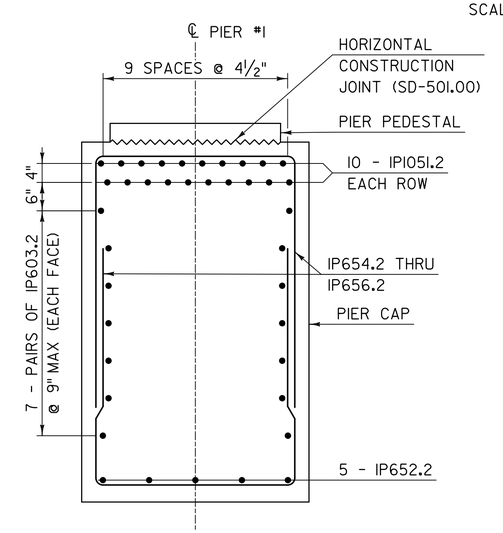

SECTION A-A

SCALE: 3/4" = 1'-0"

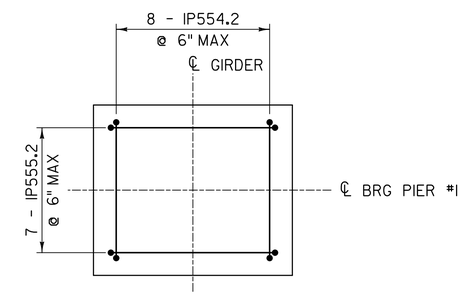

PEDESTAL REINFORCEMENT PLAN

SCALE 3/4" = 1'-0"

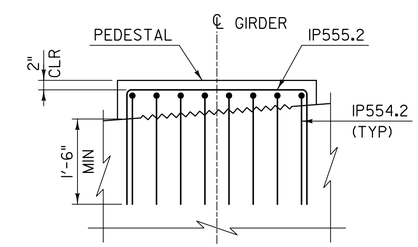

PEDESTAL REINFORCEMENT ELEVATION

SCALE 3/4" = 1'-0"

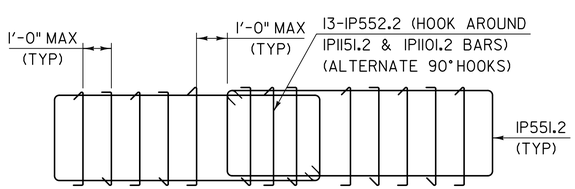

REINFORCING STEEL SET 'A'

NOT TO SCALE

(PLAN VIEW)

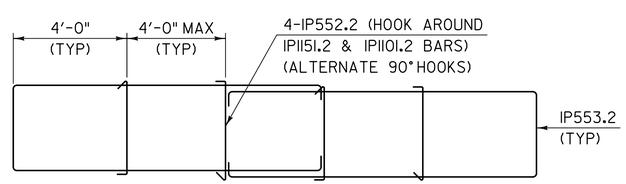

REINFORCING STEEL SET 'B'

NOT TO SCALE

(PLAN VIEW)

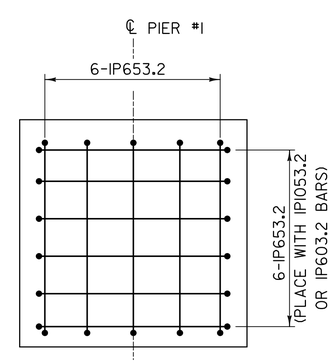

VIEW D-D

SCALE: 3/4" = 1'-0"

NOTES:

1. SPLICE IP1101.2 BARS ON INSIDE OF IP1151.2 BARS.
2. ADJUST SPACING OF REINFORCING BARS TO AVOID BEARING ANCHOR RODS.

PROJECT NAME: MIDDLESEX	
PROJECT NUMBER: IM 089-2(41)	
FILE NAME: z07a052bdrpier1.dgn	PLOT DATE: 1/3/2015
PROJECT LEADER: R. HEBERT	DRAWN BY: S. MORGAN
DESIGNED BY: T. POULIN	CHECKED BY: J. OLUND
PIER #1 REINFORCEMENT & DETAILS	SHEET 89 OF 154

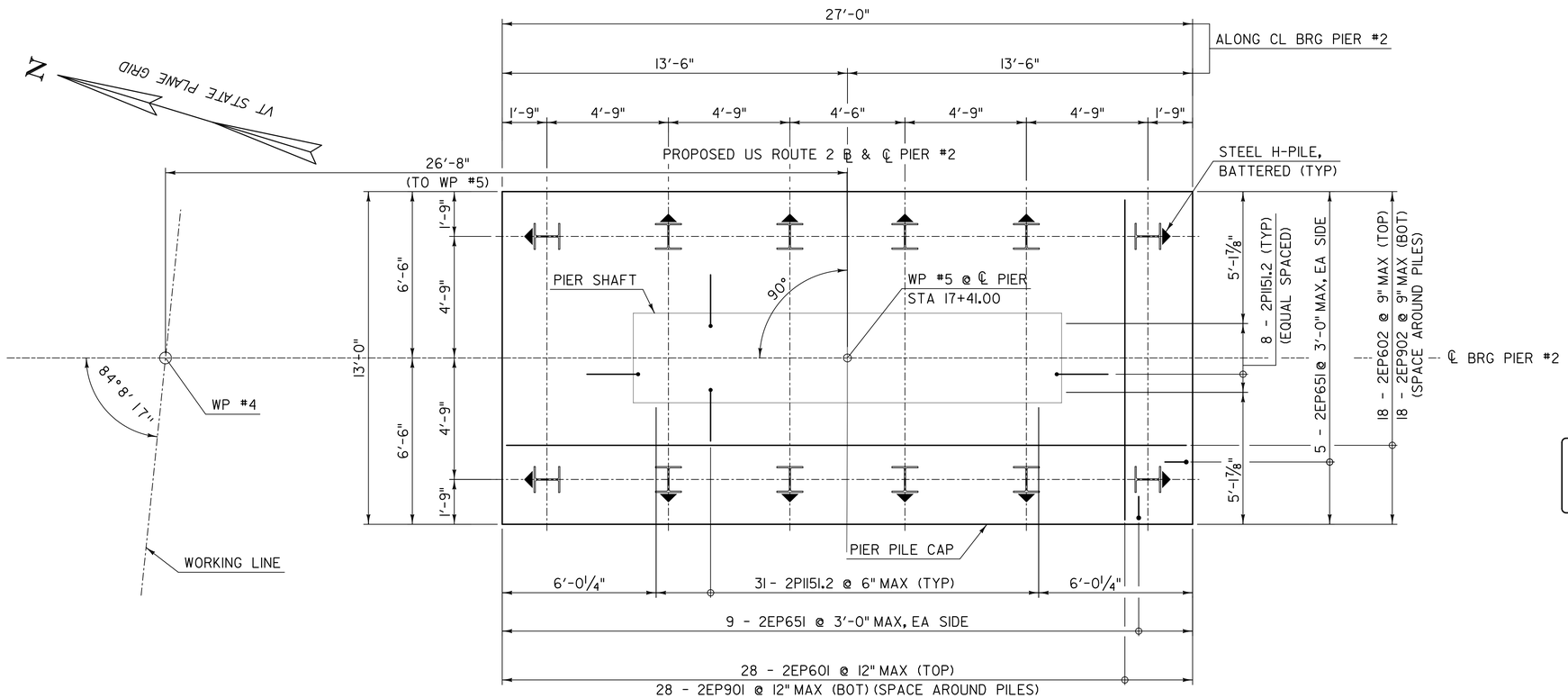

PIER #2 - PLAN

SCALE: 3/8" = 1'-0"

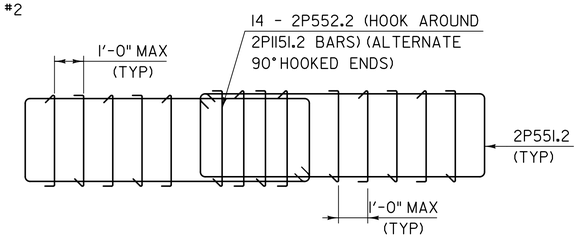

REINFORCING STEEL SET 'A'

NOT TO SCALE

(PLAN VIEW)

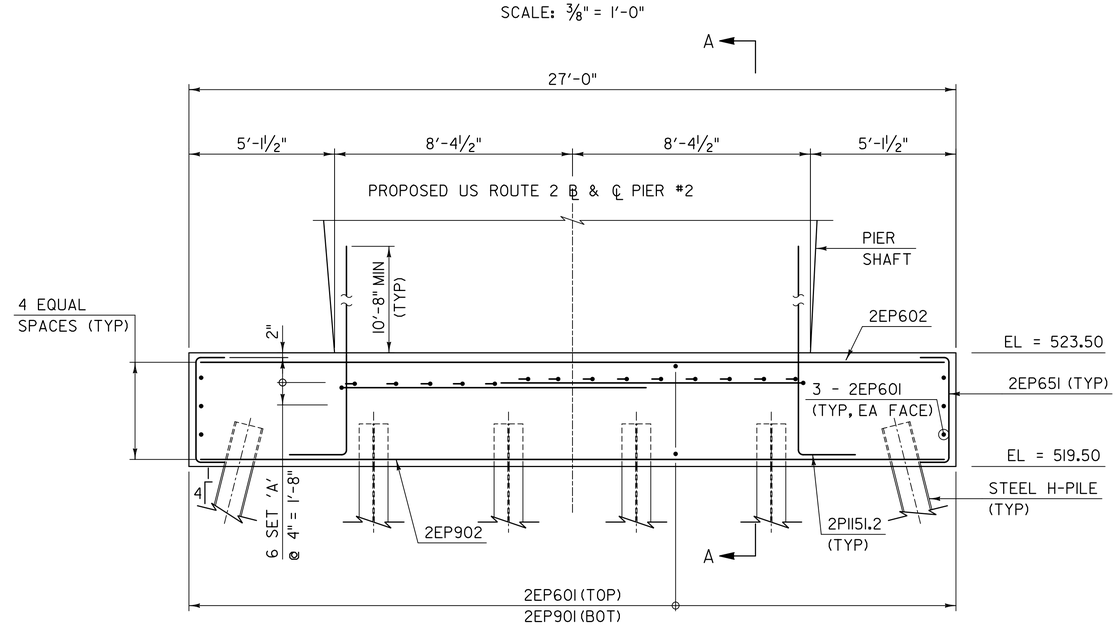

PIER #2 - ELEVATION

SCALE: 3/8" = 1'-0"

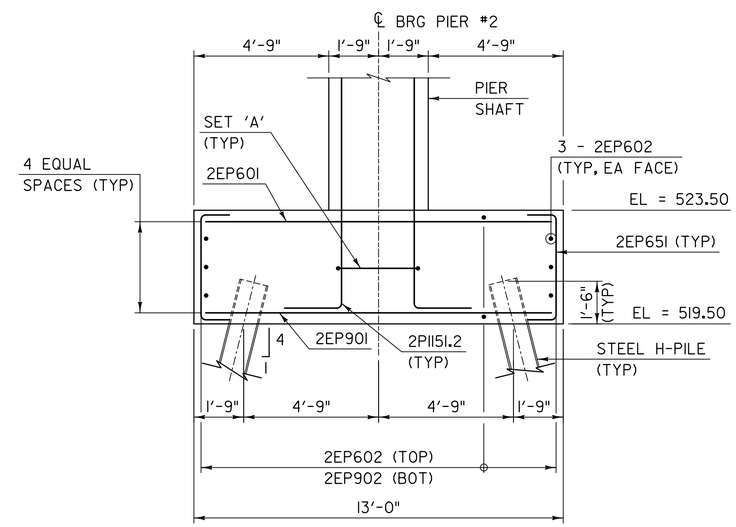

PIER #2 - SECTION A-A

SCALE: 3/8" = 1'-0"

PROJECT NAME:	MIDDLESEX
PROJECT NUMBER:	IM 089-2(41)

FILE NAME: z07a052bdrpier2.dgn	PLOT DATE: 1/3/2015
PROJECT LEADER: R. HEBERT	DRAWN BY: T. KELLEY
DESIGNED BY: T. POULIN	CHECKED BY: J. OLUND
PIER #2 PILE CAP PLAN & REINFORCEMENT	SHEET 90 OF 154

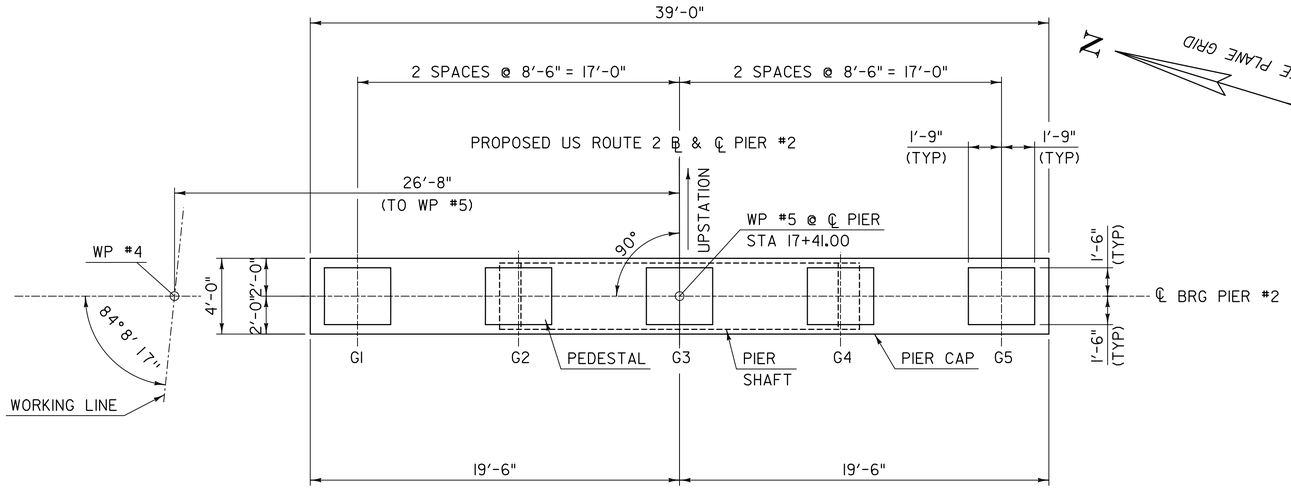

PIER #2 - CAP PLAN

SCALE: 1/4" = 1'-0"

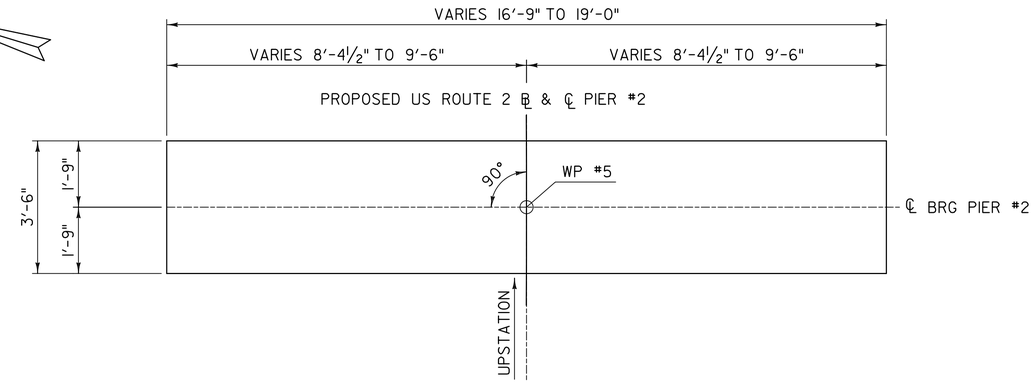

SECTION B-B

SCALE: 1/2" = 1'-0"

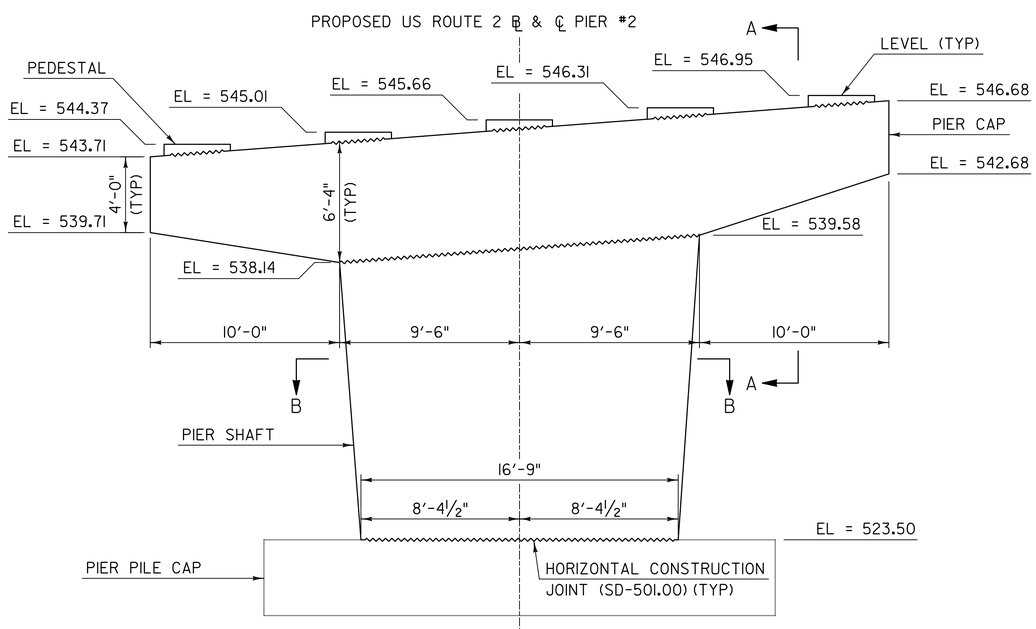

PIER #2 - ELEVATION

SCALE: 1/4" = 1'-0"

(PILES NOT SHOWN FOR CLARITY)

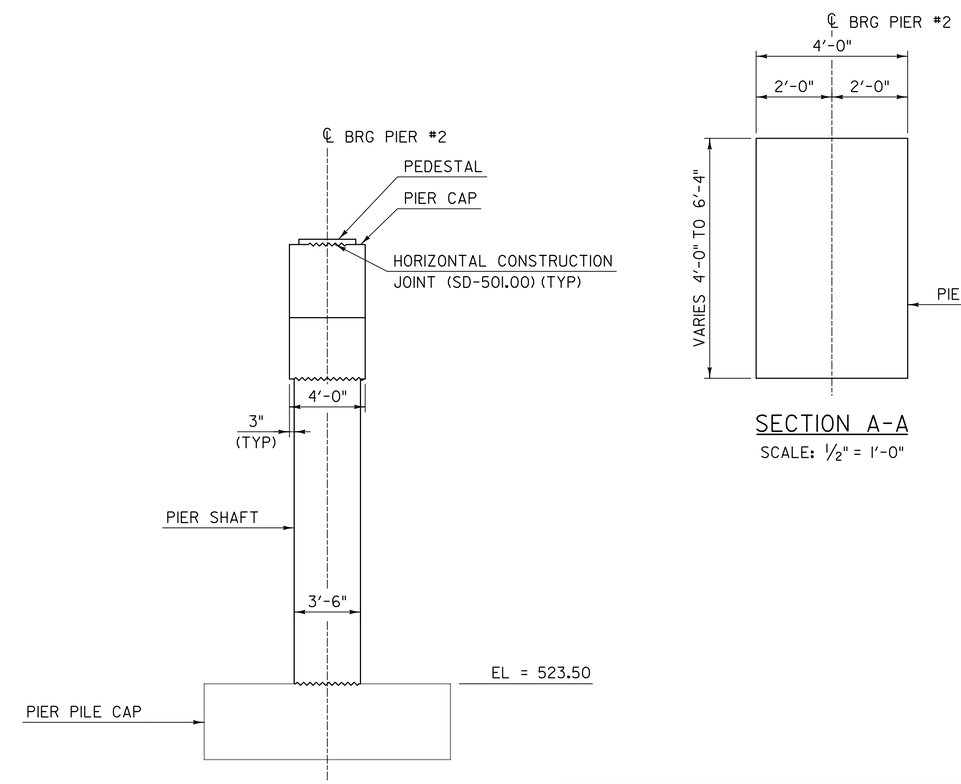

SECTION A-A

SCALE: 1/2" = 1'-0"

PIER #2 - SIDE ELEVATION

SCALE: 1/4" = 1'-0"

(PILES NOT SHOWN FOR CLARITY)

PROJECT NAME:	MIDDLESEX
PROJECT NUMBER:	IM 089-2(41)

FILE NAME: z07a052bdrpier2.dgn	PLOT DATE: 1/3/2015
PROJECT LEADER: R. HEBERT	DRAWN BY: T. KELLEY
DESIGNED BY: T. POULIN	CHECKED BY: J. OLUND
PIER #2 PLAN, ELEVATION & SECTIONS	SHEET 91 OF 154

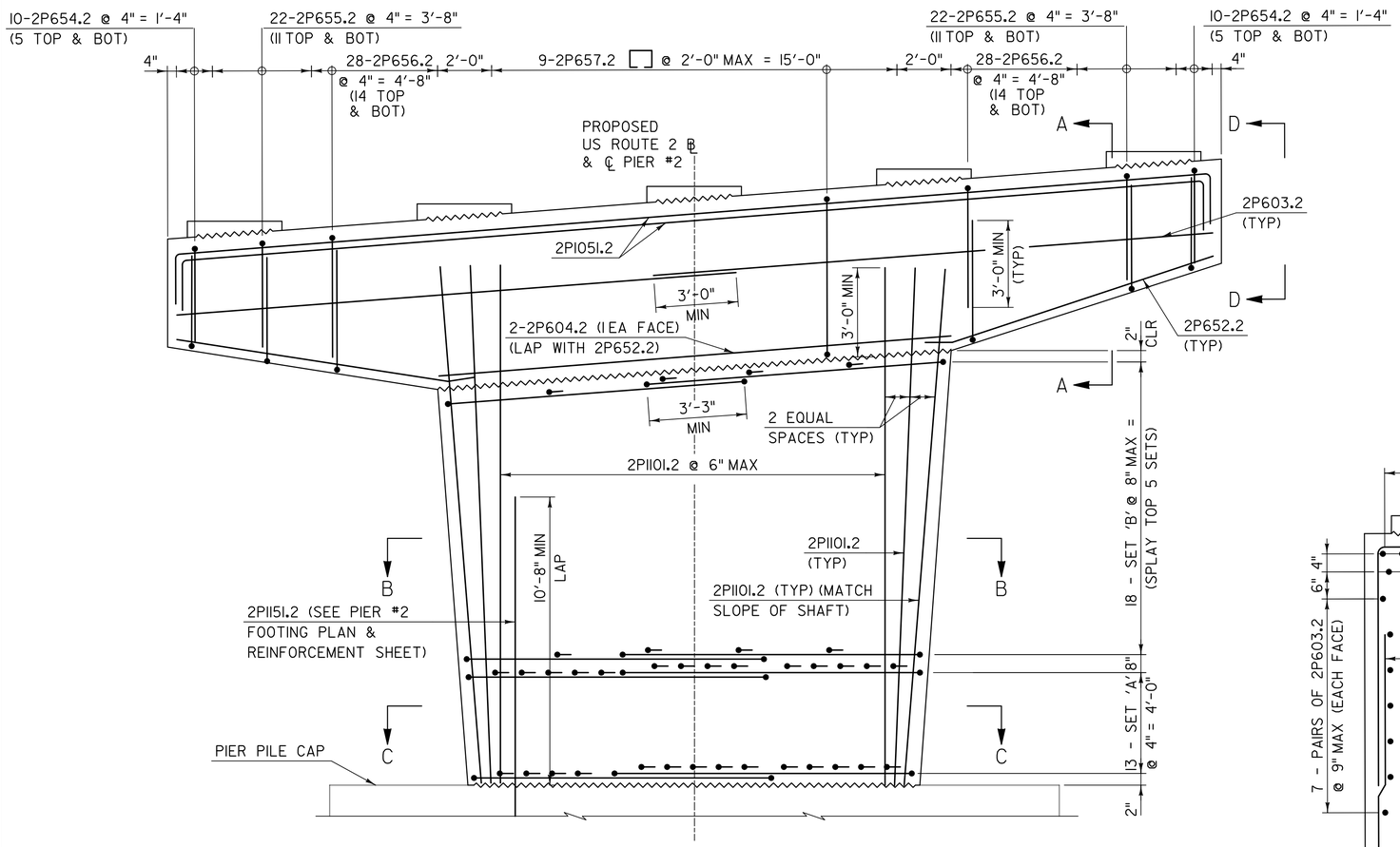

PIER #2 - ELEVATION

SCALE: 3/8" = 1'-0"

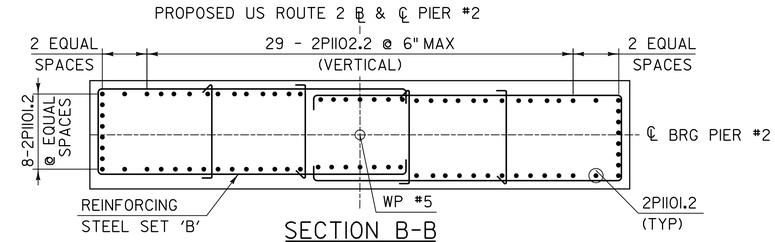

SECTION B-B

SCALE: 3/8" = 1'-0"

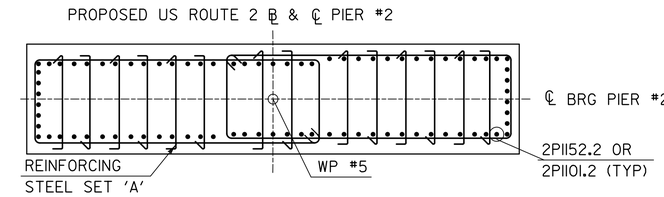

SECTION C-C

SCALE: 3/8" = 1'-0"

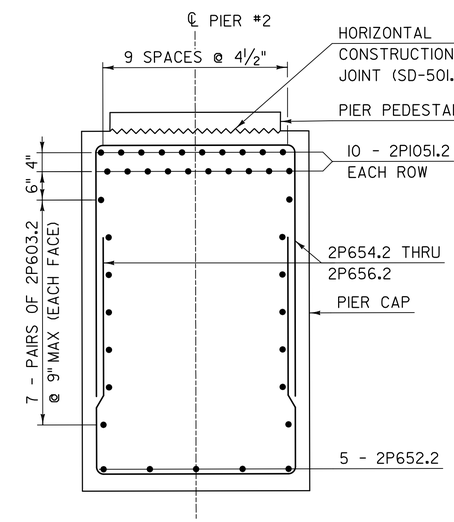

SECTION A-A

SCALE: 3/4" = 1'-0"

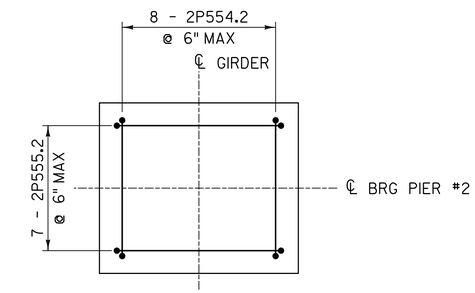

PEDESTAL REINFORCEMENT PLAN

SCALE 3/4" = 1'-0"

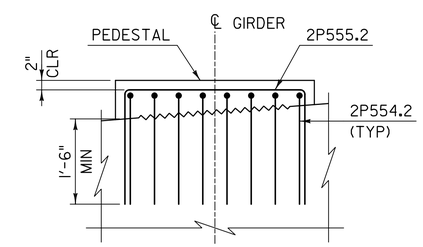

PEDESTAL REINFORCEMENT ELEVATION

SCALE 3/4" = 1'-0"

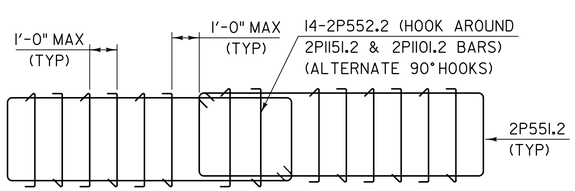

REINFORCING STEEL SET 'A'

NOT TO SCALE
(PLAN VIEW)

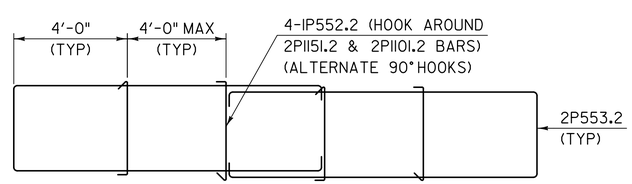

REINFORCING STEEL SET 'B'

NOT TO SCALE
(PLAN VIEW)

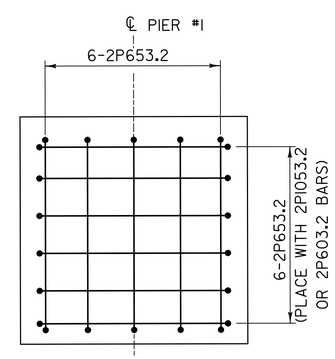

VIEW D-D

SCALE: 3/4" = 1'-0"

NOTES:

1. SPLICE 2P1101.2 BARS ON INSIDE OF 2P1151.2 BARS.
2. SPACE STEEL REINFORCING BARS AS NEEDED TO AVOID BEARING ANCHOR RODS.

PROJECT NAME: MIDDLESEX	
PROJECT NUMBER: IM 089-2(41)	
FILE NAME: z07a052bdrpier2.dgn	PLOT DATE: 1/3/2015
PROJECT LEADER: R. HEBERT	DRAWN BY: T. KELLEY
DESIGNED BY: T. POULIN	CHECKED BY: J. OLUND
PIER #2 REINFORCEMENT & DETAILS	SHEET 92 OF 154

MECHANICALLY STABILIZED EARTH RETAINING WALL NOTES:

1. THE CONTRACTOR SHALL DESIGN, DETAIL, AND CONSTRUCT A MECHANICALLY STABILIZED EARTH (MSE) WALL IN ACCORDANCE WITH THESE PLANS, THE SPECIAL PROVISIONS, AASHTO LRFD BRIDGE DESIGN SPECIFICATIONS, AND MANUFACTURER RECOMMENDATIONS. WHERE GUARDRAIL OR GUARDRAIL APPROACH SECTION ARE LOCATED WITHIN THE LIMITS OF THE MSE WALLS, THE MSE WALL SHALL BE DESIGNED TO RESIST TRAFFIC BARRIER LOADS AS SPECIFIED.

2. ALL LAYOUT DIMENSIONS ARE TO THE OUTSIDE FACE OF WALL.

3. FOR FOUNDATION SOILS AND NOMINAL BEARING RESISTANCE INFORMATION SEE GEOTECHNICAL ENGINEERING SERVICES REPORT DATED MARCH 12, 2014 PREPARED BY S.W. COLE ENGINEERING.

4. THE FOLLOWING ABUTMENT LOAD PARAMETERS SHALL BE INCORPORATED IN TO THE DESIGN AND CONSTRUCTION OF THE MSE WALLS:

   VERTICAL LOADS: (EVENLY DISTRIBUTED ACROSS ENTIRE FOOTING)

SERVICE BEARING PRESSURE (WITH LL+IM):	4.25 KSF
STRENGTH BEARING PRESSURE (MAX, WITH LL+IM):	5.60 KSF
STRENGTH BEARING PRESSURE (MIN, WITHOUT LL+IM):	2.20 KSF

   HORIZONTAL LOADS:

LONGITUDINAL BRAKING LOADS:	45.9 KIP
LONGITUDINAL THERMAL LOADS:	156.5 KIP
TRANSVERSE WIND LOADS:	52.1 KIP

   VERTICAL LOADS ACCOUNT FOR DEAD LOAD (DC+DW), LIVE LOAD PLUS IMPACT (LL+IM), EARTH LOAD (EH), AND OVERTURNING EFFECTS RESULTING FROM THE NOTED HORIZONTAL LOADS AS WELL AS EARTH LOAD. LONGITUDINAL FORCES ACT PARALLEL WITH EXPANSION CHORD.

5. IN THE EVENT THAT BEDROCK IS ENCOUNTERED SHALLOWER THAN THE RECOMMENDED MINIMUM MSE WALL EMBEDMENT DEPTH, THE CONCRETE LEVELING PAD AND THE SELECT GRANULAR BACKFILL SHALL BEAR ON A 6 INCH THICK LEVELING LAYER OF CRUSHED STONE OVERLYING THE BEDROCK SURFACE.

6. CRUSHED STONE SHALL MEET THE REQUIREMENTS OF SUBSECTION 704.02c. PAYMENT FOR CRUSHED STONE SHALL BE MADE UNDER ITEM 900.675, "SPECIAL PROVISION (MECHANICALLY STABILIZED EARTH RETAINING WALL)."

7. GIVEN THE VARIABILITY IN THE BEDROCK DEPTH, THERE IS THE POSSIBILITY THAT BEDROCK COULD RISE ABOVE THE TOP OF THE LEVELING PAD WITHIN THE REINFORCED ZONE. WHERE BEDROCK REMOVAL IS REQUIRED FOR WALL INSTALLATION, BEDROCK REMOVAL LIMITS SHALL BE APPROVED BY THE ENGINEER AND SHALL BE PAID UNDER ITEM 203.16, "SOLID ROCK EXCAVATION."

8. WITHIN THE PLAN LIMITS OF THE REINFORCED SOIL ZONE, TOPSOIL AND ORGANIC MATERIALS SHALL BE ENTIRELY REMOVED. PAYMENT FOR REMOVAL SHALL BE INCLUDED UNDER RELATED CONTRACT ITEMS.

9. THE CONTRACTOR IS RESPONSIBLE FOR GRADUALLY DEFLECTING THE UPPER REINFORCING STRIPS DOWNWARD TO AVOID CONFLICTS WITH THE APPROACH SLAB. THE CONTRACTOR'S ATTENTION IS DIRECTED ESPECIALLY TO THE EFFECTS OF SUPERELEVATION.

10. THE PANELS SHALL HAVE A NOMINAL SIZE OF 4.5 FT WIDE AND 4.5 TALL, OR GREATER. NO ARCHITECTURAL FINISH IS REQUIRED.

11. THE CONTRACTOR SHALL DETERMINE THE LEVELING PAD ELEVATIONS AND LENGTHS.

12. CONCRETE FOR THE CAST-IN-PLACE COPING, LEVELING PAD, AND HEADWALL SHALL BE CONCRETE, HIGH PERFORMANCE CLASS B IN ACCORDANCE WITH SECTION 501. REINFORCING STEEL SHALL BE LEVEL 1, EPOXY COATED IN ACCORDANCE WITH SECTION 507. COSTS ASSOCIATED WITH FURNISHING AND INSTALLING REINFORCING STEEL AND CONCRETE FOR COPING, LEVELING PADS, AND HEADWALL SHALL BE INCLUDED IN THE BID PRICE FOR ITEM 900.670, "SPECIAL PROVISION (MECHANICALLY STABILIZED EARTH RETAINING WALL)".

13. REINFORCING STEEL DOWELS EXTENDING FROM MSE WALL PANELS IN TO THE CAST IN-PLACE COPING SHALL BE CAST INTEGRALLY WITH THE PANELS - DRILLING AND GROUTING OF REINFORCING DOWELS WILL NOT BE ALLOWED.

14. CONTRACTION JOINTS SHALL BE PROVIDED IN THE CAST IN-PLACE CONCRETE COPING AT 20'-0" MAXIMUM SPACINGS AND SHALL ALIGN WITH JOINTS BETWEEN ADJACENT PANELS. REINFORCING STEEL WITHIN THE CAST IN-PLACE COPING SHALL BE CONTINUOUS THROUGH CONTRACTION JOINTS.

15. A 30 MIL GEOTEXTILE MEMBRANE SHALL BE INSTALLED ON TOP OF THE SELECT FILL. THE MEMBRANE SHALL SLOPE AWAY FROM THE MSE WALLS AND ABUTMENT BACKWALL TO CONVEY WATER TO AN UNDERDRAIN PIPE. A 6 INCH FOLD OF MEMBRANE SHALL BE ATTACHED TO THE BACK FACE OF THE MSE WALL WITH AN ADHESIVE. THE MEMBRANE AND ADHESIVE SHALL MEET THE REQUIREMENTS OF THE MANUFACTURER. GEOTEXTILE MEMBRANE, ADHESIVE, AND ANY EQUIPMENT NECESSARY FOR INSTALLATION SHALL BE INCLUDED IN ITEM 900.670, "SPECIAL PROVISION (MECHANICALLY STABILIZED EARTH RETAINING WALL)."

16. ANY WALL REINFORCING STRIPS LOCATED ABOVE THE GEOMEMBRANE SHALL HAVE A DESIGN LIFE OF 125 YEARS USING CORROSION RATES GIVEN IN AASHTO LRFD BRIDGE DESIGN SPECIFICATIONS FOR NON-AGGRESSIVE SOIL.

17. UNDERDRAIN PIPES SHALL BE PERFORATED AND MEET THE REQUIREMENTS OF SUBSECTION 710.06. THE DRAINAGE AGGREGATE, FILTER FABRIC, AND PIPE AND ANY FITTINGS OR ADHESIVES NECESSARY FOR INSTALLATION SHALL BE PAID UNDER ITEM 900.670, "SPECIAL PROVISION (MECHANICALLY STABILIZED EARTH RETAINING WALL)."

18. FILTER FABRIC MEETING THE REQUIREMENTS OF SECTION 720 FOR GEOTEXTILE UNDER STONE FILL SHALL BE ADHERED TO THE BACK FACE OF THE MSE WALL PANELS AT ALL HORIZONTAL AND VERTICAL JOINTS BEWEEN PANELS. FILTER FABRIC SHALL NOMINALLY BE 18 INCHES WIDE AND CENTERED ON THE JOINT.

19. ALTHOUGH NOT SHOWN IN MSE WALL ELEVATIONS IN THESE PLANS, SLIP JOINTS ARE REQUIRED AT ALL WALL INTERSECTIONS THAT FORM ANGLES. ADDITIONAL SLIP JOINTS MAY BE USED AS REQUIRED BY THE MSE WALL SUPPLIER.

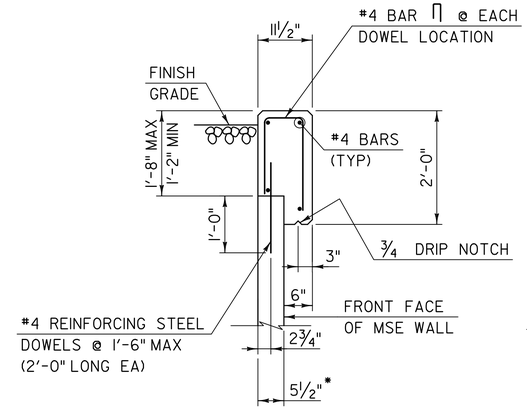

CAST-IN-PLACE CONCRETE COPING SECTION

SCALE: ¾" = 1'-0"

*ASSUMED WALL PANEL THICKNESS. ADJUSTMENTS SHALL BE MADE TO FRONT FACE OF WALL LOCATIONS AND APPLICABLE DETAILS IF OTHER WALL PANEL THICKNESS IS USED.

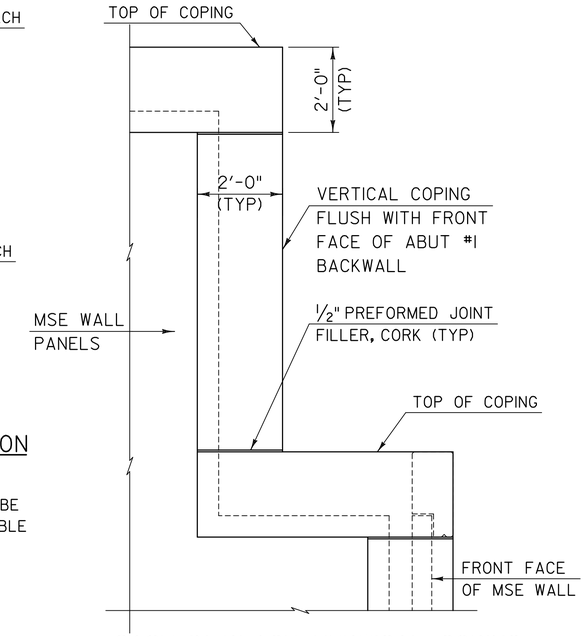

CAST-IN-PLACE VERTICAL COPING PARTIAL ELEVATION AT ABUTMENT #1

SCALE: ¼" = 1'-0"

MINIMUM REINFORCING STRIP LENGTH	
MSE WALL NO.	REQUIRED REINFORCING LENGTH**
1, NORTH SIDE	L = 1.0*H
1, EAST &SOUTH	L = 1.8*H
2	L = 0.7*H
3	L = 1.8*H

** L = REINFORCING STRIP LENGTH;
H = EXPOSED HEIGHT OF WALL

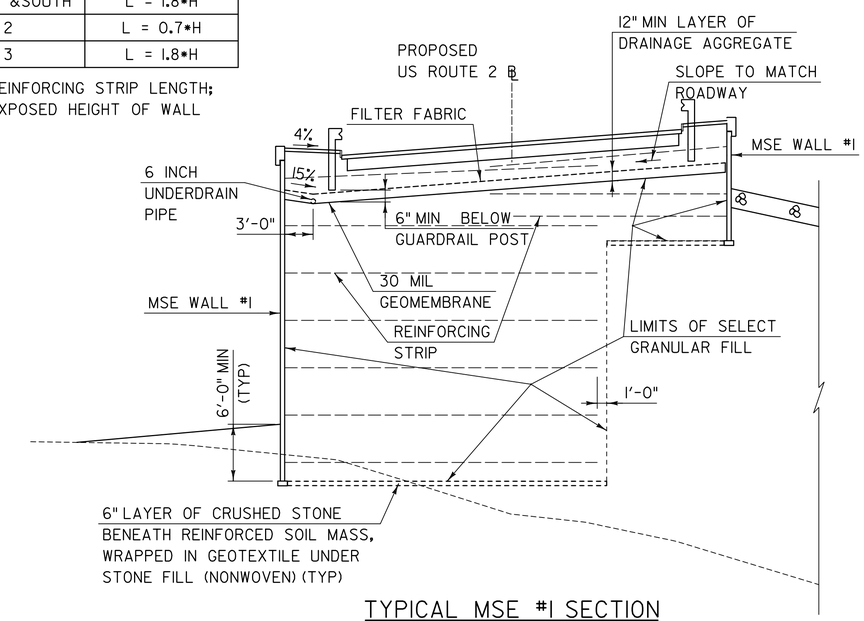

TYPICAL MSE #1 SECTION

SCALE: ⅛" = 1'-0"

PROJECT NAME:	MIDDLESEX
PROJECT NUMBER:	IM 089-2(41)

FILE NAME: z07a052bdrrwdet.dgn	PLOT DATE: 1/3/2015
PROJECT LEADER: R. HEBERT	DRAWN BY: S. MORGAN
DESIGNED BY: J. OLUND	CHECKED BY: R. HEBERT
MSE WALL NOTES & DETAILS	SHEET 93 OF 154

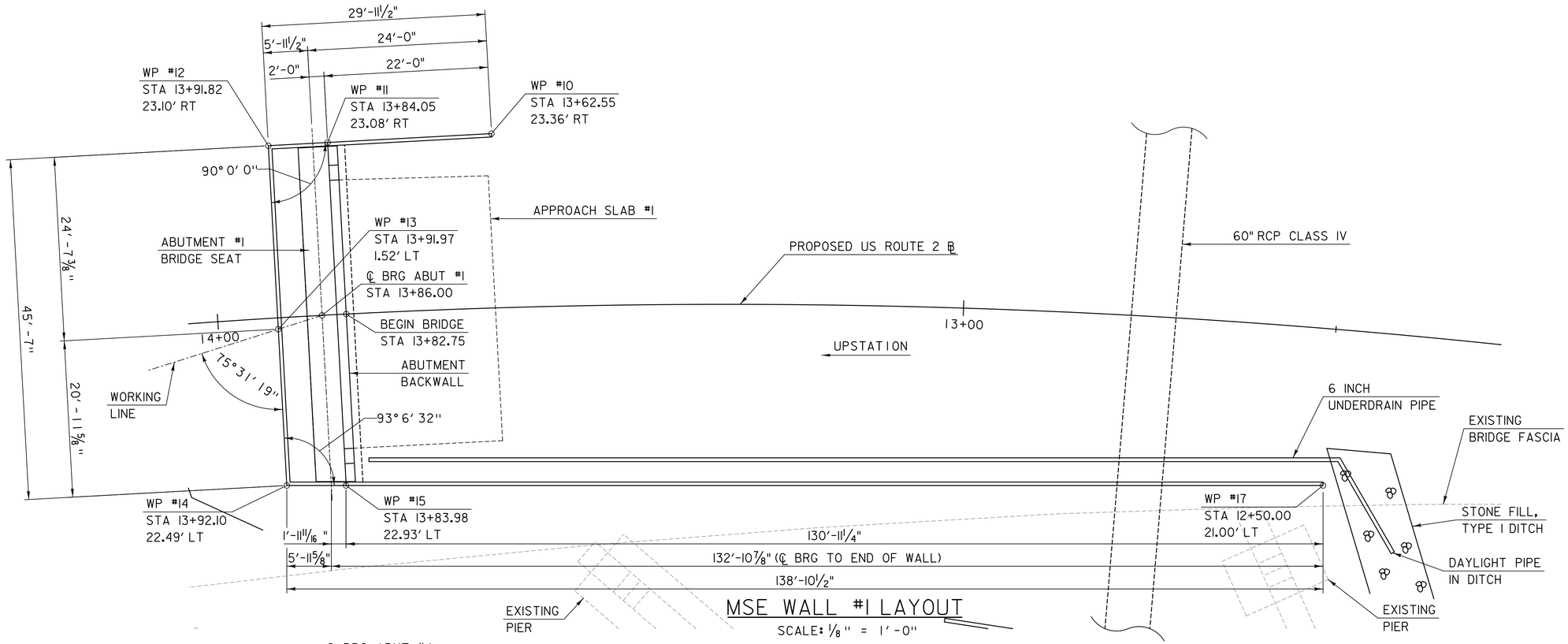

MSE WALL #1 LAYOUT

SCALE: ⅛" = 1'-0"

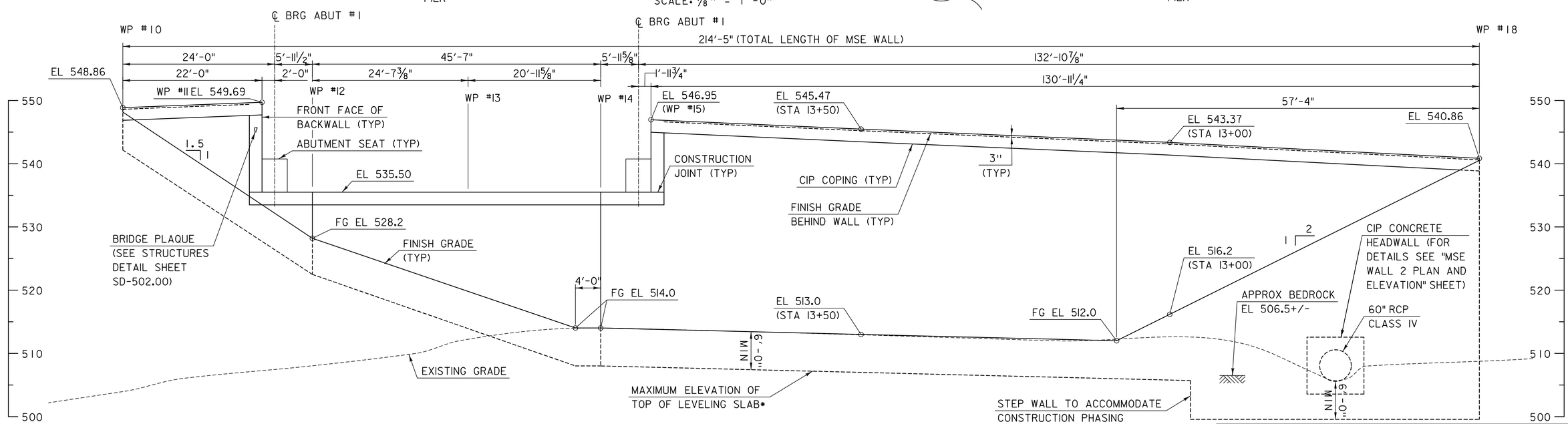

MSE WALL #1 DEVELOPED ELEVATION

SCALE: ⅛" = 1'-0"

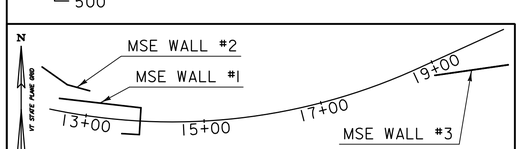

*TOP OF LEVELING PAD SHALL BE LOCATED 6'-0" MINIMUM BELOW GRADE, EXCEPT WHERE BEDROCK IS ENCOUNTERED ABOVE THIS ELEVATION. MINIMUM 6" X 12" LEVELING PAD SHALL THEN BEAR ON BEDROCK.

PROJECT NAME: MIDDLESEX	
PROJECT NUMBER: IM 089-2(41)	
FILE NAME: z07a052bdrrwl.dgn	PLOT DATE: 1/3/2015
PROJECT LEADER: R. HEBERT	DRAWN BY: S. MORGAN
DESIGNED BY: J. OLUND	CHECKED BY: T. POULIN
MSE WALL 1 PLAN & ELEVATION	SHEET 94 OF 154

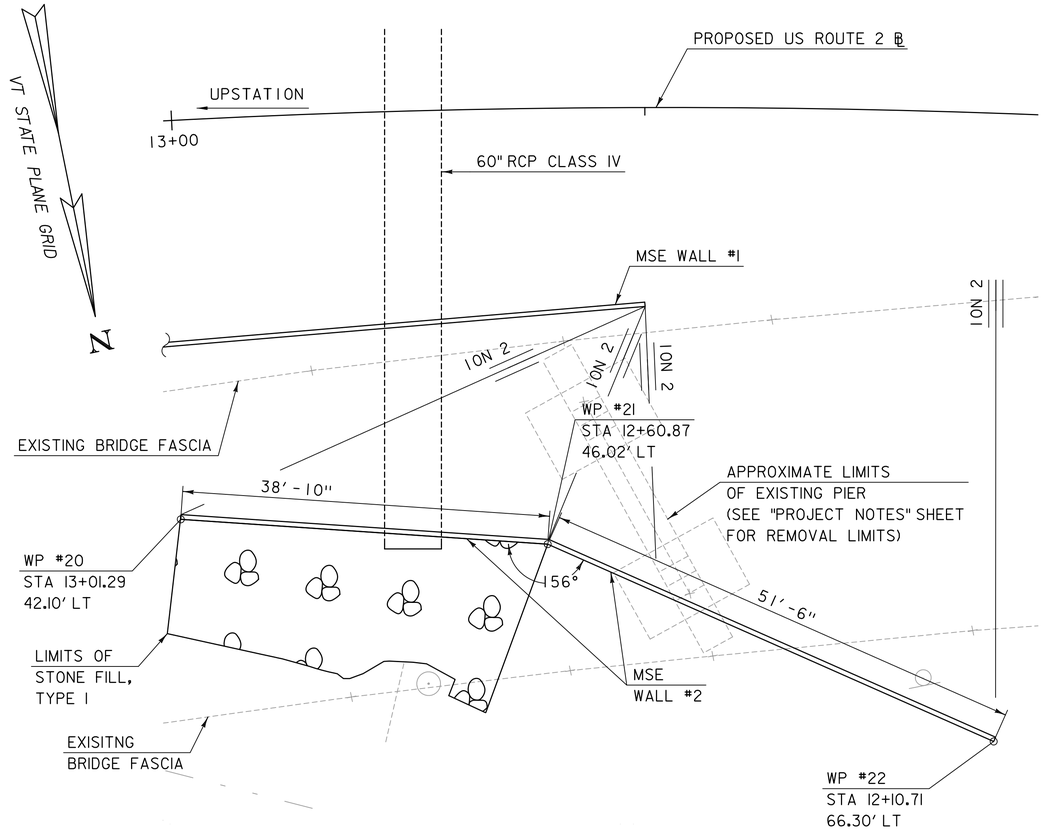

MSE WALL #2 LAYOUT

SCALE 1/8" = 1'-0"

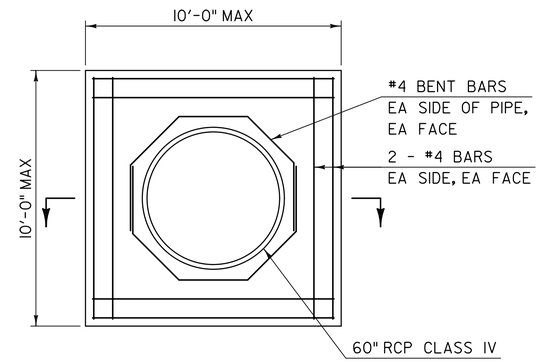

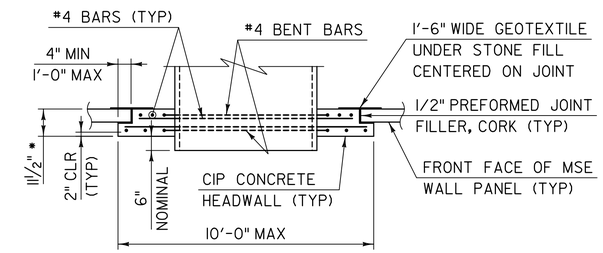

* DIMENSIONS ASSUME 5 1/8" THICK MSE WALL PANEL FACING. ADJUST DIMENSIONS FOR OTHER PANEL FACING THICKNESS.

CAST-IN-PLACE CONCRETE HEADWALL DETAILS

SCALE: 3/8" = 1'-0"

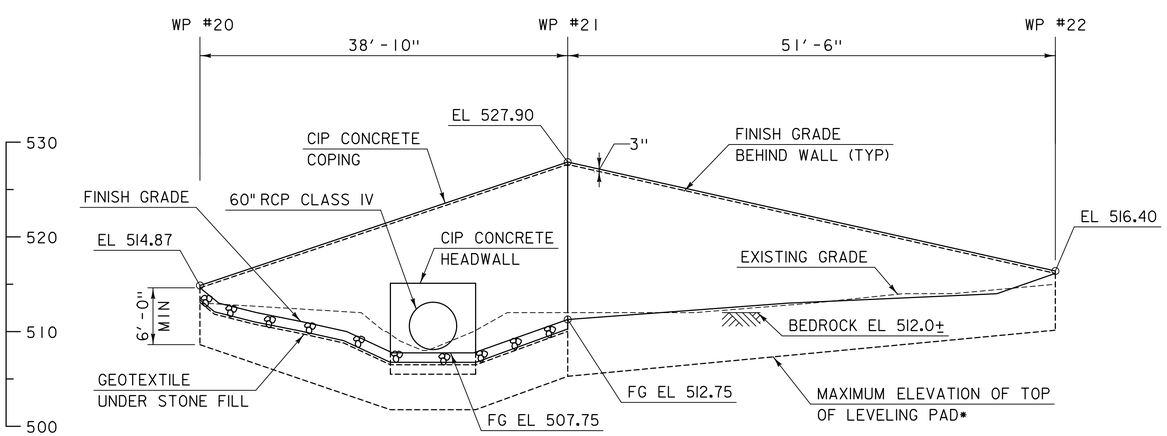

MSE WALL #2 DEVELOPED ELEVATION

SCALE 1/8" = 1'-0"

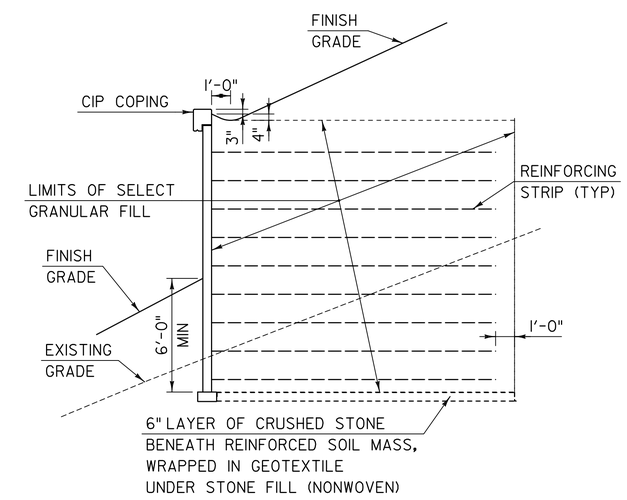

MSE WALL #2 SECTION

SCALE: 1/4" = 1'-0"

*TOP OF LEVELING PAD SHALL BE LOCATED 6'-0" MINIMUM BELOW GRADE, EXCEPT WHERE BEDROCK IS ENCOUNTERED ABOVE THIS ELEVATION. MINIMUM 6" X 12" LEVELING PAD SHALL THEN BEAR ON BEDROCK.

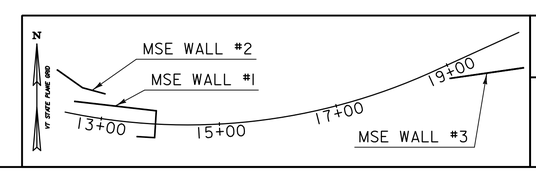

PROJECT NAME: MIDDLESEX	
PROJECT NUMBER: IM 089-2(41)	
FILE NAME: z07a052bdrrw2.dgn	PLOT DATE: 1/3/2015
PROJECT LEADER: R. HEBERT	DRAWN BY: S. MORGAN
DESIGNED BY: J. OLUND	CHECKED BY: R. HEBERT
MSE WALL 2 PLAN & ELEVATION	SHEET 95 OF 154

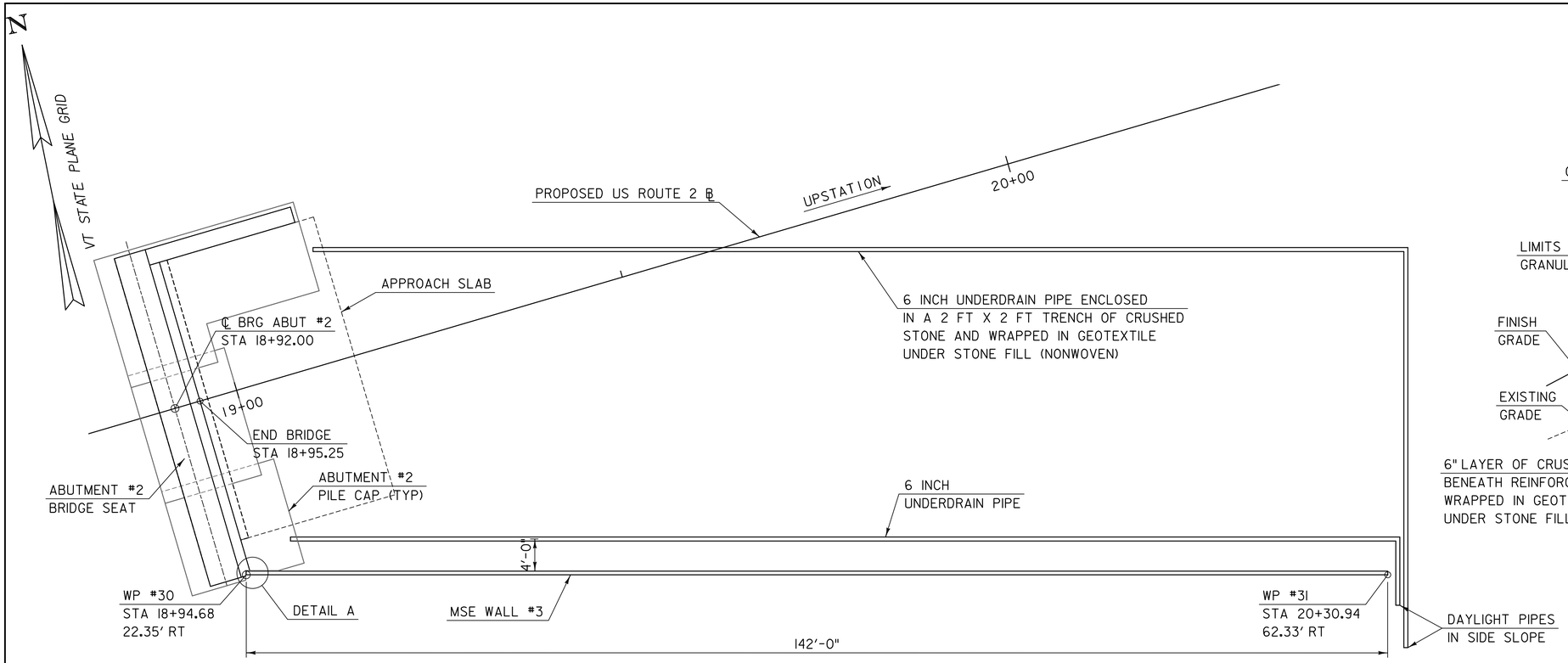

MSE WALL #3 LAYOUT

SCALE 1/8" = 1'-0"

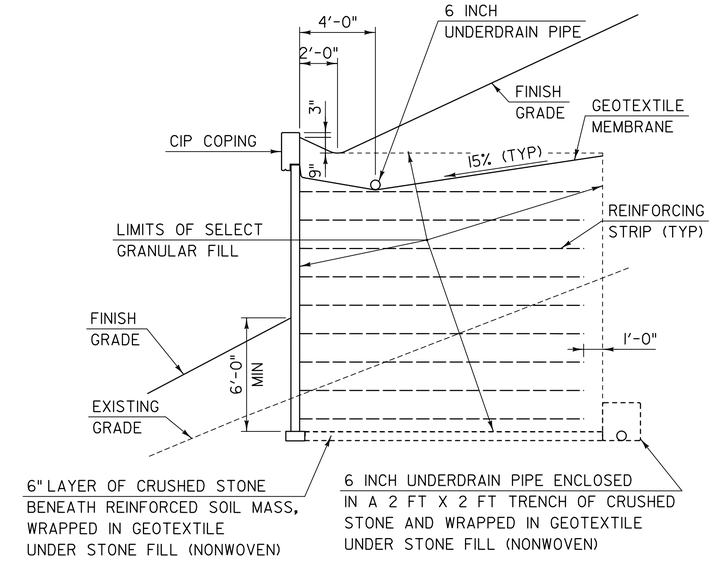

MSE WALL #3 SECTION

SCALE: 1/4" = 1'-0"

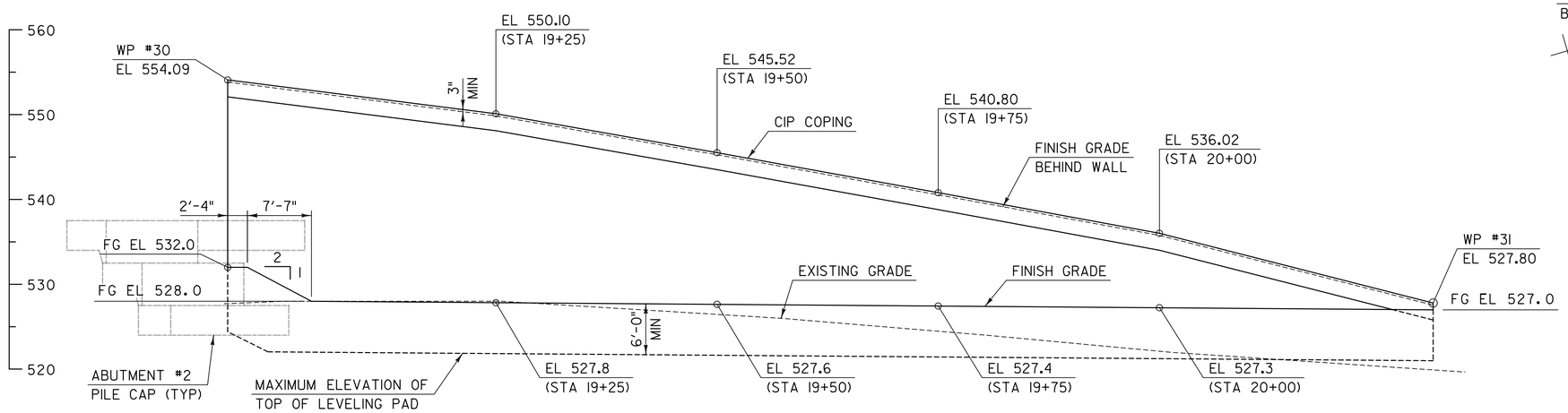

MSE WALL #3 ELEVATION

SCALE 1/8" = 1'-0"

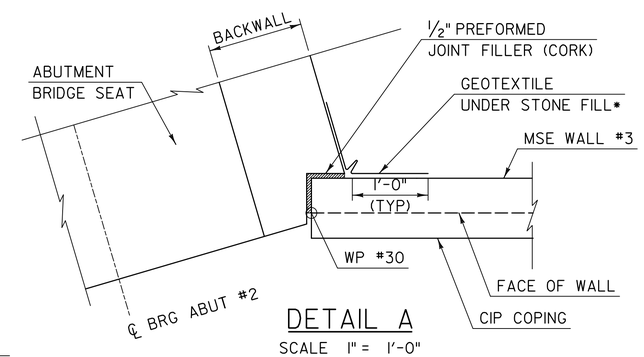

DETAIL A

SCALE 1" = 1'-0"

*GEOTEXTILE UNDER STONE FILL SHALL BE ADHERED TO THE BACK FACE OF MSE WALL PANELS AND ABUTMENT. PAYMENT SHALL BE MADE UNDER ITEM 900.670, "SPECIAL PROVISION (MECHANICALLY STABILIZED EARTH RETAINING WALL)."

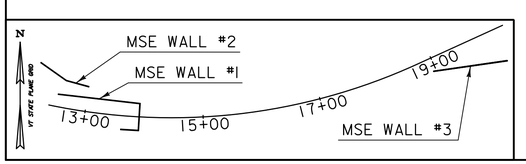

PROJECT NAME: MIDDLESEX	
PROJECT NUMBER: IM 089-2(41)	
FILE NAME: z07a052bdrrw3.dgn	PLOT DATE: 1/3/2015
PROJECT LEADER: R. HEBERT	DRAWN BY: S. MORGAN
DESIGNED BY: J. OLUND	CHECKED BY: T. POULIN
MSE WALL 3 PLAN & ELEVATION	SHEET 96 OF 154

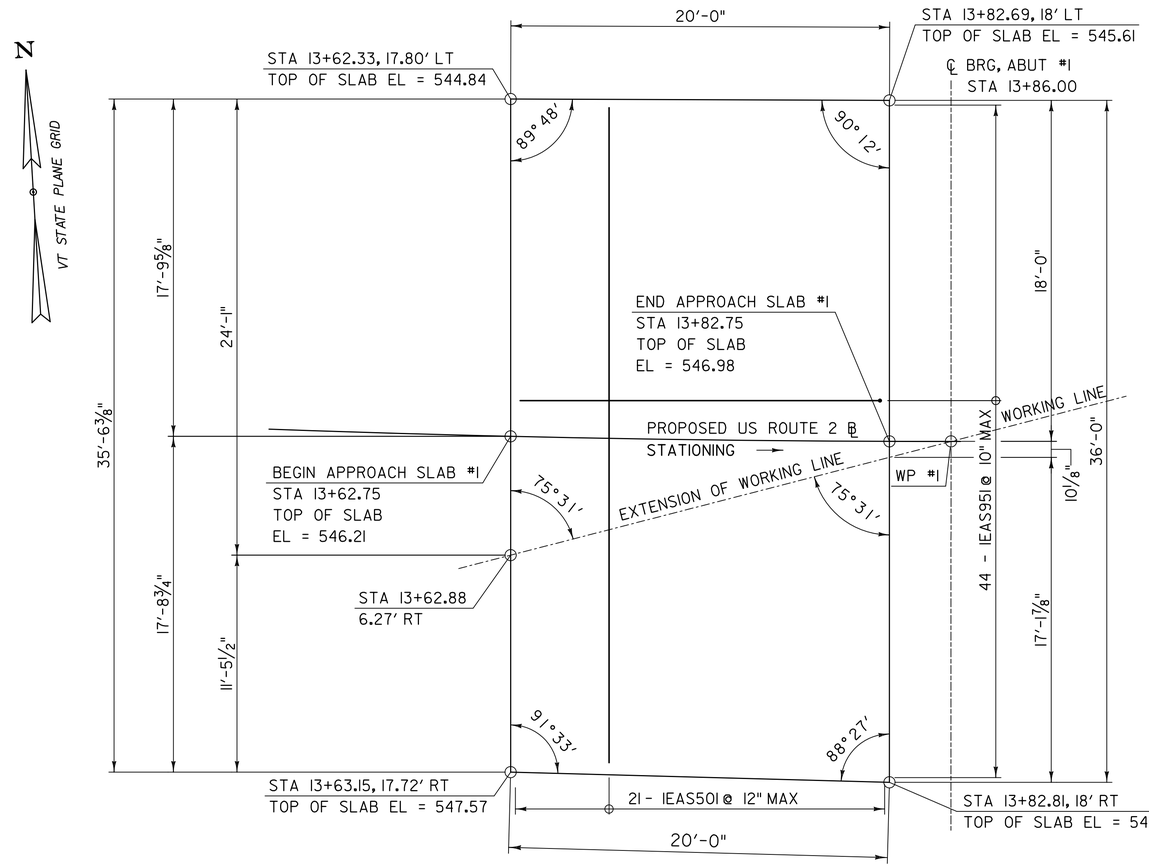

APPROACH SLAB #1

SCALE: ¼" = 1'-0"

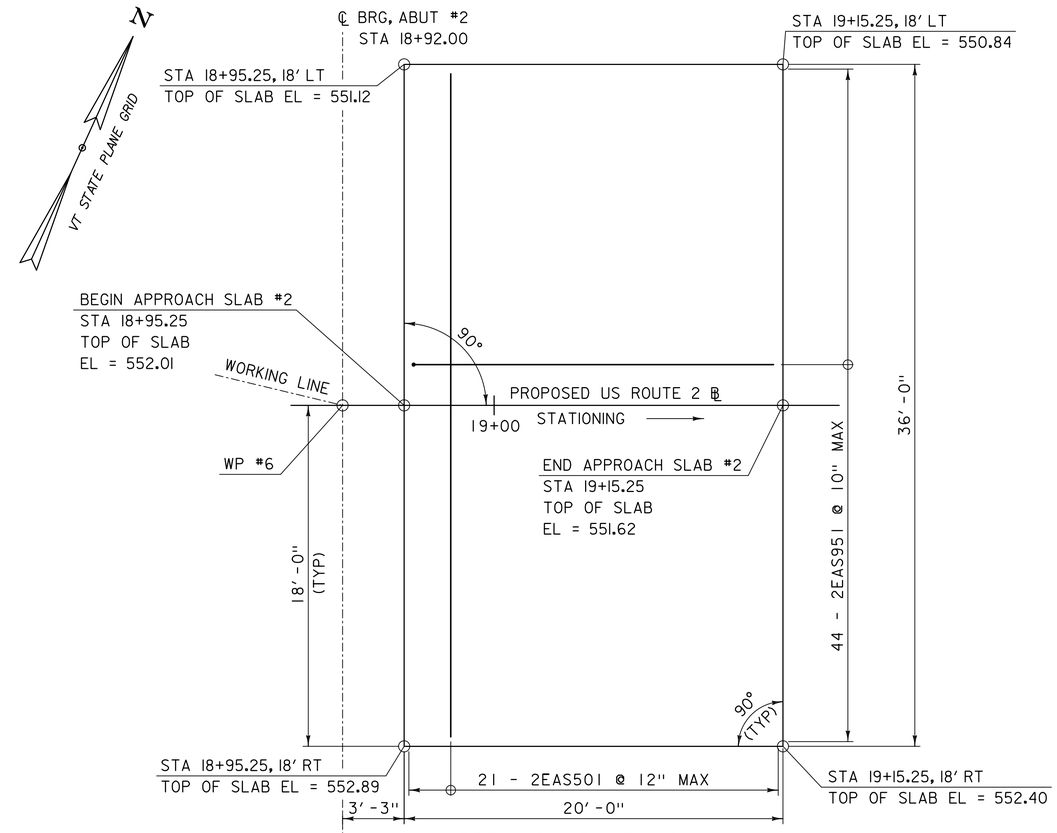

APPROACH SLAB #2

SCALE: ¼" = 1'-0"

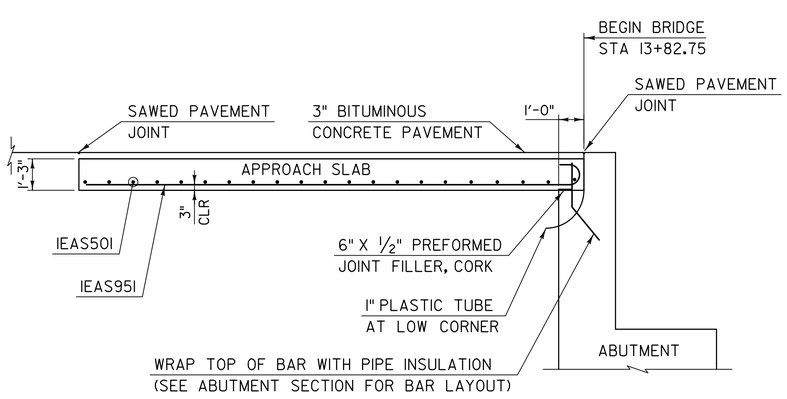

APPROACH SLAB #1 DETAIL

SCALE: ⅜" = 1'-0"
(APPROACH SLAB #2 SIMILAR)

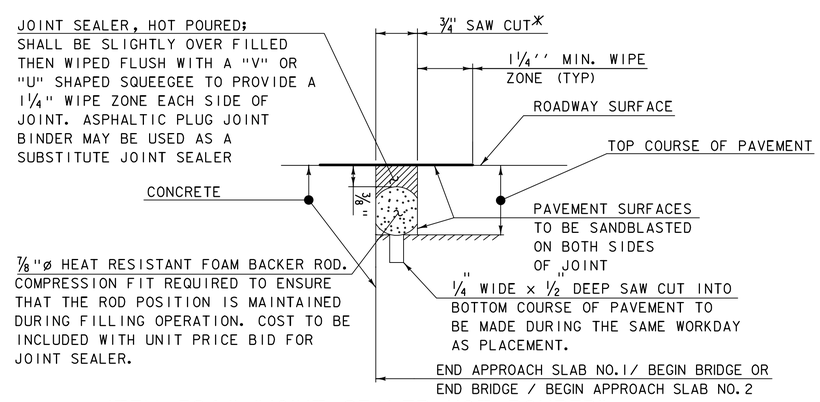

ITEM 524.11, "JOINT SEALER, HOT POURED"
SAWED PAVEMENT JOINT DETAIL

(NOT TO SCALE)

*JOINT IS TO BE LOCATED ACCURATELY BY STRING LINING, OR OTHER MEANS, PRIOR TO PAVING, SO THAT THE SAW CUTS WILL BE MADE DIRECTLY OVER THE END OF CONCRETE DECK. JOINT SHALL BE CUT DRY IN A SINGLE PASS AND BE SEALED WITHIN 24 HOURS OR PRIOR TO EXPOSURE TO TRAFFIC. JOINT SHALL BE CLEANED PRIOR TO APPLYING THE JOINT SEALER.

PROJECT NAME: MIDDLESEX	
PROJECT NUMBER: IM 089-2(41)	
FILE NAME: z07a052bdrapprslab.dgn	PLOT DATE: 1/3/2015
PROJECT LEADER: R. HEBERT	DRAWN BY: S. MORGAN
DESIGNED BY: T. POULIN	CHECKED BY: J. OLUND
APPROACH SLAB DETAILS	SHEET 97 OF 154

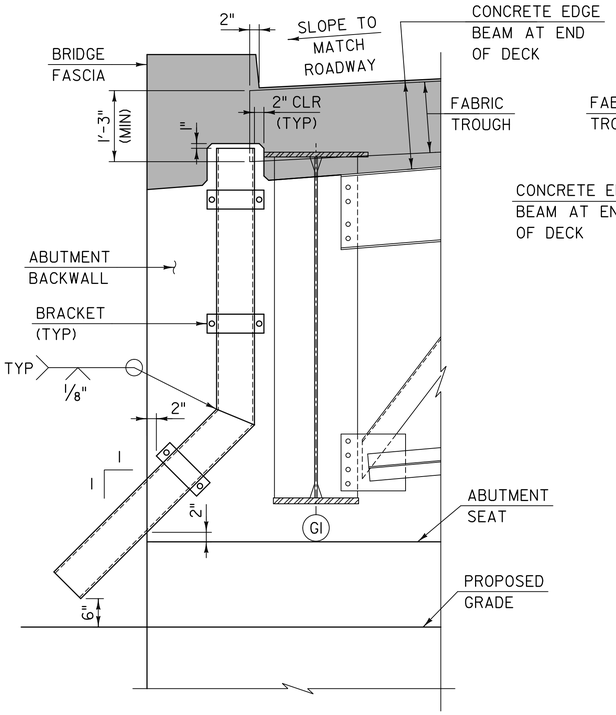

DOWNSPOUT ELEVATION AT ABUTMENT #2

SCALE: 3/4" = 1'- 0"
(LOOKING UP STATION)

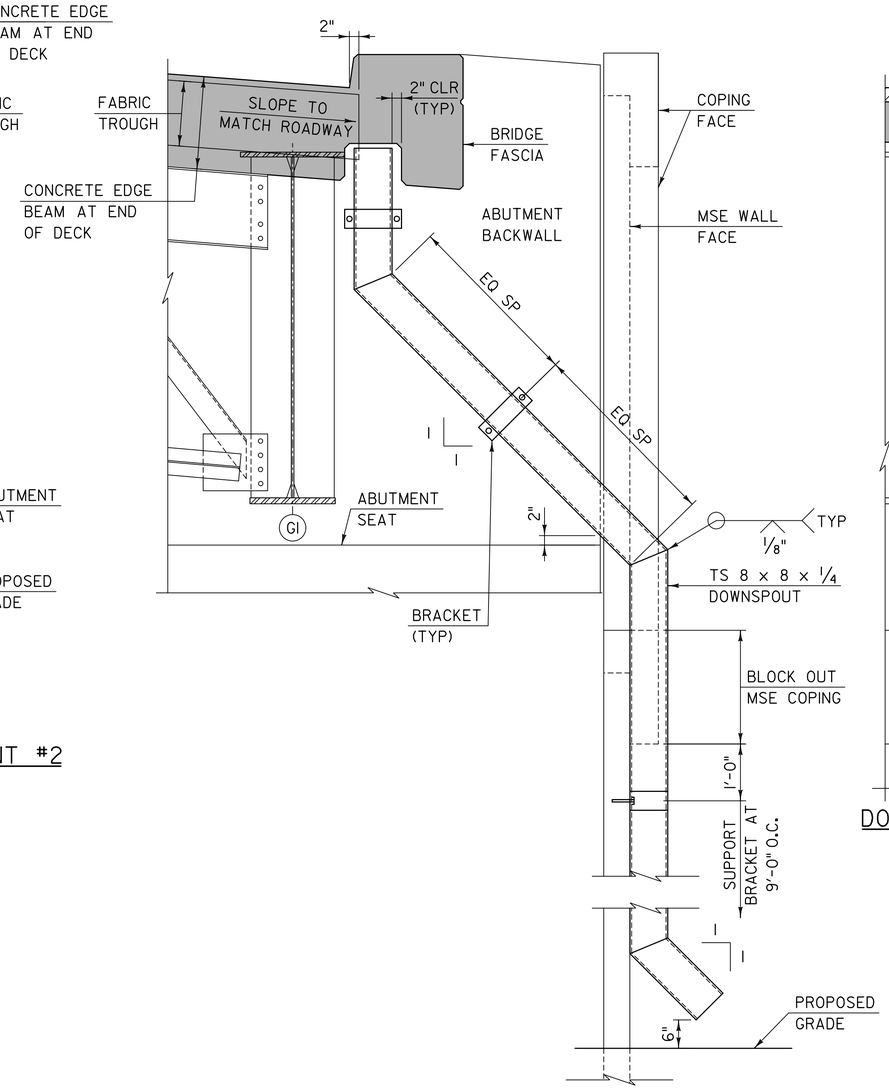

DOWNSPOUT ELEVATION AT ABUTMENT #1

SCALE: 3/4" = 1'- 0"
(LOOKING DOWN STATION)

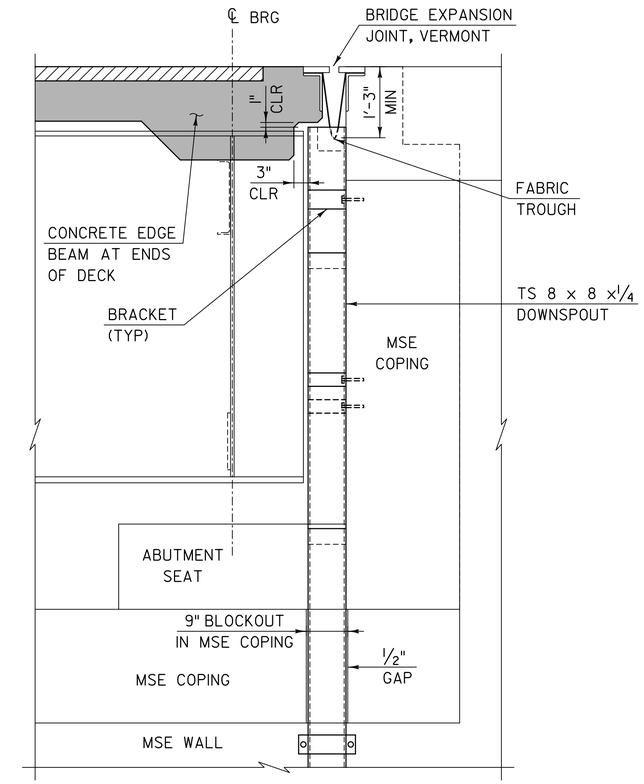

DOWNSPOUT SIDE ELEVATION AT ABUTMENT #1

SCALE: 3/4" = 1'- 0"

DECK BOXOUT NOTES

1. BOTTOM OF DECK TO BE BOXED OUT AT DOWNSPOUT LOCATION AS SHOWN TO ALLOW DOWNSPOUT TO COME IN TO CLOSE PROXIMITY WITH THE DRAIN TROUGH.
2. DECK GFRP REINFORCING BAR LAYOUT TO BE ADJUSTED AS REQUIRED TO MAINTAIN 2" CLEAR COVER.

DOWNSPOUT NOTES

1. HOLLOW STRUCTURAL STEEL TUBING SHALL CONFORM TO ASTM A500 OR A501.
2. ALL PLATES AND BARS SHALL CONFORM TO AASHTO M 270,GRADE 36.
3. DOWNSPOUT AND BRACKETS SHALL BE GALVANIZED IN ACCORDANCE WITH AASHTO M 111 AFTER FABRICATION.
4. ALL BOLTS AND RELATED HARDWARE SHALL BE ASTM A307 AND SHALL BE GALVANIZED IN ACCORDANCE WITH ASTM A153 (AASHTO M 232). ANCHORS FOR PIPE IN MSE WALL PANELS SHALL BE DETERMINED BY THE FABRICATOR AND SHOWN IN THE MSE WALL FABRICATION DRAWINGS.
5. ANY PLACE WHERE THE GALVANIZING HAS BEEN REMOVED FROM THE DOWNSPOUT EITHER BY CUTTING, BURNING, WELDING, PLACING, OR ANY OTHER MEANS, IT SHALL BE REPAIRED IN ACCORDANCE WITH SECTION 513.
6. STRUCTURAL STEEL TUBING, BARS, ANCHOR BOLTS, AND ANY OTHER HARDWARE NECESSARY TO INSTALL THE DOWNSPOT SHALL BE PAID FOR UNDER ITEM 506.56 "STRUCTURAL STEEL, CURVED PLATE GIRDER."

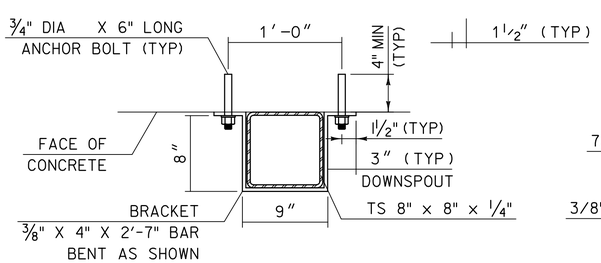

DETAILS FOR ATTACHING DOWNSPOUT TO ABUTMENT

SCALE: 1 1/2" = 1'- 0"

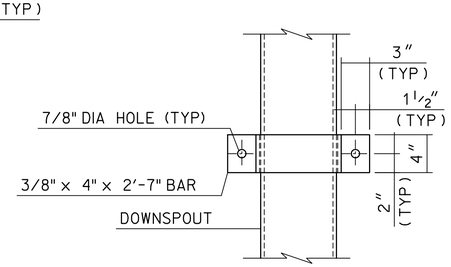

ELEVATION VIEW OF BRACKET

SCALE: 1 1/2" = 1'- 0"

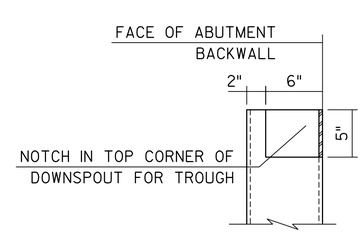

DOWNSPOUT CUTOUT FOR TROUGH

SCALE: 1 1/2" = 1'- 0"

PROJECT NAME: MIDDLESEX	
PROJECT NUMBER: IM 089-2(41)	
FILE NAME: z07a052bdrdsd.dgn	PLOT DATE: 1/3/2015
PROJECT LEADER: R. HEBERT	DRAWN BY: J. OLUND
DESIGNED BY: J. OLUND	CHECKED BY: T. POULIN
DOWNSPOUT DETAILS	SHEET 98 OF 154

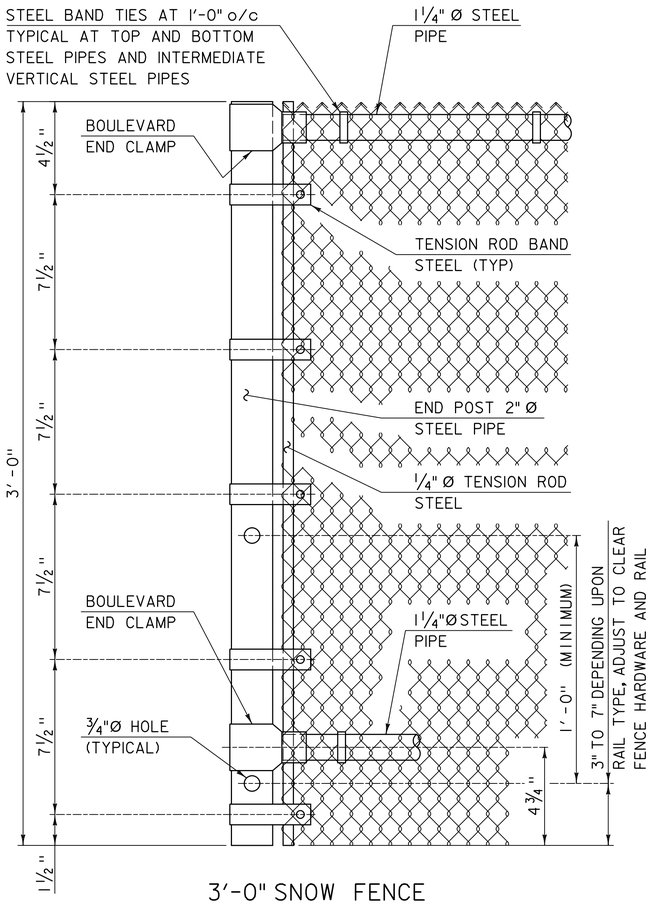

3'-0" SNOW FENCE
END POST DETAILS

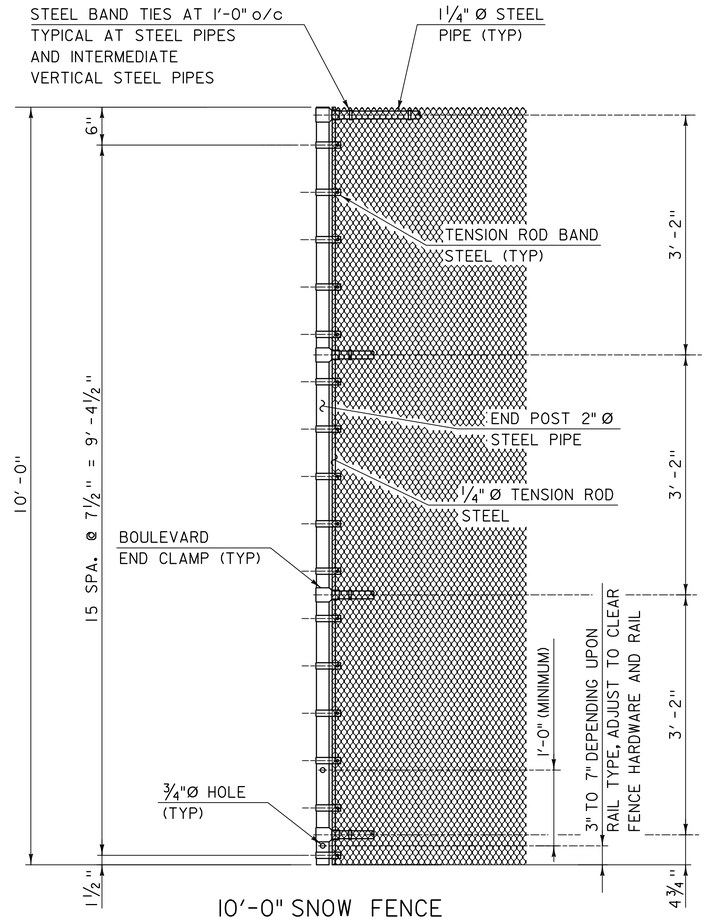

10'-0" SNOW FENCE
END POST DETAILS

NOTES

1. ALL WORK AND MATERIAL SHALL CONFORM TO SECTION 620.
2. 1 1/4" PIPE LENGTH SHALL BE FIELD CUT TO FIT POST SPACING.
3. CHAIN LINK FABRIC TO BE KNUCKLED TOP AND BOTTOM.
4. ALL STEEL PLATES SHALL CONFORM TO AASHTO M270/M270M GRADE 36.
5. ALL REFERENCES TO THE DIAMETERS OF GALVANIZED STEEL PIPE SHALL REFER TO THE OUTSIDE DIAMETER (O.D.).
6. HARDWARE FOR THE CONNECTION OF THE SNOW BARRIER SHALL BE HOT-DIP GALVANIZED OR MECHANICALLY GALVANIZED USING A MECHANICALLY DEPOSITED PROCESS CONFIRMING TO THE REQUIREMENTS OF AASHTO M 298, CLASS 10.

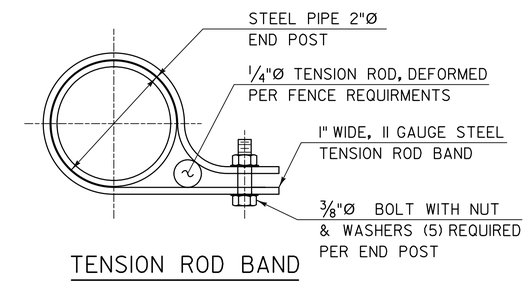

TENSION ROD BAND

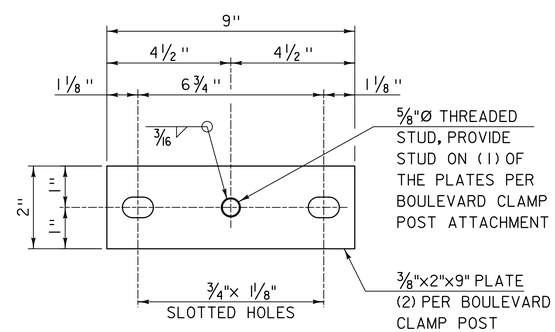

PLATE DETAIL

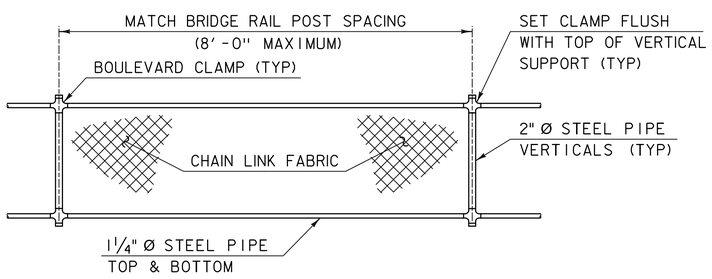

ELEVATION SNOW BARRIER
(3'-0" SNOW FENCE SHOWN,
10'-0" HIGH SNOW FENCE SIMILAR)

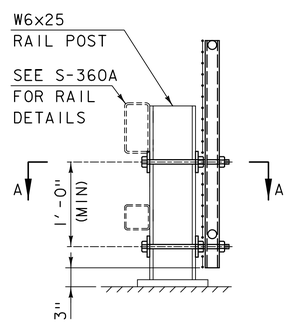

TYPICAL SECTION
(3'-0" SNOW FENCE SHOWN,
10'-0" HIGH SNOW FENCE SIMILAR)

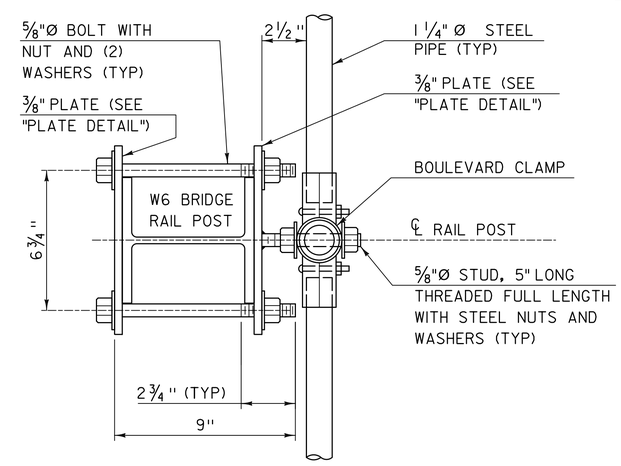

SECTION A-A

PROJECT NAME: MIDDLESEX	
PROJECT NUMBER: IM 089-2(41)	
FILE NAME: z07a052bdrsnowfen.dgn	PLOT DATE: 1/3/2015
PROJECT LEADER: R. HEBERT	DRAWN BY: VTRANS
DESIGNED BY: VTRANS	CHECKED BY: R. HEBERT
SNOW FENCE DETAILS	SHEET 99 OF 154

STATE OF VERMONT
AGENCY OF TRANSPORTATION

REINFORCING SCHEDULE 2

ITEM	EACH	SIZE	LENGTH	MARK	TYPE	A	B	C	D	E	F	G	H	J	K	R	O
SUPERSTRUCTURE																	
	312	5	57'- 11"	S501G	STR												
	416	5	49'- 3"	S502G	STR												
	416	5	51'- 5"	S503G	STR												
	336	5	51'- 0"	S504G	STR												
	1040	5	32'- 8"	S505G	STR												
	1040	5	39'- 9"	S506G	STR												
	32	5	8'- 2"	S507G	STR												
	1416	5	6'- 1"	S551G	S5	0'- 10"	1'- 4.5"	1'- 8"	1'- 4.5"			0'- 10"					
	2074	5	8'- 8"	S552G	1	0'- 7"	8'- 1"					0'- 0"		0'- 5"			
	78	5	6'- 5.5"	S553G	SJ	0'- 10"	1'- 1"	2'- 2"	1'- 6.5"			0'- 10"	1'- 1"				0'- 0"

~ NOTES ~

1. UNLESS OTHERWISE DESIGNATED, ALL BAR REINFORCEMENT FOR CONCRETE IN SIZES UP TO AND INCLUDING NO. 18 SHALL CONFORM TO THE REQUIREMENTS OF THE "SPECIFICATIONS FOR DEFORMED BILLET-STEEL BARS FOR CONCRETE REINFORCEMENT", AASHTO M 31 (ASTM A 615-SI). ALL BARS SHALL BE GRADE 60, UNLESS OTHERWISE DESIGNATED.
2. FOR TYPICAL BENDING DETAILS, RECOMMENDED PIN DIAMETER "D" OF BENDS AND HOOKS, AND OTHER STANDARD PRACTICE, SEE CURRENT CONCRETE REINFORCING STEEL INSTITUTE "MANUAL OF STANDARD PRACTICE".
3. BARS WHICH REQUIRE MORE ACCURATE BENDING THAN STANDARD PRACTICES SHOULD HAVE LIMITS INDICATED.
4. ALL DIMENSIONS ARE OUT TO OUT OF BAR EXCEPT "A" AND "G" ON STANDARD 180 DEGREE AND 135 DEGREE HOOKS.
5. "J" DIMENSION ON 180 DEGREE HOOKS TO BE SHOWN ONLY WHERE NECESSARY TO RESTRICT HOOK SIZE. OTHERWISE, STANDARD HOOKS ARE TO BE USED.
6. "H" DIMENSION ON STIRRUPS TO BE SHOWN ONLY WHEN NECESSARY TO MAINTAIN CLEARANCES.
7. WHERE SLOPE DIFFERS FROM 45 DEGREES, DIMENSIONS "H" AND "K" MUST BE SHOWN.
8. ▲ DENOTES BARS TO BE CUT IN FIELD.
9. ✳ DENOTES ONE EXTRA BAR ADDED FOR TESTING PURPOSES.
10. △ DENOTES TWO EXTRA BARS ADDED FOR TESTING PURPOSES.
11. E IN BAR MARK PREFIX DENOTES EPOXY COATED REINFORCING STEEL.
    G IN BAR MARK SUFFIX DENOTES GLASS FIBER REINFORCED PLASTIC (GFRP) BAR .

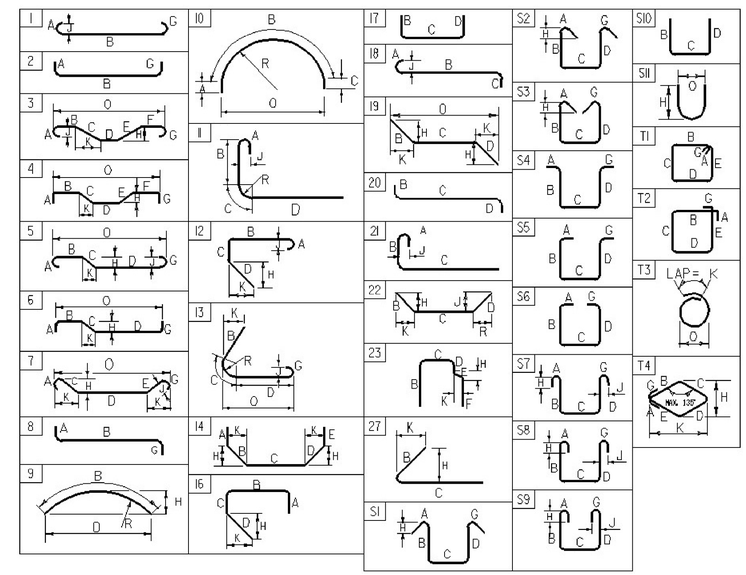

ASTM STANDARD REINFORCING BARS

BAR SIZE DESIGNATION	WEIGHT POUNDS PER FOOT	NOMINAL DIMENSIONS ROUND SECTION		
		DIAMETER INCHES	AREA INCHES ^{2}	PERIMETER INCHES
#3	0.376	0.375	0.11	1.178
#4	0.668	0.500	0.20	1.571
#5	1.043	0.625	0.31	1.963
#6	1.502	0.750	0.44	2.356
#7	2.044	0.875	0.60	2.749
#8	2.670	1.000	0.79	3.142
#9	3.400	1.128	1.00	3.544
#10	4.303	1.270	1.27	3.990
#11	5.313	1.410	1.56	4.430
#14	7.65	1.693	2.25	5.32
#18	13.60	2.257	4.00	7.09

PROJECT NAME: **MIDDLESEX**
PROJECT NUMBER: **IM 089-2(41)**

FILE NAME: **Z07A052rss.xls**
PROJECT MANAGER: **R. HEBERT**
DESIGNED BY: **T. POULIN**
REINFORCING SCHEDULE 2

PLOT DATE: **4/4/2014**
DRAWN BY: **S. KELLER**
CHECKED BY: **J. OLUND**
SHEET **101** OF **154**

STATE OF VERMONT
AGENCY OF TRANSPORTATION

REINFORCING SCHEDULE 2

ITEM	EACH	SIZE	LENGTH	MARK	TYPE	A	B	C	D	E	F	G	H	J	K	R	O
SUPERSTRUCTURE																	
	312	5	57'- 11"	S501G	STR												
	416	5	49'- 3"	S502G	STR												
	416	5	51'- 5"	S503G	STR												
	336	5	51'- 0"	S504G	STR												
	1040	5	32'- 8"	S505G	STR												
	1040	5	39'- 9"	S506G	STR												
	32	5	8'- 2"	S507G	STR												
	1416	5	6'- 1"	S551G	S5	0'- 10"	1'- 4.5"	1'- 8"	1'- 4.5"			0'- 10"					
	2074	5	8'- 8"	S552G	1	0'- 7"	8'- 1"					0'- 0"		0'- 5"			
	78	5	6'- 5.5"	S553G	SJ	0'- 10"	1'- 1"	2'- 2"	1'- 6.5"			0'- 10"	1'- 1"				0'- 0"

~ NOTES ~

1. UNLESS OTHERWISE DESIGNATED, ALL BAR REINFORCEMENT FOR CONCRETE IN SIZES UP TO AND INCLUDING NO. 18 SHALL CONFORM TO THE REQUIREMENTS OF THE "SPECIFICATIONS FOR DEFORMED BILLET-STEEL BARS FOR CONCRETE REINFORCEMENT", AASHTO M 31 (ASTM A 615-SI). ALL BARS SHALL BE GRADE 60, UNLESS OTHERWISE DESIGNATED.
2. FOR TYPICAL BENDING DETAILS, RECOMMENDED PIN DIAMETER "D" OF BENDS AND HOOKS, AND OTHER STANDARD PRACTICE, SEE CURRENT CONCRETE REINFORCING STEEL INSTITUTE "MANUAL OF STANDARD PRACTICE".
3. BARS WHICH REQUIRE MORE ACCURATE BENDING THAN STANDARD PRACTICES SHOULD HAVE LIMITS INDICATED.
4. ALL DIMENSIONS ARE OUT TO OUT OF BAR EXCEPT "A" AND "G" ON STANDARD 180 DEGREE AND 135 DEGREE HOOKS.
5. "J" DIMENSION ON 180 DEGREE HOOKS TO BE SHOWN ONLY WHERE NECESSARY TO RESTRICT HOOK SIZE. OTHERWISE, STANDARD HOOKS ARE TO BE USED.
6. "H" DIMENSION ON STIRRUPS TO BE SHOWN ONLY WHEN NECESSARY TO MAINTAIN CLEARANCES.
7. WHERE SLOPE DIFFERS FROM 45 DEGREES, DIMENSIONS "H" AND "K" MUST BE SHOWN.
8. ▲ DENOTES BARS TO BE CUT IN FIELD.
9. ✳ DENOTES ONE EXTRA BAR ADDED FOR TESTING PURPOSES.
10. △ DENOTES TWO EXTRA BARS ADDED FOR TESTING PURPOSES.
11. E IN BAR MARK PREFIX DENOTES EPOXY COATED REINFORCING STEEL.
    G IN BAR MARK SUFFIX DENOTES GLASS FIBER REINFORCED PLASTIC (GFRP) BAR .

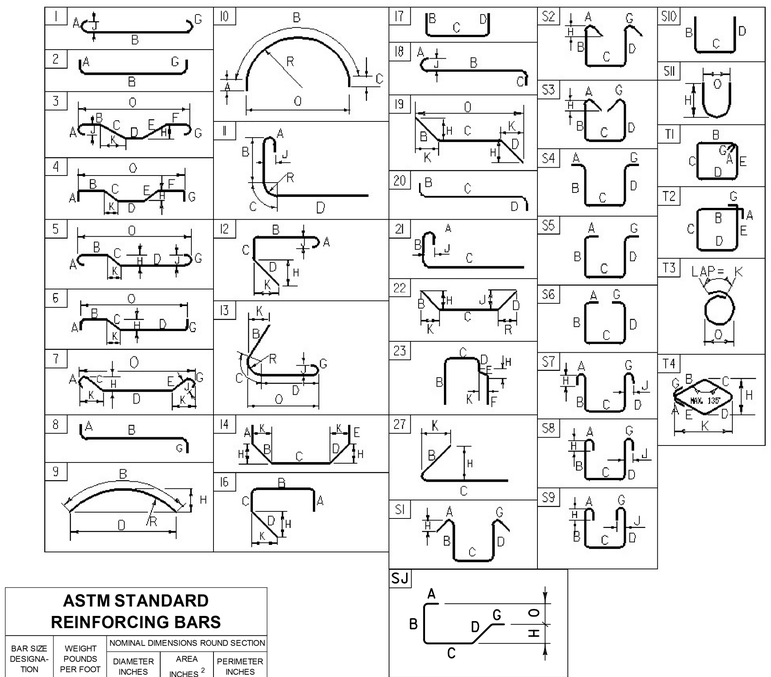

ASTM STANDARD REINFORCING BARS

BAR SIZE DESIGNATION	WEIGHT POUNDS PER FOOT	NOMINAL DIMENSIONS ROUND SECTION		
		DIAMETER INCHES	AREA INCHES ^{2}	PERIMETER INCHES
#3	0.376	0.375	0.11	1.178
#4	0.668	0.500	0.20	1.571
#5	1.043	0.625	0.31	1.963
#6	1.502	0.750	0.44	2.356
#7	2.044	0.875	0.60	2.749
#8	2.670	1.000	0.79	3.142
#9	3.400	1.128	1.00	3.544
#10	4.303	1.270	1.27	3.990
#11	5.313	1.410	1.56	4.430
#14	7.65	1.693	2.25	5.32
#18	13.60	2.257	4.00	7.09

PROJECT NAME: **MIDDLESEX**
PROJECT NUMBER: **IM 089-2(41)**

FILE NAME: **Z07A052rss.xls**
PROJECT MANAGER: **R. HEBERT**
DESIGNED BY: **T. POULIN**
REINFORCING SCHEDULE 2

PLOT DATE: **4/4/2014**
DRAWN BY: **S. KELLER**
CHECKED BY: **J. OLUND**
SHEET **101** OF **154**

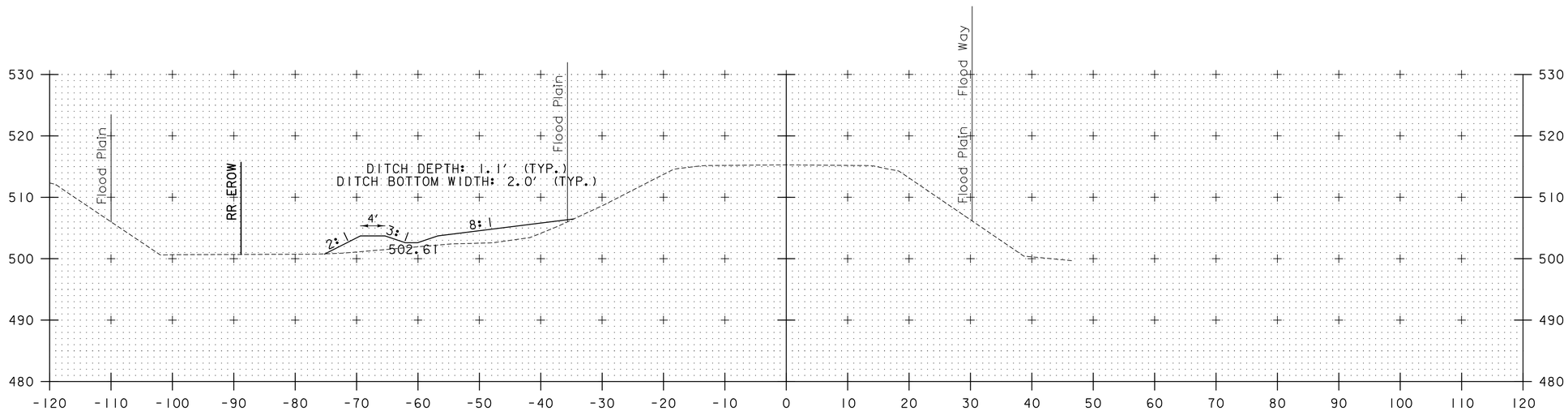

7+00

STA 6+75, 60' LT
BEGIN GRASS CHANNEL
EL. 502.23

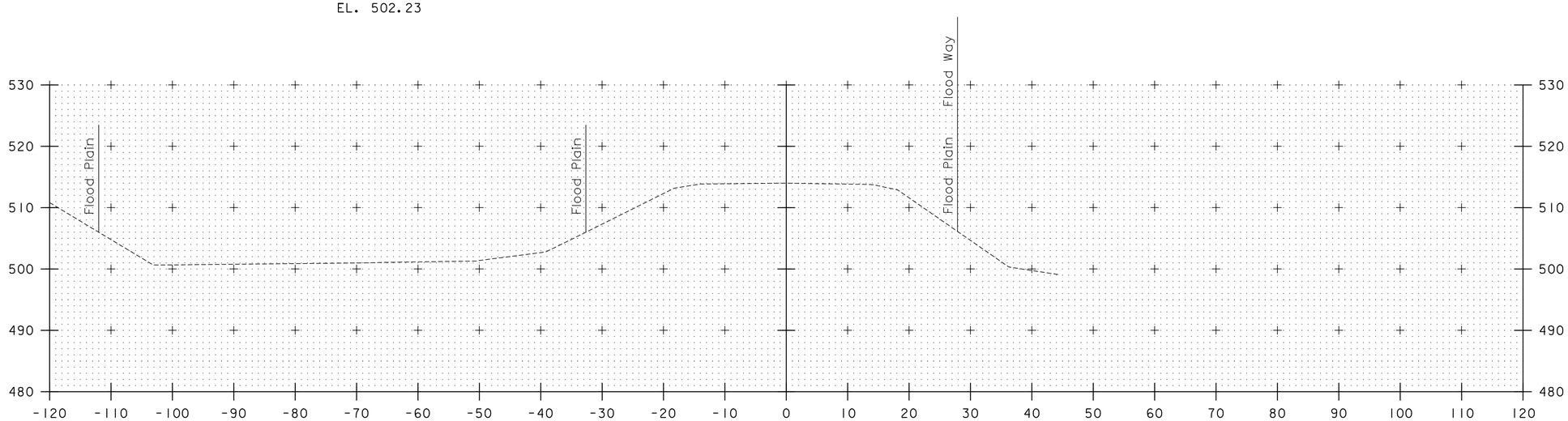

6+50

PROJECT NAME: MIDDLESEX	
PROJECT NUMBER: IM 089-2(41)	
FILE NAME: z07a052xs.dgn	PLOT DATE: 1/3/2015
PROJECT LEADER: R. HEBERT	DRAWN BY: J. DAVIS
DESIGNED BY: D. BURHANS	CHECKED BY: D. BRYANT
ROADWAY CROSS SECTIONS - 1	SHEET 102 OF 154

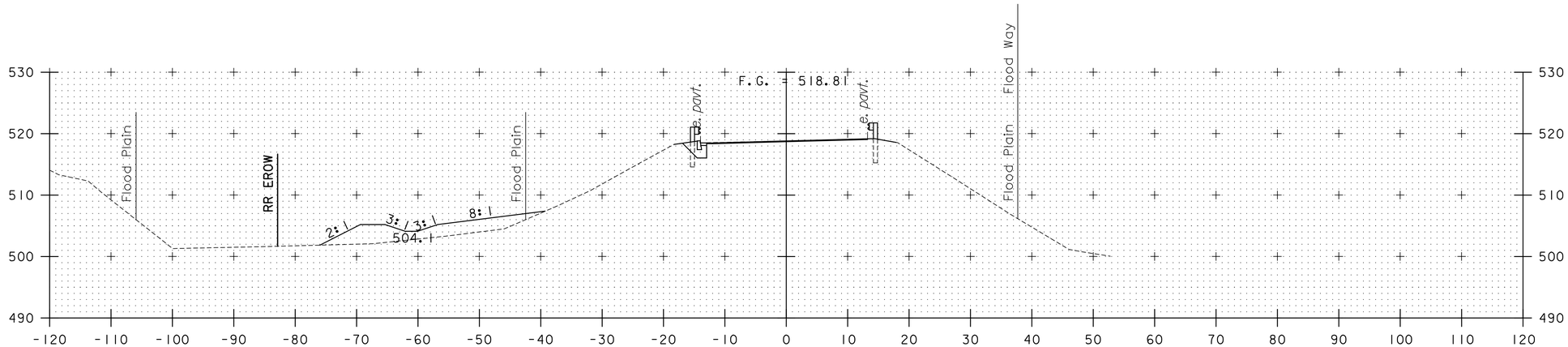

8+00

U.S. ROUTE 2
STA 8+00.00
MATCH EXISTING
PAVEMENT
BEGIN APPROACH

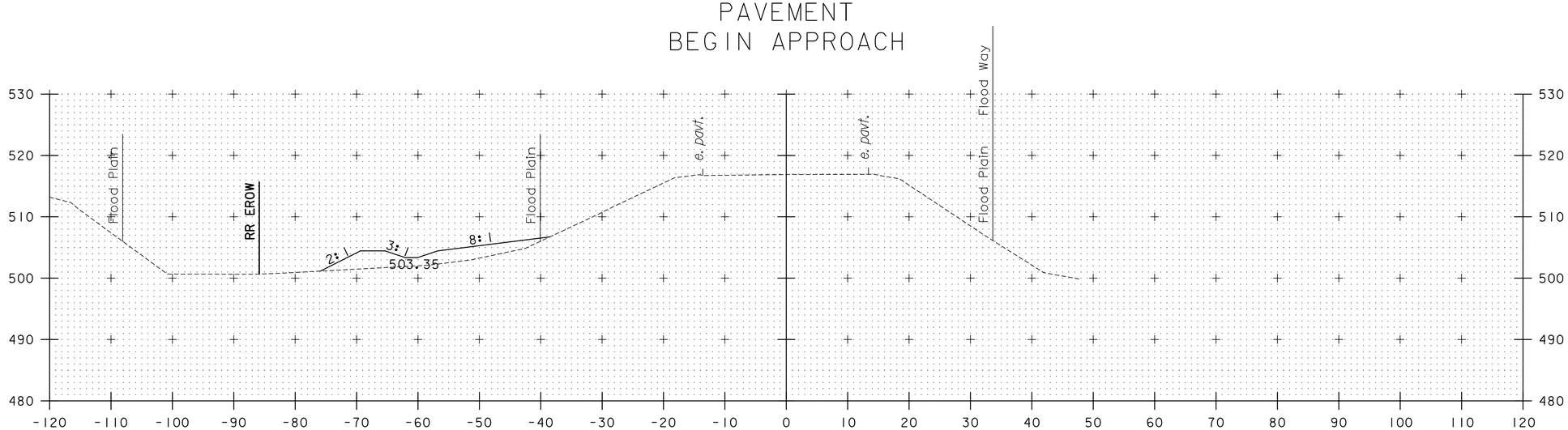

7+50

PROJECT NAME:	MIDDLESEX
PROJECT NUMBER:	IM 089-2(41)

FILE NAME: z07a052xs.dgn	PLOT DATE: 1/3/2015
PROJECT LEADER: R. HEBERT	DRAWN BY: J. DAVIS
DESIGNED BY: D. BURHANS	CHECKED BY: D. BRYANT
ROADWAY CROSS SECTIONS - 2	SHEET 103 OF 154

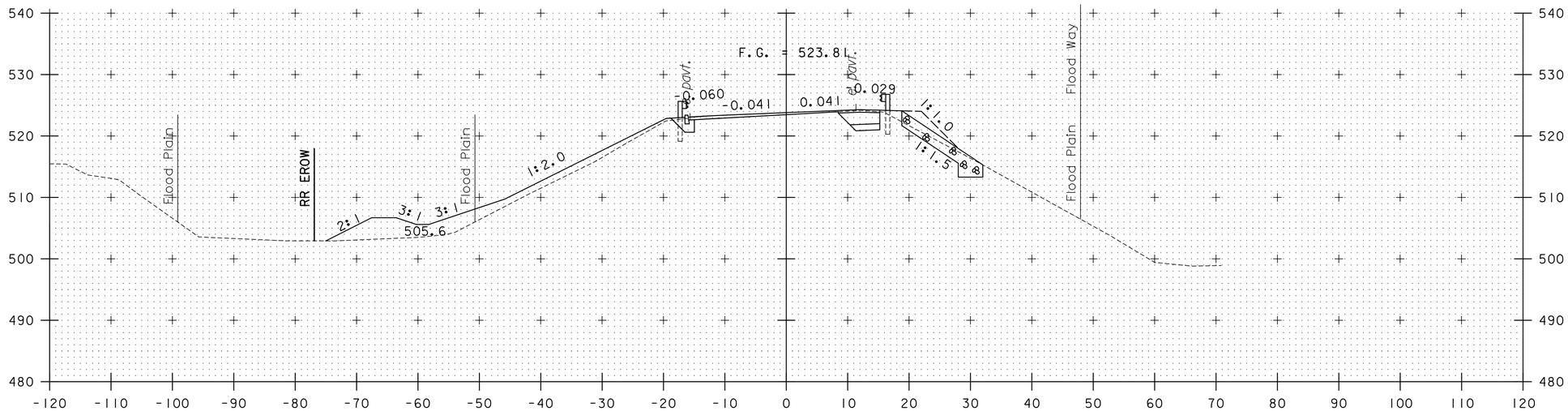

9+00

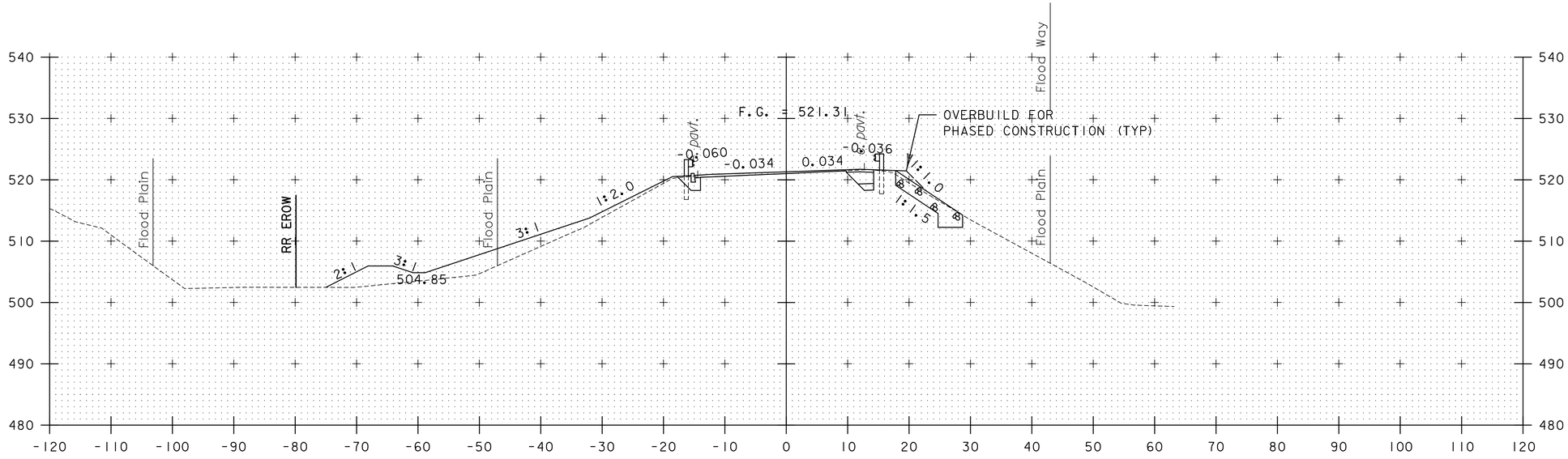

8+50

PROJECT NAME: MIDDLESEX	
PROJECT NUMBER: IM 089-2(41)	
FILE NAME: z07a052xs.dgn	PLOT DATE: 1/3/2015
PROJECT LEADER: R. HEBERT	DRAWN BY: J. DAVIS
DESIGNED BY: D. BURHANS	CHECKED BY: D. BRYANT
ROADWAY CROSS SECTIONS - 3	SHEET 104 OF 154

U.S. ROUTE 2
STA 10+00.00
END APPROACH
BEGIN PROJECT
IM 089-2 (41)

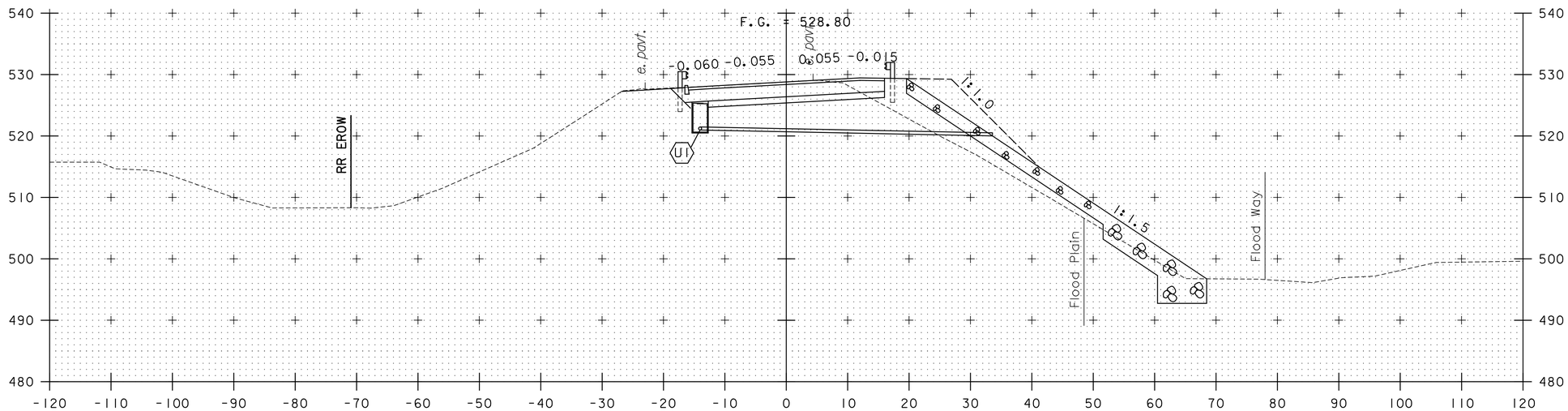

STA 9+75, 64' LT
END GRASS CHANNEL
EL. 506.73

10+00

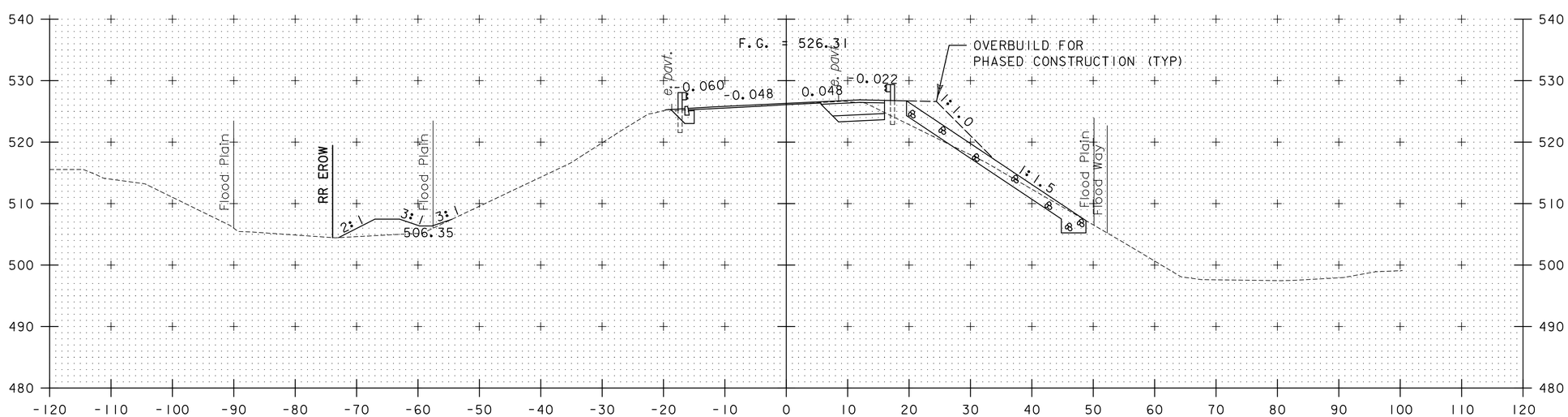

9+50

PROJECT NAME: MIDDLESEX	
PROJECT NUMBER: IM 089-2(41)	
FILE NAME: z07d052xs.dgn	PLOT DATE: 1/3/2015
PROJECT LEADER: R. HEBERT	DRAWN BY: J. DAVIS
DESIGNED BY: D. BURHANS	CHECKED BY: D. BRYANT
ROADWAY CROSS SECTIONS - 4	SHEET 105 OF 154

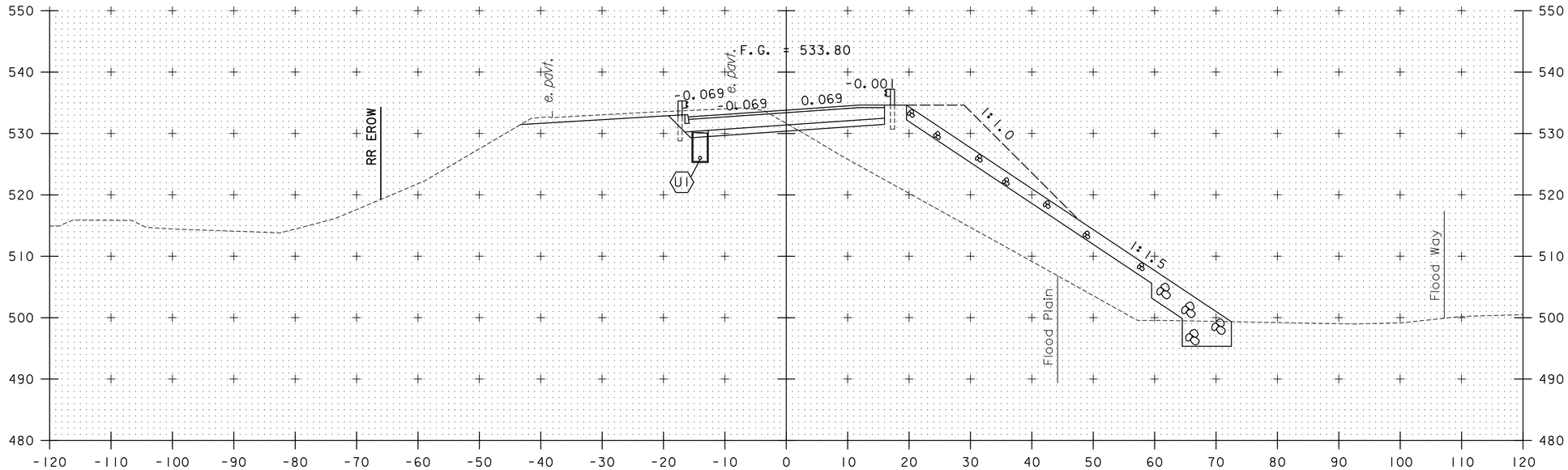

11+00

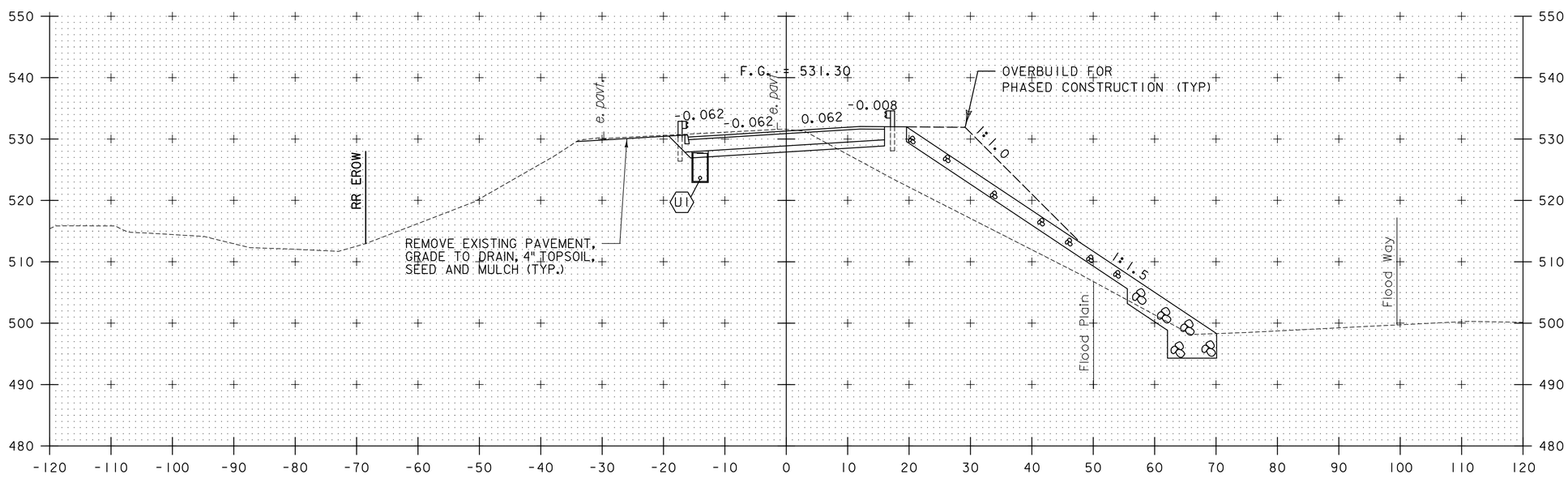

10+50

PROJECT NAME:	MIDDLESEX
PROJECT NUMBER:	IM 089-2(41)

FILE NAME: z07a052xs.dgn	PLOT DATE: 1/3/2015
PROJECT LEADER: R. HEBERT	DRAWN BY: J. DAVIS
DESIGNED BY: D. BURHANS	CHECKED BY: D. BRYANT
ROADWAY CROSS SECTIONS - 5	SHEET 106 OF 154

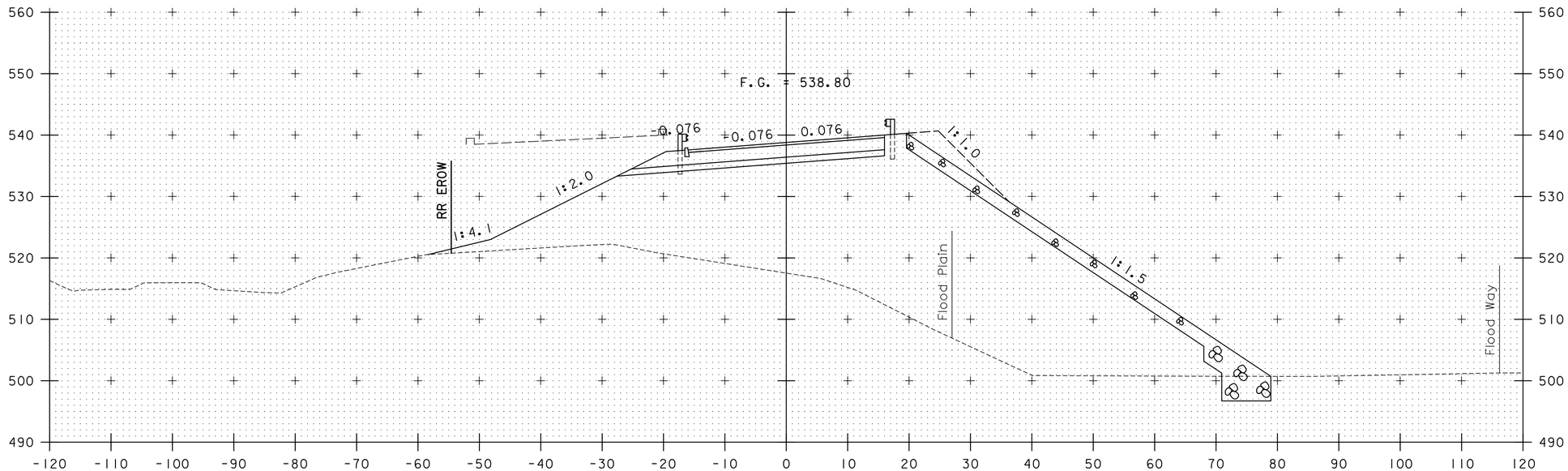

12+00

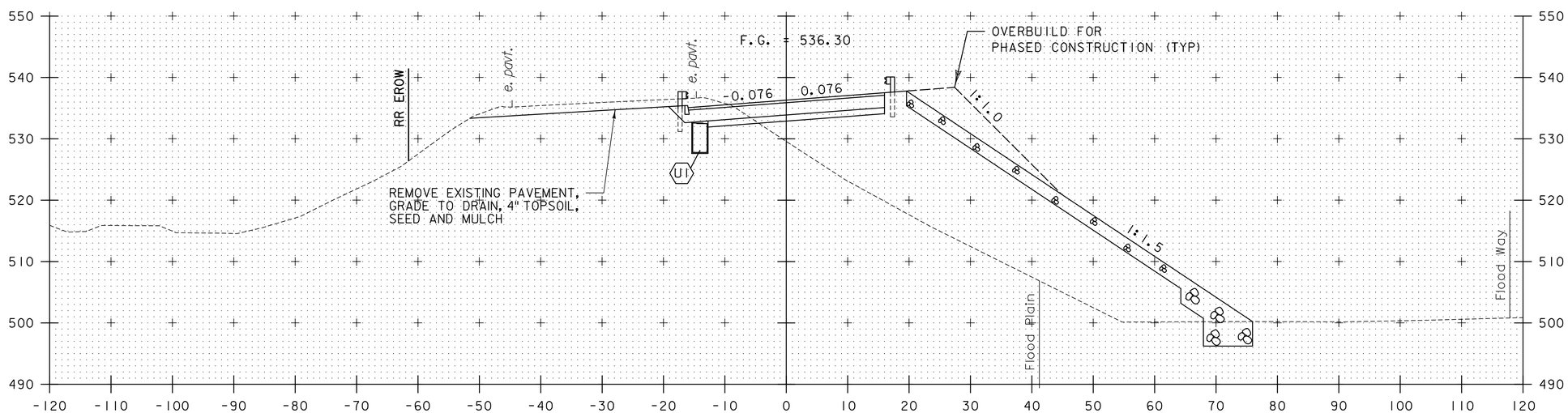

11+50

PROJECT NAME: MIDDLESEX	
PROJECT NUMBER: IM 089-2(41)	
FILE NAME: z07a052xs.dgn	PLOT DATE: 1/3/2015
PROJECT LEADER: R. HEBERT	DRAWN BY: J. DAVIS
DESIGNED BY: D. BURHANS	CHECKED BY: D. BRYANT
ROADWAY CROSS SECTIONS - 6	SHEET 107 OF 154

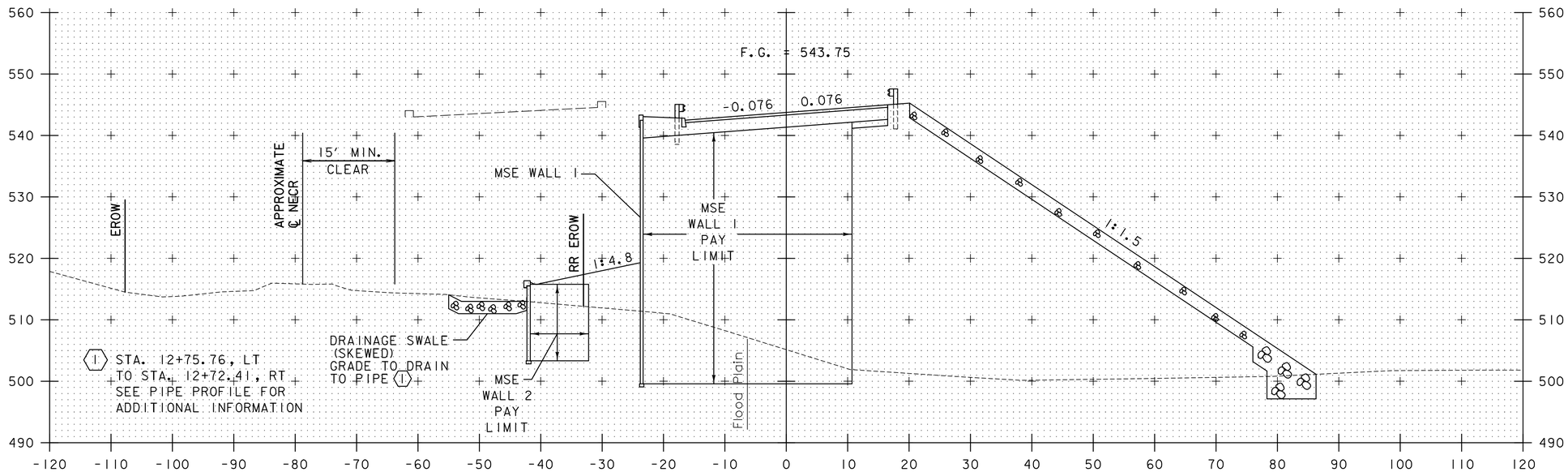

13+00

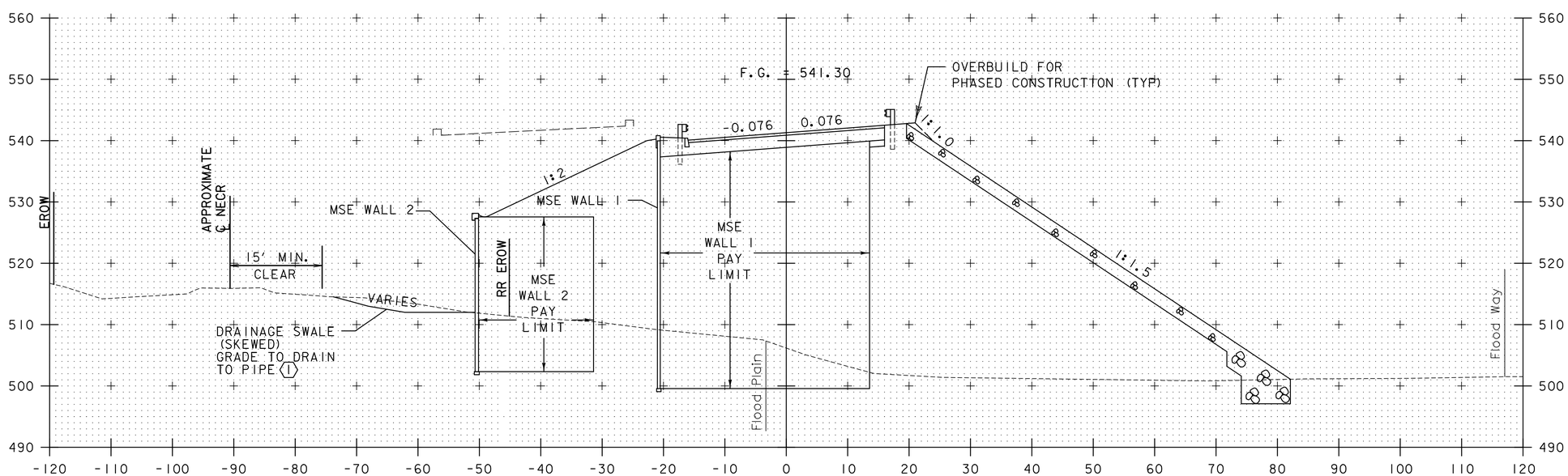

12+50

PROJECT NAME: MIDDLESEX	
PROJECT NUMBER: IM 089-2(41)	
FILE NAME: z07a052xs.dgn	PLOT DATE: 1/3/2015
PROJECT LEADER: R. HEBERT	DRAWN BY: J. DAVIS
DESIGNED BY: D. BURHANS	CHECKED BY: D. BRYANT
ROADWAY CROSS SECTIONS - 7	SHEET 108 OF 154

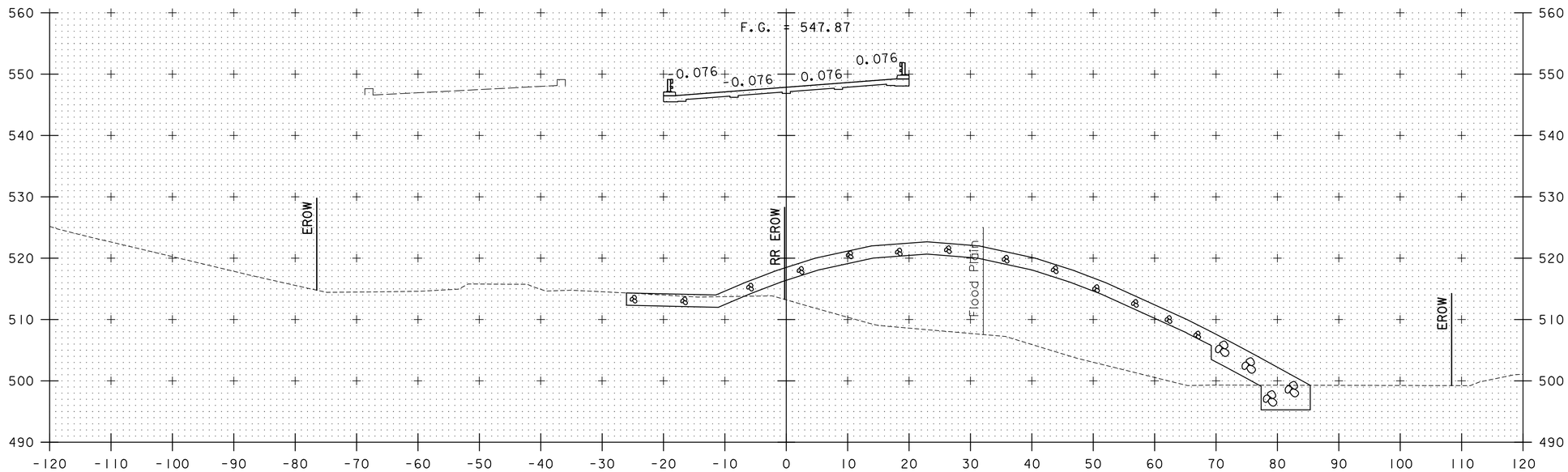

14+00
STA 13+82.75
BEGIN BRIDGE

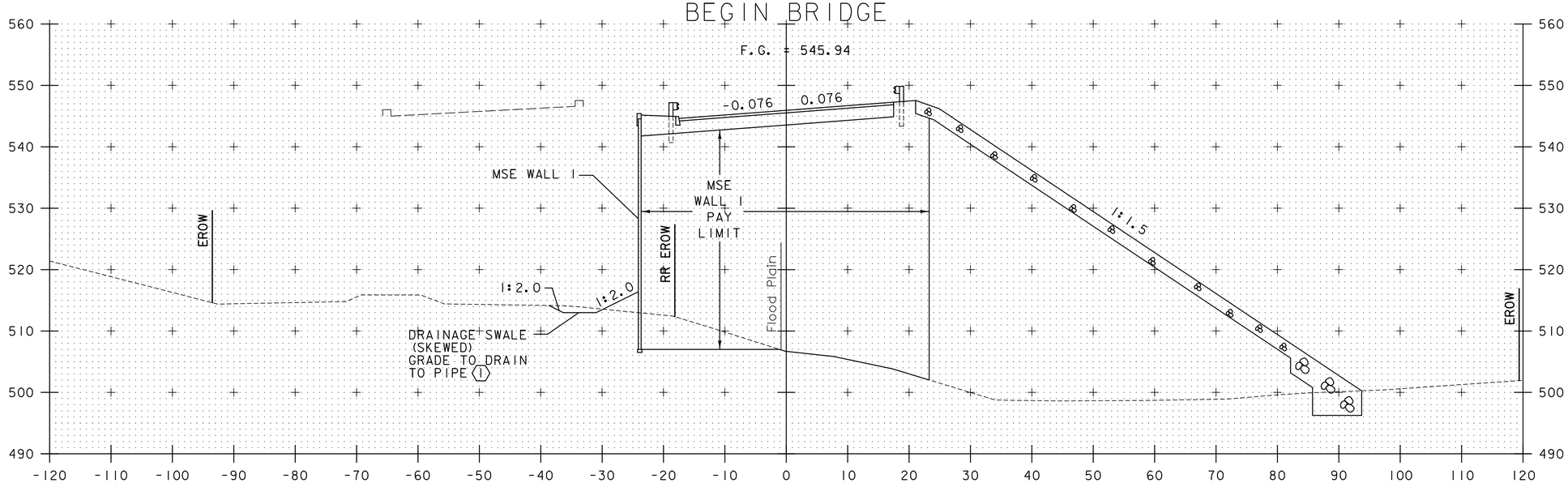

13+50

PROJECT NAME: MIDDLESEX	
PROJECT NUMBER: IM 089-2(41)	
FILE NAME: z07a052xs.dgn	PLOT DATE: 1/3/2015
PROJECT LEADER: R. HEBERT	DRAWN BY: J. DAVIS
DESIGNED BY: D. BURHANS	CHECKED BY: D. BRYANT
ROADWAY CROSS SECTIONS - 8	SHEET 109 OF 154

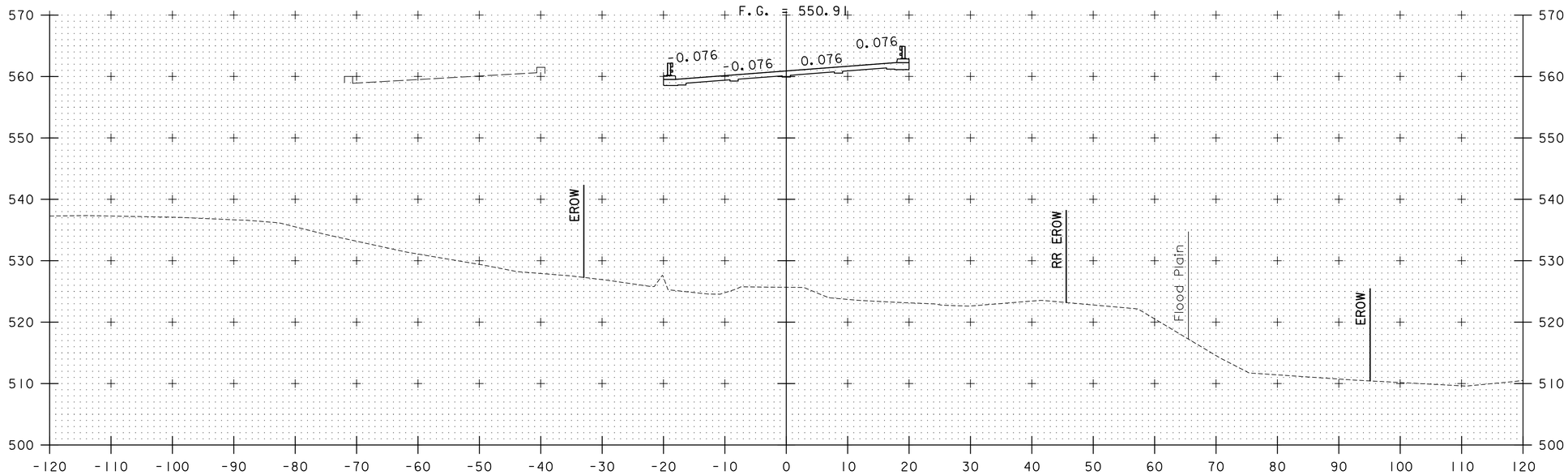

15+00

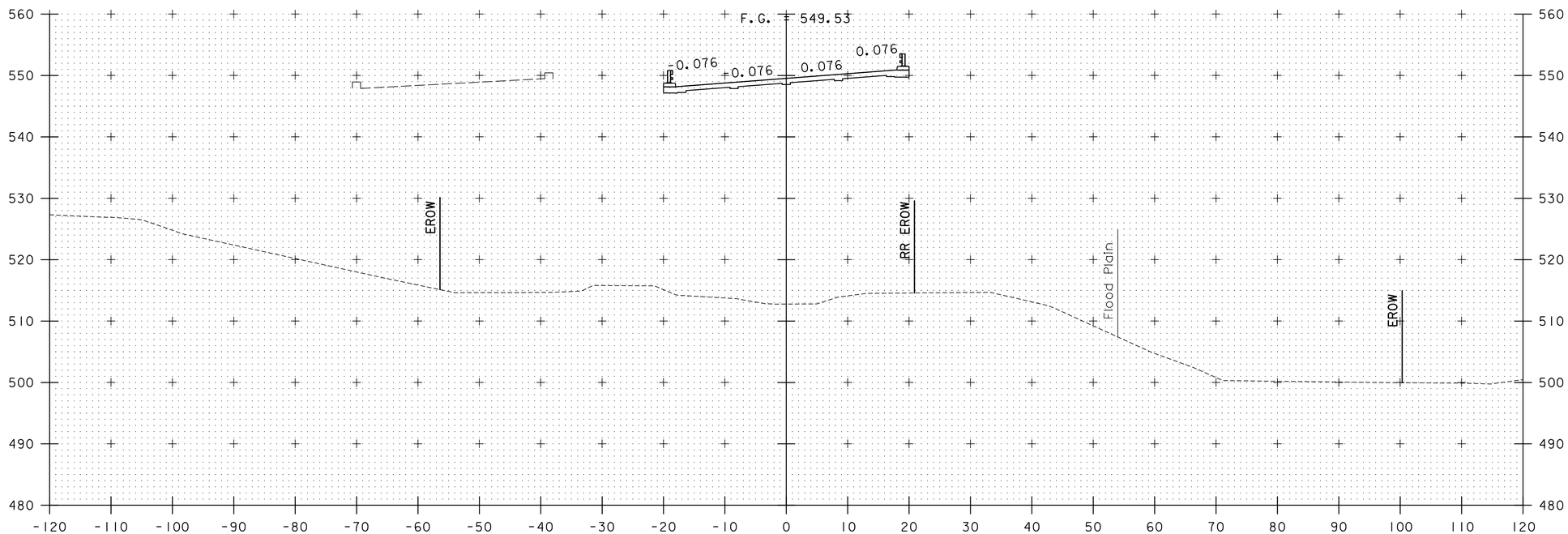

14+50

PROJECT NAME: MIDDLESEX	
PROJECT NUMBER: IM 089-2(41)	
FILE NAME: z07a052xs.dgn	PLOT DATE: 1/3/2015
PROJECT LEADER: R. HEBERT	DRAWN BY: J. DAVIS
DESIGNED BY: D. BURHANS	CHECKED BY: D. BRYANT
ROADWAY CROSS SECTIONS - 9	SHEET 110 OF 154

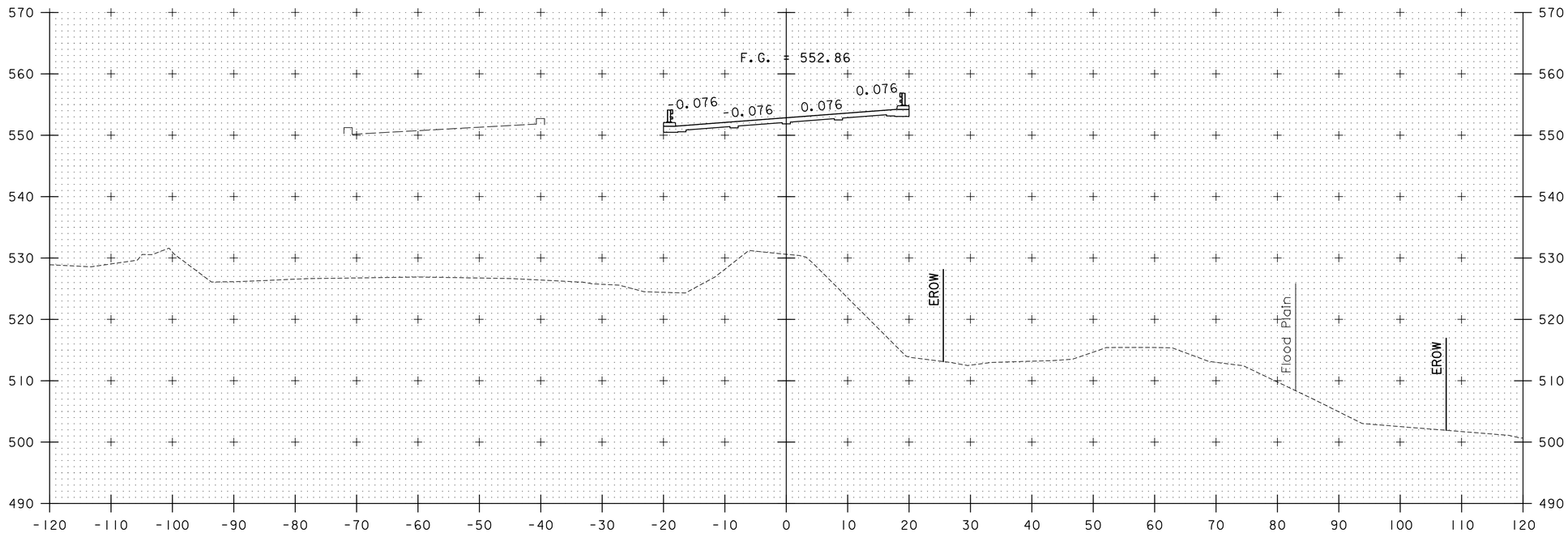

16+00

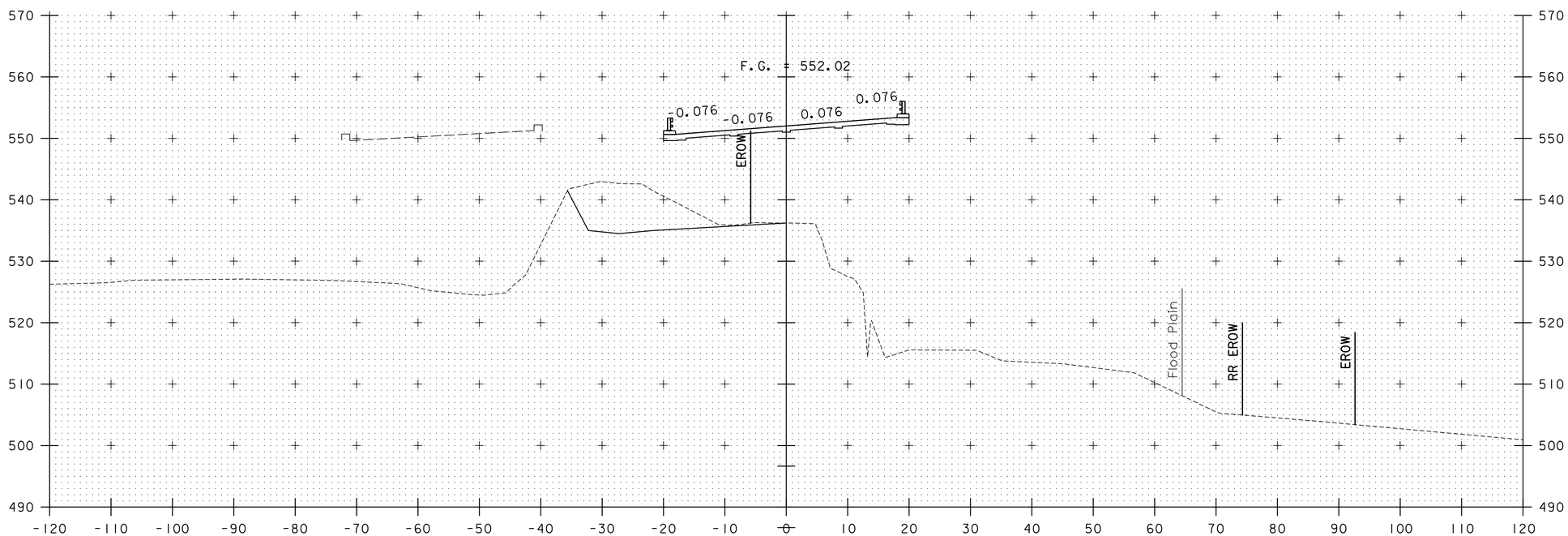

15+50

PROJECT NAME: MIDDLESEX	
PROJECT NUMBER: IM 089-2(41)	
FILE NAME: z07a052xs.dgn	PLOT DATE: 1/3/2015
PROJECT LEADER: R. HEBERT	DRAWN BY: J. DAVIS
DESIGNED BY: D. BURHANS	CHECKED BY: D. BRYANT
ROADWAY CROSS SECTIONS - 10	SHEET 111 OF 154

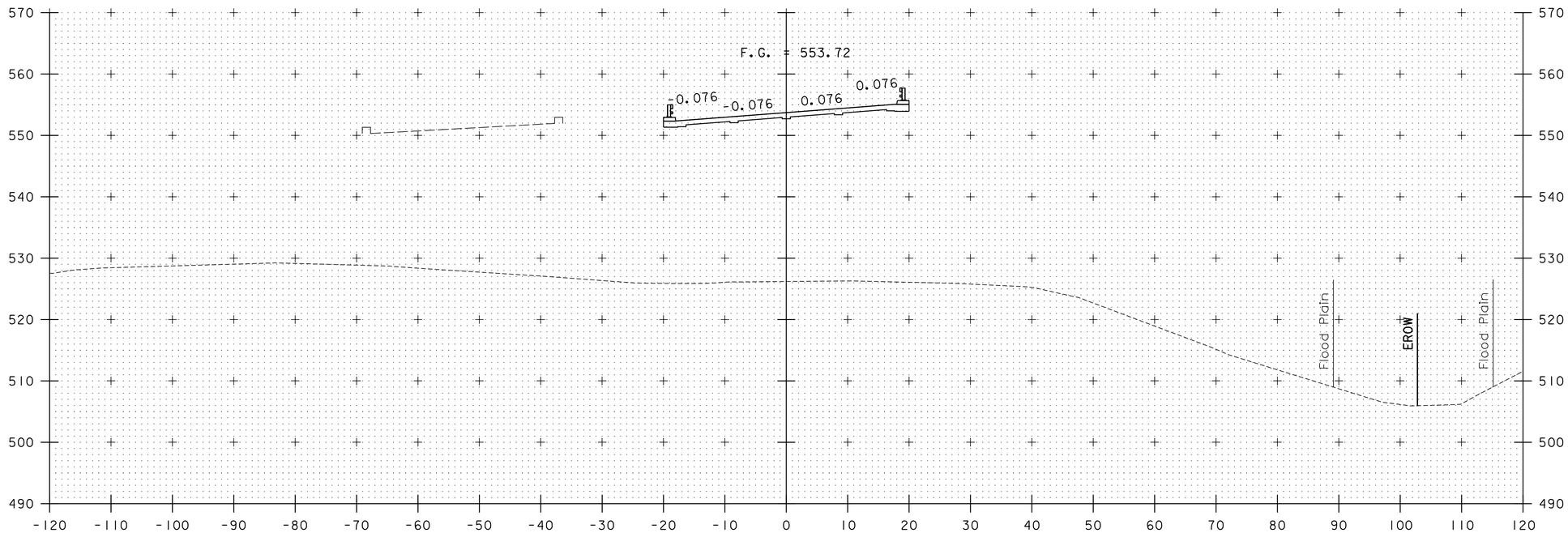

17+00

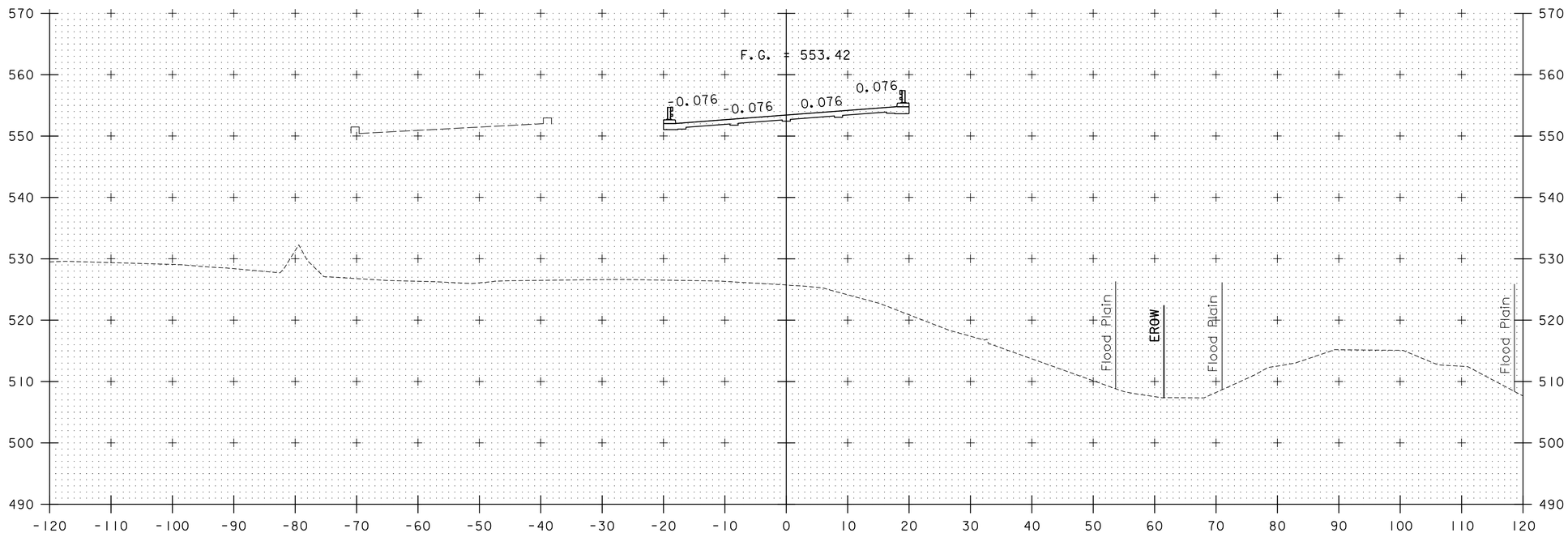

16+50

PROJECT NAME: MIDDLESEX	
PROJECT NUMBER: IM 089-2(41)	
FILE NAME: z07d052xs.dgn	PLOT DATE: 1/3/2015
PROJECT LEADER: R. HEBERT	DRAWN BY: J. DAVIS
DESIGNED BY: D. BURHANS	CHECKED BY: D. BRYANT
ROADWAY CROSS SECTIONS - 11	SHEET 112 OF 154

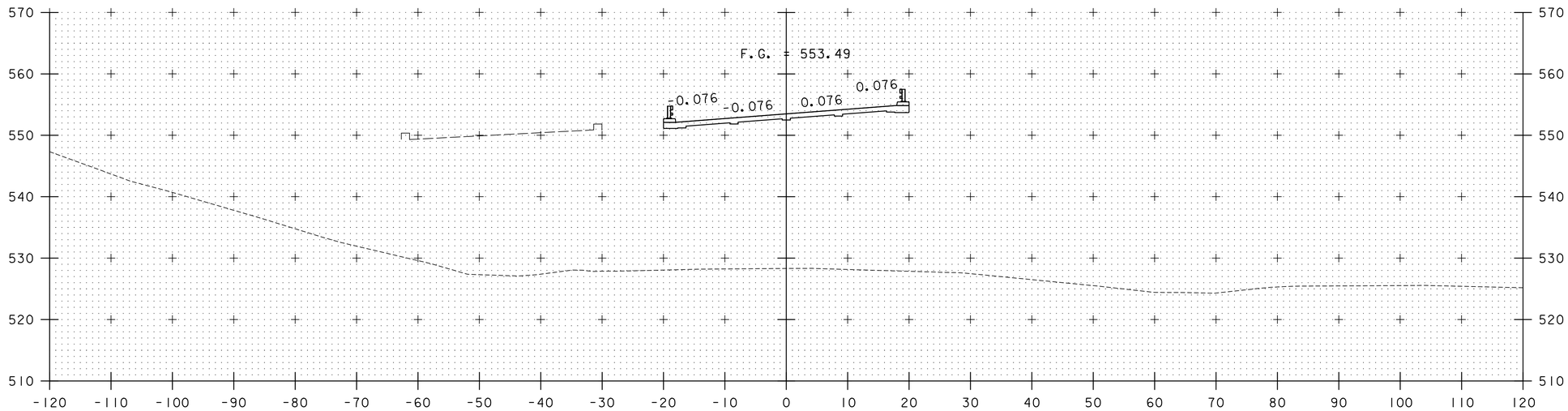

18+00

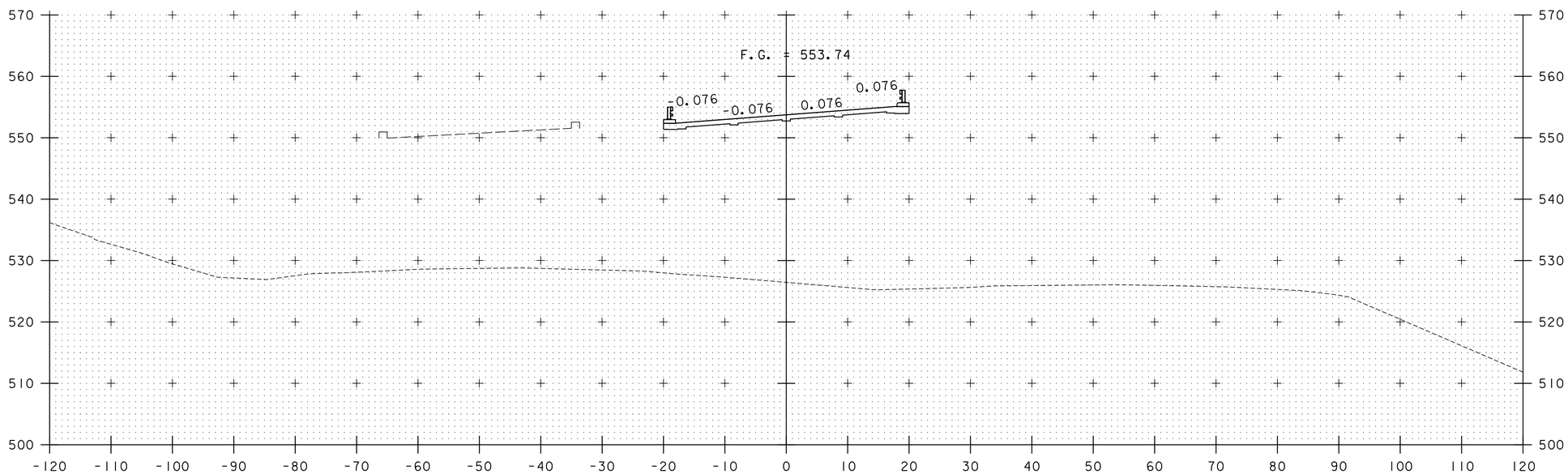

17+50

PROJECT NAME: MIDDLESEX	
PROJECT NUMBER: IM 089-2(41)	
FILE NAME: z07a052xs.dgn	PLOT DATE: 1/3/2015
PROJECT LEADER: R. HEBERT	DRAWN BY: J. DAVIS
DESIGNED BY: D. BURHANS	CHECKED BY: D. BRYANT
ROADWAY CROSS SECTIONS - 12	SHEET 113 OF 154

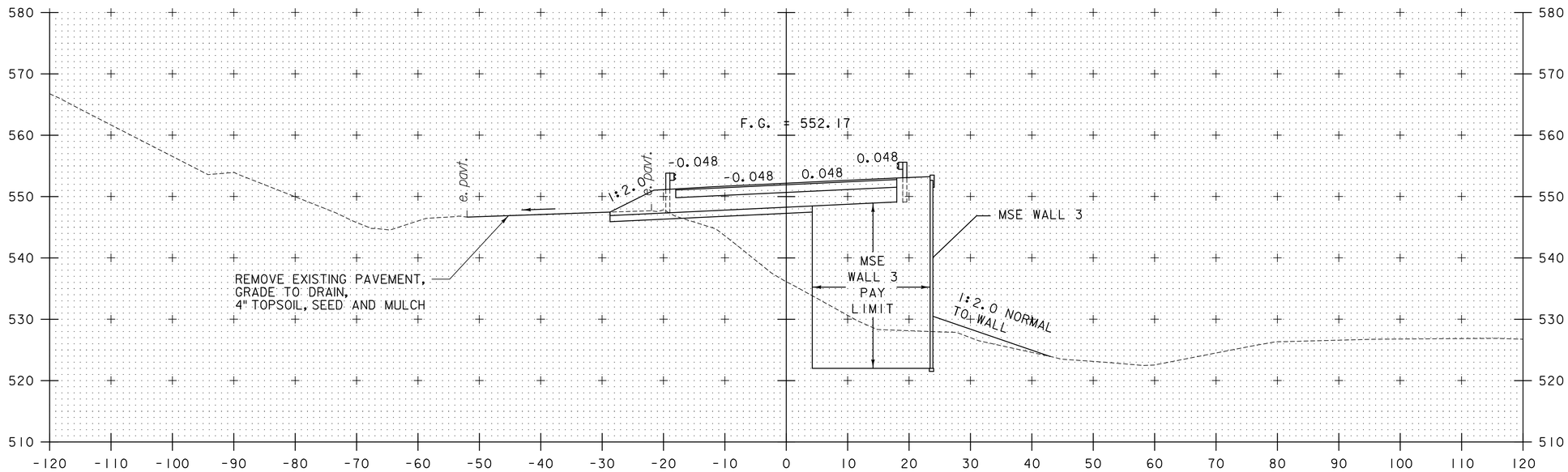

19+00

STA 18+95.25
END BRIDGE

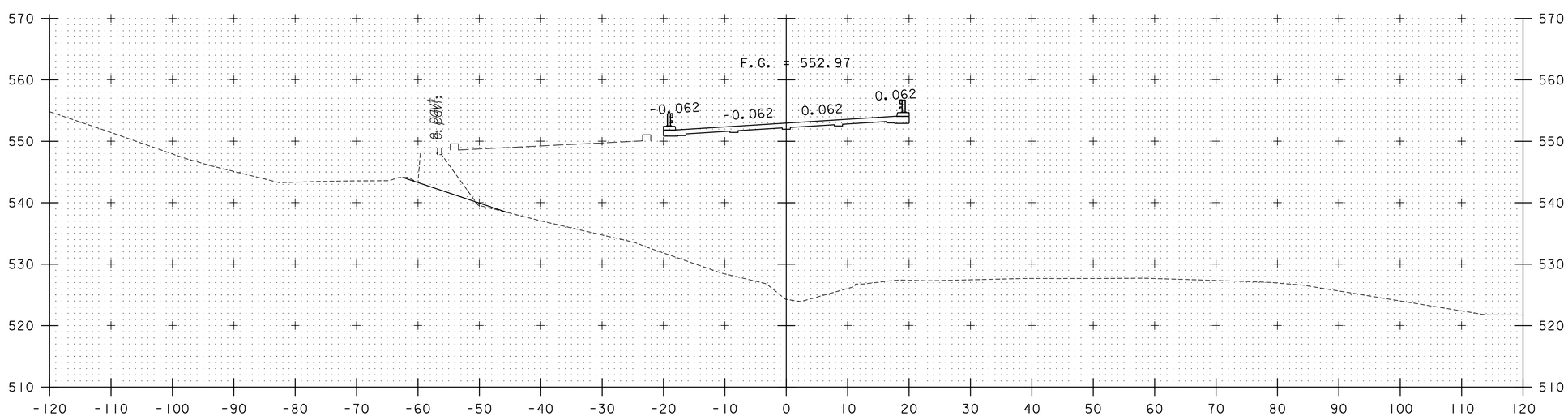

18+50

PROJECT NAME: MIDDLESEX	
PROJECT NUMBER: IM 089-2(41)	
FILE NAME: z07a052xs.dgn	PLOT DATE: 1/3/2015
PROJECT LEADER: R. HEBERT	DRAWN BY: J. DAVIS
DESIGNED BY: D. BURHANS	CHECKED BY: D. BRYANT
ROADWAY CROSS SECTIONS - 13	SHEET 114 OF 154

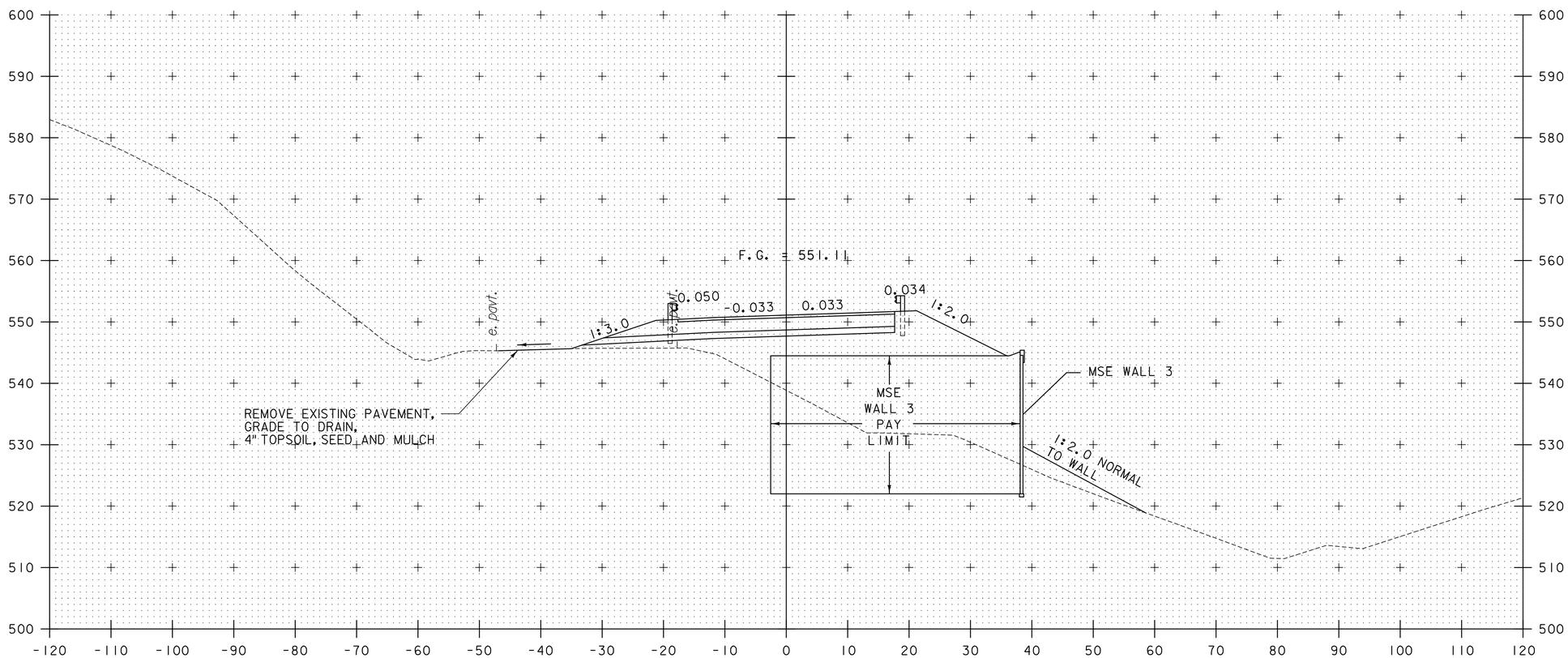

19+50

PROJECT NAME: MIDDLESEX	
PROJECT NUMBER: IM 089-2(41)	
FILE NAME: z07d052xs.dgn	PLOT DATE: 1/3/2015
PROJECT LEADER: R. HEBERT	DRAWN BY: J. DAVIS
DESIGNED BY: D. BURHANS	CHECKED BY: D. BRYANT
ROADWAY CROSS SECTIONS - 14	SHEET 115 OF 154

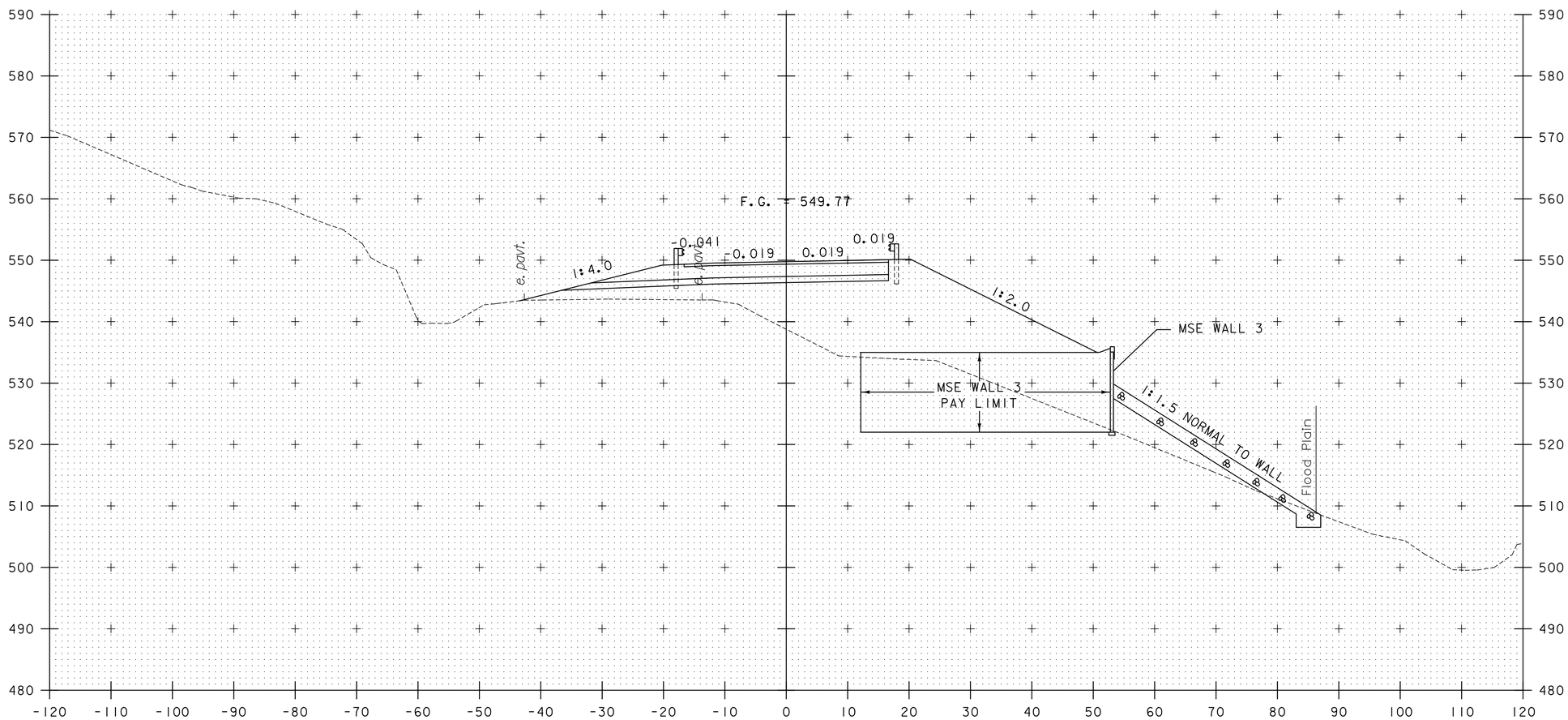

20+00

PROJECT NAME:	MIDDLESEX
PROJECT NUMBER:	IM 089-2(41)

FILE NAME: z07a052xs.dgn	PLOT DATE: 1/3/2015
PROJECT LEADER: R. HEBERT	DRAWN BY: J. DAVIS
DESIGNED BY: D. BURHANS	CHECKED BY: D. BRYANT
ROADWAY CROSS SECTIONS - 15	SHEET 116 OF 154

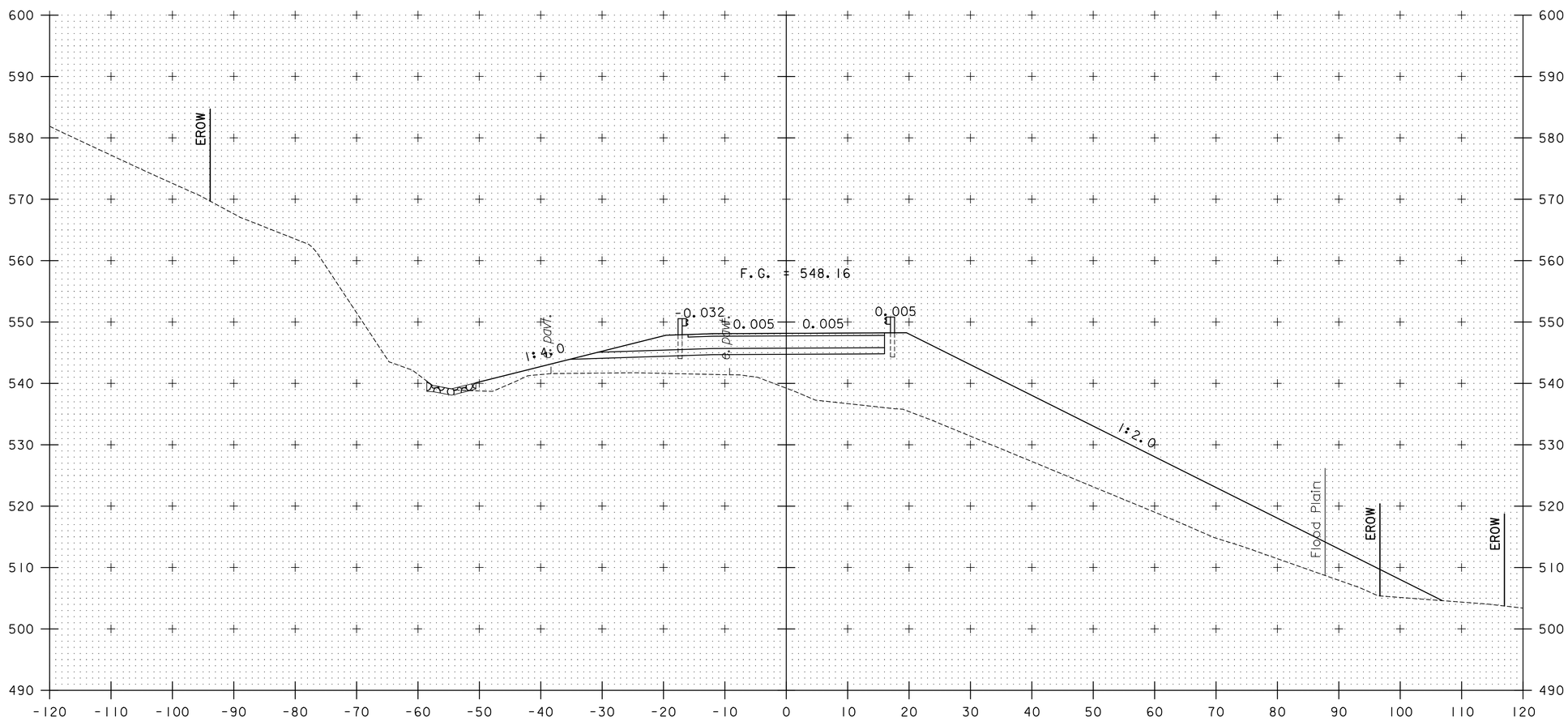

20+50

PROJECT NAME:	MIDDLESEX
PROJECT NUMBER:	IM 089-2(41)

FILE NAME: z07a052xs.dgn	PLOT DATE: 1/3/2015
PROJECT LEADER: R. HEBERT	DRAWN BY: J. DAVIS
DESIGNED BY: D. BURHANS	CHECKED BY: D. BRYANT
ROADWAY CROSS SECTIONS - 16	SHEET 117 OF 154

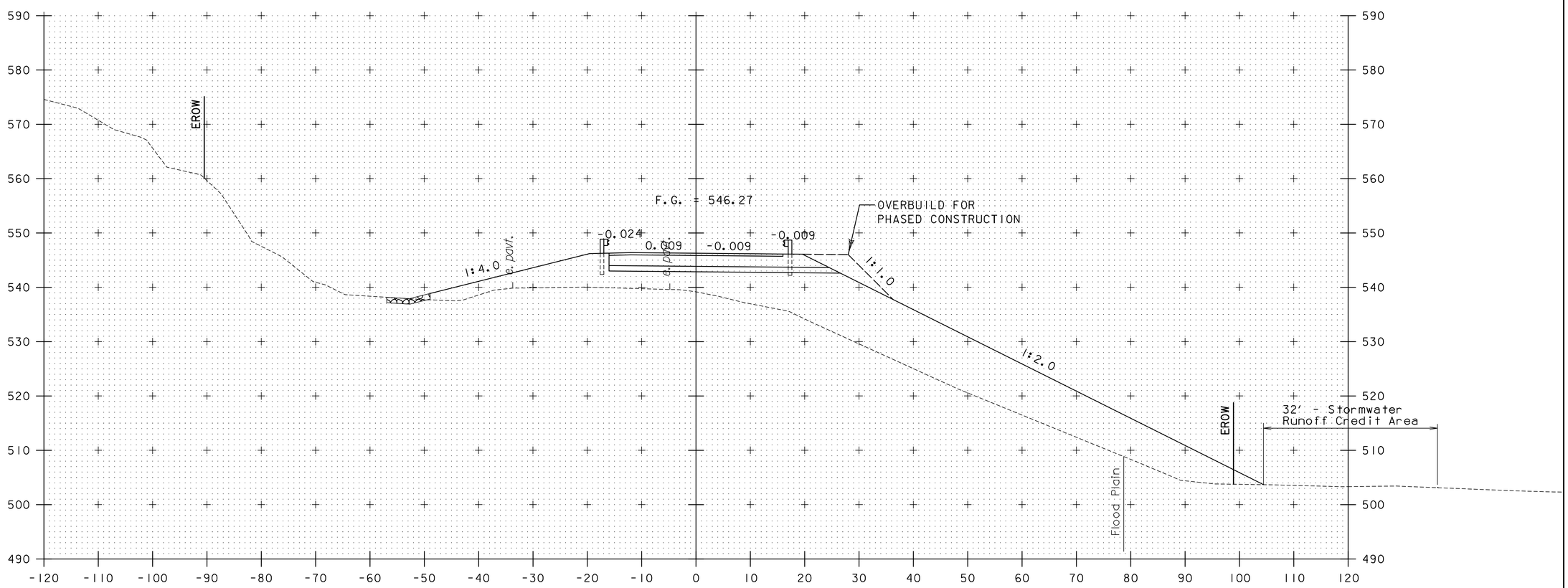

21+00

PROJECT NAME:	MIDDLESEX
PROJECT NUMBER:	IM 089-2(41)

FILE NAME: z07d052xs.dgn	PLOT DATE: 1/3/2015
PROJECT LEADER: R. HEBERT	DRAWN BY: J. DAVIS
DESIGNED BY: D. BURHANS	CHECKED BY: D. BRYANT
ROADWAY CROSS SECTIONS - 17	SHEET 118 OF 154

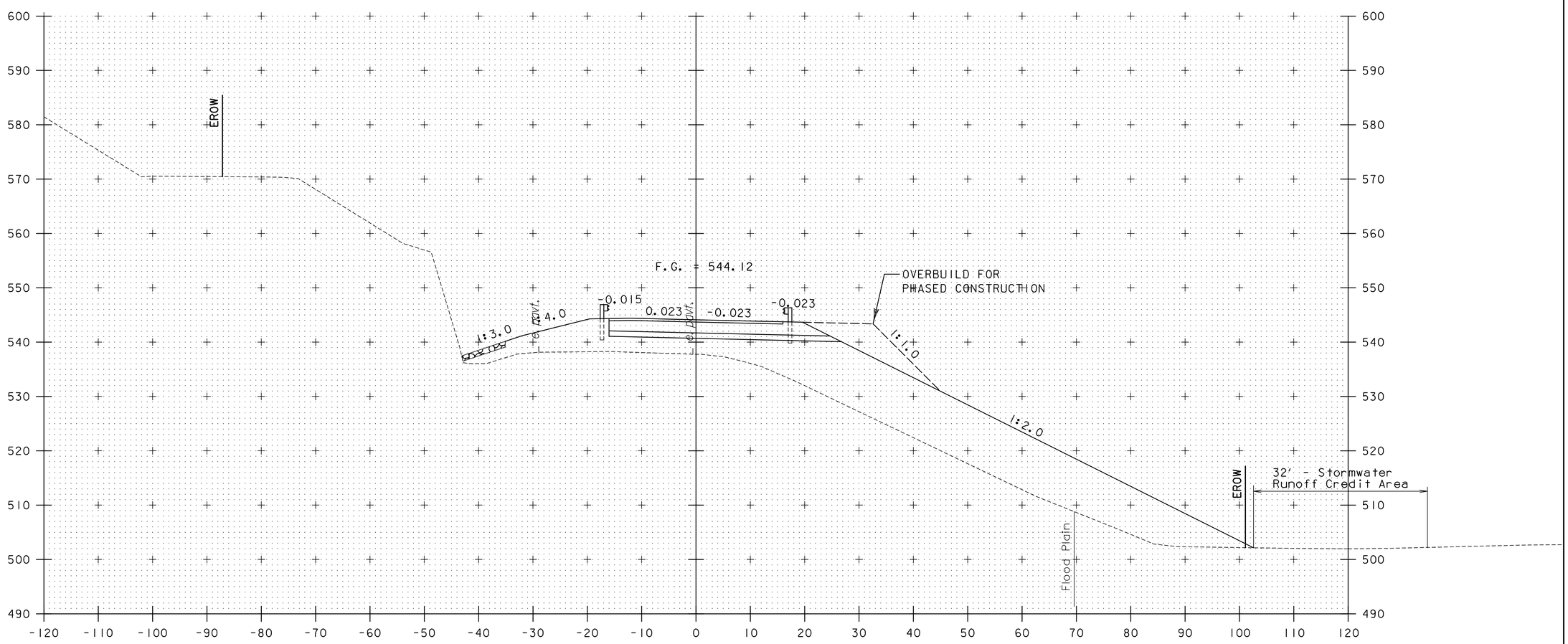

21+50

PROJECT NAME:	MIDDLESEX
PROJECT NUMBER:	IM 089-2(41)

FILE NAME: z07a052xs.dgn	PLOT DATE: 1/3/2015
PROJECT LEADER: R. HEBERT	DRAWN BY: J. DAVIS
DESIGNED BY: D. BURHANS	CHECKED BY: D. BRYANT
ROADWAY CROSS SECTIONS - 18	SHEET 119 OF 154

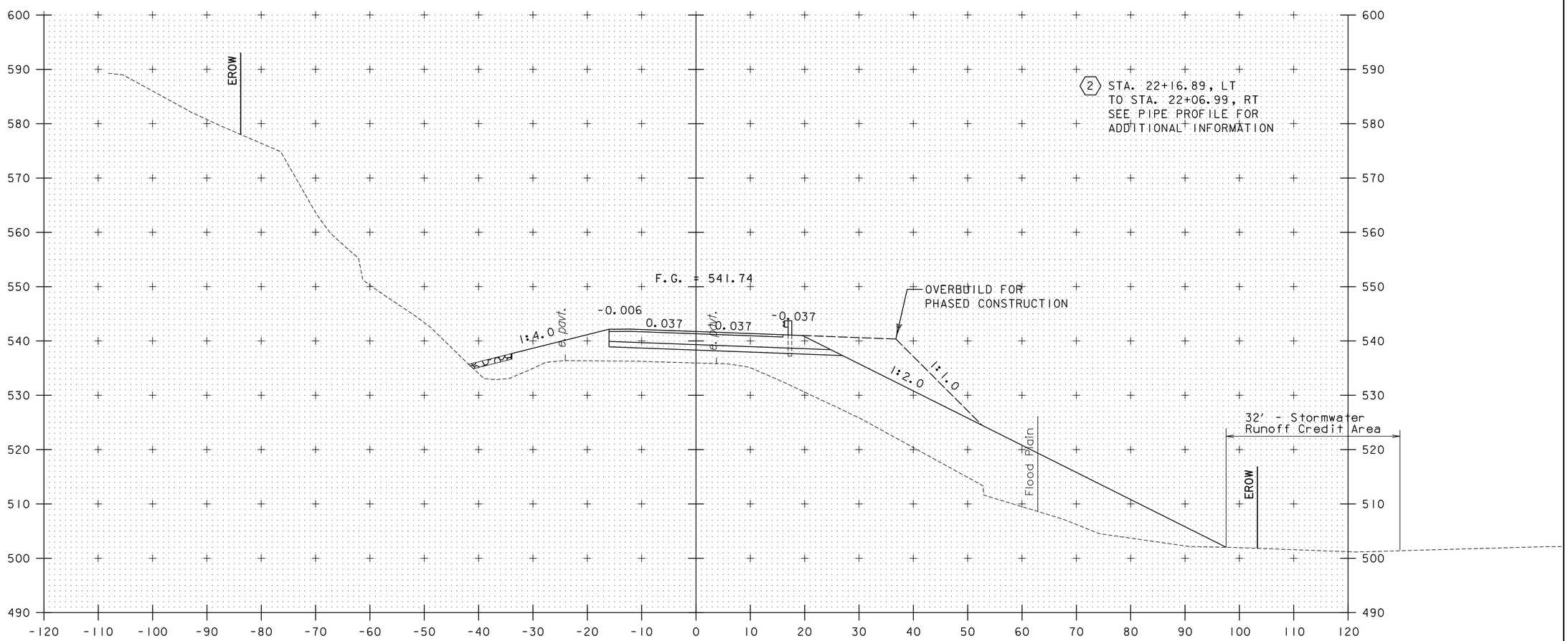

22+00

PROJECT NAME:	MIDDLESEX
PROJECT NUMBER:	IM 089-2(41)

FILE NAME: z07a052xs.dgn	PLOT DATE: 1/3/2015
PROJECT LEADER: R. HEBERT	DRAWN BY: J. DAVIS
DESIGNED BY: D. BURHANS	CHECKED BY: D. BRYANT
ROADWAY CROSS SECTIONS - 19	SHEET 120 OF 154

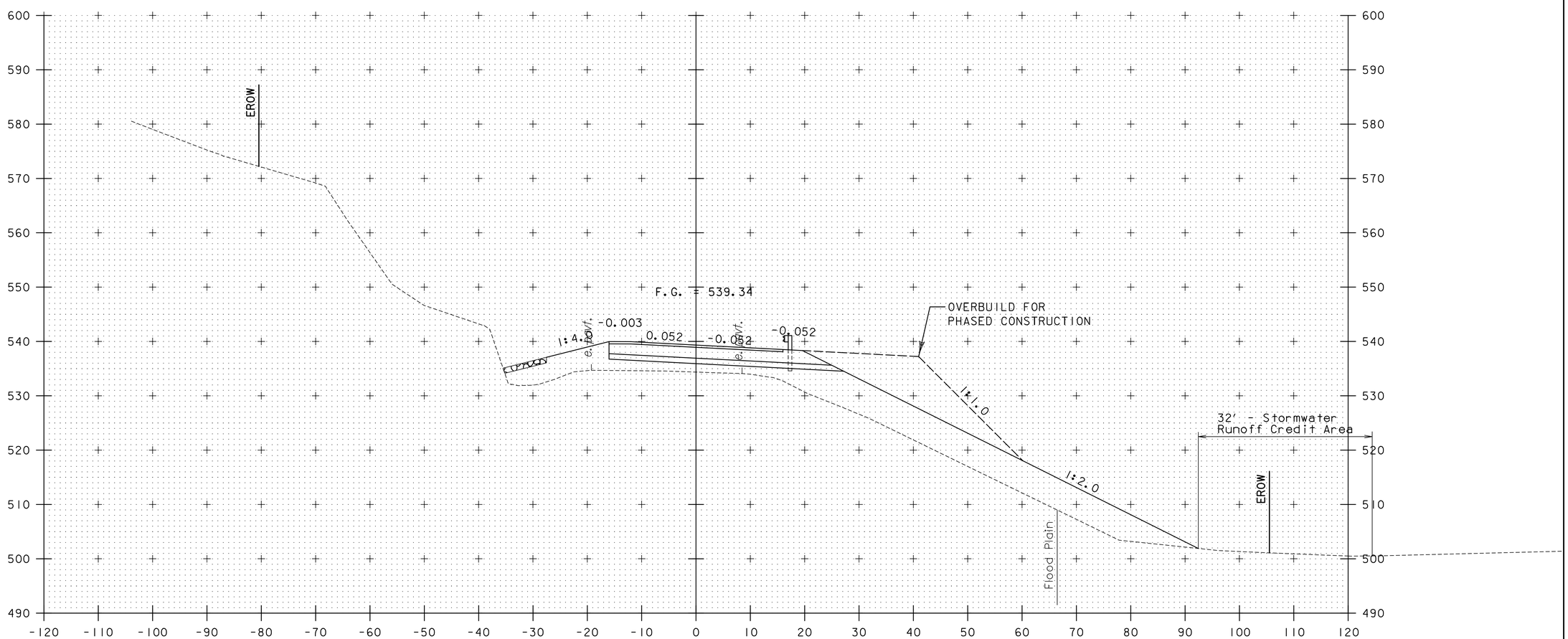

22+50

PROJECT NAME: MIDDLESEX	
PROJECT NUMBER: IM 089-2(41)	
FILE NAME: z07a052xs.dgn	PLOT DATE: 1/3/2015
PROJECT LEADER: R. HEBERT	DRAWN BY: J. DAVIS
DESIGNED BY: D. BURHANS	CHECKED BY: D. BRYANT
ROADWAY CROSS SECTIONS - 20	SHEET 121 OF 154

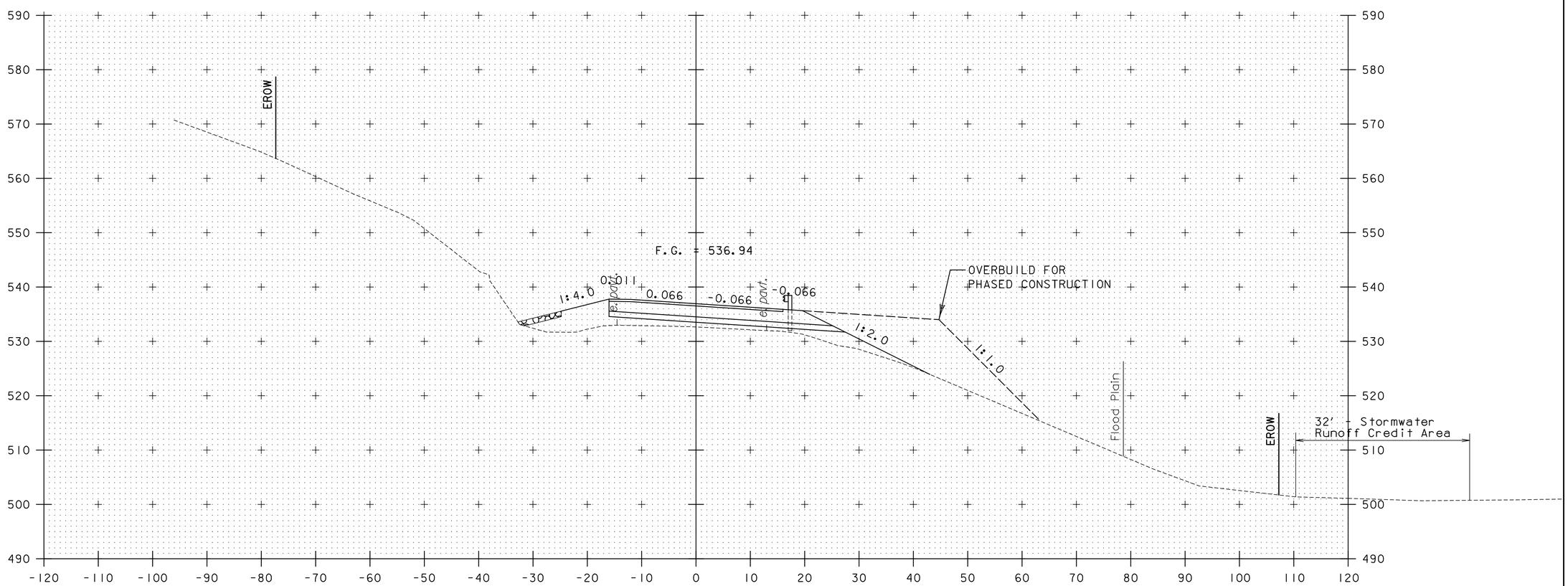

23+00

PROJECT NAME:	MIDDLESEX
PROJECT NUMBER:	IM 089-2(41)

FILE NAME: z07a052xs.dgn	PLOT DATE: 1/3/2015
PROJECT LEADER: R. HEBERT	DRAWN BY: J. DAVIS
DESIGNED BY: D. BURHANS	CHECKED BY: D. BRYANT
ROADWAY CROSS SECTIONS - 21	SHEET 122 OF 154

U.S. ROUTE 2
STA 23+50.00
END PROJECT
IM 089-2 (41)
BEGIN APPROACH

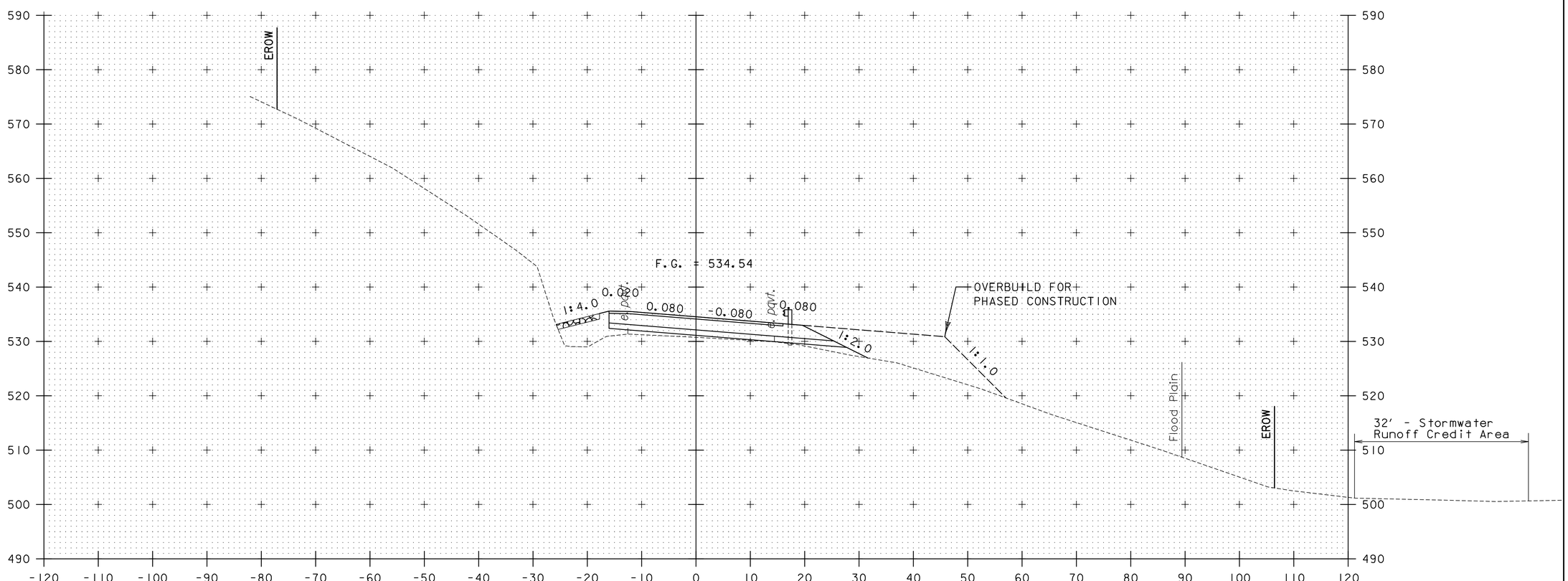

23+50

PROJECT NAME:	MIDDLESEX
PROJECT NUMBER:	IM 089-2(41)

FILE NAME: z07a052xs.dgn	PLOT DATE: 1/3/2015
PROJECT LEADER: R. HEBERT	DRAWN BY: J. DAVIS
DESIGNED BY: D. BURHANS	CHECKED BY: D. BRYANT
ROADWAY CROSS SECTIONS - 22	SHEET 123 OF 154

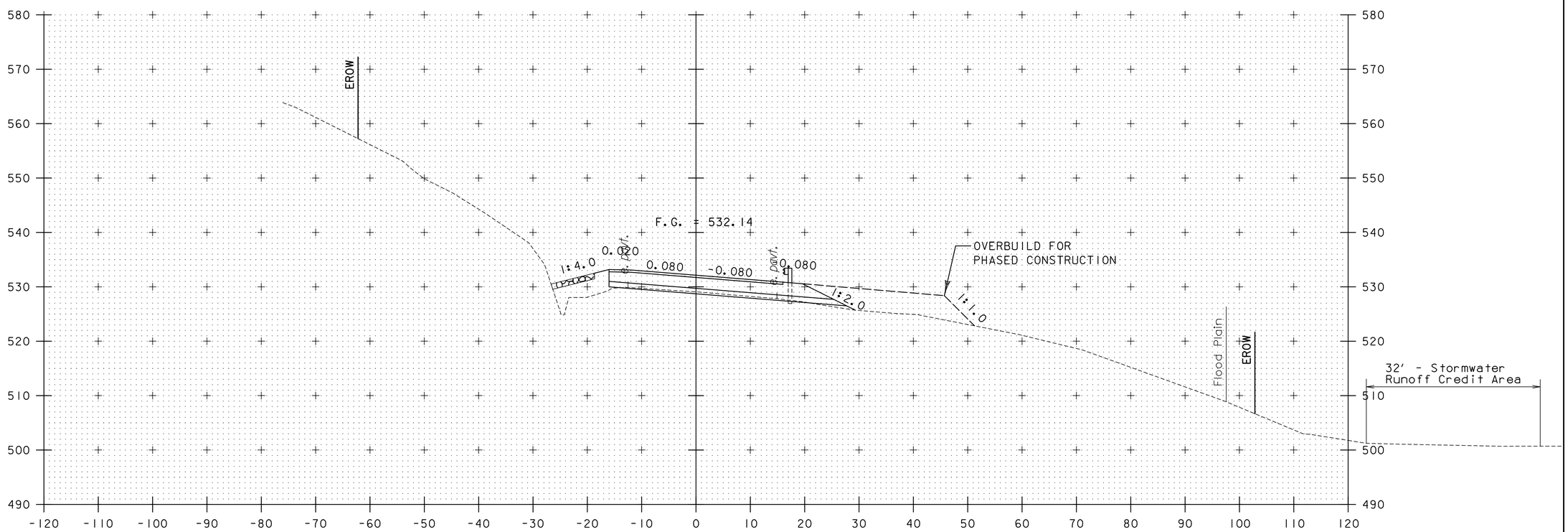

24+00

PROJECT NAME:	MIDDLESEX
PROJECT NUMBER:	IM 089-2(41)

FILE NAME: z07a052xs.dgn	PLOT DATE: 1/3/2015
PROJECT LEADER: R. HEBERT	DRAWN BY: J. DAVIS
DESIGNED BY: D. BURHANS	CHECKED BY: D. BRYANT
ROADWAY CROSS SECTIONS - 23	SHEET 124 OF 154

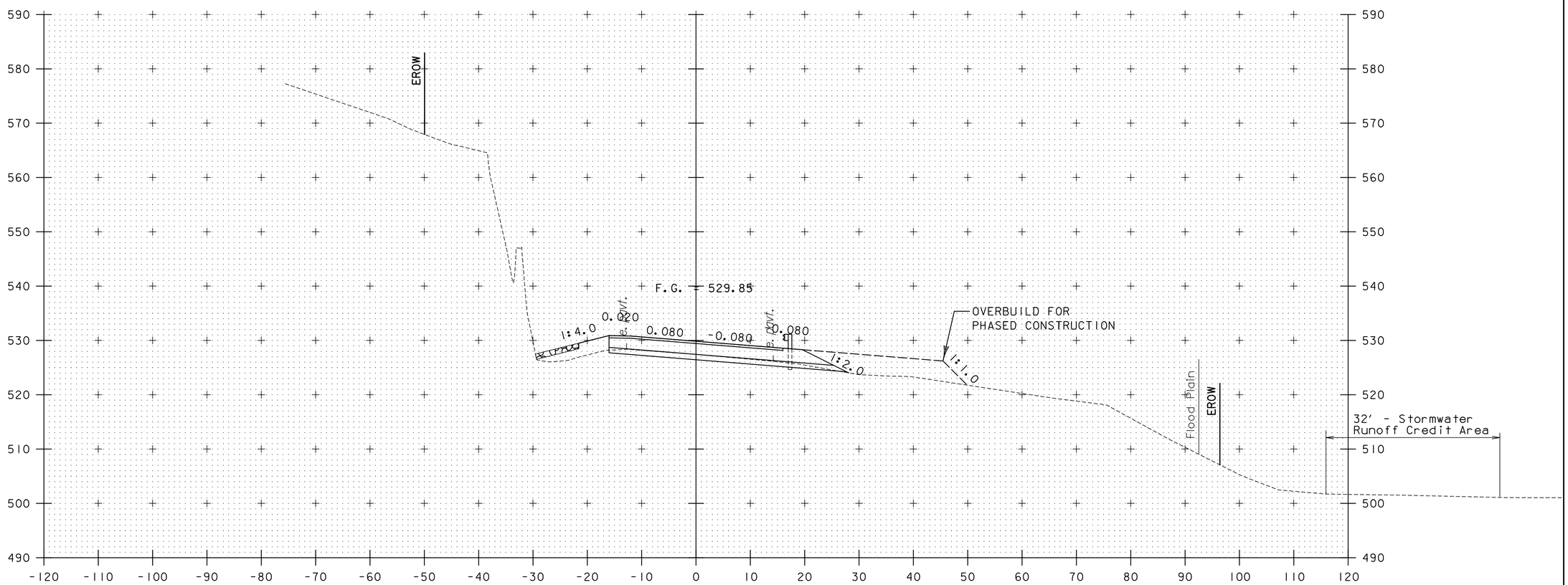

24+50

PROJECT NAME: MIDDLESEX	
PROJECT NUMBER: IM 089-2(41)	
FILE NAME: z07a052xs.dgn	PLOT DATE: 1/3/2015
PROJECT LEADER: R. HEBERT	DRAWN BY: J. DAVIS
DESIGNED BY: D. BURHANS	CHECKED BY: D. BRYANT
ROADWAY CROSS SECTIONS - 24	SHEET 125 OF 154

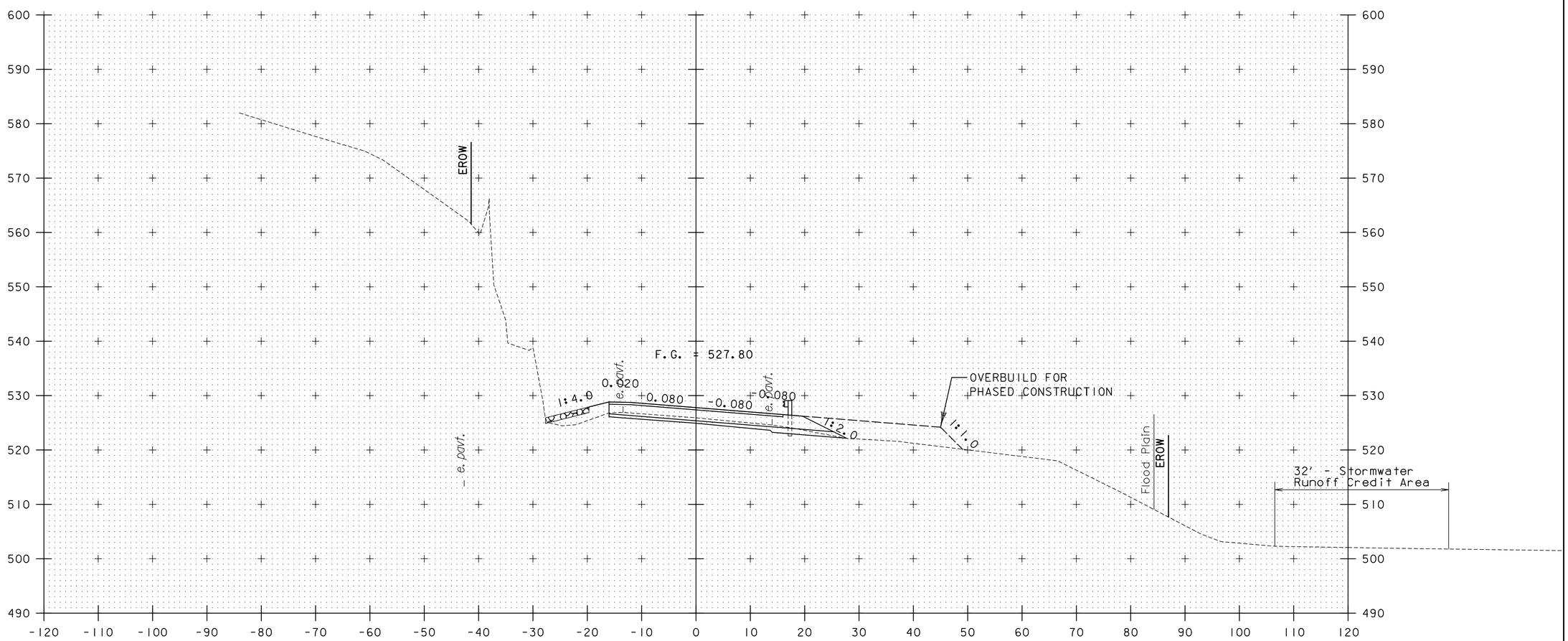

25+00

PROJECT NAME:	MIDDLESEX
PROJECT NUMBER:	IM 089-2(41)

FILE NAME: z07d052xs.dgn	PLOT DATE: 1/3/2015
PROJECT LEADER: R. HEBERT	DRAWN BY: J. DAVIS
DESIGNED BY: D. BURHANS	CHECKED BY: D. BRYANT
ROADWAY CROSS SECTIONS - 25	SHEET 126 OF 154

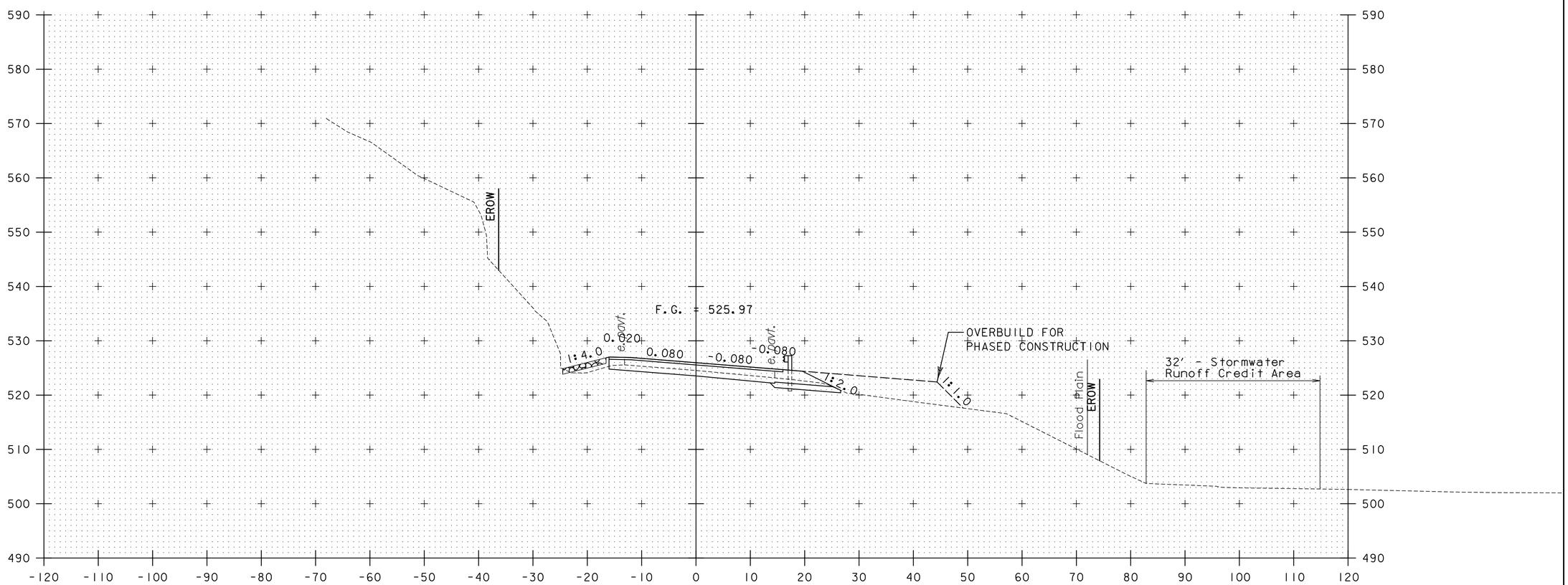

25+50

PROJECT NAME:	MIDDLESEX
PROJECT NUMBER:	IM 089-2(41)

FILE NAME: z07a052xs.dgn	PLOT DATE: 1/3/2015
PROJECT LEADER: R. HEBERT	DRAWN BY: J. DAVIS
DESIGNED BY: D. BURHANS	CHECKED BY: D. BRYANT
ROADWAY CROSS SECTIONS - 26	SHEET 127 OF 154

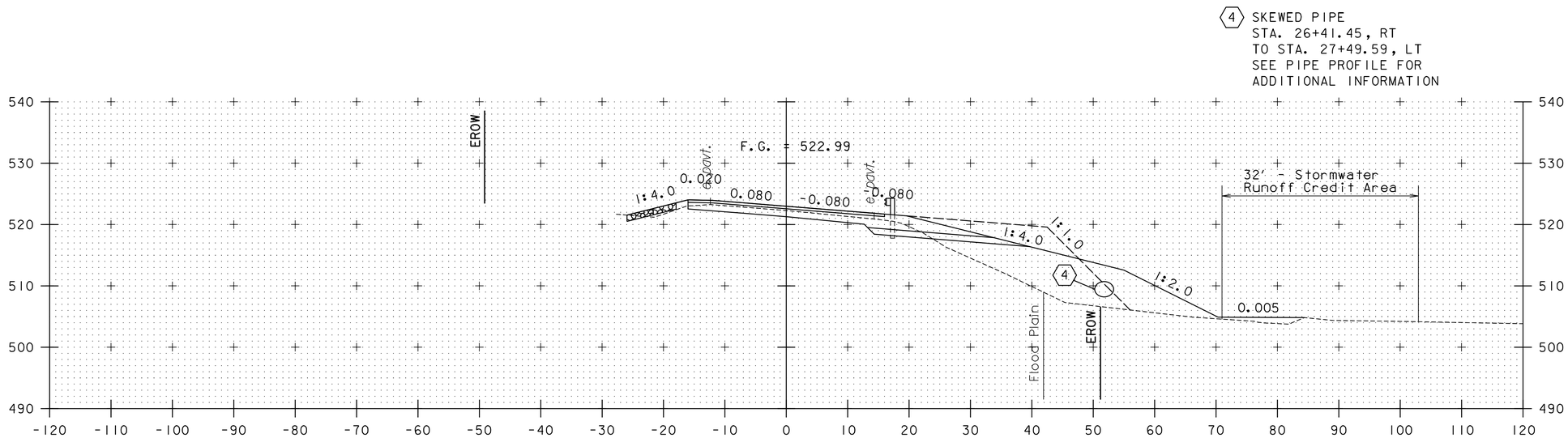

26+50

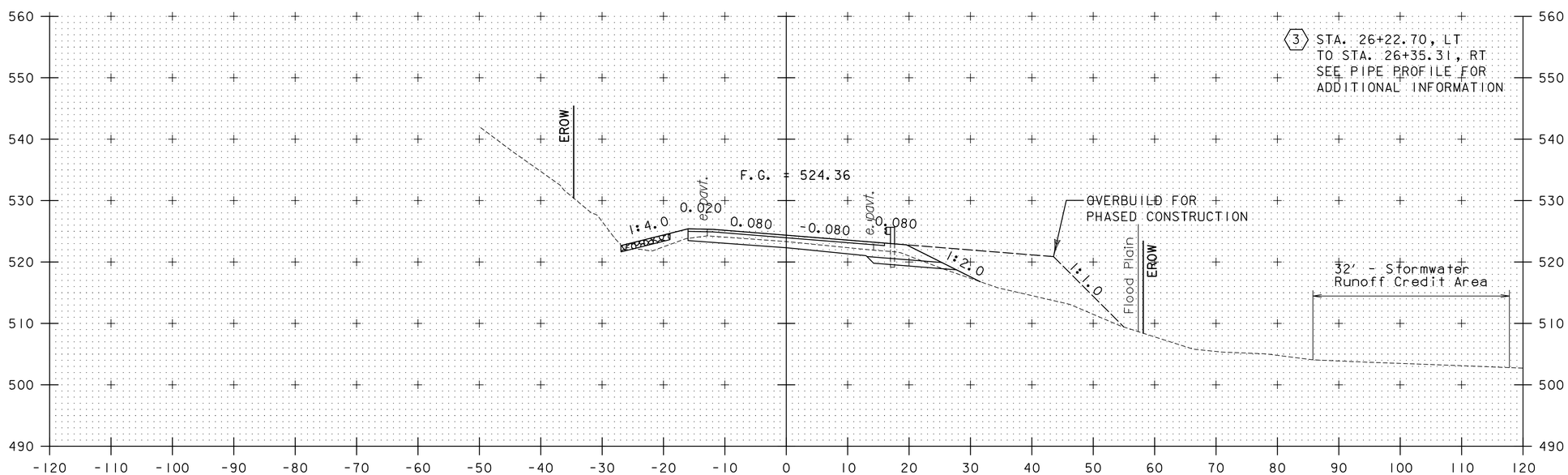

26+00

PROJECT NAME: MIDDLESEX	
PROJECT NUMBER: IM 089-2(41)	
FILE NAME: z07a052xs.dgn	PLOT DATE: 1/3/2015
PROJECT LEADER: R. HEBERT	DRAWN BY: J. DAVIS
DESIGNED BY: D. BURHANS	CHECKED BY: D. BRYANT
ROADWAY CROSS SECTIONS - 27	SHEET 128 OF 154

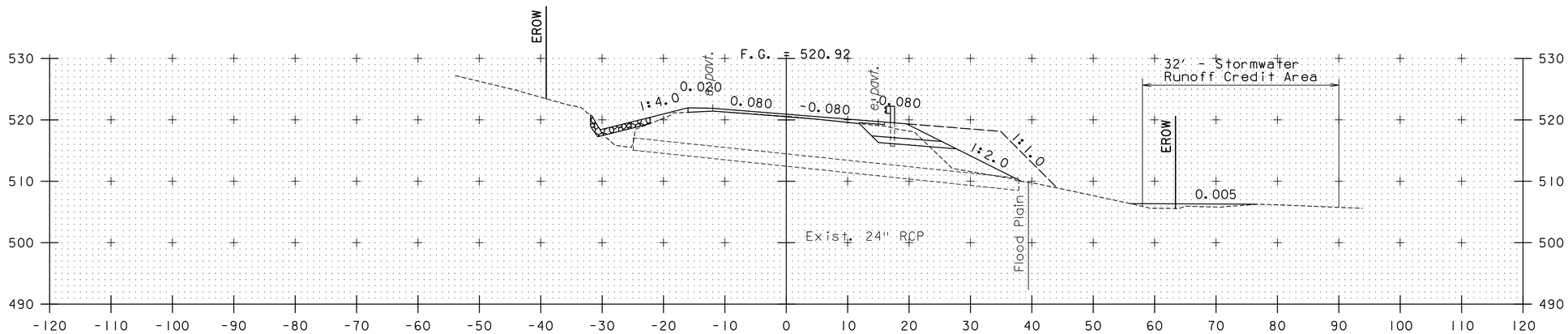

4 SKEWED PIPE
STA. 26+41.45, RT
TO STA. 27+49.59, LT
SEE PIPE PROFILE FOR
ADDITIONAL INFORMATION

27+50

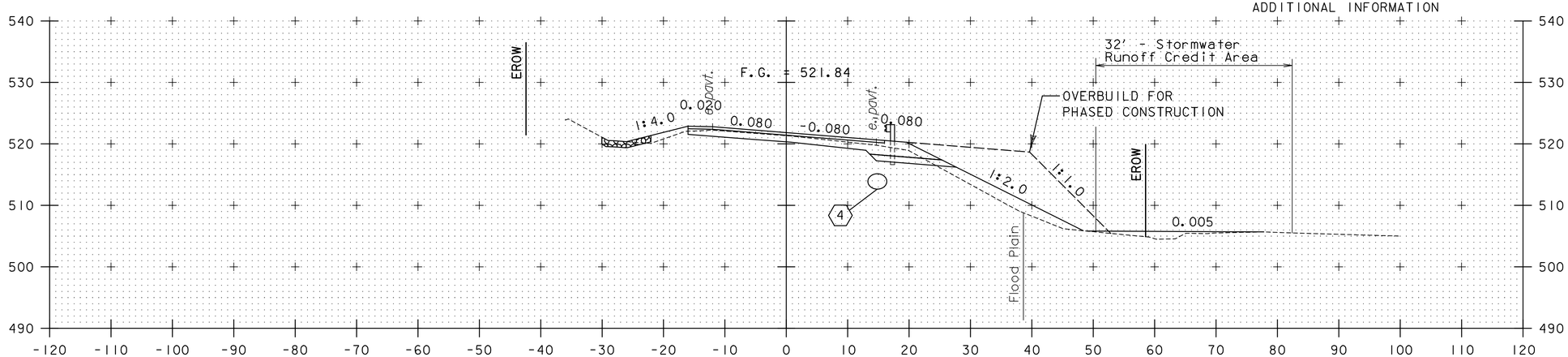

27+00

PROJECT NAME:	MIDDLESEX
PROJECT NUMBER:	IM 089-2(41)

FILE NAME: z07a052xs.dgn	PLOT DATE: 1/3/2015
PROJECT LEADER: R. HEBERT	DRAWN BY: J. DAVIS
DESIGNED BY: D. BURHANS	CHECKED BY: D. BRYANT
ROADWAY CROSS SECTIONSS - 28	SHEET 129 OF 154

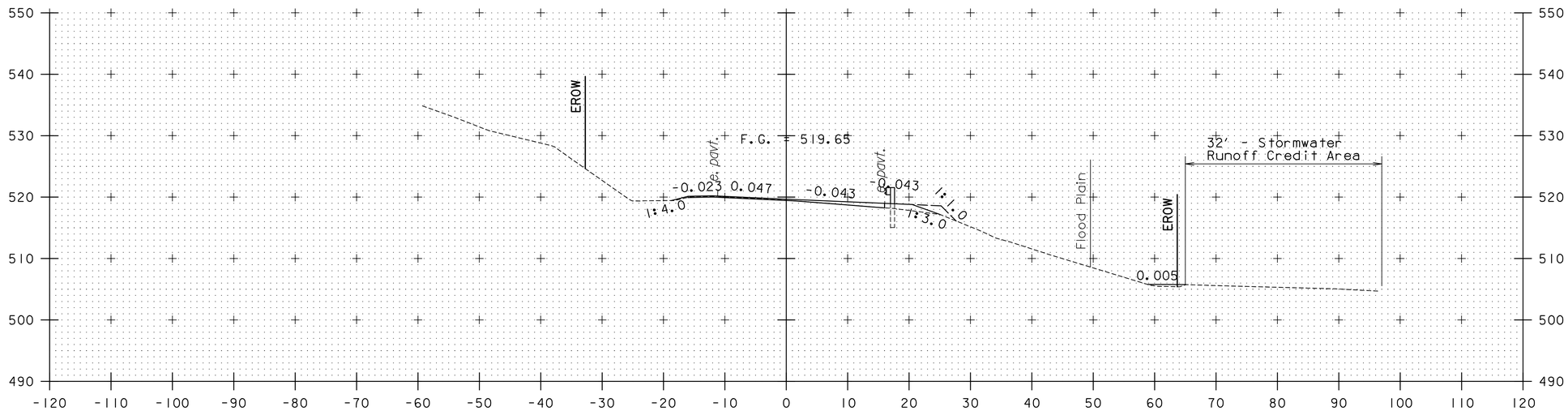

28+50

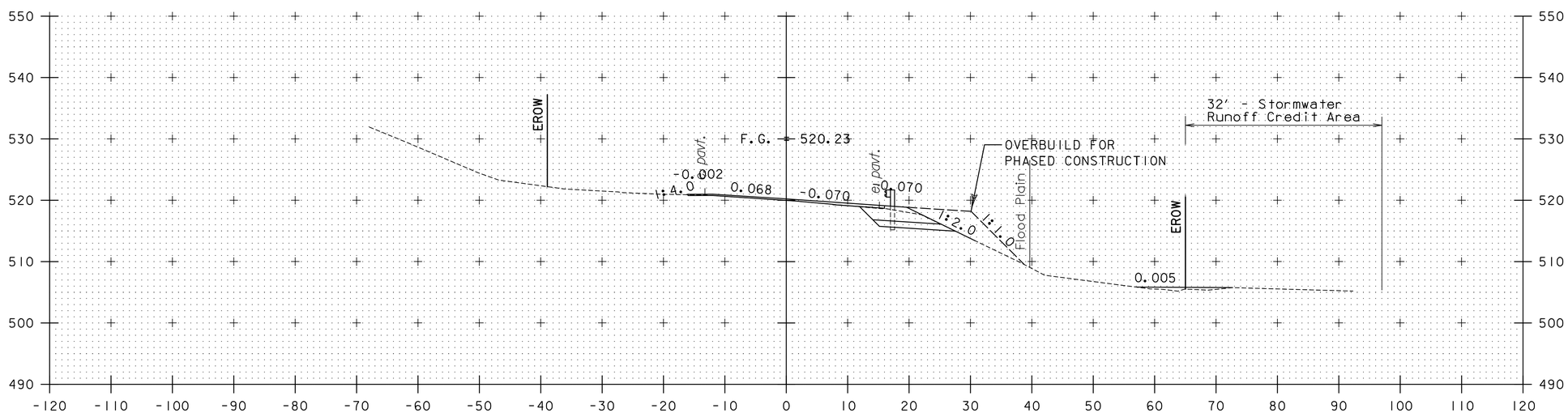

28+00

PROJECT NAME: MIDDLESEX	
PROJECT NUMBER: IM 089-2(41)	
FILE NAME: z07a052xs.dgn	PLOT DATE: 1/3/2015
PROJECT LEADER: R. HEBERT	DRAWN BY: J. DAVIS
DESIGNED BY: D. BURHANS	CHECKED BY: D. BRYANT
ROADWAY CROSS SECTIONSS - 29	SHEET 130 OF 154

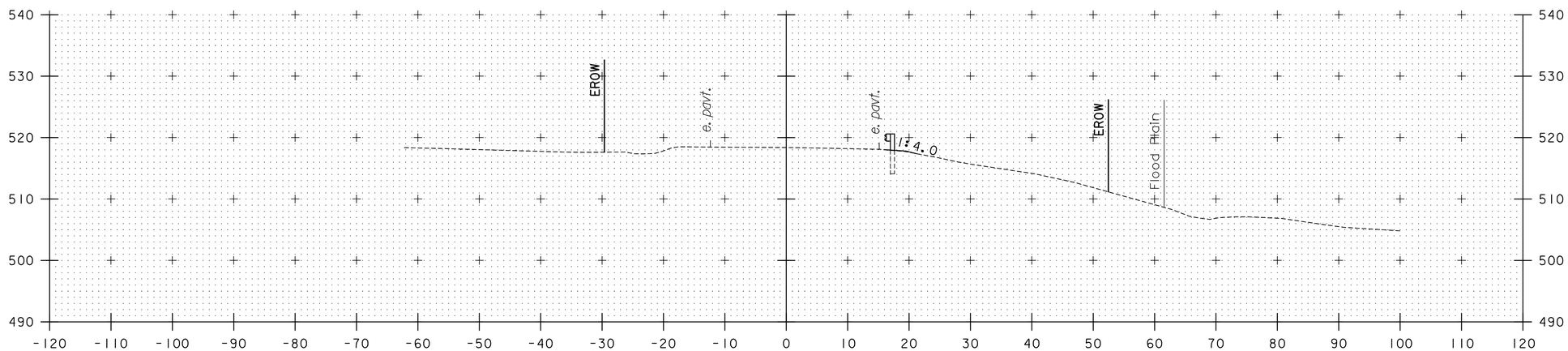

29+50

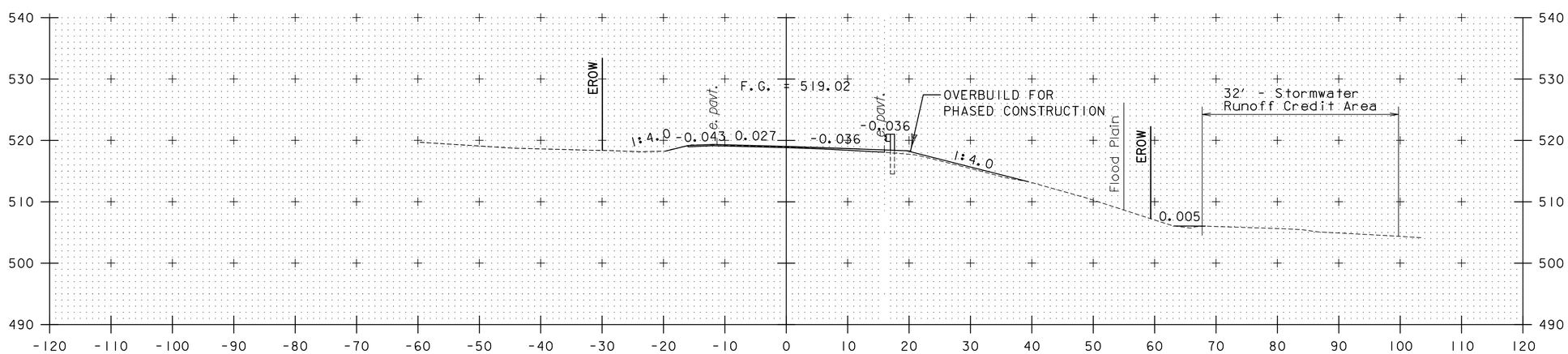

29+00

PROJECT NAME: MIDDLESEX	
PROJECT NUMBER: IM 089-2(41)	
FILE NAME: z07a052xs.dgn	PLOT DATE: 1/3/2015
PROJECT LEADER: R. HEBERT	DRAWN BY: J. DAVIS
DESIGNED BY: D. BURHANS	CHECKED BY: D. BRYANT
ROADWAY CROSS SECTIONSS - 30	SHEET 131 OF 154

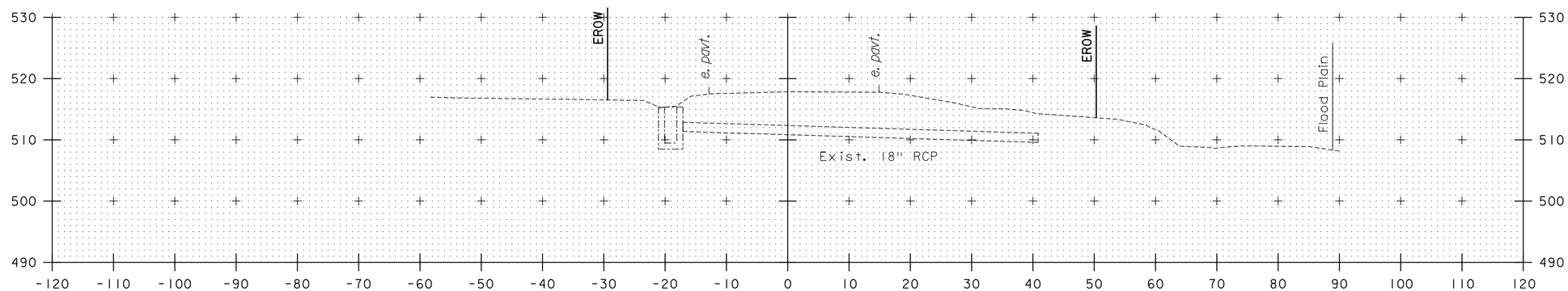

30+00

U.S. ROUTE 2
STA 29+50.00
END APPROACH
MATCH EXISTING
PAVEMENT

PROJECT NAME: MIDDLESEX	
PROJECT NUMBER: IM 089-2(41)	
FILE NAME: z07a052xs.dgn	PLOT DATE: 1/3/2015
PROJECT LEADER: R. HEBERT	DRAWN BY: J. DAVIS
DESIGNED BY: D. BURHANS	CHECKED BY: D. BRYANT
ROADWAY CROSS SECTIONSS - 31	SHEET 132 OF 154

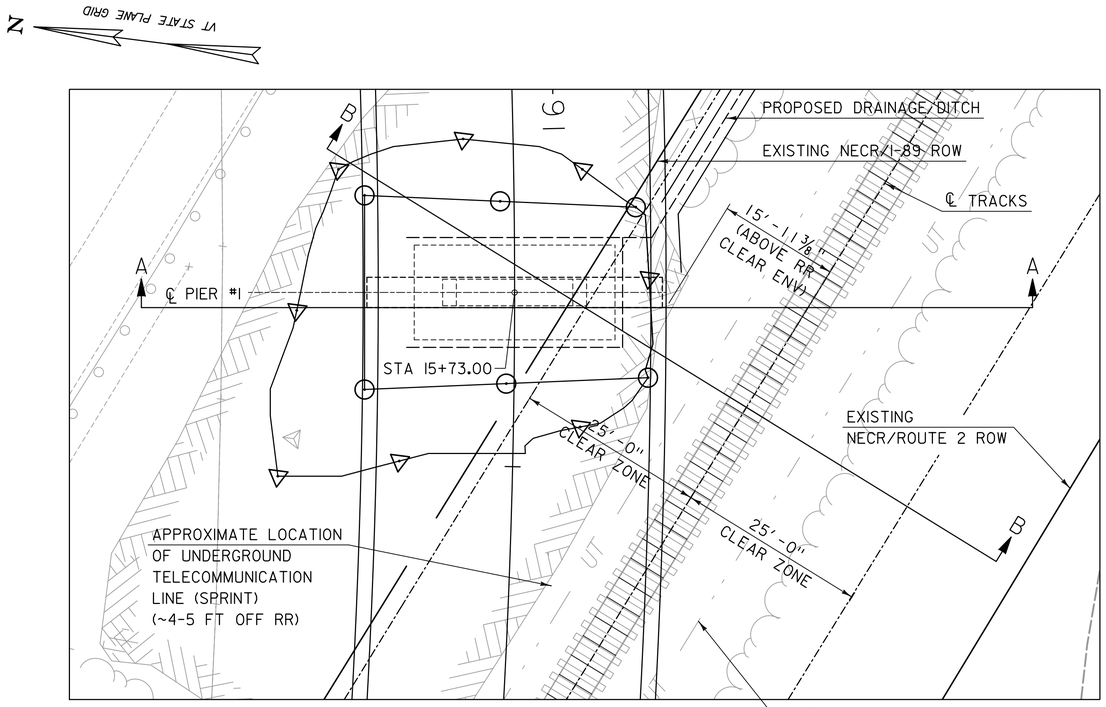

PLAN

SCALE: 1" = 10'-0"

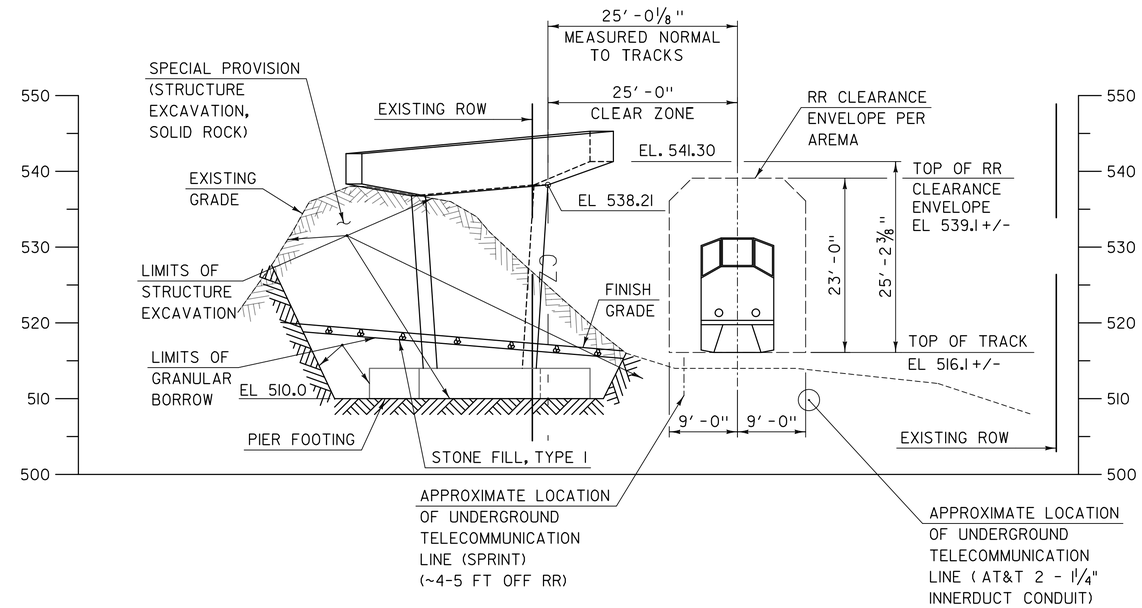

SECTION B-B

SCALE: 1" = 10'-0"
(VIEW NORMAL TO TRACKS)

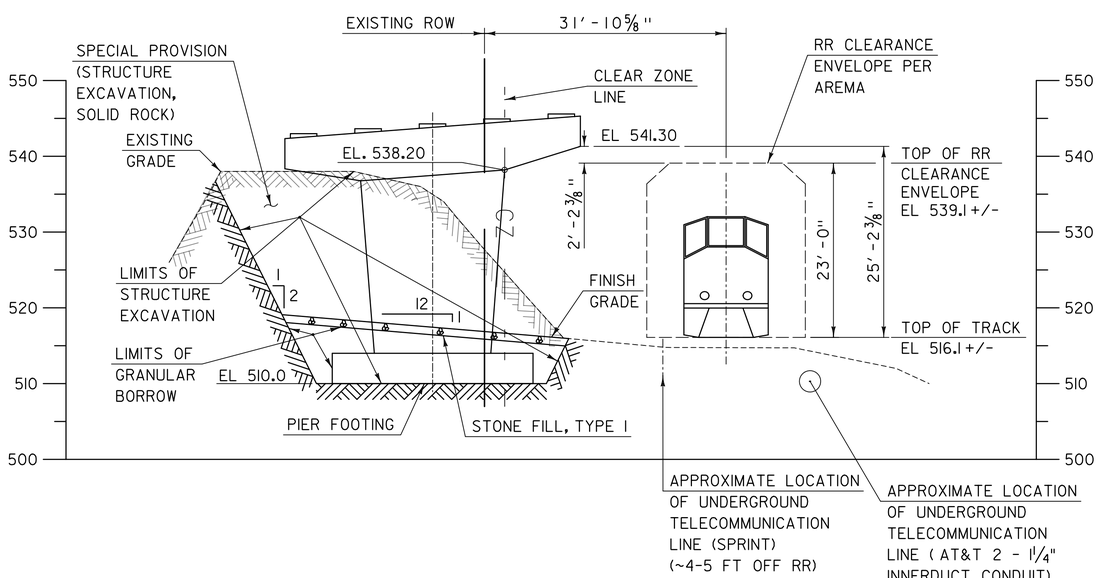

SECTION A-A

SCALE: 1" = 10'-0"
(VIEW NORMAL TO PIER)

PROJECT NAME: MIDDLESEX	
PROJECT NUMBER: IM 089-2(41)	
FILE NAME: z07a052bdrrrclr.dgn	PLOT DATE: 1/3/2015
PROJECT LEADER: R. HEBERT	DRAWN BY: S. MORGAN
DESIGNED BY: J. OLUND	CHECKED BY: R. HEBERT
RAILROAD CLEARANCE SECTIONS	SHEET 133 OF 154

EROSION CONTROL NARRATIVE

1 PROJECT DESCRIPTION

THIS PROJECT INVOLVES THE REPLACEMENT OF THE BRIDGE ON U.S.2 SPANNING OVER THE NEW ENGLAND CENTRAL RAILROAD AND INTERSTATE 89 IN THE TOWN OF MIDDLESEX. WORK WILL INVOLVE REPLACEMENT OF BOTH ABUTMENTS, THE EXISTING PIERS, AND THE BRIDGE SUPERSTRUCTURE ON A NEW ALIGNMENT LOCATED IMMEDIATELY SOUTH OF THE EXISTING ALIGNMENT. EXISTING ABUTMENTS, PIERS AND FOUNDATION PILES WILL BE REMOVED TO A LIMIT EXTENDING A MINIMUM OF 1 FOOT BELOW PROPOSED GROUND. ALSO INCLUDED WILL BE RELATED ROADWAY APPROACH WORK. THE LENGTH OF THE PROJECT IS APPROXIMATELY 2,150 FEET ALONG U.S. ROUTE 2 INCLUDING APPROACH WORK. THE SITE IS LOCATED, BASED ON NAD 83(96) AT 647343.04 N, 1601767.23 E (POINT HVCTRL #8 - SEE TIE SHEET).

2 AREA OF DISTURBANCE

AREA OF DISTURBANCE INCLUDES LIMITS OF EARTH DISTURBANCE WITHIN THE PROJECT AREA AS SHOWN ON THE ATTACHED EPSC PLAN. THE AREA OF DISTURBANCE DOES NOT INCLUDE WASTE, BORROW, STAGING OR STOCKPILE AREAS. THE CONTRACTOR IS RESPONSIBLE FOR SUBMITTING THE LOCATION OF THE WASTE, BORROW, STAGING AND STOCKPILE AREAS (ALSO SEE SECTION 6 BELOW), AS WELL AS THE REFUELING AND MAINTENANCE AREAS. A MAP SHALL BE ATTACHED IF NECESSARY.

TOTAL AREA OF DISTURBANCE IS APPROXIMATELY 235,242 SF (5.40 ACRES).

IT IS ANTICIPATED THAT THE PROJECT WILL LAST TWO CONSTRUCTION SEASONS.

SEE BREAKDOWN OF DISTURBANCE PER DRAINAGE AREA IN SECTION 5 BELOW AS WELL AS THE ATTACHED MAP(S).

3. CONSTRUCTION SEQUENCE

THE SPECIFIC CONSTRUCTION SEQUENCE SHALL BE DEVELOPED BY THE CONTRACTOR USING THE GUIDANCE OUTLINED IN THIS NARRATIVE AND THE VTRANS EPSC PLAN CONTRACTOR CHECKLIST. THE CONTRACTOR SHALL SEQUENCE CONSTRUCTION ACTIVITIES TO MINIMIZE THE EXTENT OF DISTURBED SOILS LEFT OPEN TO EROSION AT ANY GIVEN TIME. A PROPOSED GENERAL SEQUENCE FOR EACH OF THE MAJOR CONSTRUCTION ACTIVITIES IS AS FOLLOWS:

- **CONSTRUCT A PORTION OF THE PERMANENT ROADWAY, WIDENING FOR MAINTENANCE OF TRAFFIC, AND THE PERMANENT REPLACEMENT BRIDGE (PHASE I)**
  1. ESTABLISH PERIMETER CONTROLS AND MARK BOUNDARIES FOR SENSITIVE RESOURCE AREAS, SUCH AS WETLANDS AND RIPARIAN BUFFER ZONES.
  2. INSTALL SEDIMENT CONTROL MEASURES.
  3. CLEARING.
  4. INSTALL TEMPORARY BARRIER AND SHIFT TRAFFIC TO THE NORTHERN SIDE OF THE EXISTING APPROACHES WITH REDUCED TRAVELWAY WIDTHS AS SCHEMATICALLY SHOWN.
  5. INSTALL SHEETING AND BRACING NEAR PROPOSED NORTH AND SOUTH ABUTMENTS, AS SHOWN CONCEPTUALLY.
  6. CONSTRUCT PROPOSED SOUTH SIDE APPROACHES TO TOP OF BINDER COURSE FROM STA. 8+00 TO STA. 12+00 AND FROM STA. 26+50 TO STA. 31+00 (DO NOT CONSTRUCT WEARING COURSE), CONSTRUCT SOUTH SIDE APPROACHES TO TOP OF WEARING COURSE IN OTHER LOCATIONS. CONSTRUCT ABUTMENTS, PIERS, MSE WALLS #1 & #3 AND BRIDGE SUPERSTRUCTURE. LIMIT AREA OF DISTURBANCE TO < 5 ACRES AT ANY ONE TIME.
  7. CONCURRENTLY INSTALL TEMPORARY AND PERMANENT STABILIZATION AND EPSC MEASURES AS WORK PROGRESSES SO THAT EMBANKMENT IS STABILIZED PRIOR TO ALLOWING RUNOFF TO DISCHARGE TO IT.
  8. INSTALL 60" DRAIN PIPE DURING THE WESTERLY APPROACH EMBANKMENT (PIPE #1). INSTALL 24" DRAIN PIPE (PIPE #2), 42" DRAIN PIPE (PIPE #3), AND 42" DRAIN PIPE (PIPE #3) DURING EASTERLY APPROACH EMBANKMENT. INSTALL ALL STRUCTURES ASSOCIATED WITH DRAINAGE PIPES.
  9. FINAL GRADE AND STABILIZE ALL EARTH DISTURBANCE AS WORK PROGRESSES.
  10. PAVE ROADWAY AND SHOULDERS (NOT INCLUDING WEARING COURSE) AS SOON AS SUFFICIENT LENGTH OF ROADWAY IS CONSTRUCTED.
- **CONSTRUCT REMAINING PORTION OF APPROACH ROADWAY (PHASE 2)**
  1. ESTABLISH PERIMETER CONTROLS AND MARK BOUNDARIES FOR SENSITIVE RESOURCE AREAS, SUCH AS WETLANDS AND RIPARIAN BUFFER ZONES.
  2. INSTALL SEDIMENT CONTROL MEASURES.
  3. INSTALL TEMPORARY BARRIER AND SHIFT TRAFFIC TO THE SOUTH SIDE OF THE PROPOSED APPROACHES AND FROM EXISTING BRIDGE TO NEW BRIDGE WITH REDUCED LANE WIDTHS AS SCHEMATICALLY SHOWN.
  4. REMOVE THE EXISTING BRIDGE AND APPROACHES TO THE EXTENTS SHOWN.
  5. CLEARING.
  6. CONSTRUCT PROPOSED NORTH SIDE APPROACHES TO TOP OF BINDER COURSE FROM STA. 8+00 TO STA. 12+00 AND FROM STA. 26+50 TO STA. 31+00 (DO NOT CONSTRUCT WEARING COURSE). CONSTRUCT PROPOSED NORTH SIDE APPROACHES TO TOP OF WEARING COURSE IN OTHER LOCATIONS, AND MSE WALL #2. LIMIT AREA OF DISTURBANCE TO < 5 ACRES AT ANY ONE TIME.
  7. CONCURRENTLY INSTALL TEMPORARY AND PERMANENT STABILIZATION AND EPSC MEASURES AS WORK PROGRESSES SO THAT EMBANKMENT IS STABILIZED PRIOR TO ALLOWING RUNOFF TO DISCHARGE TO IT.
  8. REMOVE SHEETING AND BRACING NEAR PROPOSED ABUTMENTS 1 & 2.
  9. FINAL GRADE AND STABILIZE ALL EARTH DISTURBANCE AS WORK PROGRESSES.
  10. PAVE ROADWAY AND SHOULDERS (NOT INCLUDING WEARING COURSE) AS SOON AS SUFFICIENT LENGTH OF ROADWAY IS CONSTRUCTED.
- **FINALIZE PAVING AND INSTALL GUARDRAIL (PHASE 3)**
  1. ESTABLISH PERIMETER CONTROLS AND MARK BOUNDARIES FOR SENSITIVE RESOURCE AREAS, SUCH AS WETLANDS AND RIPARIAN BUFFER ZONES.
  2. INSTALL SEDIMENT CONTROL MEASURES.
  3. REMOVE TEMPORARY BARRIER AND SHIFT TRAFFIC TO THE PROPOSED TRAVELWAY AS CONCEPTUALLY SHOWN.
  4. REMOVE TEMPORARY ROADWAY WIDENING PAVEMENT AND FILL BEYOND FINAL ROADWAY LIMITS ON THE SOUTH SIDE OF ROUTE 2.
  5. USING LIMITED LANE CLOSURES AND ONE WAY ALTERNATING TRAFFIC COMPLETE APPROACH PAVING (SHIM AND WEARING COURSE - STA. 8+00 TO STA. 12+00 AND STA. 26+50 TO STA. 31+00) REMAINING TEMPORARY FILL REMOVAL, AND REMAINING GUARDRAIL INSTALLATION. LIMIT AREA OF DISTURBANCE TO < 5 ACRES AT ANY ONE TIME.
  6. CONCURRENTLY INSTALL TEMPORARY AND PERMANENT STABILIZATION AND EPSC MEASURES AS WORK PROGRESSES SO THAT EMBANKMENT IS STABILIZED PRIOR TO ALLOWING RUNOFF TO DISCHARGE TO IT.
- **SITE RESTORATION (PHASE 4)**
  1. ESTABLISH PERIMETER CONTROLS AND MARK BOUNDARIES FOR SENSITIVE RESOURCE AREAS, SUCH AS WETLANDS AND RIPARIAN BUFFER ZONES.
  2. INSTALL ADDITIONAL SEDIMENT CONTROL MEASURES.
  3. FINAL GRADE ANY REMAINING SIDE SLOPES.
  4. APPLY PERMANENT STABILIZATION MEASURES TO ALL REMAINING EXPOSED SOIL AREAS INCLUDING STAGING/STOCKPILE AREAS.
  5. FINAL GRADE AND STABILIZE ALL EARTH DISTURBANCE AS WORK PROGRESSES.

4. STABILIZATION OF EXPOSED SOILS

- SEED AND MULCH WILL BE USED FOR BOTH PERMANENT AND TEMPORARY STABILIZATION MEASURES. ROLLED EROSION CONTROL PRODUCT (RECP) WILL BE USED IN PLACE OF MULCH FOR SLOPES GREATER THAN 1V:3H (TEMPORARY EROSION MATTING). MULCH IS TO BE APPLIED AT A MINIMUM APPLICATION RATE SHOWN ON THE EPSC DETAIL SHEETS, UNLESS DIRECTED OTHERWISE BY THE ENGINEER.
- DISTURBED AREAS AND SOIL STOCKPILES THAT WILL NOT BE WORKED FOR MORE THAN 7 DAYS SHALL BE TEMPORARILY STABILIZED WITH MULCH/RECP WITHIN 48 HOURS.
- DISTURBED AREAS AND SOIL STOCKPILES THAT WILL NOT BE WORKED FOR MORE THAN 30 DAYS SHALL BE TEMPORARILY STABILIZED WITH SEED AND MULCH/RECP WITHIN 48 HOURS.
- EXPOSED AREAS THAT HAVE ACHIEVED FINAL GRADE SHALL BE PERMANENTLY STABILIZED WITHIN 48 HOURS.
- IN AREAS WHERE VEGETATIVE COVER WILL PROVIDE PERMANENT STABILIZATION, SEEDING TO BE COMPLETED BETWEEN APRIL 15 AND SEPTEMBER 15.
- AREA OF SOIL DISTURBANCE ALLOWED ON THIS PROJECT SHALL BE LESS THAN 5 ACRES AT ANY GIVEN TIME INCLUDING WASTE, BORROW AND STAGING AREAS.
- MAINTAINING VEGETATED BUFFERS ALONG STREAM BANKS, WETLANDS OR OTHER SENSITIVE AREAS IS A CRUCIAL EROSION AND SEDIMENT CONTROL MEASURE THAT SHOULD BE ESTABLISHED WHEREVER POSSIBLE.
- STABILIZED CONSTRUCTION ENTRANCES SHALL BE INSTALLED ANYWHERE EQUIPMENT WILL BE GOING FROM AREAS OF EXPOSED SOILS TO PAVED SURFACES.
- BECAUSE THE PROJECT FALLS UNDER THE CGP 3-9020, BARRIER FENCE SHALL BE USED INSTEAD OF PROJECT DEMARCATION FENCE WITHIN 100 FEET OF RECEIVING WATERS.
- SILT FENCE WILL BE INSTALLED AS PROPOSED ON THE EPSC PLAN OR AS NECESSARY. FIBER ROLLS (EROSION LOGS) MAY BE SUBSTITUTED FOR SILT FENCE WHERE APPROPRIATE DEPENDING ON THE DRAINAGE AREA ABOVE THE INSTALLATION AREA.
- SURFACE ROUGHENING OF ALL EXPOSED SLOPES, COMBINED WITH TEMPORARY MULCHING, SHALL BE UTILIZED ON A REGULAR BASIS.
- THE FORECAST OF RAINFALL EVENTS SHALL TRIGGER IMMEDIATE PROTECTION OF EXPOSED SOILS.
- DIVERSION OF UPLAND RUNOFF IS ANTICIPATED AS NOTED ON THE ATTACHED EPSC PLANS.

5. DRAINAGE AREAS AND DISCHARGE POINTS

THE BRIDGE AND APPROACHES OF THIS PROJECT ARE BEING CONSTRUCTED PARALLEL TO THE EXISTING ALIGNMENT OVER THE NECR RAILROAD AND I-89. THE WESTERLY APPROACH TO THE BRIDGE IS ALONG THE WINOOSKI RIVER.

THE PROJECT HAS TEN DISCRETE STORMWATER DISCHARGE POINTS, NONE OF WHICH OUTLET DIRECTLY INTO THE WINOOSKI RIVER, BUT ALL OF WHICH EVENTUALLY DRAIN TO THE WINOOSKI RIVER AFTER PASSING THROUGH VEGETATED SWALES AND/OR EMBANKMENTS. THE PROJECT HAS BEEN DIVIDED INTO THE FOLLOWING DRAINAGE AREAS:

- **DRAINAGE AREA A1**

  LOCATED NORTH OF THE WINOOSKI RIVER AND WEST OF THE NECR RAILROAD THIS AREA INCLUDES DISTURBANCE OF 0.9 ACRES FOR THE CONSTRUCTION OF A PORTION OF THE WESTERLY ROADWAY APPROACH. RUNOFF WILL FLOW DOWN VEGETATED EMBANKMENTS INTO AN EXISTING VEGETATED SWALE THAT HEADS NORTHWEST BETWEEN ROUTE 2 AND THE NECR RAILROAD. THE SWALE EVENTUALLY PASSES THROUGH AN EXISTING CULVERT UNDER ROUTE 2 INTO AN EXISTING SWALE AND THEN DISCHARGING INTO THE WINOOSKI RIVER. THIS WORK WILL BE DONE DURING PHASES 1, 2 AND 3 OF CONSTRUCTION.
- **DRAINAGE AREA A2**
  LOCATED NORTH OF THE WINOOSKI RIVER, SOUTH OF EXISTING ROUTE 2, AND WEST OF THE NECR RAILROAD THIS AREA INCLUDES DISTURBANCE OF 0.4 ACRES FOR THE CONSTRUCTION OF THE PROPOSED WESTERLY ROADWAY APPROACH EMBANKMENT. RUNOFF WILL FLOW DOWN VEGETATED EMBANKMENTS OR DOWN A STONE DOWNSPOUT AND THROUGH A PROPOSED 60" PIPE UNDER THE APPROACH EMBANKMENT (PIPE #1). IT WILL THEN CONTINUE AS OVERLAND FLOW THROUGH AN EXISTING WOODED AREA TOWARD THE WINOOSKI RIVER. THIS WORK WILL BE DONE DURING PHASES 1 and 2 OF CONSTRUCTION.
- **DRAINAGE AREA A3**
  LOCATED NORTH OF THE WINOOSKI RIVER, SOUTH OF EXISTING ROUTE 2, AND WEST OF THE NECR RAILROAD THIS AREA INCLUDES DISTURBANCE OF 0.9 ACRES FOR THE CONSTRUCTION OF THE PROPOSED WESTERLY ROADWAY APPROACH AND BRIDGE ABUTMENT EMBANKMENTS. RUNOFF WILL FLOW DOWN VEGETATED EMBANKMENTS AND CONTINUE AS OVERLAND FLOW THROUGH EXISTING WOODED AND FIELD AREAS TOWARD THE WINOOSKI RIVER. THIS WORK WILL BE DONE DURING PHASE 1 OF CONSTRUCTION.
- **DRAINAGE AREA A4**
  LOCATED NORTH OF THE NECR RAILROAD AND SOUTH OF I-89 THIS AREA INCLUDES DISTURBANCE OF 0.2 ACRES FOR THE CONSTRUCTION OF PIER #1. RUNOFF WILL FLOW DOWN VEGETATED EMBANKMENTS AND CONTINUE THROUGH AN EXISTING VEGETATED SWALE THAT HEADS SOUTHEAST BETWEEN THE NECR RAILROAD AND I-89. THE SWALE EVENTUALLY PASSES THROUGH AN EXISTING CULVERT UNDER THE NECR RAILROAD DISCHARGING INTO THE WINOOSKI RIVER. THIS WORK WILL BE DONE DURING PHASE 1 OF CONSTRUCTION.
- **DRAINAGE AREA A5**
  LOCATED IN THE EXISTING I-89 MEDIAN THIS AREA INCLUDES DISTURBANCE OF 0.1 ACRES FOR THE CONSTRUCTION OF PIER #2. RUNOFF WILL FLOW DOWN VEGETATED EMBANKMENTS AND CONTINUE THROUGH AN EXISTING VEGETATED SWALE THAT HEADS SOUTHEAST IN THE I-89 MEDIAN. THE SWALE EVENTUALLY DRAINS INTO A DROP INLET AND CONTINUES IN EXISTING PIPES, EVENTUALLY DISCHARGING INTO THE WINOOSKI RIVER. THIS WORK WILL BE DONE DURING PHASE 1 OF CONSTRUCTION.
- **DRAINAGE AREA A6**
  LOCATED NORTHEAST OF I-89 ALONG THE EXISTING ROUTE 2 ALIGNMENT, THIS AREA INCLUDES DISTURBANCE OF 0.4 ACRES FOR THE CONSTRUCTION OF THE PROPOSED EASTERLY ROADWAY APPROACH AND EMBANKMENT. RUNOFF WILL FLOW DOWN VEGETATED EMBANKMENTS INTO A PROPOSED RIPRAP SWALE THAT HEADS NORTHEAST ALONGSIDE ROUTE 2. THE SWALE DRAINS INTO A PROPOSED DROP INLET AND CONTINUES INTO A PROPOSED 24" PIPE UNDER ROUTE 2 (PIPE #2). THE PROPOSED PIPE OUTLETS ONTO A RIPRAP APRON AND THEN CONTINUES AS OVERLAND FLOW THROUGH THE FIELD AREA, EVENTUALLY ENTERING AN EXISTING POND. THE POND OUTLETS THROUGH EXISTING PIPES UNDER I-89 AND THE NECR RAILROAD AND INTO THE WINOOSKI RIVER. THIS WORK WILL BE DONE DURING PHASES 1, 2 AND 3 OF CONSTRUCTION.
- **DRAINAGE AREA A7**
  LOCATED NORTHEAST OF I-89 ALONG THE ROUTE 2 ALIGNMENT, THIS AREA INCLUDES DISTURBANCE OF 1.3 ACRES FOR THE CONSTRUCTION OF THE PROPOSED EASTERLY ROADWAY APPROACH AND EMBANKMENT. RUNOFF WILL SHEET FLOW ACROSS THE PROPOSED ROADWAY PAVEMENT AND WILL THEN SHEET FLOW DOWN VEGETATED EMBANKMENTS INTO AN EXISTING FIELD AREA. RUNOFF WILL CONTINUE AS OVERLAND FLOW THROUGH THE FIELD AREA, EVENTUALLY ENTERING AN EXISTING POND. THE POND OUTLETS THROUGH EXISTING PIPES UNDER I-89 AND THE NECR RAILROAD AND INTO THE WINOOSKI RIVER. THIS WORK WILL BE DONE DURING PHASES 1, 2 AND 3 OF CONSTRUCTION.

- **DRAINAGE AREA A8**
  LOCATED NORTHEAST OF I-89 ALONG THE NORTHERLY SIDE OF THE EXISTING ROUTE 2 ALIGNMENT, THIS AREA INCLUDES DISTURBANCE OF 0.1 ACRES FOR THE CONSTRUCTION OF THE PROPOSED EASTERLY ROADWAY EMBANKMENT AND ROADSIDE DITCHES. RUNOFF WILL FLOW DOWN VEGETATED EMBANKMENTS INTO A PROPOSED RIPRAP SWALE THAT HEADS NORTHEAST ALONGSIDE ROUTE 2. THE SWALE DRAINS INTO A PROPOSED 42" PIPE UNDER ROUTE 2 (PIPE #3). THE PROPOSED PIPE OUTLETS ONTO A RIPRAP APRON AND THEN CONTINUES AS OVERLAND FLOW THROUGH THE FIELD AREA, EVENTUALLY ENTERING AN EXISTING POND. THE POND OUTLETS THROUGH EXISTING PIPES UNDER I-89 AND THE NECR RAILROAD AND INTO THE WINOOSKI RIVER. THIS WORK WILL BE DONE DURING PHASE 2 OF CONSTRUCTION.
- **DRAINAGE AREA A9**
  LOCATED NORTHEAST OF I-89 ALONG THE NORTHERLY SIDE OF THE EXISTING ROUTE 2 ALIGNMENT, THIS AREA INCLUDES DISTURBANCE OF 0.1 ACRES FOR THE CONSTRUCTION OF THE PROPOSED EASTERLY ROADWAY EMBANKMENT AND ROADSIDE DITCHES. RUNOFF WILL FLOW DOWN VEGETATED EMBANKMENTS INTO A PROPOSED RIPRAP SWALE THAT HEADS ALONGSIDE ROUTE 2. THE SWALE DRAINS INTO A PROPOSED 30" PIPE UNDER ROUTE 2 (PIPE #4). THE PROPOSED PIPE OUTLETS ONTO A RIPRAP APRON AND THEN CONTINUES AS OVERLAND FLOW THROUGH THE FIELD AREA, EVENTUALLY ENTERING AN EXISTING POND. THE POND OUTLETS THROUGH EXISTING PIPES UNDER I-89 AND THE NECR RAILROAD AND INTO THE WINOOSKI RIVER. THIS WORK WILL BE DONE DURING PHASE 2 OF CONSTRUCTION.
- **DRAINAGE AREA A10**
  LOCATED NORTHEAST OF I-89 ALONG THE NORTHERLY SIDE OF THE EXISTING ROUTE 2 ALIGNMENT, THIS AREA INCLUDES DISTURBANCE OF LESS THAN 0.1 ACRES FOR THE CONSTRUCTION OF THE PROPOSED EASTERLY ROADWAY EMBANKMENT AND ROADSIDE DITCHES. RUNOFF WILL FLOW DOWN VEGETATED EMBANKMENTS INTO A PROPOSED VEGETATED SWALE THAT HEADS ALONGSIDE ROUTE 2. THE SWALE DRAINS INTO AN EXISTING VEGETATED SWALE WHICH CONTINUES FLOWING EASTERLY ALONG THE NORTHERLY SIDE OF ROUTE 2. THE EXISTING SWALE OUTLETS ONTO AN EXISTING DROP INLET AND THROUGH AN EXISTING PIPE UNDER ROUTE 2. PIPE OUTLETS ONTO A RIPRAP APRON AND THEN CONTINUES AS OVERLAND FLOW THROUGH THE FIELD AREA, EVENTUALLY ENTERING AN EXISTING POND. THE POND OUTLETS THROUGH EXISTING PIPES UNDER I-89 AND THE NECR RAILROAD AND INTO THE WINOOSKI RIVER. THIS WORK WILL BE DONE DURING PHASE 2 OF CONSTRUCTION.
- **DRAINAGE AREA A11**
  LOCATED NORTHEAST OF I-89 ALONG THE ROUTE 2 ALIGNMENT AND EAST OF DRAINAGE AREA A7, THIS AREA INCLUDES DISTURBANCE OF 1.0 ACRES FOR THE CONSTRUCTION OF THE PROPOSED EASTERLY ROADWAY APPROACH AND EMBANKMENT. RUNOFF WILL SHEET FLOW ACROSS THE PROPOSED ROADWAY PAVEMENT AND WILL THEN SHEET FLOW DOWN VEGETATED EMBANKMENTS INTO AN EXISTING FIELD AREA. RUNOFF WILL CONTINUE AS OVERLAND FLOW THROUGH THE FIELD AREA, EVENTUALLY ENTERING AN EXISTING POND. THE POND OUTLETS THROUGH EXISTING PIPES UNDER I-89 AND THE NECR RAILROAD AND INTO THE WINOOSKI RIVER. THIS WORK WILL BE DONE DURING PHASES 1, 2 AND 3 OF CONSTRUCTION.

DRAINAGE AREA SUMMARY

DRAINAGE AREA	TOTAL DISTURBANCE (ACRES)	LIMIT OF CONCURRENT DISTURBANCE (ACRES)	RECEIVING WATER
A1	0.9	5	WINOOSKI RIVER
A2	0.4	5	WINOOSKI RIVER
A3	0.9	5	WINOOSKI RIVER
A4	0.2	5	WINOOSKI RIVER
A5	0.1	5	WINOOSKI RIVER
A6	0.4	5	WINOOSKI RIVER
A7	1.3	5	WINOOSKI RIVER
A8	0.1	5	WINOOSKI RIVER
A9	0.1	5	WINOOSKI RIVER
A10	0.1	5	WINOOSKI RIVER
A11	1.0	5	WINOOSKI RIVER

SEE THE EPSC NARRATIVE AND PLAN SHEETS FOR FURTHER DETAIL REGARDING DRAINAGE AREAS AND RELATED SLOPE AND SOIL ERODIBILITY.

6. WASTE, BORROW, AND STAGING AREAS

- OFF-SITE WASTE AND BORROW AREAS HAVE NOT BEEN IDENTIFIED FOR THIS PROJECT. NOTE THAT THE AREA OF DISTURBANCE NOTED IN SECTION 2 DOES NOT INCLUDE THESE WASTE AND BORROW AREAS. IT IS THE CONTRACTORS RESPONSIBILITY TO VERIFY WHETHER OR NOT THE ADDITIONAL AREA OF DISTURBANCE CAUSED BY THE WASTE/BORROW AREAS REQUIRES ADDITIONAL PERMITTING DUE TO AN INCREASE IN THE RISK TO ENVIRONMENTAL RESOURCES. ALL EROSION PREVENTION AND SEDIMENT CONTROL MEASURES NECESSARY FOR WASTE, BORROW, AND STAGING AREAS OUTSIDE THE PROJECT LIMITS SHALL BE PAID FOR PER 105.29 OF THE STANDARD SPECIFICATIONS FOR CONSTRUCTION.
- IN ADDITION TO THE CONTRACTOR CHECKLIST ANY ACTIVITIES OUTSIDE THE CONSTRUCTION LIMITS SHALL FOLLOW SPECIFICATION 105.25 – 105.29 OF THE STANDARD SPECIFICATIONS FOR CONSTRICTION.
- LOCATE ADDITIONAL AREAS FOR DISPOSAL OF STUMPS, EXCESS SOILS AND COLLECTED SEDIMENT, IF NECESSARY. DISPOSE OF THESE MATERIALS IN A MANNER THAT WILL NOT RESULT IN SEDIMENTS ENTERING WATERS OF THE STATE.
- DISPOSAL SITES REQUIRE RELATIVELY LEVEL TERRAIN WITH AN ISOLATION DISTANCE OF AT LEAST 100 FEET FROM ANY SURFACE WATER, INCLUDING WETLANDS.
- VEHICLE AND EQUIPMENT STORAGE AREAS OR AREAS ADJACENT TO CONSTRUCTION TRAILERS OR OTHER HIGH TRAFFIC AREAS SHALL BE COVERED WITH GEOTEXTILE FABRIC AND 12 INCHES OF GRAVEL. FOLLOWING COMPLETION OF CONSTRUCTION, ALL NON-NATIVE MATERIALS SHALL BE REMOVED FROM THE STAGING AREA. COMPACTED, RUTTED, OR OTHERWISE DISTURBED SOILS SHALL BE TILLED, RAKED, SEEDED AND MULCHED.
- ERODIBLE MATERIALS STOCKPILES WITHIN THE MATERIAL STORAGE AREAS SHALL BE ISOLATED WITH SILT FENCE OR OTHER ACCEPTABLE SEDIMENT BARRIER. SOIL STOCKPILED ON THE SITE SHALL BE SEEDED AND MULCHED.

7. WINTER CONSTRUCTION REQUIREMENTS

GENERALLY, VARIOUS MEASURES SPECIFIC TO WINTER MAY BE NECESSARY SHOULD THE PROJECT EXTEND INTO WINTER (OCTOBER 15 THROUGH APRIL 15). REFER TO THE VERMONT STANDARDS AND SPECIFICATIONS FOR EROSION PREVENTION AND SEDIMENT CONTROL FOR GUIDANCE.

ON THIS SPECIFIC PROJECT IT IS EXPECTED THAT CONSTRUCTION ACTIVITIES WILL CONTINUE INTO THE WINTER CONSTRUCTION SEASON, DEPENDING ON ACTUAL FIELD AND WEATHER CONDITIONS. IF ACTIVITIES ARE ON-GOING BETWEEN OCTOBER 15 AND APRIL 15, THE CONTRACTOR SHALL FOLLOW REQUIREMENTS FOR WINTER CONSTRUCTION, AS DEFINED IN SPECIFIC PERMIT CONDITIONS AND AS FOLLOWS:

- ENLARGED ACCESS POINTS STABILIZED TO PROVIDE FOR SNOW STOCKPILING.
- LIMITS OF DISTURBANCE MOVED OR REPLACED TO REFLECT BOUNDARY OF WINTER WORK.
- DEVELOPMENT OF A SNOW MANAGEMENT PLAN THAT INCLUDES:
  1. ADEQUATE STORAGE AND CONTROL OF MELT-WATER
  2. STORAGE OF CLEARED SNOW TO BE PLACED DOWN SLOPE OF DISTURBED AREAS AND OUT OF STORMWATER TREATMENT STRUCTURES.
- A MINIMUM 25 FOOT BUFFER SHALL BE MAINTAINED FROM PERIMETER CONTROLS.
- DRAINAGE STRUCTURES MUST BE KEPT OPEN AND FREE OF SNOW AND ICE DAMS.
- SILT FENCE AND OTHER PRACTICES REQUIRING EARTH DISTURBANCE MUST BE INSTALLED AHEAD OF FROZEN GROUND.
- MULCH TO BE APPLIED AT TWICE THE REGULAR RATE UNLESS DIRECTED OTHERWISE BY THE ENGINEER.
- AREAS OF DISTURBED SOIL MUST BE STABILIZED AT THE END OF EACH WORK DAY, WITH THE FOLLOWING EXCEPTIONS:
  1. IF NO PRECIPITATION WITHIN 24 HOURS IS FORECAST AND WORK WILL RESUME IN THE SAME AREA WITHIN 24 HOURS
  2. DISTURBED AREAS THAT COLLECT AND RETAIN RUNOFF, SUCH AS OPEN UTILITY TRENCHES, MUST BE STABILIZED AT THE END OF EACH WORK WEEK.
- PRIOR TO STABILIZATION, SNOW OR ICE MUST BE REMOVED TO LESS THAN 1" THICKNESS

CONTRACTOR RESPONSIBILITIES, LIMITATIONS & PROHIBITIONS

1. GENERAL NOTES

- IT SHALL BE THE RESPONSIBILITY OF THE CONTRACTOR TO AMEND/UPDATE ALL PLANS AND EXISTING PERMIT WHEN ADDING DETAILED CONSTRUCTION PHASING OR ANYTHING ELSE THAT MAY DEVIATE FROM THE APPROVED PLANS AS DIRECTED BY THE ENGINEER.
- OTHER THAN THOSE SHOWN ON THE PLANS ALL LAND DISTURBANCES WITHIN 50 FEET OF ALL WATER BODIES, MEASURED FROM THE TOP OF BANK, AND WETLANDS, ARE PROHIBITED WITHOUT FURTHER REGULATORY REVIEW.
- CONTRACTOR TO MAINTAIN ALL EXISTING STREAMS AND RIPARIAN BUFFER ZONES IN THEIR NATURAL CONDITION.
- OFF-SITE DISCHARGES OF ANY MATERIAL OTHER THAN STORMWATER, SUCH AS VEHICLE AND EQUIPMENT MAINTENANCE SPILLS, FUELS, WASH WATER, CONSTRUCTION DEBRIS, OIL, WET CONCRETE (INCLUDING WASHOUT FROM CONCRETE BATCH TRUCKS OR EQUIPMENT USED TO MIX CONCRETE), AND OTHER SUBSTANCES, ARE PROHIBITED.
- THE FAILURE TO PROMPTLY ABATE THE DISCHARGE OF SEDIMENT OR ANY OTHER WASTE WHICH CAUSES A VISIBLE DISCOLORATION OF SURFACE WATERS (INCLUDING WETLANDS), OR IS FOUND TO BE VIOLATING WATER QUALITY STANDARDS BASED ON MONITORING, IS PROHIBITED. ANY CORRECTIVE ACTION UNDERTAKEN TO REMOVE SEDIMENT FROM A WETLAND IS ALSO PROHIBITED.
- WEATHER CONDITIONS WILL BE MONITORED DURING THE CONSTRUCTION SEASON. IF AN EXTENDED RAIN PERIOD OR HEAVY RAIN IS PREDICTED, EXPOSED SOIL AREAS WILL BE MULCHED PRIOR TO AND DAILY DURING THE RAIN EVENT. IF DETERMINED NECESSARY BY THE ENGINEER, WORK MAY BE SUSPENDED OR LIMITED DURING THE STORM.

2. EPSC PLAN

THE CONTRACTOR SHALL SUBMIT AN EPSC PLAN IN ACCORDANCE WITH THE "EPSC PLAN" ITEM, THE ATTACHED EPSC PLANS AND PROJECT PERMITS. THE PLAN AT A MINIMUM SHALL TAKE INTO CONSIDERATION THE FOLLOWING:

- PROJECT WIDE
  - THE DISTURBANCE ON THE ENTIRE PROJECT AT ANY ONE TIME SHALL BE LIMITIED TO 5 ACRES.
  - ACCESS TO THE AREA, INCLUDING TEMPORARY AND PERMANENT STABILIZATION OF THE PROPOSED ACCESS DURING AND THEN FOLLOWING CONSTRUCTION OF THE PROJECT
  - STORMWATER RUNOFF TO BE CONTROLLED PRIOR TO, DURING, AND THEN FOLLOWING THE COMPLETION OF CONSTRUCTION OF THE TEMPORARY ROADWAY, BRIDGE SUPERSTRUCTURE, BRIDGE ABUTMENTS/PIERS, RETAINING WALLS, GRASS SWALE, AND PERMANENT ROADWAY, AS WELL AS THE REMOVAL OF THE EXISTING ROADWAY AND BRIDGE (INCLUDING ABUTMENTS/PIERS).
- DRAINAGE AREA 2
  - EXISTING STORMWATER TO BE DIVERTED AROUND THE PROPOSED 60" RCP DURING INSTALLATION.
- DRAINAGE AREA 3
  - EXISTING STORMWATER TO BE DIVERTED AROUND THE PROPOSED 60" RCP DURING INSTALLATION.
- DRAINAGE AREA 6
  - 24" PIPE AND STONE FILL SWALE TO BE INSTALLED DURING DRY CONDITIONS. EXISTING 18" PIPE TO BE MAINTAINED TO TRANSMIT STORMWATER DURING INSTALLATION OF NEW 24" PIPE.
- DRAINAGE AREA 7
  - 24" PIPE TO BE INSTALLED DURING DRY CONDITIONS. EXISTING 18" PIPE TO BE MAINTAINED TO TRANSMIT STORMWATER DURING INSTALLATION OF NEW 24" PIPE.
  - THE STORM WATER RUNOFF CREDIT AREA
- DRAINAGE AREA 8
  - STORMWATER RUNOFF TO BE CONTROLLED PRIOR TO, DURING, AND THEN FOLLOWING THE COMPLETION OF CONSTRUCTION OF THE TEMPORARY ROADWAY, THE PERMANENT ROADWAY, AND REMOVAL OF THE EXISTING ROADWAY.
  - 42" PIPE AND STONE FILL SWALE TO BE INSTALLED DURING DRY CONDITIONS. EXISTING 42" PIPE TO BE MAINTAINED TO TRANSMIT STORMWATER DURING INSTALLATION OF NEW 42" PIPE.
- DRAINAGE AREA 9
  - 30" PIPE AND STONE FILL SWALE TO BE INSTALLED DURING DRY CONDITIONS. EXISTING 24" PIPE TO BE MAINTAINED TO TRANSMIT STORMWATER DURING INSTALLATION OF NEW 30" PIPE.
- DRAINAGE AREA 11
  - 42" PIPE AND 30" PIPE TO BE INSTALLED DURING DRY CONDITIONS. EXISTING 24" AND 42" PIPES TO BE MAINTAINED TO TRANSMIT STORMWATER DURING INSTALLATION OF NEW 30" AND 42" PIPES.
  - THE STORM WATER RUNOFF CREDIT AREA

THE EPSC PLAN SHALL ALSO INCLUDE INFORMATION REGARDING:

- THE CONSTRUCTION OF STONE PADS
- CONSTRUCTION OF HAUL ROADS
- CONSTRUCTION OF TEMPORARY FILL
- STABILIZATION OF OPERATIONAL STORMWATER TREATMENT PRACTICES PRIOR TO DIRECTING RUNOFF TO THEM

3. INSPECTION & MONITORING NOTES

- CONTRACTOR SHALL CONDUCT INSPECTIONS AND MONITORING IN ACCORDANCE WITH THE SPECIAL PROVISIONS AND PERMIT SPECIFIC REQUIREMENTS.
- THE CONTRACTOR SHALL KEEP TWO (2) TURBIDITY MONITORS ONSITE AND HAVE PERSONNEL ON HAND THAT ARE TRAINED IN THEIR OPERATION.

SOIL CLASSIFICATION

WAITSFIELD SILT LOAM
0 TO 3% SLOPES
"K FACTOR" 0.32
LOW ERODIBILITY

SOIL CLASSIFICATION

SALMON VERY FINE SANDY LOAM
25 TO 50% SLOPES
"K FACTOR" 0.49
HIGH ERODIBILITY

SOIL CLASSIFICATION

SUNDAY FINE SAND
0 TO 3% SLOPES
"K FACTOR" 0.32
LOW ERODIBILITY

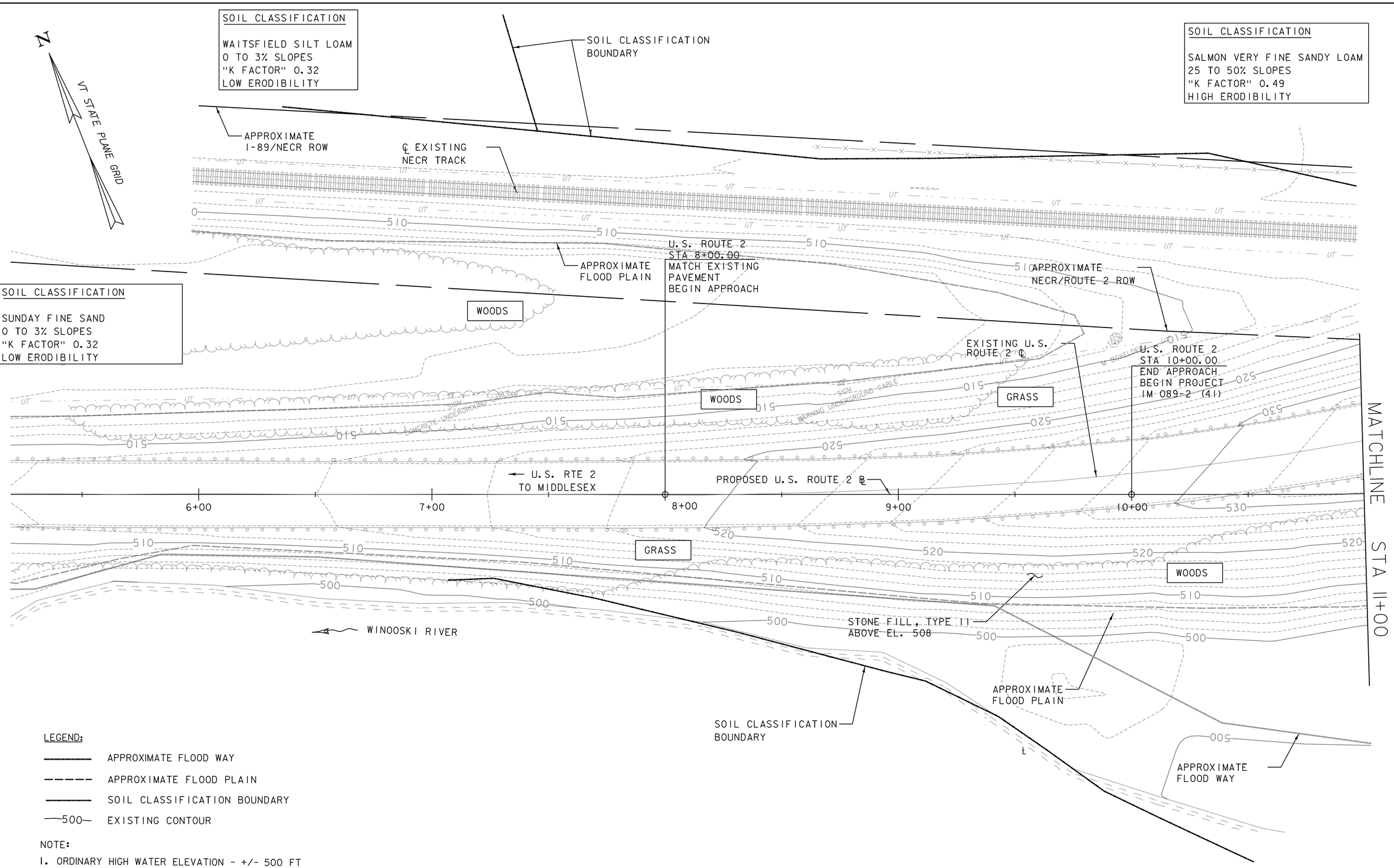

LEGEND:

- APPROXIMATE FLOOD WAY
- APPROXIMATE FLOOD PLAIN
- SOIL CLASSIFICATION BOUNDARY
- —500— EXISTING CONTOUR

NOTE:

1. ORDINARY HIGH WATER ELEVATION - +/- 500 FT
2. THIS SHEET FOR EROSION PRVENTION AND SEDIMENT CONTROL ONLY

DATUM	
VERTICAL	NAVD 88
HORIZONTAL	NAD 83(96)
ADJUSTMENT	COMPASS

SCALE 1" = 20'-0"
20 0 20

PROJECT NAME:	MIDDLESEX
PROJECT NUMBER:	IM 089-2(41)

FILE NAME: z07a052bdr_ece01.dgn	PLOT DATE: 1/3/2015
PROJECT LEADER: R. HEBERT	DRAWN BY: D. BRYANT
DESIGNED BY: D. BRYANT	CHECKED BY: D. BURHANS
EPSC EXISTING CONDITIONS SITE PLAN - 1	SHEET 136 OF 154

N

VT STATE PLANE(SPRUD)

GRASS

I-89 SB
TO MONTPELIER

SOIL CLASSIFICATION

SALMON VERY FINE SANDY LOAM
25 TO 50% SLOPES
"K FACTOR" 0.49
HIGH ERODIBILITY

BEDROCK

APPROXIMATE LOCATION
OF EXISTING TELEPHONE
ON BRIDGE (ABANDONED)

APPROXIMATE
I-89/NECR ROW

APPROXIMATE
NECR/ROUTE 2 ROW

WOODS

EXISTING U.S.
ROUTE 2 BRIDGE

STONE FILL
TYPE II

℄ EXISTING
NECR TRACK

EXISTING U.S.
ROUTE 2 ℄

PROPOSED
U.S. ROUTE 2 ℄

STA. 11+00

MATCHLINE

MATCHLINE

STA. 16+50

GRASS

BEDROCK

GRASS

WOODS

WOODS

12+00

13+00

14+00

15+00

16+00

SOIL CLASSIFICATION

SUNDAY FINE SAND
0 TO 3% SLOPES
"K FACTOR" 0.32
LOW ERODIBILITY

SOIL CLASSIFICATION
BOUNDARY

APPROXIMATE
FLOOD WAY

GRASS

APPROXIMATE
FLOOD PLAIN

APPROXIMATE
ROUTE 2 ROW

SOIL CLASSIFICATION
BOUNDARY

SCALE 1" = 20'-0"
20 0 20

NOTE:

SEE LEGEND AND NOTES ON EPSC EXISTING
CONDITIONS SITE PLAN 1 OF 5

DATUM	
VERTICAL	NAVD 88
HORIZONTAL	NAD 83(96)
ADJUSTMENT	COMPASS

PROJECT NAME: MIDDLESEX
PROJECT NUMBER: IM 089-2(41)

FILE NAME: z07a052bdr_ece02.dgn
PROJECT LEADER: R. HEBERT
DESIGNED BY: D. BRYANT
EPSC EXISTING CONDITIONS SITE PLAN - 2

PLOT DATE: 1/3/2015
DRAWN BY: D. BRYANT
CHECKED BY: D. BURHANS
SHEET 137 OF 154

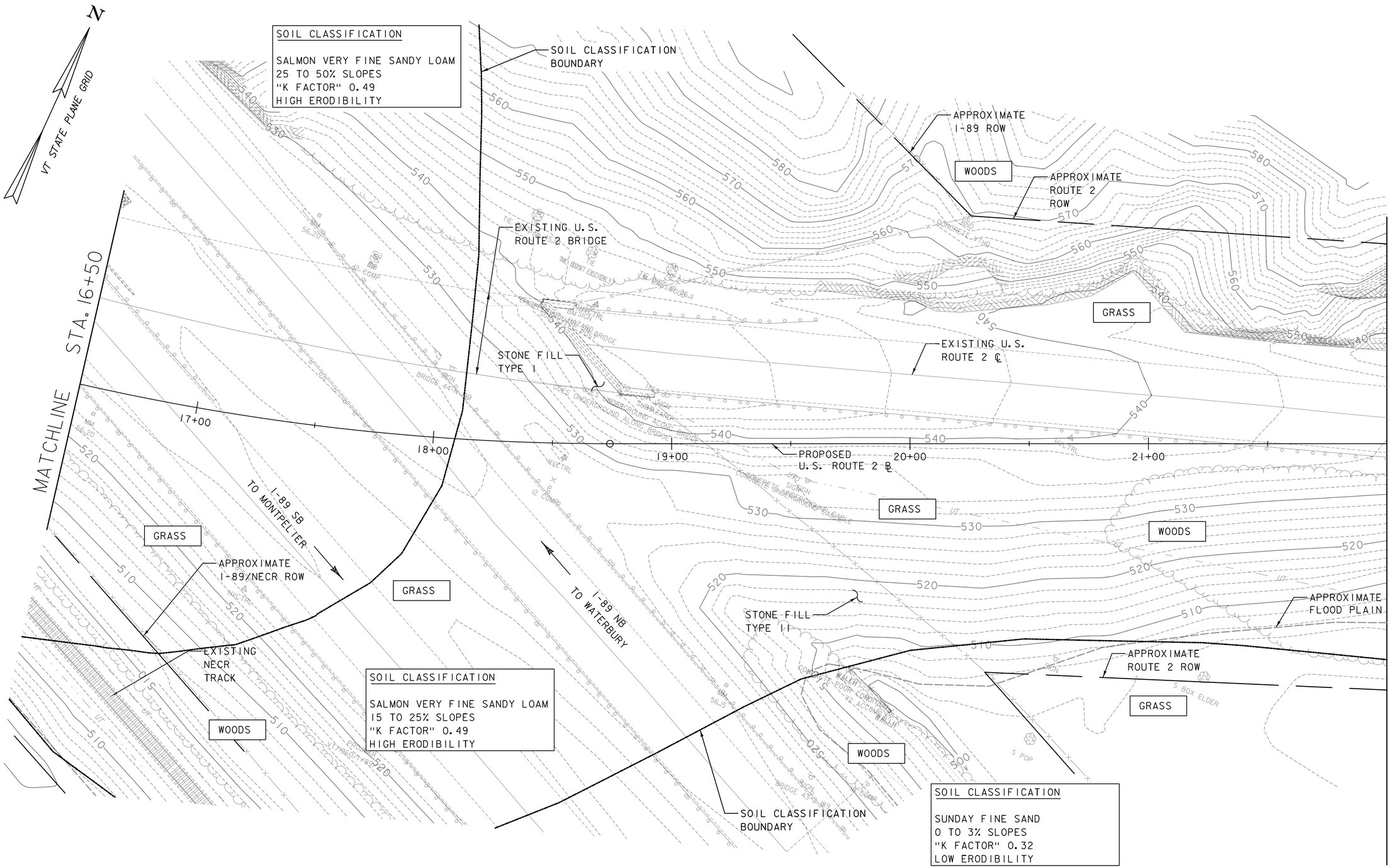

NOTE:

SEE LEGEND AND NOTES ON EPSC EXISTING CONDITIONS SITE PLAN 1 OF 5

SCALE 1" = 20'-0"
20 0 20

DATUM	
VERTICAL	NAVD 88
HORIZONTAL	NAD 83(96)
ADJUSTMENT	COMPASS

PROJECT NAME: MIDDLESEX
PROJECT NUMBER: IM 089-2(41)

FILE NAME: z07a052bdr_ece03.dgn
PROJECT LEADER: R. HEBERT
DESIGNED BY: D. BRYANT
EPSC EXISTING CONDITIONS SITE PLAN - 3

PLOT DATE: 1/3/2015
DRAWN BY: D. BRYANT
CHECKED BY: D. BURHANS
SHEET 138 OF 154

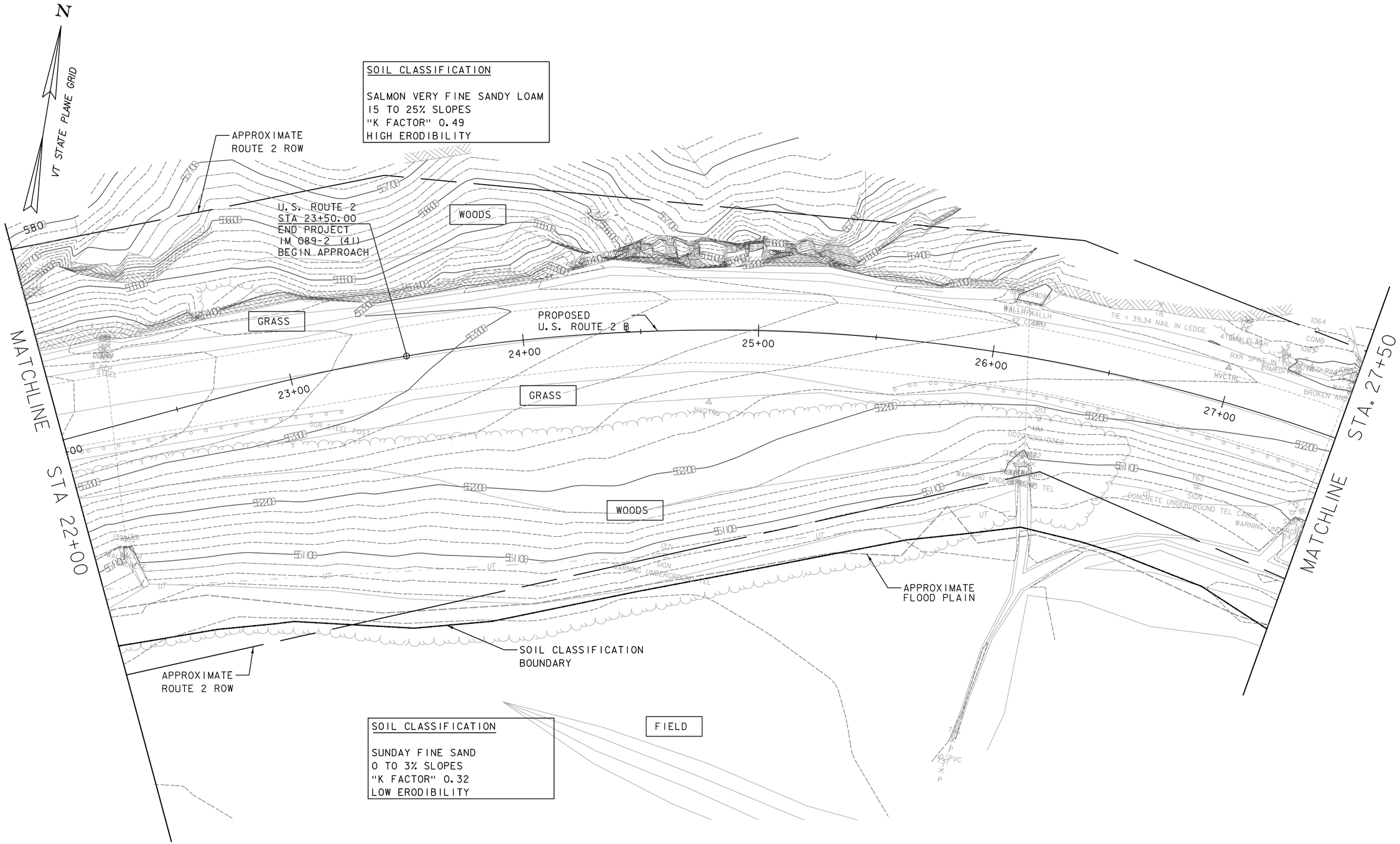

DATUM	
VERTICAL	NAVD 88
HORIZONTAL	NAD 83(96)
ADJUSTMENT	COMPASS

SCALE 1" = 20'-0"
20 0 20

PROJECT NAME:	MIDDLESEX
PROJECT NUMBER:	IM 089-2(41)

FILE NAME: z07a052bdr_ece04.dgn	PLOT DATE: 1/3/2015
PROJECT LEADER: R. HEBERT	DRAWN BY: D. BRYANT
DESIGNED BY: D. BRYANT	CHECKED BY: D. BURHANS
EPSC EXISTING CONDITIONS SITE PLAN - 4	SHEET 139 OF 154

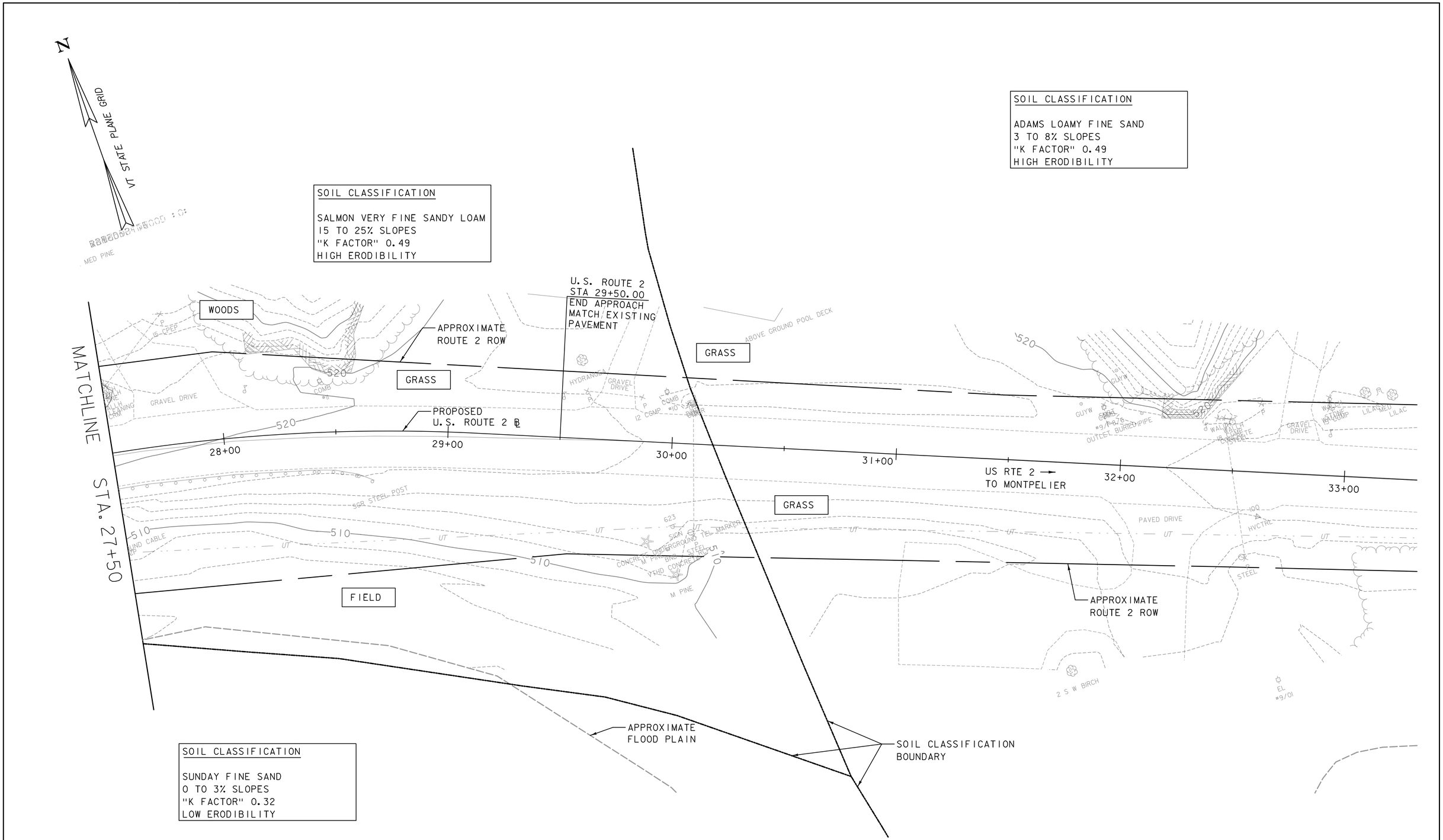

DATUM	
VERTICAL	NAVD 88
HORIZONTAL	NAD 83(96)
ADJUSTMENT	COMPASS

SCALE 1" = 20'-0"
20 0 20

PROJECT NAME: MIDDLESEX
PROJECT NUMBER: IM 089-2(41)

FILE NAME: z07a052bdr_ece05.dgn
PROJECT LEADER: R. HEBERT
DESIGNED BY: D. BRYANT
EPSC EXISTING CONDITIONS SITE PLAN - 5

PLOT DATE: 1/3/2015
DRAWN BY: D. BRYANT
CHECKED BY: D. BURHANS
SHEET 140 OF 154

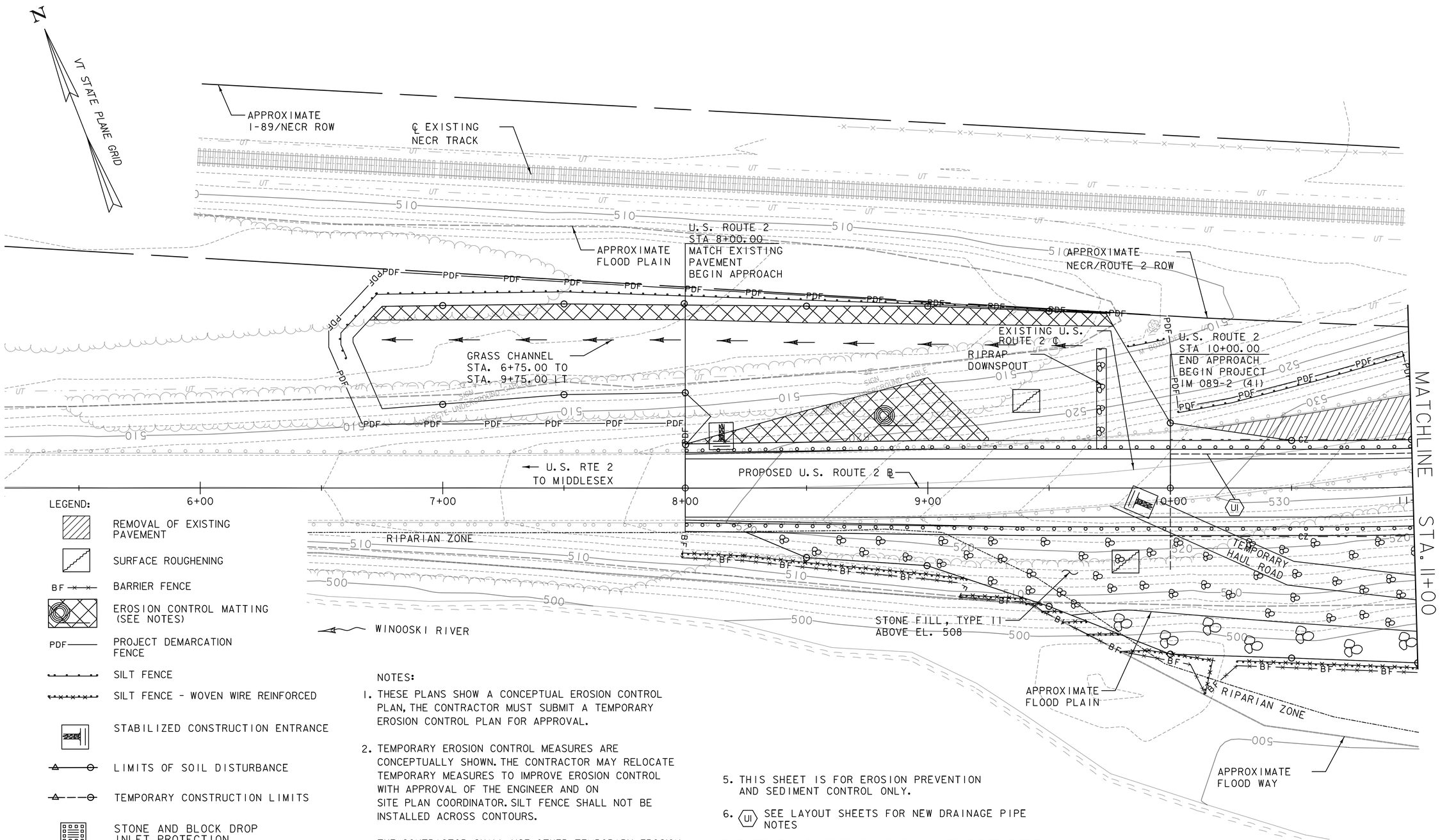

LEGEND:

- REMOVAL OF EXISTING PAVEMENT
- SURFACE ROUGHENING
- BF — BARRIER FENCE
- EROSION CONTROL MATTING (SEE NOTES)
- PDF — PROJECT DEMARCATION FENCE
- SILT FENCE
- SILT FENCE - WOVEN WIRE REINFORCED
- STABILIZED CONSTRUCTION ENTRANCE
- LIMITS OF SOIL DISTURBANCE
- TEMPORARY CONSTRUCTION LIMITS
- STONE AND BLOCK DROP INLET PROTECTION
- PIPE INLET PROTECTION
- TEMPORARY SHEETING AND BRACING

NOTES:

1. THESE PLANS SHOW A CONCEPTUAL EROSION CONTROL PLAN, THE CONTRACTOR MUST SUBMIT A TEMPORARY EROSION CONTROL PLAN FOR APPROVAL.
2. TEMPORARY EROSION CONTROL MEASURES ARE CONCEPTUALLY SHOWN. THE CONTRACTOR MAY RELOCATE TEMPORARY MEASURES TO IMPROVE EROSION CONTROL WITH APPROVAL OF THE ENGINEER AND ON SITE PLAN COORDINATOR. SILT FENCE SHALL NOT BE INSTALLED ACROSS CONTOURS.
3. THE CONTRACTOR SHALL USE OTHER TEMPORARY EROSION CONTROL MEASURES AS NECESSITATED BY THE SEQUENCE OF CONSTRUCTION OR AS DIRECTED BY THE ENGINEER AND ON SITE PLAN COORDINATOR.
4. REFER TO TEMPORARY EROSION CONTROL DETAIL SHEETS FOR ADDITIONAL DETAILS.
5. THIS SHEET IS FOR EROSION PREVENTION AND SEDIMENT CONTROL ONLY.
6. (UI) SEE LAYOUT SHEETS FOR NEW DRAINAGE PIPE NOTES
7. FIBER ROLLS (EROSION LOGS) MAY BE SUBSTITUTED FOR SILT FENCE WHERE APPROPRIATE DEPENDING ON THE DRAINAGE AREA ABOVE THE INSTALLATION AREA. FOR THE PURPOSES OF THE CONSTRUCTION QUANTITY ESTIMATE HALF OF THE REQUIRED LENGTH HAS BEEN ASSUMED TO BE SILT FENCE AND THE OTHER HALF HAS BEEN ASSUMED TO BE FIBER ROLLS.

SCALE 1" = 20'-0"
20 0 20

DATUM	
VERTICAL	NAVD 88
HORIZONTAL	NAD 83(96)
ADJUSTMENT	COMPASS

PROJECT NAME: MIDDLESEX
PROJECT NUMBER: IM 089-2(41)

FILE NAME: z07a052bdr_ect01.dgn
PROJECT LEADER: R. HEBERT
DESIGNED BY: D. BRYANT
EPSC CONSTRUCTION SITE PLAN - 1

PLOT DATE: 1/3/2015
DRAWN BY: D. BRYANT
CHECKED BY: D. BURHANS
SHEET 141 OF 154

NOTES:

1. SEE NOTES AND LEGEND ON EPSC CONSTRUCTION SITE PLAN 1OF 5
2. SEE LAYOUT SHEETS FOR NEW DRAINAGE PIPE NOTES. DURING INSTALLATION OF PIPE (1) CONTRACTOR SHALL DIVERT EXISTING CHANNEL AROUND PROPOSED PIPE LOCATION USING A TEMPORARY DITCH USING ROLLED EROSION CONTROL PRODUCT (RECP).
3. SEE TRAFFIC CONTROL NOTES FOR ADDITIONAL INFORMATION.

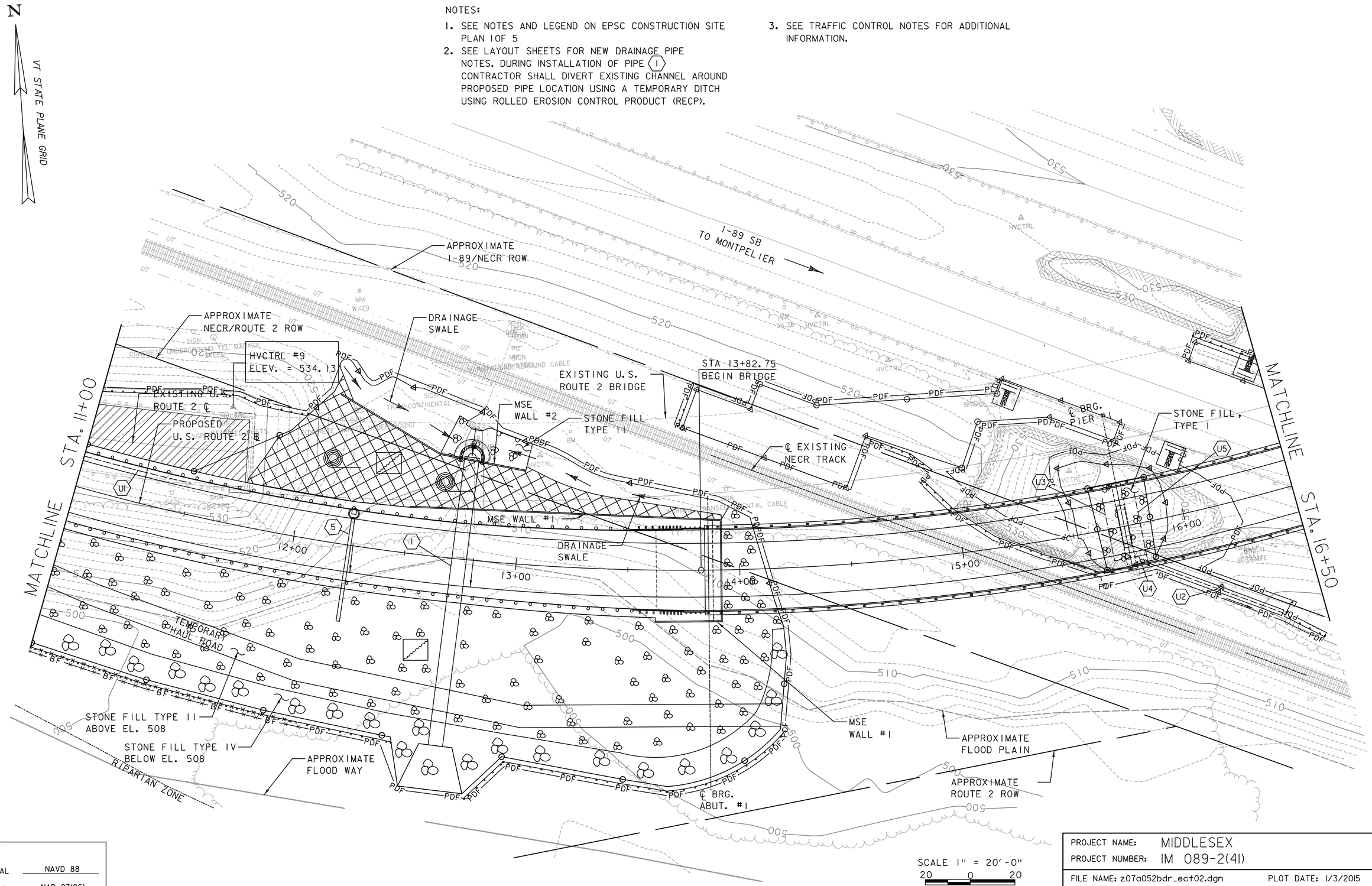

DATUM	
VERTICAL	NAVD 88
HORIZONTAL	NAD 83(96)
ADJUSTMENT	COMPASS

PROJECT NAME: MIDDLESEX
PROJECT NUMBER: IM 089-2(41)

FILE NAME: z07a052bdr_ect02.dgn
PROJECT LEADER: R. HEBERT
DESIGNED BY: D. BRYANT
EPSC CONSTRUCTION SITE PLAN - 2

PLOT DATE: 1/3/2015
DRAWN BY: D. BRYANT
CHECKED BY: D. BURHANS
SHEET 142 OF 154

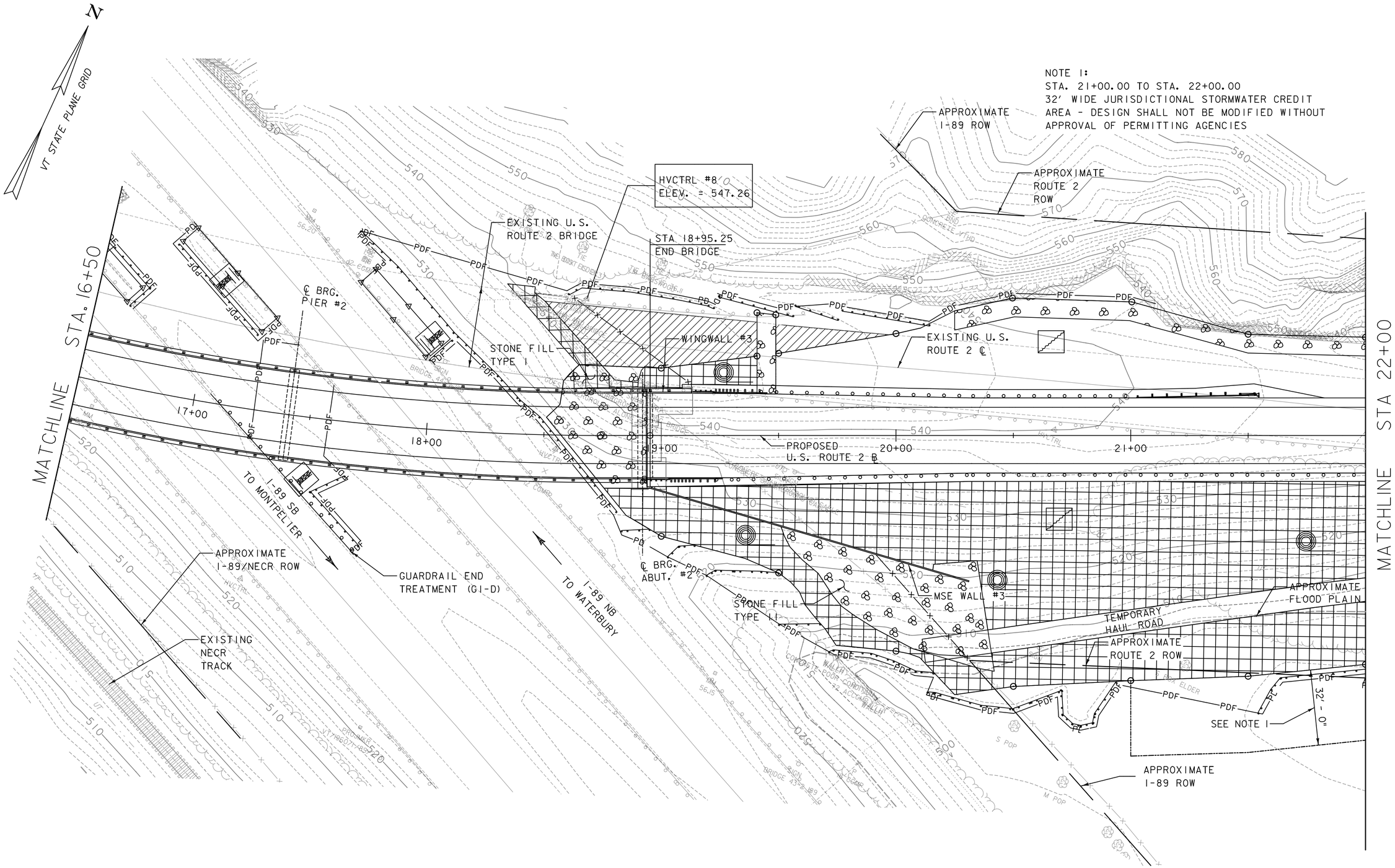

DATUM	
VERTICAL	NAVD 88
HORIZONTAL	NAD 83(96)
ADJUSTMENT	COMPASS

NOTES:

1. SEE NOTES AND LEGEND ON EPSC CONSTRUCTION SITE PLAN 1 OF 5

SCALE 1" = 20'-0"
20 0 20

PROJECT NAME: MIDDLESEX
PROJECT NUMBER: IM 089-2(41)

FILE NAME: z07a052bdr_ect03.dgn	PLOT DATE: 1/3/2015
PROJECT LEADER: R. HEBERT	DRAWN BY: D. BRYANT
DESIGNED BY: D. BRYANT	CHECKED BY: D. BURHANS
EPSC CONSTRUCTION SITE PLAN - 3	SHEET 143 OF 154

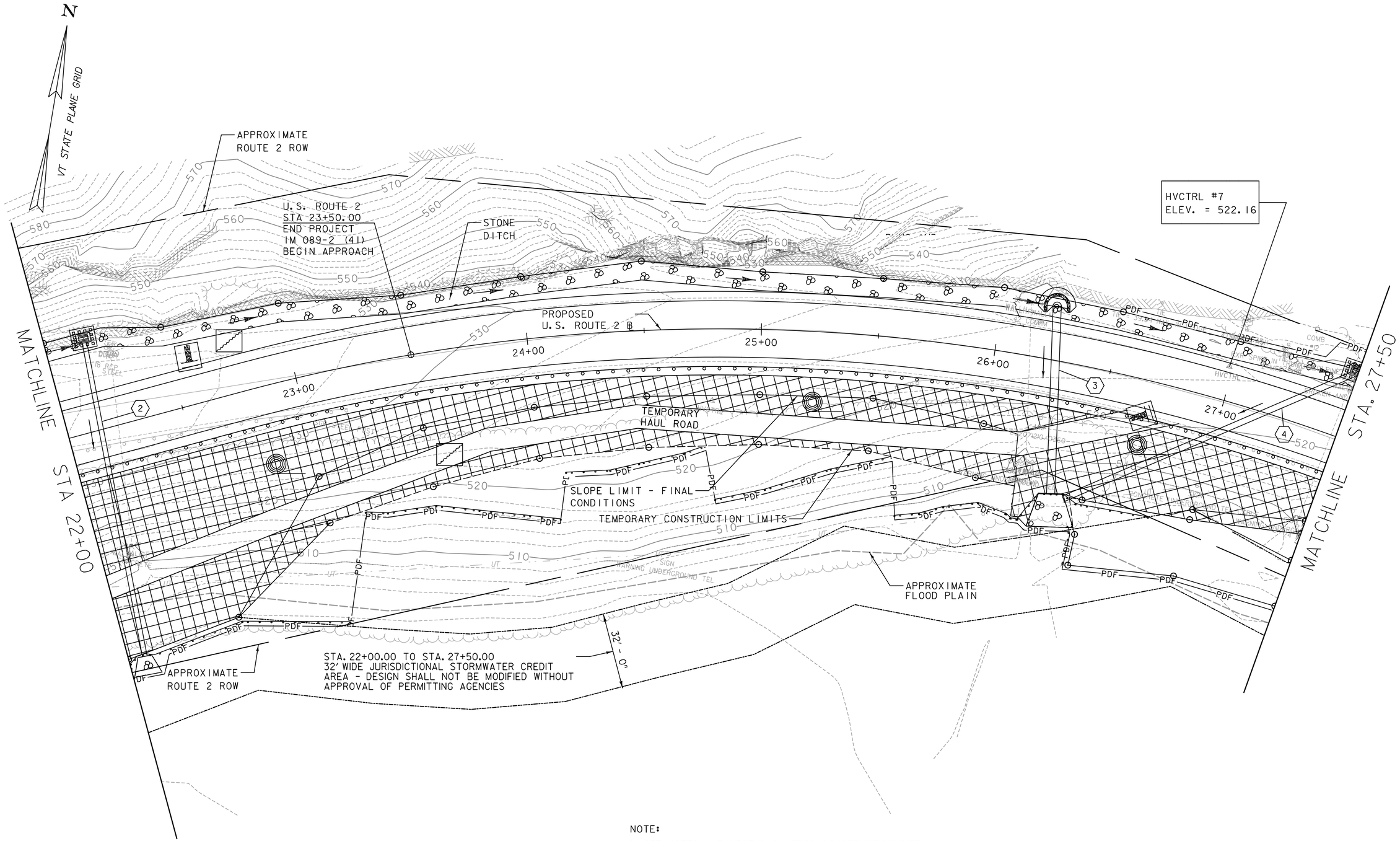

NOTE:

1. SEE NOTES AND LEGEND ON EPSC CONSTRUCTION SITE PLAN 1 OF 5

SCALE 1" = 20'-0"
20 0 20

DATUM	
VERTICAL	NAVD 88
HORIZONTAL	NAD 83(96)
ADJUSTMENT	COMPASS

PROJECT NAME: MIDDLESEX
PROJECT NUMBER: IM 089-2(41)

FILE NAME: z07a052bdr_ect04.dgn	PLOT DATE: 1/3/2015
PROJECT LEADER: R. HEBERT	DRAWN BY: D. BRYANT
DESIGNED BY: D. BRYANT	CHECKED BY: D. BURHANS
EPSC CONSTRUCTION SITE PLAN - 4	SHEET 144 OF 154

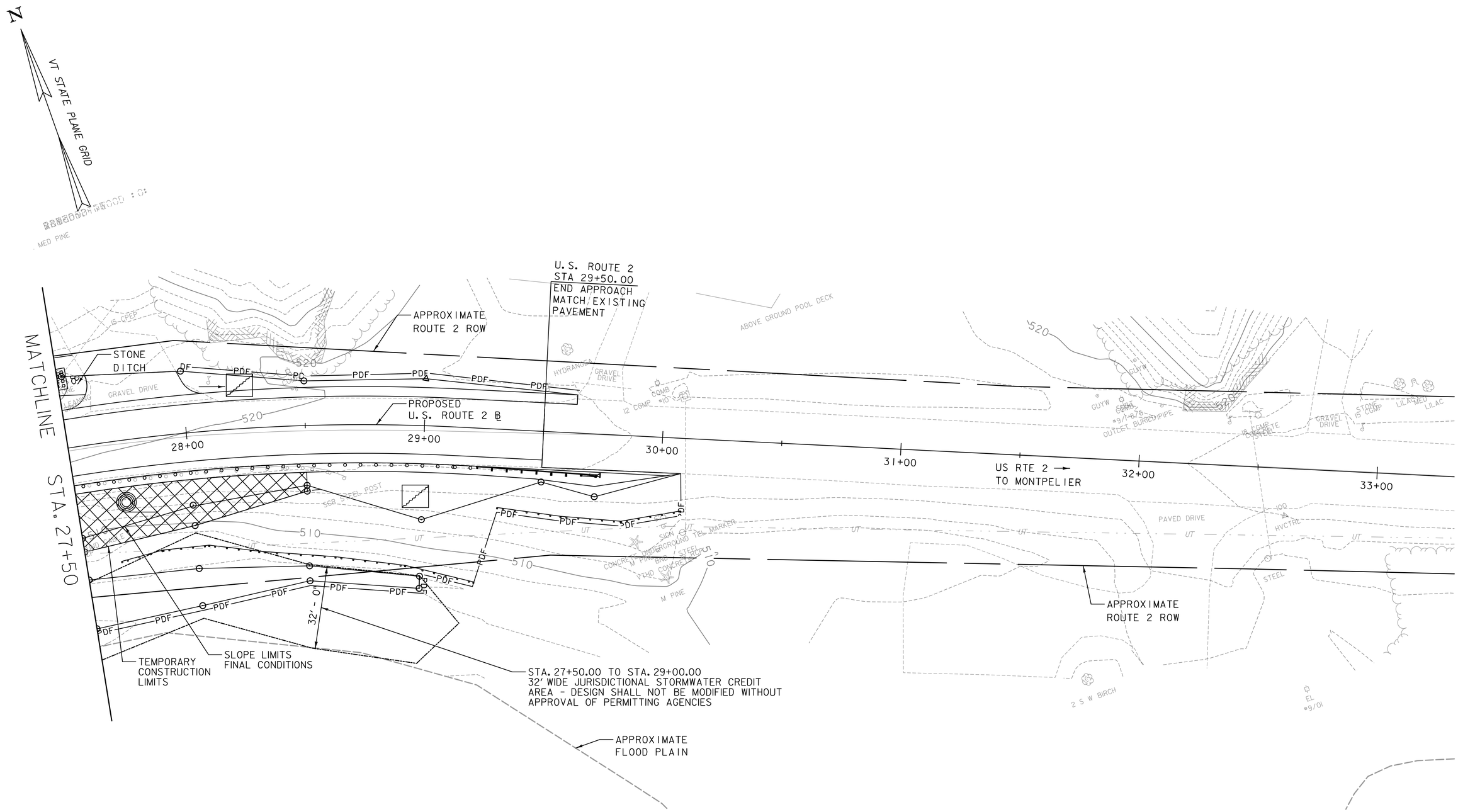

DATUM	
VERTICAL	NAVD 88
HORIZONTAL	NAD 83(96)
ADJUSTMENT	COMPASS

NOTES:

1. SEE NOTES AND LEGEND ON EPSC CONSTRUCTION SITE PLAN 1 OF 5

SCALE 1" = 20'-0"
20 0 20

PROJECT NAME:	MIDDLESEX
PROJECT NUMBER:	IM 089-2(41)

FILE NAME: z07a052bdr_ect05.dgn	PLOT DATE: 1/3/2015
PROJECT LEADER: R. HEBERT	DRAWN BY: D. BRYANT
DESIGNED BY: D. BRYANT	CHECKED BY: D. BURHANS
EPSC CONSTRUCTION SITE PLAN - 5	SHEET 145 OF 154

N
VT STATE PLANE GRID

APPROXIMATE
I-89/NECR ROW

℄ EXISTING
NECR TRACK

U.S. ROUTE 2
STA 8+00.00
MATCH EXISTING
PAVEMENT
BEGIN APPROACH

APPROXIMATE
FLOOD PLAIN

APPROXIMATE
NECR/ROUTE 2 ROW

EXISTING U.S.
ROUTE 2 ℄

U.S. ROUTE 2
STA 10+00.00
END APPROACH
BEGIN PROJECT
IM 089-2 (41)

MATCHLINE
STA. 11+00

← U.S. RTE 2
TO MIDDLESEX

PROPOSED U.S. ROUTE 2 ℄

6+00
7+00
8+00
9+00
10+00

UI

WINOOSKI RIVER

STONE FILL, TYPE II
ABOVE EL. 508

APPROXIMATE
FLOOD PLAIN

STONE FILL, TYPE IV
BELOW EL. 508

APPROXIMATE
FLOOD WAY

LEGEND:

DISTURBED AREAS REQUIRING
RE-VEGETATION

STONE FILL, TYPE I, 1' DEEP (DITCH/OUTLET PAD)
TYPE II, 2' DEEP (SLOPE PROTECTION)
TYPE IV, 4' DEEP (DITCH/SLOPE PROTECTION)

NOTES:
1. CONTOURS REFLECT EXISTING CONDITIONS FINAL CONTOURS WILL BE SIMILAR. SEE CROSS SECTION SHEETS FOR FINAL GRADES.
2. THIS SHEET IS FOR EROSION PREVENTION AND SEDIMENT CONTROL ONLY.
3. (#) SEE LAYOUT SHEETS FOR NEW DRAINAGE PIPE NOTES

SCALE 1" = 20'-0"
20 0 20

DATUM	
VERTICAL	NAVD 88
HORIZONTAL	NAD 83(96)
ADJUSTMENT	COMPASS

PROJECT NAME: MIDDLESEX
PROJECT NUMBER: IM 089-2(41)

FILE NAME: z07a052bdr_ecf01.dgn
PROJECT LEADER: R. HEBERT
DESIGNED BY: D. BRYANT
EPSC FINAL CONDITIONS SITE PLAN - 1

PLOT DATE: 1/3/2015
DRAWN BY: D. BRYANT
CHECKED BY: D. BURHANS
SHEET 146 OF 154

N

VT STATE PLANE GRID

I-89 SB
TO MONTPELIER

APPROXIMATE
I-89/NECR ROW

APPROXIMATE
NECR/ROUTE 2 ROW

EXISTING U.S.
ROUTE 2 ℄

PROPOSED
U.S. ROUTE 2 ℄

STA. 11+00

MATCHLINE

STONE FILL
TYPE II

EXISTING U.S.
ROUTE 2 BRIDGE

STA 13+82.75
BEGIN BRIDGE

℄ EXISTING
NECR TRACK

STONE FILL,
TYPE I

MATCHLINE

STA. 16+50

12+00

13+00

14+00

15+00

16+00

STONE FILL TYPE II
ABOVE EL. 508

STONE FILL TYPE IV
BELOW EL. 508

APPROXIMATE
FLOOD WAY

APPROXIMATE
FLOOD PLAIN

APPROXIMATE
ROUTE 2 ROW

DATUM	
VERTICAL	NAVD 88
HORIZONTAL	NAD 83(96)
ADJUSTMENT	COMPASS

NOTES:

1. SEE NOTES AND LEGEND ON EPSC FINAL CONDITIONS SITE PLAN 1 OF 5
2. (#) SEE LAYOUT SHEETS FOR NEW DRAINAGE PIPE NOTES

SCALE 1" = 20'-0"
20 0 20

PROJECT NAME: MIDDLESEX	
PROJECT NUMBER: IM 089-2(41)	
FILE NAME: z07a052bdr_ecf02.dgn	PLOT DATE: 1/3/2015
PROJECT LEADER: R. HEBERT	DRAWN BY: D. BRYANT
DESIGNED BY: D. BRYANT	CHECKED BY: D. BURHANS
EPSC FINAL CONDITIONS SITE PLAN - 2	SHEET 147 OF 154

NOTES:
1. SEE NOTES AND LEGEND ON EPSC FINAL CONDITIONS SITE PLAN 1 OF 5
2. STA. 21+00.00 TO STA. 22+00.00 32' WIDE JURISDICTIONAL STORMWATER CREDIT AREA - DESIGN SHALL NOT BE MODIFIED WITHOUT APPROVAL OF PERMITTING AGENCIES

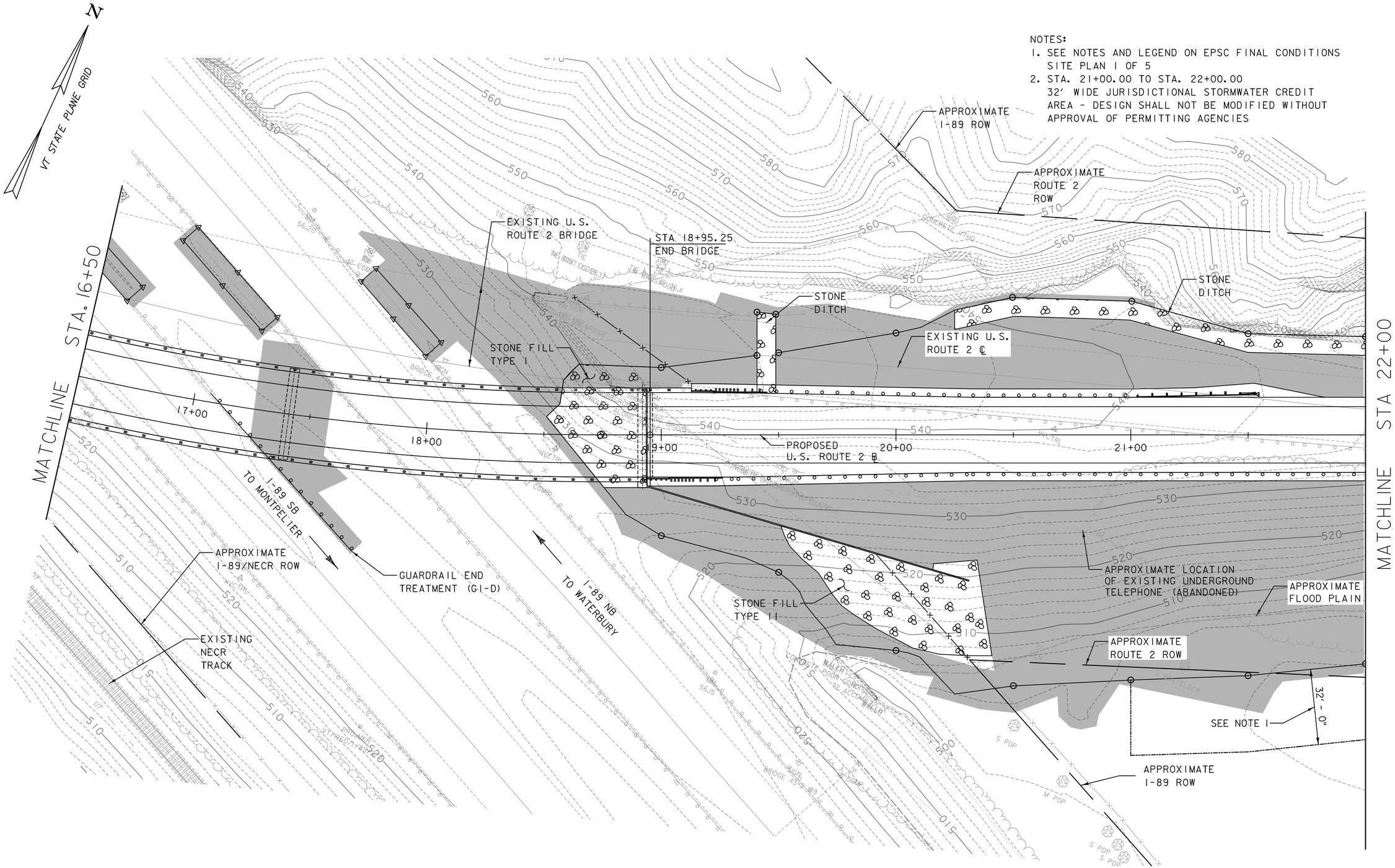

SCALE 1" = 20'-0"
20 0 20

DATUM	
VERTICAL	NAVD 88
HORIZONTAL	NAD 83(96)
ADJUSTMENT	COMPASS

PROJECT NAME: MIDDLESEX
PROJECT NUMBER: IM 089-2(41)

FILE NAME: z07a052bdr_ecf03.dgn
PROJECT LEADER: R. HEBERT
DESIGNED BY: D. BRYANT
EPSC FINAL CONDITIONS SITE PLAN - 3

PLOT DATE: 1/3/2015
DRAWN BY: D. BRYANT
CHECKED BY: D. BURHANS
SHEET 148 OF 154

N

VT STATE PLANE GRID

APPROXIMATE ROUTE 2 ROW

U.S. ROUTE 2
STA 23+50.00
END PROJECT
IM 089-2 (41)
BEGIN APPROACH

STONE DITCH

PROPOSED U.S. ROUTE 2

MATCHLINE STA 22+00

MATCHLINE STA. 27+50

23+00 24+00 25+00 26+00 27+00

SLOPE LIMIT - FINAL CONDITIONS

TEMPORARY CONSTRUCTION LIMITS

APPROXIMATE FLOOD PLAIN

APPROXIMATE ROUTE 2 ROW

STA. 22+00.00 TO STA. 27+50.00
32' WIDE JURISDICTIONAL STORMWATER CREDIT AREA - DESIGN SHALL NOT BE MODIFIED WITHOUT APPROVAL OF PERMITTING AGENCIES

32' - 0"

NOTES:

1. SEE NOTES AND LEGEND ON EPSC FINAL CONDITIONS SITE PLAN 1 OF 5
2. (#) SEE LAYOUT SHEETS FOR NEW DRAINAGE PIPE NOTES

SCALE 1" = 20'-0"
20 0 20

DATUM	
VERTICAL	NAVD 88
HORIZONTAL	NAD 83(96)
ADJUSTMENT	COMPASS

PROJECT NAME: MIDDLESEX
PROJECT NUMBER: IM 089-2(41)

FILE NAME: z07a052bdr_ecf04.dgn
PROJECT LEADER: R. HEBERT
DESIGNED BY: D. BRYANT
EPSC FINAL CONDITIONS SITE PLAN - 4

PLOT DATE: 1/3/2015
DRAWN BY: D. BRYANT
CHECKED BY: D. BURHANS
SHEET 149 OF 154

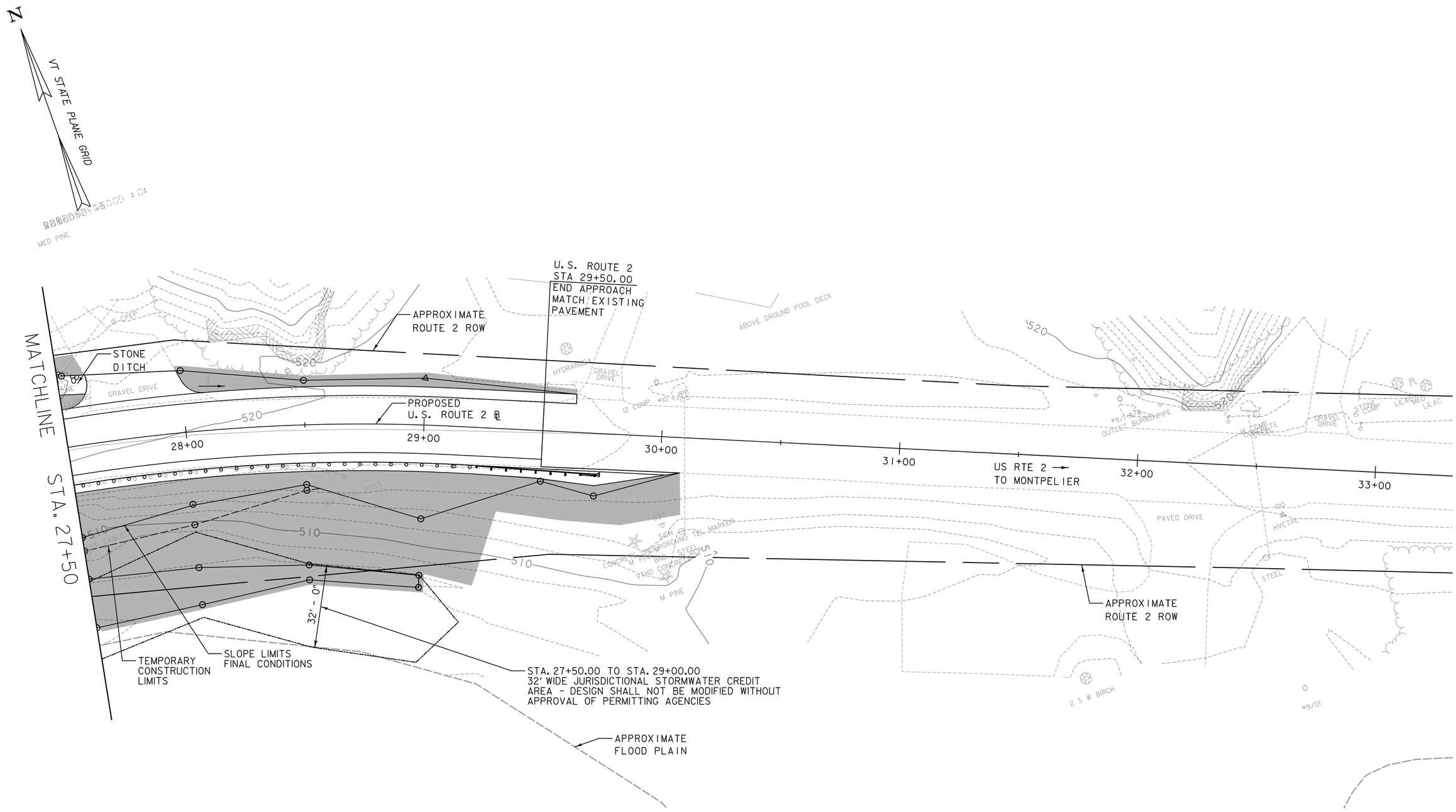

DATUM	
VERTICAL	NAVD 88
HORIZONTAL	NAD 83(96)
ADJUSTMENT	COMPASS

SCALE 1" = 20'-0"
20 0 20

NOTE:
SEE LEGEND AND NOTES ON EPSC FINAL CONDITIONS SITE PLAN 1 OF 5.

PROJECT NAME: MIDDLESEX
PROJECT NUMBER: IM 089-2(41)

FILE NAME: z07a052bdr_ecf05.dgn
PROJECT LEADER: R. HEBERT
DESIGNED BY: D. BRYANT
EPSC FINAL CONDITIONS SITE PLAN - 5

PLOT DATE: 1/3/2015
DRAWN BY: D. BRYANT
CHECKED BY: D. BURHANS
SHEET 150 OF 154

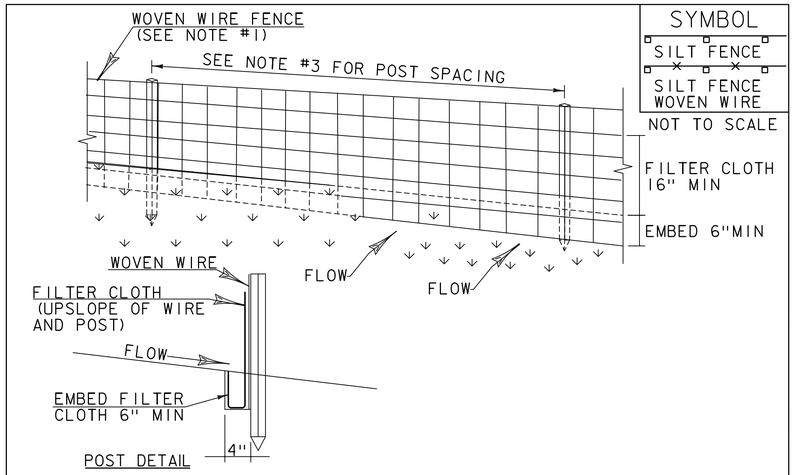

SYMBOL

SILT FENCE

SILT FENCE WOVEN WIRE

NOT TO SCALE

CONSTRUCTION SPECIFICATIONS

1. WOVEN WIRE REINFORCED FENCE IS REQUIRED WITHIN 100' UPSLOPE OF RECEIVING WATERS WHEN THE PROJECT FALLS UNDER A CONSTRUCTION STORMWATER PERMIT. WOVEN WIRE SHALL BE A MIN. 14 GAUGE WITH A 6" MAX. MESH OPENING.

2. FILTER CLOTH SHALL BE EITHER FILTER X, MIRAFI100X, STABILINKA T140N OR APPROVED EQUIVALENT.

3. POST SPACING FOR WIRE-BACKED FENCE SHALL BE 10' MAXIMUM. FOR FILTER-CLOTH FENCE, WHEN ELONGATION IS >50%, POST SPACING SHALL NOT EXCEED 4' AND WHEN ELONGATION IS <50%, POST SPACING SHALL NOT EXCEED 6'.

4. WOVEN WIRE FENCE IS TO BE FASTENED SECURELY TO FENCE POSTS WITH WIRE TIES. FILTER CLOTH IS TO BE FASTENED SECURELY TO WOVEN WIRE FENCE WITH TIES SPACED EVERY 24" AT TOP AND MID SECTION.

5. WHEN TWO SECTIONS OF FILTER CLOTH ADJOIN EACH OTHER THEY SHALL BE OVER-LAPPED BY 6" AND FOLDED.

6. PREFABRICATED UNITS SHALL BE GEOFAB, ENVIROFENCE, OR APPROVED EQUIVALENT.

7. MAINTENANCE SHALL BE PERFORMED AS NEEDED AND MATERIAL REMOVED WHEN SEDIMENT REACHES HALF OF FABRIC HEIGHT.

ADAPTED FROM DETAILS PROVIDED BY: NEW YORK STATE DEC
ORIGINALLY DEVELOPED BY USDA-NRCS
VERMONT DEPARTMENT OF ENVIRONMENTAL CONSERVATION

SILT FENCE

NOTES:
REFER TO "THE VERMONT STANDARDS & SPECIFICATIONS FOR EROSION PREVENTION & SEDIMENT CONTROL -2006- " FROM THE VT AGENCY OF NATURAL RESOURCES FOR ADDITIONAL GUIDANCE.

THIS WORK SHALL BE PERFORMED IN ACCORDANCE WITH SECTION 649 AND AS SHOWN IN THE PLANS FOR GEOTEXTILE FOR SILT FENCE (PAY ITEM 649.51) OR GEOTEXTILE FOR SILT FENCE, WOVEN WIRE REINFORCED (PAY ITEM 649.515).

REVISIONS	
MARCH 21, 2008	WHF
DECEMBER 11, 2008	WHF
JANUARY 13, 2009	WHF

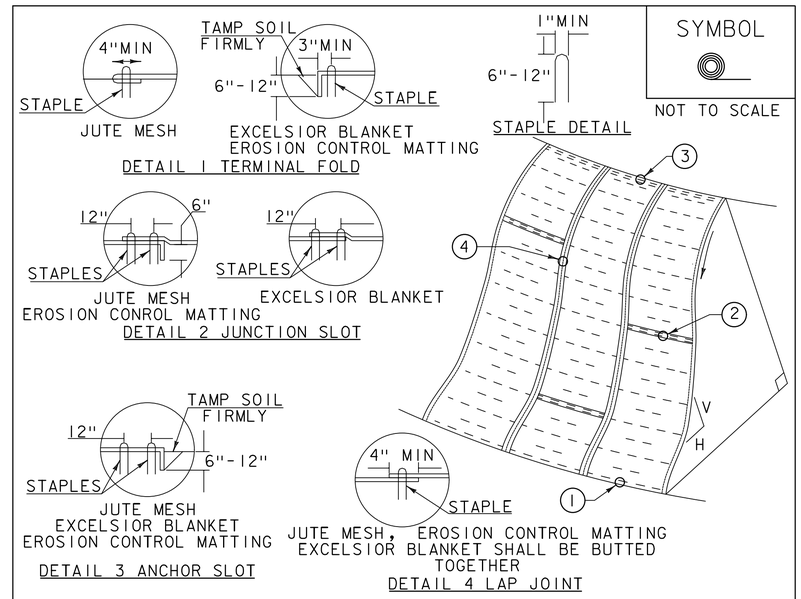

SYMBOL

NOT TO SCALE

CONSTRUCTION SPECIFICATIONS

1. APPLY TO SLOPES GREATER THAN 3H:1V OR WHERE NECESSARY TO AID IN ESTABLISHING VEGETATION.

2. APPLY FERTILIZER, LIME SEED PRIOR TO PLACING MATTING.

3. STAPLES ARE TO BE PLACED ALTERNATELY, IN COLUMNS APPROXIMATELY 2' APART AND IN ROWS APPROXIMATELY 3' APART. APPROXIMATELY 175 STAPLES ARE REQUIRED PER 4'X225' ROLL OF MATERIAL AND 125 STAPLES ARE REQUIRED PER 4'X150' ROLL OF MATERIAL.

4. DISTURBED AREAS SHALL BE SMOOTHLY GRADED. EROSION CONTROL MATERIAL SHALL BE PLACED LOOSELY OVER GROUND SURFACE. DO NOT STRETCH.

5. ALL TERMINAL ENDS AND TRANSVERSE LAPS SHALL BE STAPLED AT APPROXIMATELY 12" INTERVALS.

ADAPTED FROM DETAILS PROVIDED BY: NEW YORK STATE DEC
ORIGINALLY DEVELOPED BY USDA-NRCS
VERMONT DEPARTMENT OF ENVIRONMENTAL CONSERVATION

ROLLED EROSION CONTROL PRODUCT (RECP) SIDE SLOPE

NOTES:
REFER TO "THE VERMONT STANDARDS & SPECIFICATIONS FOR EROSION PREVENTION & SEDIMENT CONTROL -2006- " FROM THE VT AGENCY OF NATURAL RESOURCES FOR ADDITIONAL GUIDANCE.
THIS WORK SHALL BE PERFORMED IN ACCORDANCE WITH SECTION 653 AND AS SHOWN IN THE PLANS FOR TEMPORARY EROSION MATTING (PAY ITEM 653.20) OR PERMANENT EROSION MATTING (PAY ITEM 653.21).

REVISIONS	
APRIL 16, 2007	JMF
JANUARY 13, 2009	WHF

PROJECT NAME: MIDDLESEX
PROJECT NUMBER: IM 089-2(41)

FILE NAME: z07a052bdr_erodet.dgn
PROJECT LEADER: R. HEBERT
DESIGNED BY: VTRANS
EPSC DETAILS SHEET - 1

PLOT DATE: 1/3/2015
DRAWN BY: VTRANS
CHECKED BY: VTRANS
SHEET 151 OF 154

SYMBOL

NOT TO SCALE

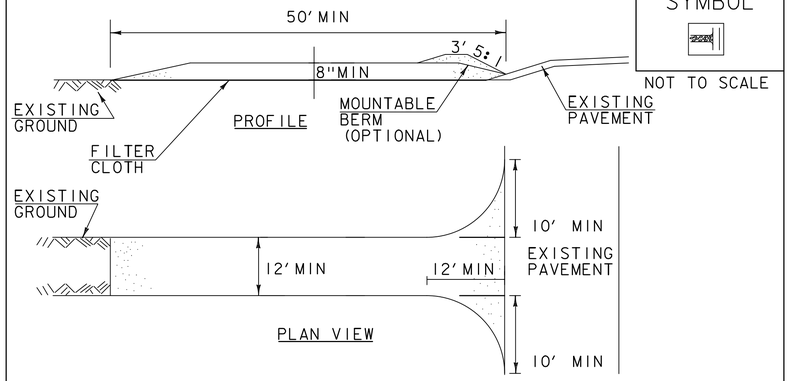

CONSTRUCTION SPECIFICATIONS

1. STONE SIZE- USE 1-4" STONE, RECLAIMED OR RECYCLED CONCRETE EQUIVALENT.
2. LENGTH- NOT LESS THAN 50' (EXCEPT ON A SINGLE RESIDENCE LOT WHERE A 30' MINIMUM LENGTH APPLIES).
3. THICKNESS- NOT LESS THAN 8".
4. WIDTH- 12' MINIMUM, BUT NOT LESS THAN THE FULL WIDTH AT POINTS WHERE INGRESS OR EGRESS OCCURS. 24' IF SINGLE ENTRANCE TO SITE.
5. GEOTEXTILE MUST BE PLACED OVER THE ENTIRE AREA PRIOR TO PLACING STONE.
6. SURFACE WATER- ALL SURFACE WATER FLOWING OR DIVERTED TOWARD CONSTRUCTION ENTRANCES SHALL BE PIPED BENEATH THE ENTRANCE. IF PIPING IS IMPRACTICAL, A MOUNTABLE BERM WITH 5:1 SLOPES WILL BE PERMITTED.
7. MAINTENANCE- THE ENTRANCE SHALL BE MAINTAINED IN A CONDITION WHICH WILL PREVENT TRACKING OR FLOWING OF SEDIMENT ONTO PUBLIC RIGHTS-OF-WAY, ALL SEDIMENT SPILLED, DROPPED, WASHED OR TRACKED ONTO PUBLIC RIGHTS-OF-WAY MUST BE REMOVED IMMEDIATELY.
8. WHEN WASHING IS REQUIRED, IT SHALL BE DONE ON AN AREA STABILIZED WITH STONE AND WHICH DRAINS INTO AN APPROVED SEDIMENT TRAPPING DEVICE.
9. PERIODIC INSPECTION AND NEEDED MAINTENANCE SHALL BE PROVIDED ACCORDING TO PERMIT REQUIREMENTS.

ADAPTED FROM DETAILS PROVIDED BY: NEW YORK STATE DEC
ORIGINALLY DEVELOPED BY USDA-NRCS
VERMONT DEPARTMENT OF ENVIRONMENTAL CONSERVATION

STABILIZED CONSTRUCTION ENTRANCE

NOTES:
REFER TO "THE VERMONT STANDARDS & SPECIFICATIONS FOR EROSION PREVENTION & SEDIMENT CONTROL -2006- "FROM THE VT AGENCY OF NATURAL RESOURCES FOR ADDITIONAL GUIDANCE.

THIS WORK SHALL BE PERFORMED IN ACCORDANCE WITH SECTION 653 FOR VEHICLE TRACKING PAD (PAY ITEM 653.35) OR AS SPECIFIED IN THE CONTRACT.

REVISIONS	
MARCH 24, 2008	WHF
JANUARY 13, 2009	WHF

SYMBOL

NOT TO SCALE

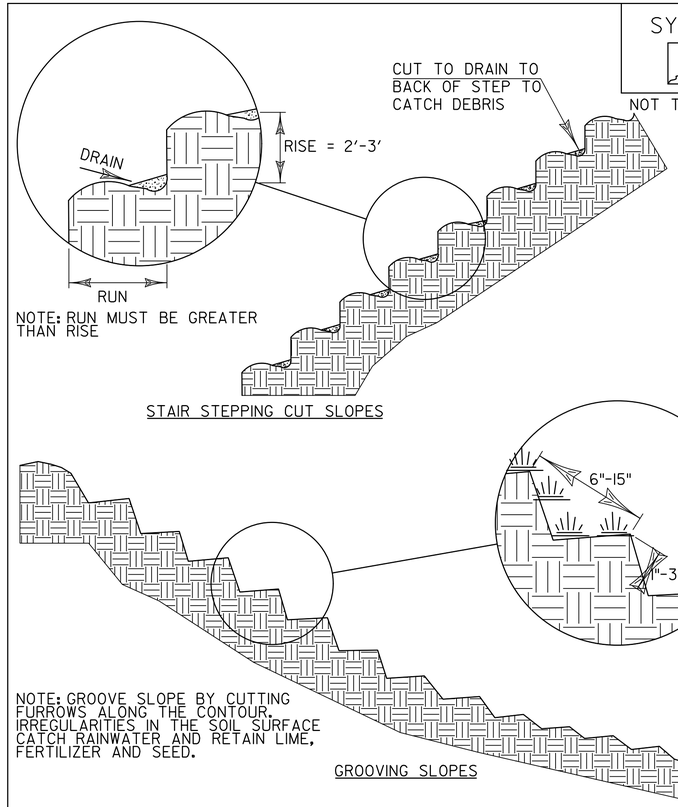

ADAPTED FROM DETAILS PROVIDED BY: NEW YORK STATE DEC
ORIGINALLY DEVELOPED BY USDA-NRCS
VERMONT DEPARTMENT OF ENVIRONMENTAL CONSERVATION

SURFACE ROUGHENING

NOTES:
REFER TO "THE VERMONT STANDARDS & SPECIFICATIONS FOR EROSION PREVENTION & SEDIMENT CONTROL -2006- "FROM THE VT AGENCY OF NATURAL RESOURCES FOR ADDITIONAL GUIDANCE.

THIS WORK SHALL BE CONSIDERED INCIDENTAL TO THE CONTRACT

REVISIONS	
APRIL 1, 2008	WHF
JANUARY 13, 2009	WHF

PROJECT NAME: MIDDLESEX
PROJECT NUMBER: IM 089-2(41)

FILE NAME: z07a052bdr_erodet.dgn
PROJECT LEADER: R. HEBERT
DESIGNED BY: VTRANS
EPSC DETAILS SHEET - 2

PLOT DATE: 1/3/2015
DRAWN BY: VTRANS
CHECKED BY: VTRANS
SHEET 152 OF 154

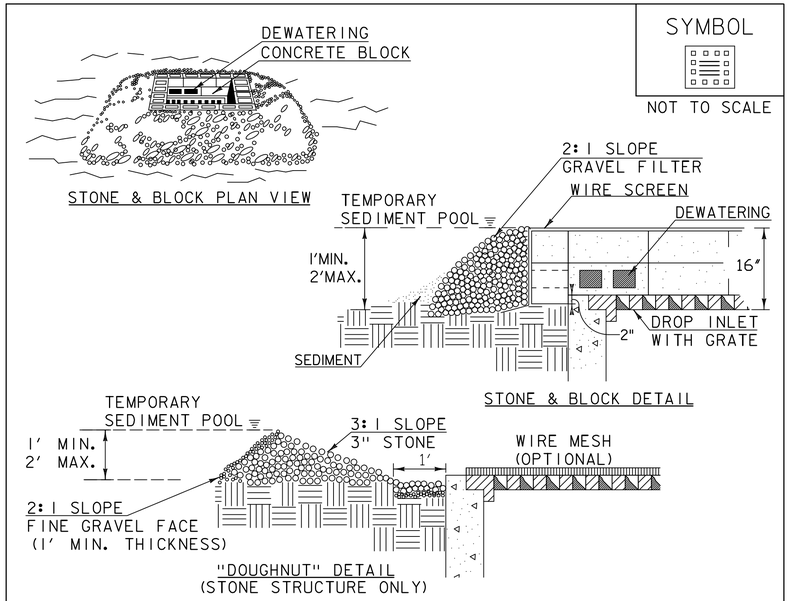

SYMBOL

NOT TO SCALE

CONSTRUCTION SPECIFICATIONS

1. LAY ONE BLOCK ON EACH SIDE OF THE STRUCTURE ON ITS SIDE FOR DEWATERING. FOUNDATION SHALL BE 2" MINIMUM BELOW REST OF INLET AND BLOCKS SHALL BE PLACED AGAINST INLET FOR SUPPORT.
2. HARDWARE CLOTH OR ½" WIRE MESH SHALL BE PLACED OVER BLOCK OPENINGS TO SUPPORT STONE.
3. USE CLEAN STONE OR GRAVEL ½"- ¾" IN DIAMETER PLACED 2" BELOW TOP OF THE BLOCK ON A 2:1 SLOPE OR FLATTER.
4. FOR STONE STRUCTURES ONLY, A 1' THICK LAYER OF THE FILTER STONE WILL BE PLACED AGAINST THE 3" STONE AS SHOWN ON THE DRAWINGS.
5. MAXIMUM DRAINAGE AREA 1 ACRE

ADAPTED FROM DETAILS PROVIDED BY: NEW YORK STATE DEC
ORIGINALLY DEVELOPED BY USDA-NRCS
VERMONT DEPARTMENT OF ENVIRONMENTAL CONSERVATION

STONE & BLOCK DROP INLET PROTECTION

NOTES:
REFER TO "THE VERMONT STANDARDS & SPECIFICATIONS FOR EROSION PREVENTION & SEDIMENT CONTROL -2006- " FROM THE VT AGENCY OF NATURAL RESOURCES FOR ADDITIONAL GUIDANCE.

THIS WORK SHALL BE PERFORMED IN ACCORDANCE WITH SECTION 653 FOR INLET PROTECTION DEVICE, TYPE 1 (PAY ITEM 653.40).

REVISIONS	
MARCH 6, 2008	WHF
JANUARY 13, 2009	WHF

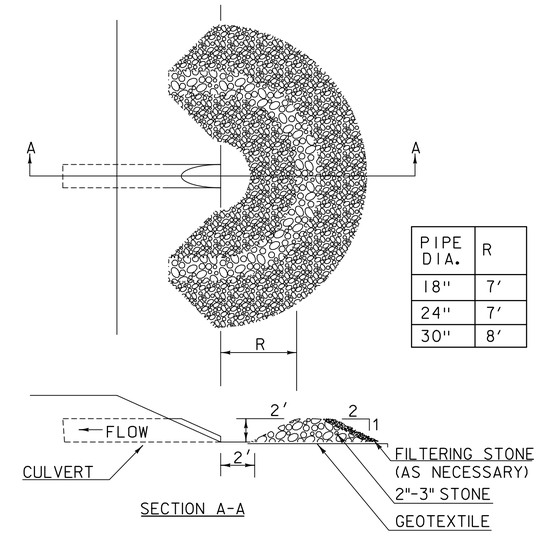

PIPE DIA.	R
18"	7'
24"	7'
30"	8'

SYMBOL

NOT TO SCALE

CONSTRUCTION SPECIFICATIONS

1. USE 2" TO 3" STONE. FILTERING STONE SHALL BE 3/4".
2. PLACE STONE OVER GEOTEXTILE.
3. ONCE THE AREAS UPSTREAM FROM THE CHECK DAM ARE STABILIZED WITH VEGETATION, THE SEDIMENT TRAPPED BEHIND THE DAM SHAL BE DISPOSED OF IN AN APPROVED WASTE AREA.
4. THE CHECK DAM(S) SHALL BE FLATTENED AND GRADED IN A MANNER WHICH PROTECTS THE AREA FROM EROSION AND CHANNEL BLOCKAGE . (GEOTEXTILE MUST BE REMOVED).
5. THE GEOTEXTILE MUST BE DISPOSED OF APPROPRIATELY.
6. THE AREA CONTRIBUTING TO THE CHECK DAM SHALL NOT EXCEED 4 ACRES.

ADAPTED FROM DETAILS PROVIDED BY: ILLINOIS USDA-NRCS
ORIGINALLY DEVELOPED BY USDA-NRCS

PIPE INLET PROTECTION

THIS WORK SHALL BE PERFORMED IN ACCORDANCE WITH SECTION 653 FOR INLET PROTECTION DEVICE, TYPE 1 (PAY ITEM 653.40).

REVISIONS	
MARCH 6, 2008	WHF
JANUARY 13, 2009	WHF

PROJECT NAME: MIDDLESEX
PROJECT NUMBER: IM 089-2(41)

FILE NAME: z07a052bdr_erodet.dgn
PROJECT LEADER: R. HEBERT
DESIGNED BY: VTRANS
EPSC DETAILS SHEET - 3

PLOT DATE: 1/3/2015
DRAWN BY: VTRANS
CHECKED BY: VTRANS
SHEET 153 OF 154

VAOT RURAL AREA MIX					
	LBS/AC				
% WEIGHT	BROADCAST	HYDROSEED	NAME	GERM %	PURITY %
37.5%	22.5	45	CREEPING RED FESCUE	85%	98%
37.5%	22.5	45	TALL FESCUE	90%	95%
5.0%	3	6	RED TOP	90%	95%
15.0%	9	18	BIRDSFOOT TREFOIL	85%	98%
5.0%	3	6	ANNUAL RYE GRASS	85%	95%
100%	60	120			

VAOT URBAN AREA MIX					
	LBS/AC				
% WEIGHT	BROADCAST	HYDROSEED	NAME	GERM %	PURITY %
42.5%	34	68	CREEPING RED FESCUE	85%	98%
10.0%	8	16	PERENNIAL RYE GRASS	90%	95%
42.5%	34	68	KENTUCKY BLUE GRASS	85%	85%
5.0%	4	8	ANNUAL RYE GRASS	85%	95%
100%	80	160			

SOIL AMENDMENT GUIDANCE			
FERTILIZER		LIME	
BROADCAST	HYDROSEED	BROADCAST	HYDROSEED
10-20-10	*FOLLOW*	PELLETIZED	*FOLLOW*
500 LBS/AC	*MANUFACTURER*	2 TONS/AC	*MANUFACTURER*

CONSTRUCTION GUIDANCE

1. RURAL SEED MIX: USE AS INDICATED IN THE PLANS AND/OR FOR ALL ESTABLISHED UPLAND (NON WETLAND) AREAS DISTURBED BY THE CONTRACTOR.
2. URBAN SEED MIX: USE AS INDICATED IN THE PLANS AND/OR FOR ALL ESTABLISHED LAWN AREAS DISTURBED BY THE CONTRACTOR.
3. ALL SEED MIXTURES: SHALL NOT HAVE A WEED CONTENT EXCEEDING 0.40% BY WEIGHT AND SHALL BE FREE OF ALL NOXIOUS SEED.
4. FERTILIZER AND LIMESTONE: SHALL FOLLOW RATES SHOWN ON PLAN OR AS DIRECTED BY THE ENGINEER
5. HAY MULCH: TO BE PLACED ON EARTH SLOPES AT THE RATE OF 2 TONS/ACRE, ACHIEVE 90% GROUND COVER OR AS DIRECTED BY THE ENGINEER.
6. TOPSOIL: TO BE USED WITH SEED AS INDICATED ON THE PLANS, OR AS DIRECTED BY THE ENGINEER.
7. HYDROSEEDING: ALTHOUGH GUIDANCE IS GIVEN ABOVE THE SITE CONDITIONS AND THE TYPE OF HYDROSEED WILL ULTIMATELY DICTATE THE AMOUNTS AND TYPES OF SOIL AMENDMENTS TO BE APPLIED
8. TURF ESTABLISHMENT: PLACING SEED, FERTILIZER, LIME AND MULCH PRIOR TO SEPTEMBER 15 AND AFTER APRIL 15 CAN BETTER ENSURE A VIGOROUS GROWTH OF GRASS.

ADAPTED FROM VTRANS TECHNICAL LANDSCAPE MANUAL FOR ROADWAYS AND TRANSPORTATION FACILITIES

TURF ESTABLISHMENT

REVISIONS	
JUNE 23, 2009	WHF
JANUARY 15, 2010	WHF
FEBRUARY 16, 2011	WHF

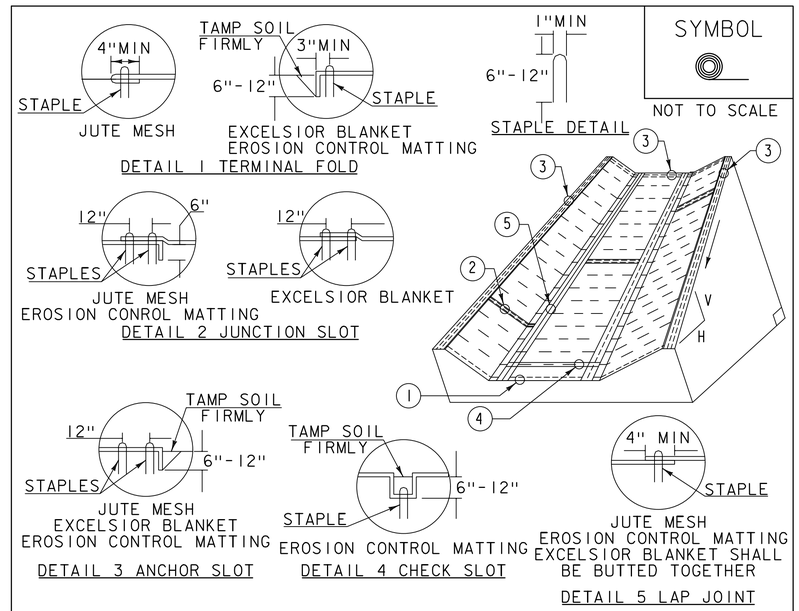

CONSTRUCTION SPECIFICATIONS

1. EROSION MATTING, CHECK SLOTS, SHALL BE SPACED IN DITCH CHANNEL SO THAT ONE OCCURS WITHIN EACH 50′ ON SLOPES OF MORE THAN 4% AND LESS THAN 6%. ON SLOPES OF 6% OR MORE, THEY SHALL BE SPACED SO THAT ONE OCCURS WITHIN EACH 25′.
2. APPLY FERTILIZER, LIME SEED PRIOR TO PLACING MATTING.
3. STAPLES ARE TO BE PLACED ALTERNATELY, IN COLUMNS APPROXIMATELY 2′ APART AND IN ROWS APPROXIMATELY 3′ APART. APPROXIMATELY 175 STAPLES ARE REQUIRED PER 4′X225′ ROLL OF MATERIAL AND 125 STAPLES ARE REQUIRED PER 4′X150′ ROLL OF MATERIAL.
4. DISTURBED AREAS SHALL BE SMOOTHLY GRADED. EROSION CONTROL MATERIAL SHALL BE PLACED LOOSELY OVER GROUND SURFACE. DO NOT STRETCH.
5. ALL TERMINAL ENDS AND TRANSVERSE LAPS SHALL BE STAPLED AT APPROXIMATELY 12" INTERVALS.

ADAPTED FROM DETAILS PROVIDED BY: NEW YORK STATE DEC
ORIGINALLY DEVELOPED BY USDA-NRCS
VERMONT DEPARTMENT OF ENVIRONMENTAL CONSERVATION

ROLLED EROSION CONTROL PRODUCT (RECP) DITCH

NOTES:
REFER TO "THE VERMONT STANDARDS & SPECIFICATIONS FOR EROSION PREVENTION & SEDIMENT CONTROL -2006- " FROM THE VT AGENCY OF NATURAL RESOURCES FOR ADDITIONAL GUIDANCE.
THIS WORK SHALL BE PERFORMED IN ACCORDANCE WITH SECTION 653 AND AS SHOWN IN THE PLANS FOR TEMPORARY EROSION MATTING (PAY ITEM 653.20) OR PERMANENT EROSION MATTING (PAY ITEM 653.21).

REVISIONS	
MARCH 8, 2007	JMF
APRIL 16, 2007	WHF
JANUARY 13, 2009	WHF

PROJECT NAME: MIDDLESEX
PROJECT NUMBER: IM 089-2(41)

FILE NAME: z07a052bdr_erodet.dgn
PROJECT LEADER: R. HEBERT
DESIGNED BY: VTRANS
EPSC DETAILS SHEET - 4

PLOT DATE: 1/3/2015
DRAWN BY: VTRANS
CHECKED BY: VTRANS
SHEET 154 OF 154

SEE SHEET 1A FOR INDEX

STATE OF VERMONT
DEPARTMENT OF HIGHWAYS

PROPOSED IMPROVEMENT

INTERSTATE PROJECT

TOWN OF MIDDLESEX
COUNTY OF WASHINGTON

PROJECT I 89-2(4) — CONTRACT NO 1

BEGINNING AT A POINT IN MIDDLESEX 10.961 FEET WEST OF THE MONTPELIER-MIDDLESEX TOWN LINE AND EXTENDING WESTERLY FOR A DISTANCE OF .5015 MILES

LENGTH OF ROADWAY – 2,648.00 FT. = .5015 MILE.
LENGTH OF BRIDGES – 0.00 FT. = .00 MILE.
LENGTH OF CONTRACT – 2,648.00 FT. = .5015 MILE.

DESIGN DESIGNATION

ADT (1955)	4380
ADT (1975)	9300
DHV (1975)	1270
D	59 %
T	6.5 %
V	70 MPH

FED. ROAD REGION NO.	STATE	PROJECT NO.	FISCAL YEAR	SHEET NO.	TOTAL SHEETS
I	VT.	I 89-2(4)	1958	1	600

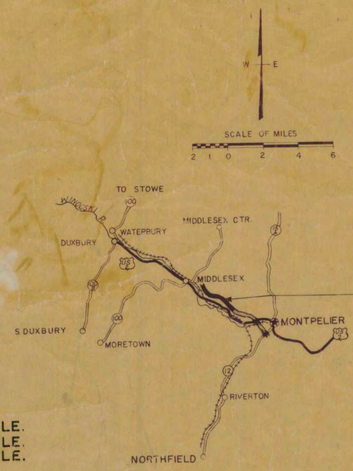

LOCATION OF PROJECT

PROJECT I 89-2(4)

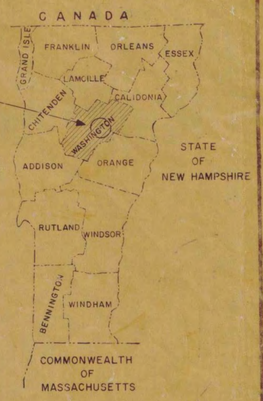

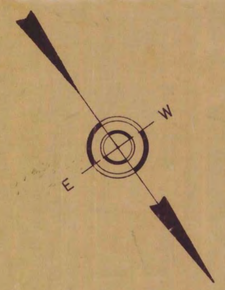

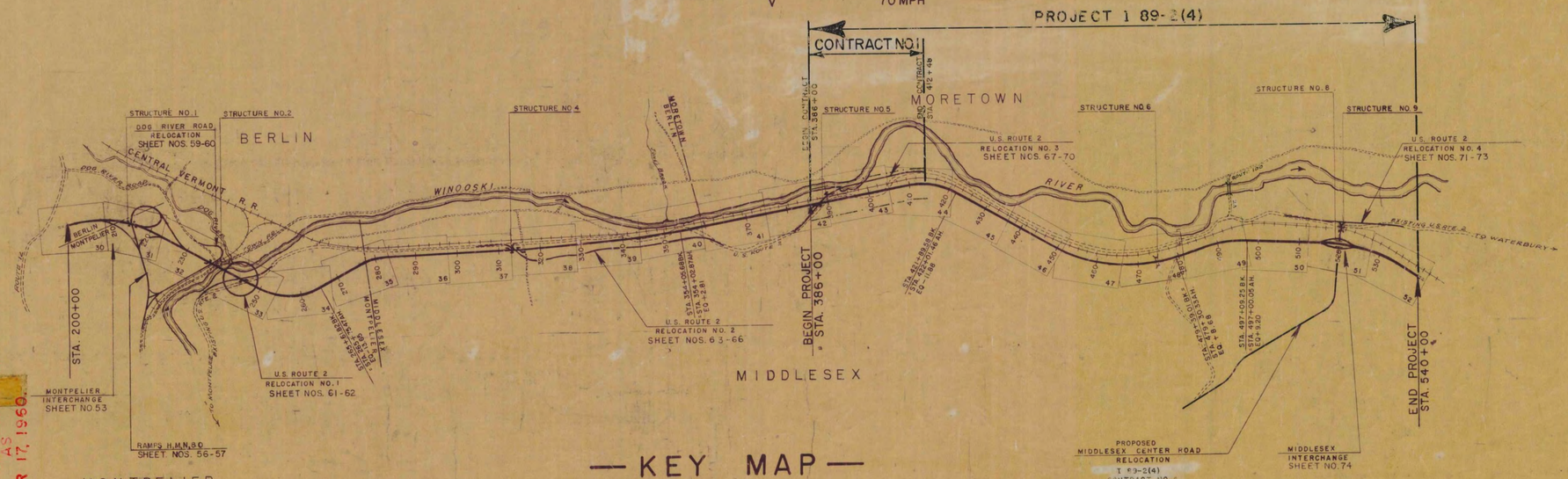

— KEY MAP —
SCALE – 1" = 1500'

CONVENTIONAL SIGNS

R.O.W. LINE
COUNTY LINE
TOWN LINE
FENCE LINE
STONE WALL
UNFENCED PROPERTY
GUARD RAIL
TRAVELED WAY
RAILROAD
RETAINING WALL
CENTER LINE
SURVEY LINE
CULVERT
DROP INLET
TROLLEY POLE
POWER POLE
TELEPHONE POLE
TREES
HEDGE
ACCESS CONTROL LINE

GROUND ELEVATION — DATUM — 185.3 LINE
GRADE ELEVATION — DATUM — 127.5 LINE

CURVE DATA

DEFLECTION OF ANGLE	Δ
DEGREE OF CURVE	D
RADIUS OF CURVE	R
TANGENT DISTANCE	T
LENGTH OF CURVE	L
EXTERNAL DISTANCE	E
POINT OF INTERSECTION	P.I.
POINT OF CURVE	P.C.
POINT OF TANGENT	P.T.
POINT ON TANGENT	P.O.T.
POINT ON SUB-TANGENT	P.O.S.T.

SCALES

TITLE		1" = 1500'
TYPICALS		As Shown
PLAN		1" = 50'
PROFILE	HORIZONTAL	1" = 50'
	VERTICAL	1" = 10'
CROSS-SECTIONS		1" = 10' or 5'

MIDDLESEX – I-89-2(4) Contract 1
CONTRACTOR – RALPH B. COURRICH INC. – SO. BURLINGTON, VT.
RECORD PLANS – J. R. HUGHES AS
CONTRACT COMPLETED – NOVEMBER 17, 1960.

THESE PLANS ARE SUBJECT TO SUCH REVISIONS AS MAY BE REQUIRED BY THE BUREAU OF PUBLIC ROADS OR THE COMMISSIONER OF HIGHWAYS.

CONSTRUCTION IS TO BE CARRIED ON IN ACCORDANCE WITH THE PLANS AND THE STANDARD SPECIFICATIONS FOR HIGHWAY AND BRIDGE CONSTRUCTION OF JANUARY, 1956, SUBMITTED TO THE BUREAU OF PUBLIC ROADS, AS APPROVED JULY 5, 1956, INCLUDING ALL SUBSEQUENT APPROVED REVISIONS AND SUCH REVISED SPECIFICATIONS AND SPECIAL PROVISIONS AS SUBMITTED WITH THE PLANS.

DEPARTMENT OF COMMERCE
BUREAU OF PUBLIC ROADS
APPROVED
DIVISION ENGINEER — DATE

SUBMITTED David E. Boswell CONSULTING ENGINEER DATE Aug. 15, 1957	APPROVED SECONDARY ENGINEER DATE	APPROVED O. E. Coates CONSTRUCTION ENGINEER DATE	APPROVED BRIDGE ENGINEER DATE	APPROVED DISTRICT ENGINEER DATE 22, 1959	APPROVED R. M. Rowe HIGHWAY ENGINEER DATE DEC 10, 1959	APPROVED H. E. Lafount CHIEF ENGINEER DATE DEC 10, 1959 SUBMITTED BY ORDER OF THE STATE HIGHWAY BOARD

PROJECT I NO. 89-2(4)
CONTRACT 1
SHEET 1 OF 600 SHEETS

FED. ROAD DIV. No.	STATE	FEDERAL PROJECT No.	SHEET	TOTAL SHEETS
	VERMONT	1002-21 ( )	145	800

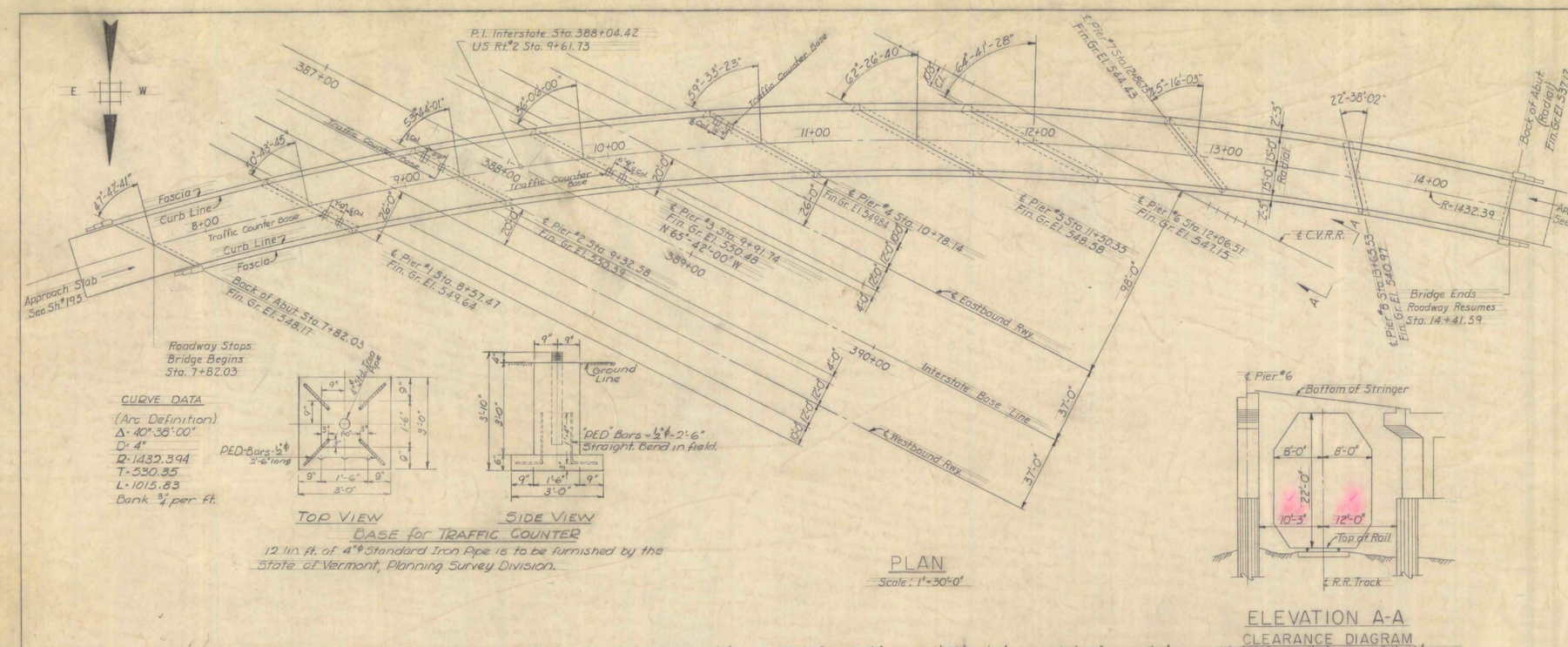

PLAN

Scale: 1"=30'-0"

ELEVATION A-A

CLEARANCE DIAGRAM

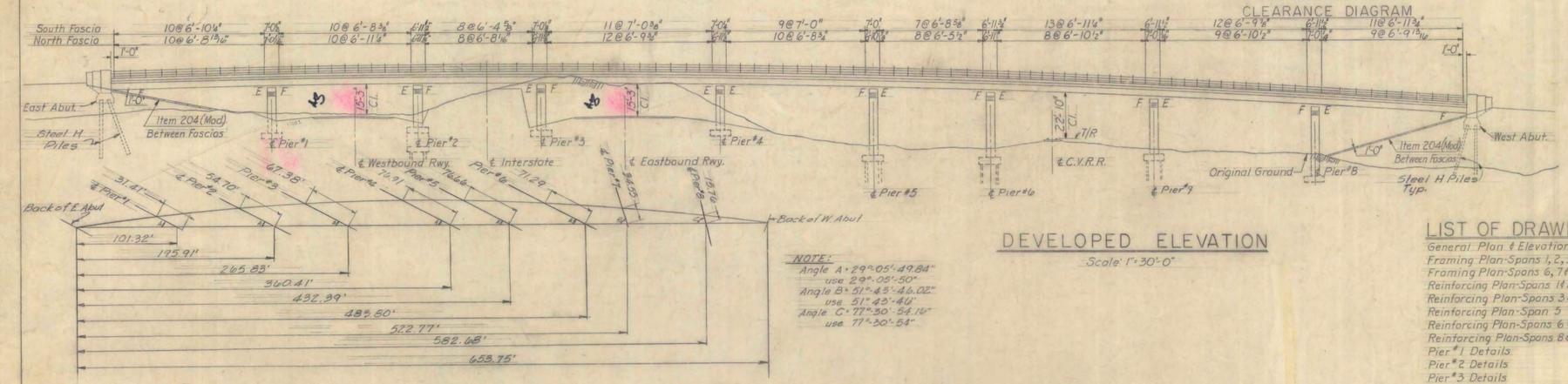

DEVELOPED ELEVATION

Scale: 1"=30'-0"

NOTE:
Angle A: 29°-05'-49.84"
use 29°-05'-50"
Angle B: 51°-43'-46.02"
use 51°-43'-46"
Angle C: 77°-30'-54.16"
use 77°-30'-54"

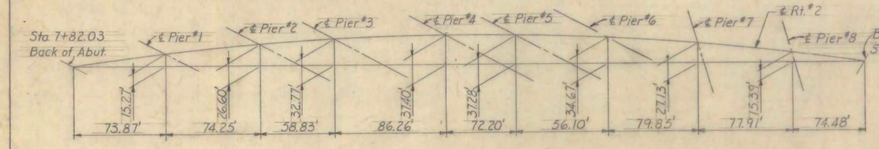

MAJOR CHORD OFFSETS

N.T.S.

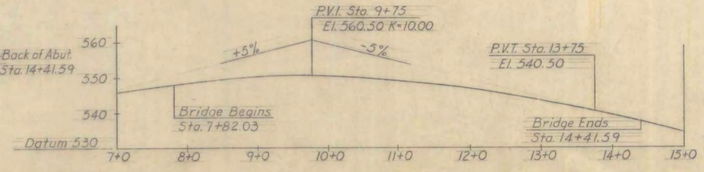

PROFILE

Scale: Hor. 1"=100'
Vert. 1"=20'

ESTIMATE OF QUANTITIES				
ITEM	DESCRIPTION	UNIT	QUANTITY NEAT	QUANTITY ROUND
107	Structure Excavation	C.Y.	1,013	1,116
204	Sub-Base of Crushed Rock (Mod.)	C.Y.	194	204
361 B	Bituminous Conc. Pav't (Incl. Appr. Slab) (Mod.)	Ton	267	306
401 B	Class "B" Concrete (Incl. Appr. Slab) (Mod.)	C.Y.	1,862	1,956
402	Reinforcing Steel (Incl. Appr. Slab)	Lb.	287,455	—
403	Spiral Reinforcement (11,586 Lbs.)	L.S.	—	1
404 A	Structural Steel	Lb.	872,327	888,770
407	Asphaltic Asbestos Coating	S.Y.	184	—
501	Furnishing Equip. for Driving Piles	L.S.		1
504	Steel Piling (10 BP 42)	L.F.	5,535	—
556 C	Granite Bridge Curb (Incl. Appr. Slab)	L.F.	1,354	—
572	Bridge Railing	L.F.	1,301	—
596	Preparing Existing Pave. for New Wearing Surf.	S.Y.		4840
	Temp. Subsurface Drainage (Item 204 (Mod.))	L.S.		1
	Furnishing & Driving Piling (Supp. Agr. 11-20-59)	Ea.		2

GENERAL NOTES

1. All materials and construction shall conform to the State of Vermont Department of Highways, Standard Specifications for Road and Bridge Construction dated Jan. 1956 and the A.A.S.H.O. Standard Specifications dated 1953. Designed for H20-S16-44 loading modified for National System of Interstate Highway applied in accordance with the provisions of the A.A.S.H.O. Standard Specifications Art. 3.28.
2. All beams shall be rolled to a true circular camber, full length and the middle ordinate to be as shown on contract plans.
3. The final coat of paint shall be black unless otherwise directed by the Engineer.
4. All dimensions given are measured horizontally or vertically unless noted.
5. All reinforcing to have a clear cover of 3" unless noted.
6. All exposed edges of concrete shall be chamfered 1"x1" unless noted.
7. Borings indicated on the drawings have been made for design purposes only and are not warranted to show subsurface conditions.
8. Elevation Datum Sea Level Based on Bench Line U.S.C.G.S. Survey Level Line Vermont 25 (Second Order).
9. All skew angles are measured from radial lines.
10. Bridge geometry based on arc definition of curve.
11. For construction purposes, sheeting, bracing etc. must have minimum clearance of 8'-0" from the ℄ of the track at the top of the ties.
12. Where piles are driven in fill, the material should be such as to have no stones large enough to interfere with the driving of piles.
13. Piles shall not be spliced without the written approval of the Engineer.
14. The top surfaces of all piers and abutments shall be sloped ¼" per foot from the back edge of abutments or centerline of piers except for bearing pads projecting 1" or more above general area, which surfaces shall be level. These sloping surfaces shall be coated with asphaltic asbestos coating, ½" thick as per Item 407 of the Specifications and rounded up against the pads.
15. All bearing elevations of abutments and piers have been lowered 1½" to compensate for excessive camber rolled in beams of the mill.
16. Where rock is encountered, no footings shall be poured until all blasting in the adjacent area has been completed.
17. Abut #1, Pier #1 thru Pier #6 are parallel to each other.

LIST OF DRAWINGS

General Plan & Elevation	Sh. #145
Framing Plan-Spans 1, 2, 3, 4 & 5	Sh. #146
Framing Plan-Spans 6, 7 & 8	Sh. #147
Reinforcing Plan-Spans 1 & 2	Sh. #148
Reinforcing Plan-Spans 3 & 4	Sh. #149
Reinforcing Plan-Span 5	Sh. #150
Reinforcing Plan-Spans 6 & 7	Sh. #151
Reinforcing Plan-Spans 8 & 9	Sh. #152
Pier #1 Details	Sh. #153
Pier #2 Details	Sh. #154
Pier #3 Details	Sh. #155
Pier #4 Details	Sh. #156
Pier #5 Details	Sh. #157
Pier #6 Details	Sh. #158
Pier #7 Details	Sh. #159
Pier #8 Details	Sh. #160
East Abutment Details	Sh. #161
West Abutment Details	Sh. #162
Bar Schedule	Sh. #163
Bar Schedule	Sh. #164
Bar Schedule	Sh. #165
Boring Logs	Sh. #166
Approach Slab (West End)	Sh. #192
Approach Slab (East End)	Sh. #195
Structural Details A	Sh. #197
Structural Details B	Sh. #198
Structural Details C	Sh. #199

REFERENCE DRAWINGS

Plan & Profile Interstate Baseline	Sh. #42 #43
Plan & Profile U.S. #2 Relocation	Sh. #68

STATE OF VERMONT
DEPARTMENT OF HIGHWAYS

INTERSTATE PROJECT in the towns of
BERLIN - MONTPELIER - MIDDLESEX

UNDERPASS STA. 388+04.42 STRUCTURE #5

GENERAL PLAN & ELEVATION

BOSWELL ENGINEERING CO.
CONSULTING ENGINEERS
RIDGEFIELD PARK, N. J.

SURVEYED BY V.I.	CHECKED BY M.U.C.	SCALE As Shown
DRAWN BY G.K.	IN CHARGE H.A.	DATE Aug. 1962

PROJECT NO. I 89-2-(4) SHEET 145 OF 800

FED. ROAD DIV. No.	STATE	FEDERAL PROJECT No.	SHEET	TOTAL SHEETS
	VERMONT	1002-21 Y	146	800

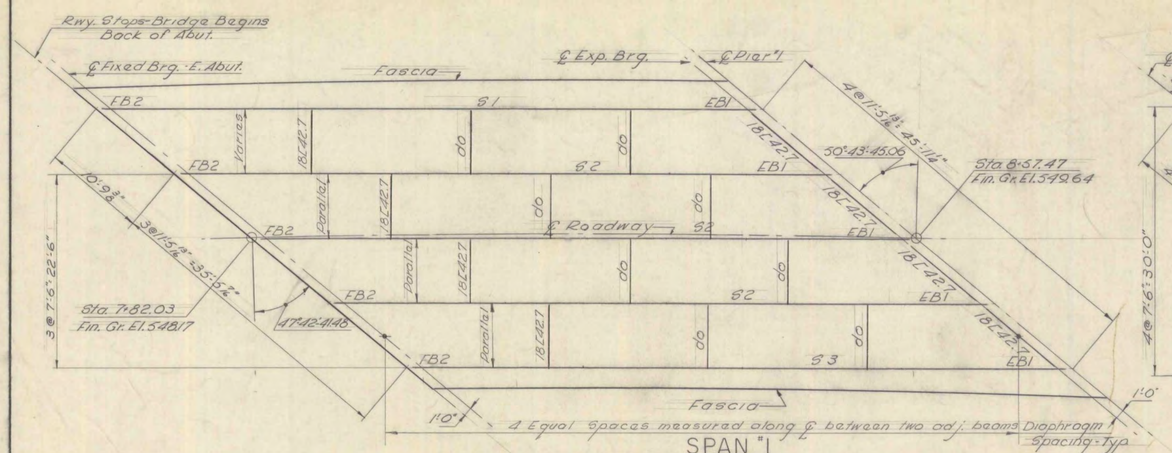

SPAN #1
Scale: 1/8"=1'-0"

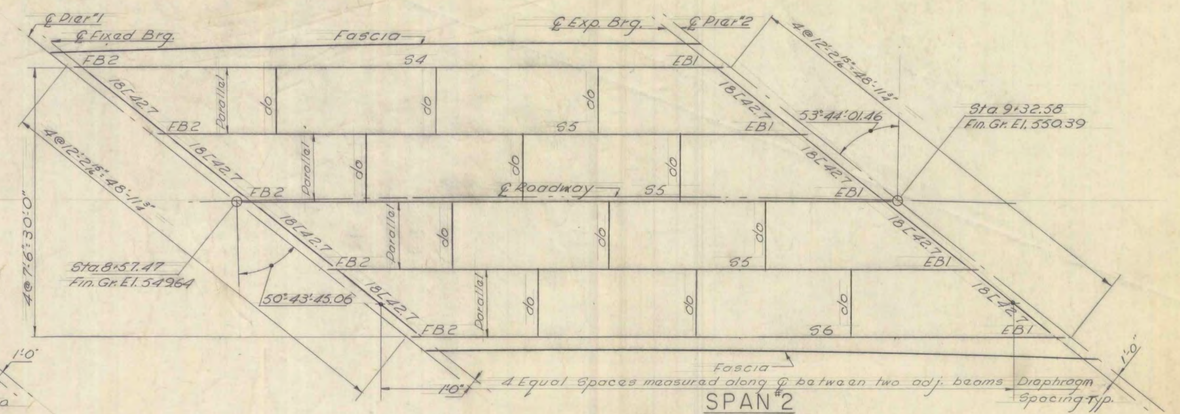

SPAN #2
Scale: 1/8"=1'-0"

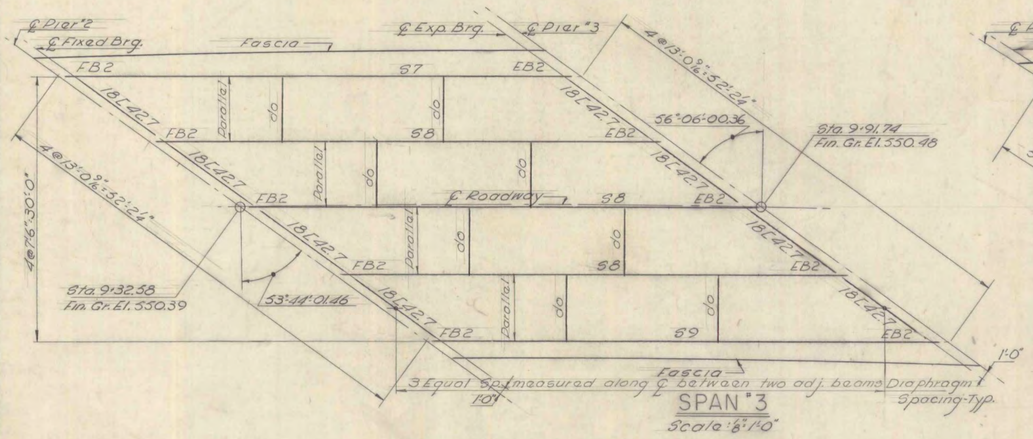

SPAN #3
Scale: 1/8"=1'-0"

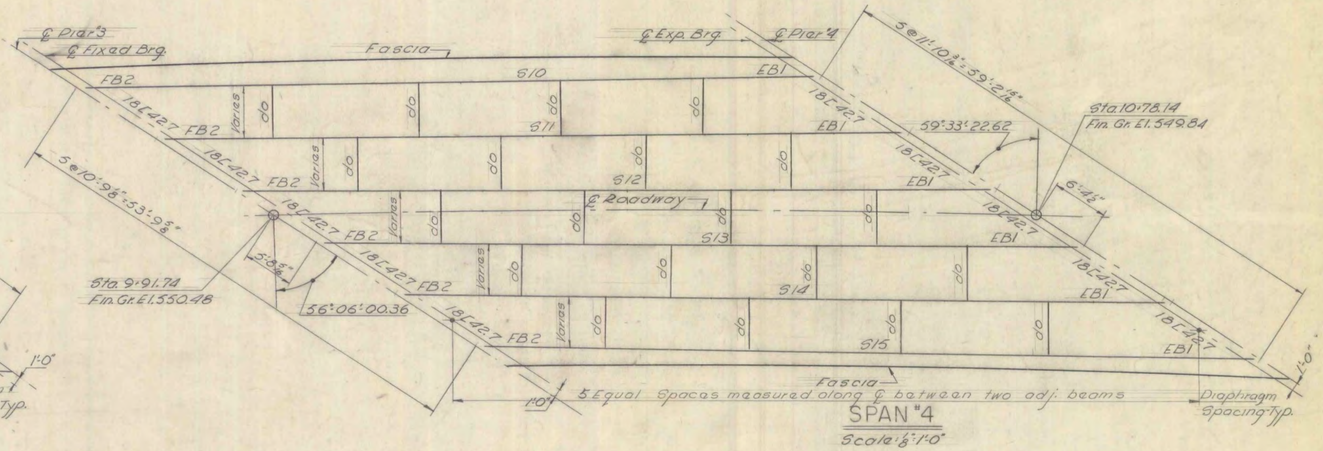

SPAN #4
Scale: 1/8"=1'-0"

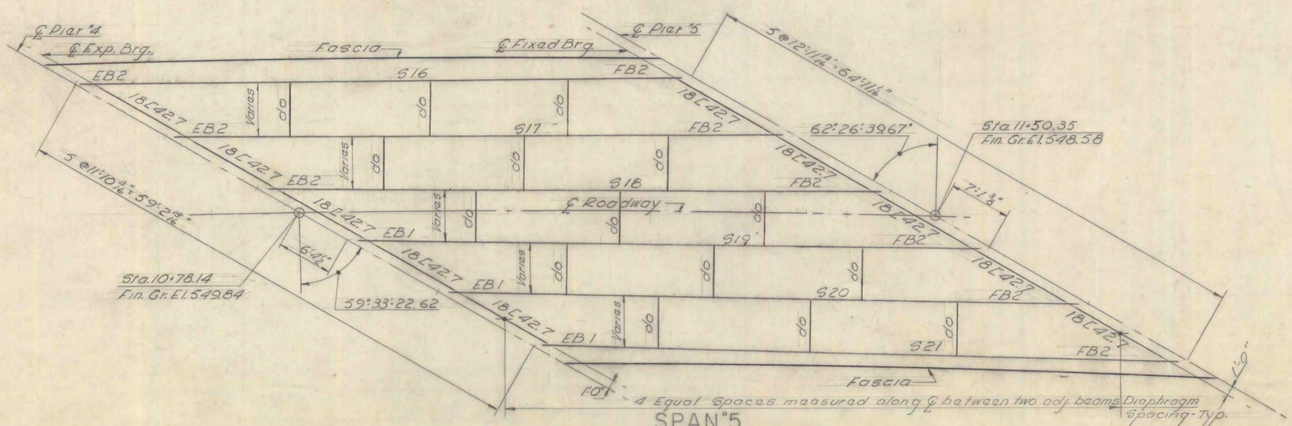

SPAN #5
Scale: 1/8"=1'-0"

ESTIMATE OF QUANTITIES

ITEM #	DESCRIPTION	UNIT	SPAN #1	SPAN #2	SPAN #3	SPAN #4	SPAN #5
403	Spiral Reinforcc. (6689 Lb)	L.S.	—	—	—	—	—
404A	Structural Steel	Lb.	88,144	88,349	53,817	167,422	97,786

NOTE:

1. For General Notes See Sh. #145
2. For Bearing Devices See Detail "E" Sh. #197
3. For Spiral Welds See Detail "L" Sh. #197
4. For Typical Cross Section See Sh. #152
5. For Intermediate Diaphragm Details See Detail "G" Sh. #197
6. For End Diaphragm Details See Detail "H" Sh. #197
7. For Cover Plates See Detail "A" Sh. #197
8. For Stringer Cutoff at Piers See Detail "R" Sh. #198
9. All Skew Angles Are Measured From Radial Lines.

STATE OF VERMONT
DEPARTMENT OF HIGHWAYS

INTERSTATE PROJECT in the towns of
BERLIN - MONTPELIER - MIDDLESEX

UNDERPASS STA. 388+04.42 STRUCTURE #5

FRAMING PLAN SPANS 1,2,3,4 & 5

BOSWELL ENGINEERING CO.
CONSULTING ENGINEERS
RIDGEFIELD PARK, N. J.

SURVEYED BY V.I.	CHECKED BY M.J.C.	SCALE	As Shown
DRAWN BY D.R.F.	IN CHARGE K.A.	DATE	Aug. 1952

PROJECT NO. I 89-2-(4) SHEET 146 OF 800

FED. ROAD DIV. NO.	STATE	FEDERAL PROJECT NO.	SHEET	TOTAL SHEETS
	VERMONT	I002-2(4)	147	800

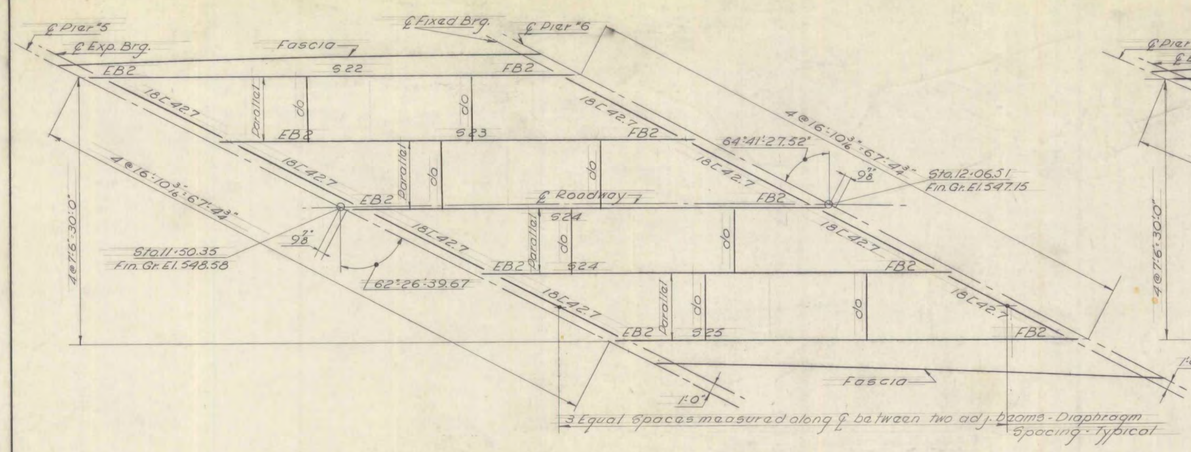

SPAN #6
Scale: 1/8" = 1'-0"

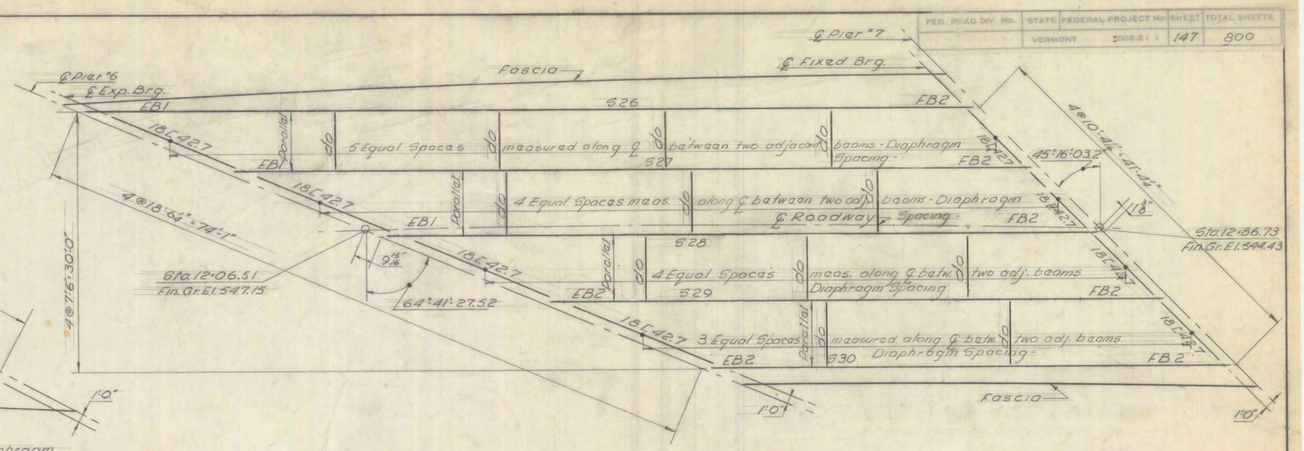

SPAN #7
Scale: 1/8" = 1'-0"

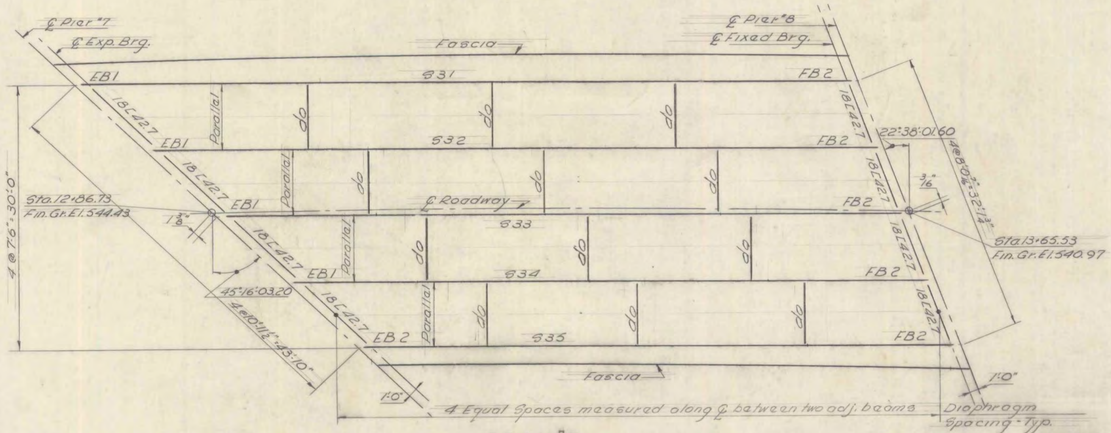

SPAN #8
Scale: 1/8" = 1'-0"

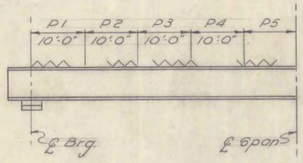

SPIRAL PITCH
Not to Scale

NOTE:

1. For General Notes See Sh. #145
2. For Bearing Devices See Detail "E" Sh. #197
3. For Spiral Welds See Detail "L" Sh. #197
4. For Typical Cross Section See Sh. #152
5. For Intermediate Diaphragm Details See Detail "B" Sh. #197
6. For End Diaphragm Details See Detail "H" Sh. #197
7. For Cover Plates See Detail "A" Sh. #197
8. For Stringer Cutoff At Piers See Detail "R" Sh. #198
9. All Skew Angles Are Measured From Radial Lines.

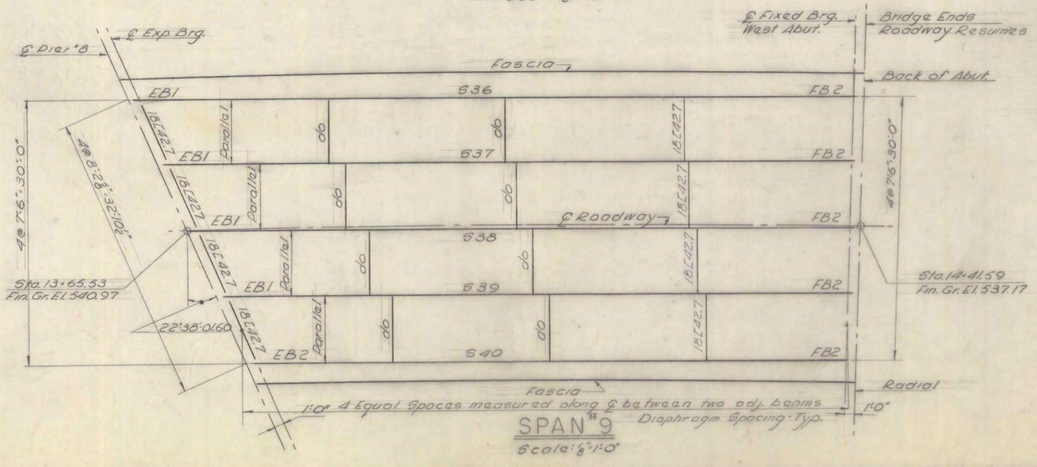

SPAN #9
Scale: 1/8" = 1'-0"

STRINGER SCHEDULE

Stringer Mark	No Reqd	Size W.F.	Dist. C.C Bearing	Length of Beam	Length & Size Bott. Cover Pl.	D.L. Defl'n	Cam.	Spiral Pitch P1	P2	P3	P4	P5
S 1	1	36 WF 170	71'-10 3/8"	74'-0 3/8"	14" x 1" x 51'-9"	1 1/2"	3"	4"	5 5/8"	8"	—	13"
S 2	3	36 WF 170	72'-4 7/16"	73'-10 1/8"	14" x 1" x 51'-9"	1 1/2"	3"	4"	5 5/8"	8"	—	13"
S 3	1	36 WF 170	72'-4 7/16"	74'-6 1/8"	14" x 1" x 51'-9"	1 1/2"	3"	4"	5 5/8"	8"	—	13"
S 4	1	36 WF 170	71'-10 7/16"	74'-11 3/8"	14" x 1" x 51'-9"	1 1/2"	3"	4"	5 5/8"	8"	—	13"
S 5	3	36 WF 170	71'-10 7/16"	73'-4 1/8"	14" x 1" x 51'-9"	1 1/2"	3"	4"	5 5/8"	8"	—	13"
S 6	1	36 WF 170	71'-10 7/16"	74'-11 3/8"	14" x 1" x 51'-9"	1 1/2"	3"	4"	5 5/8"	8"	—	13"
S 7	1	36 WF 150	55'-8 1/8"	58'-11 1/8"	—	1"	2 1/8"	4"	6"	—	—	10"
S 8	3	33 WF 130	55'-8 1/8"	57'-2 1/2"	10" x 7/8" x 36'-6"	1"	2 1/8"	4"	6"	—	—	10"
S 9	1	36 WF 150	55'-8 1/8"	58'-11 1/8"	—	1"	2 1/8"	4"	6"	—	—	10"
S 10	1	36 WF 245	80'-6 11/16"	84'-0 5/8"	14" x 1" x 51'-10"	2 1/4"	3 3/4"	4"	5"	7"	—	10"
S 11	1	36 WF 245	81'-5 3/16"	82'-11 1/4"	14" x 1" x 51'-10"	2 1/4"	3 3/4"	4"	5"	7"	10"	16"
S 12	1	36 WF 245	82'-3 7/16"	83'-9 3/8"	14" x 1" x 51'-10"	2 1/4"	3 3/4"	4"	5"	7"	10"	16"
S 13	1	36 WF 245	83'-2 1/2"	84'-8 1/4"	14" x 1" x 51'-10"	2 1/4"	3 3/4"	4"	5"	7"	10"	16"
S 14	1	36 WF 300	84'-0 7/8"	85'-6 3/8"	14" x 1" x 52'-8"	2 3/8"	3 3/4"	4"	5"	7"	10"	16"
S 15	1	36 WF 300	84'-11 1/2"	88'-7 1/8"	14" x 1" x 52'-8"	2 3/8"	3 3/4"	4"	5"	7"	10"	16"
S 16	1	36 WF 160	65'-10 11/16"	69'-8 5/8"	13" x 7/8" x 46'-3"	1 1/4"	2 1/4"	4"	5 5/8"	8 5/8"	—	15"
S 17	1	36 WF 160	66'-9 3/8"	68'-3 3/4"	13" x 7/8" x 46'-3"	1 1/4"	2 1/4"	4"	5 5/8"	8 5/8"	—	15"
S 18	1	36 WF 160	67'-8 9/16"	69'-3"	13" x 7/8" x 46'-3"	1 1/4"	2 1/4"	4"	5 5/8"	8 5/8"	—	15"
S 19	1	36 WF 170	68'-8 1/16"	70'-2 1/8"	14" x 1" x 51'-9"	1 1/2"	2 1/2"	4"	5 5/8"	8"	—	13"
S 20	1	36 WF 170	69'-7 7/16"	71'-1 1/2"	14" x 1" x 51'-9"	1 1/2"	2 1/2"	4"	5 5/8"	8"	—	13"
S 21	1	36 WF 170	70'-6 3/4"	74'-8 1/8"	14" x 1" x 51'-9"	1 1/2"	2 1/2"	4"	5 5/8"	8"	—	13"
S 22	1	36 WF 150	51'-8 1/16"	56'-0"	—	3/4"	1 1/8"	4 1/2"	6 1/2"	—	—	11 1/2"
S 23	1	33 WF 130	51'-8 1/16"	53'-2 1/8"	10" x 5/8" x 29'-3"	3/4"	1 1/4"	4 1/2"	6 1/2"	—	—	11 1/2"
S 24	2	33 WF 130	51'-8 1/16"	53'-2 1/8"	10" x 5/8" x 29'-3"	3/4"	1 1/4"	4 1/2"	6 1/2"	—	—	11 1/2"
S 25	1	36 WF 150	51'-8 1/16"	56'-0"	—	3/4"	1 1/4"	4 1/2"	6 1/2"	—	—	11 1/2"
* S 26	1	36 WF 300	95'-3 1/16"	99'-0 3/8"	18" x 1 1/2" x 66'-9"	3"	4 1/2"	4"	4 1/2"	6"	9"	14"
S 27	1	36 WF 300	85'-6 1/16"	87'-0 3/8"	14" x 1" x 52'-8"	2 3/8"	3 3/4"	4"	5"	7"	10"	15"
S 28	1	36 WF 194	75'-8 7/16"	77'-2 1/2"	14" x 1 5/8" x 54'-0"	1 7/8"	3"	4"	5"	7 1/2"	—	11 1/2"
S 29	1	36 WF 160	65'-10 7/16"	67'-4 1/2"	13" x 7/8" x 46'-3"	1 1/4"	2 1/4"	4"	5 5/8"	8 1/2"	—	15"
S 30	1	36 WF 150	56'-0 7/16"	59'-5 1/2"	10" x 7/8" x 36'-6"	1"	1 7/8"	4"	6"	—	—	10"
S 31	1	36 WF 300	86'-8 1/2"	88'-9 3/8"	14" x 1" x 52'-8"	2 3/8"	3 3/4"	4"	5"	7"	10"	16"
S 32	1	36 WF 245	81'-3 3/8"	82'-9 1/8"	14" x 1" x 51'-10"	2 1/4"	3 1/8"	4"	5"	7"	10"	16"
S 33	1	36 WF 194	76'-2 1/8"	77'-8 1/8"	14" x 1 5/8" x 54'-0"	1 7/8"	3"	4"	5"	7 1/2"	—	11 1/2"
S 34	1	36 WF 170	71'-0 1/8"	72'-6 1/8"	14" x 1" x 51'-9"	1 1/2"	2 1/8"	4"	5 5/8"	8"	—	13"
S 35	1	36 WF 160	65'-11 1/8"	68'-4 1/8"	13" x 7/8" x 46'-3"	1 1/4"	2 1/4"	4"	5 5/8"	8 1/2"	—	15"
S 36	1	36 WF 245	81'-1"	82'-10 1/2"	14" x 1" x 51'-10"	2 1/4"	3 1/8"	4"	5"	7"	10"	13"
S 37	1	36 WF 194	77'-6 1/2"	79'-0 1/2"	14" x 1 5/8" x 54'-0"	1 7/8"	3 1/8"	4"	5"	7 1/2"	—	11 1/2"
S 38	1	36 WF 194	73'-11 1/2"	75'-5 1/2"	14" x 1 5/8" x 54'-0"	1 7/8"	3"	4"	5"	7 1/2"	—	11 1/2"
S 39	1	36 WF 170	70'-4 1/2"	71'-10 1/8"	14" x 1" x 51'-9"	1 1/2"	2 1/8"	4"	5 5/8"	8"	—	13"
S 40	1	36 WF 160	66'-10"	68'-7 1/4"	13" x 7/8" x 46'-3"	1 1/4"	2 1/4"	4"	5 5/8"	8 1/2"	—	15"

* Stringer Mark S 26 has a top Cover Plate 12" x 1/2" x 63'-6"

ESTIMATE OF QUANTITIES

ITEM #	DESCRIPTION	UNIT	SPAN 6	SPAN 7	SPAN 8	SPAN 9
403	Spiral Reinf. (4897 Lbs.)	L.S.	—	—	—	—
404.A	Structural Steel	Lb.	61,232	119,870	109,670	96,037

STATE OF VERMONT
DEPARTMENT OF HIGHWAYS

INTERSTATE PROJECT in the towns of
BERLIN - MONTPELIER - MIDDLESEX

UNDERPASS STA. 388+04.2 STRUCTURE #5

FRAMING PLAN - SPANS #6, #7, #8, #9

BOSWELL ENGINEERING CO.
CONSULTING ENGINEERS
RIDGEFIELD PARK, N.J.

SURVEYED BY: VT.	CHECKED BY: M.J.C.	SCALE:	As Shown
DRAWN BY: D.R.A.	IN CHARGE: Ka	DATE:	Aug. 1957

PROJECT NO. I 89-2-(4) SHEET 147 OF 800

FED. ROAD DIV. No.	STATE	FEDERAL PROJECT No	SHEET	TOTAL SHEETS
	VERMONT	1008-21 ( )	148	800

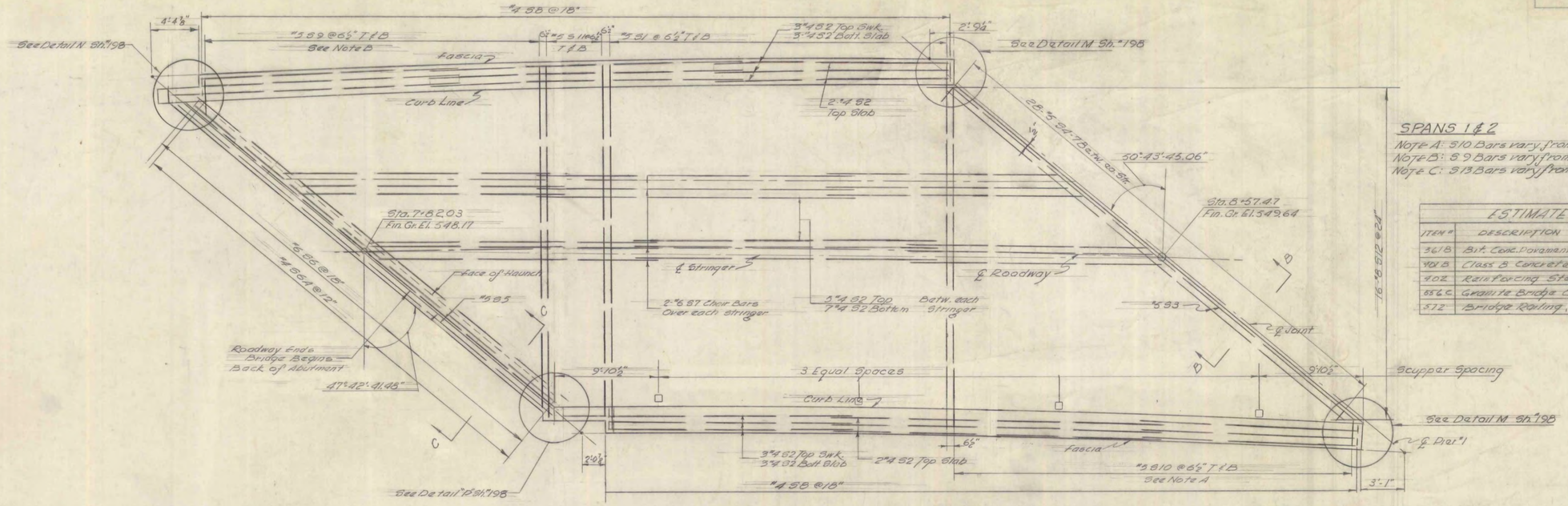

PLAN SPAN #1
Scale: 3/16" = 1'-0"

SPANS 1 & 2

Note A: S10 Bars vary from 2'-3" to 31'-11" in 3" increments.
Note B: S9 Bars vary from 3'-8" to 31'-11" in 6" increments.
Note C: S13 Bars vary from 2'-3" to 31'-11" in 4½" increments.

ESTIMATE OF QUANTITIES

ITEM #	DESCRIPTION	UNIT	SPAN #1 NEAT	SPAN #1 ROUND	SPAN #2 NEAT	SPAN #2 ROUND
361 B	Bit. Conc. Pavement (Mod)	Ton	28	32	28	32
401 B	Class B Concrete (Mod)	C.Y.	75	79	75	79
402	Reinforcing Steel	LB	15,845	-	16,388	-
656 C	Granite Bridge Curb	LF	156	-	150	-
572	Bridge Railing	LF	143	-	150	-

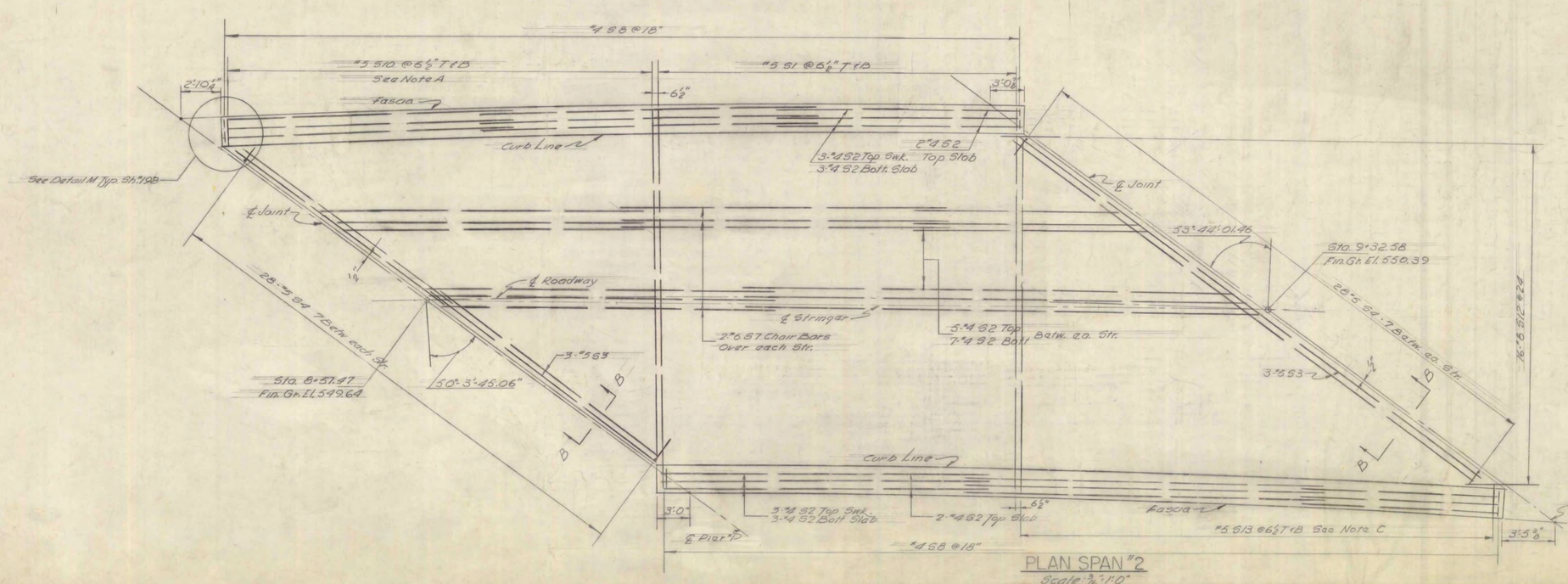

PLAN SPAN #2
Scale: 3/16" = 1'-0"

NOTE:
1. For General Notes See Sh. #145
2. For Scuppers See Detail "B" Sh. #197
3. For Curb See Detail "G" Sh. #198
4. For Typical Cross Section See Sh. #152
5. For Section B-B See Sh. #198
6. For Section C-C See Sh. #198
7. For Bridge Railing See Details "S" & "T" Sh. #198 & #199
8. Scupper Spacing May Be Changed in Field by Engineer.
9. No Scuppers Req'd for Span #2.

STATE OF VERMONT
DEPARTMENT OF HIGHWAYS

INTERSTATE PROJECT in the towns of
BERLIN - MONTPELIER - MIDDLESEX [redacted]
UNDERPASS-STA. 388+04.42 - STRUCTURE #5
REINFORCING PLAN SPANS 1 & 2

BOSWELL ENGINEERING CO.
CONSULTING ENGINEERS
RIDGEFIELD PARK, N.J.

SURVEYED BY VI	CHECKED BY A.J.L.	SCALE As Shown
DRAWN BY D.R.F.	IN CHARGE Ka	DATE Dec. 2010
PROJECT NO. 189-2-(4)	SHEET 148	OF 800

FED. ROAD DIV. No.	STATE	FEDERAL PROJECT No.	SHEET	TOTAL SHEETS
	VERMONT	I 89-2-1 ( )	149	800

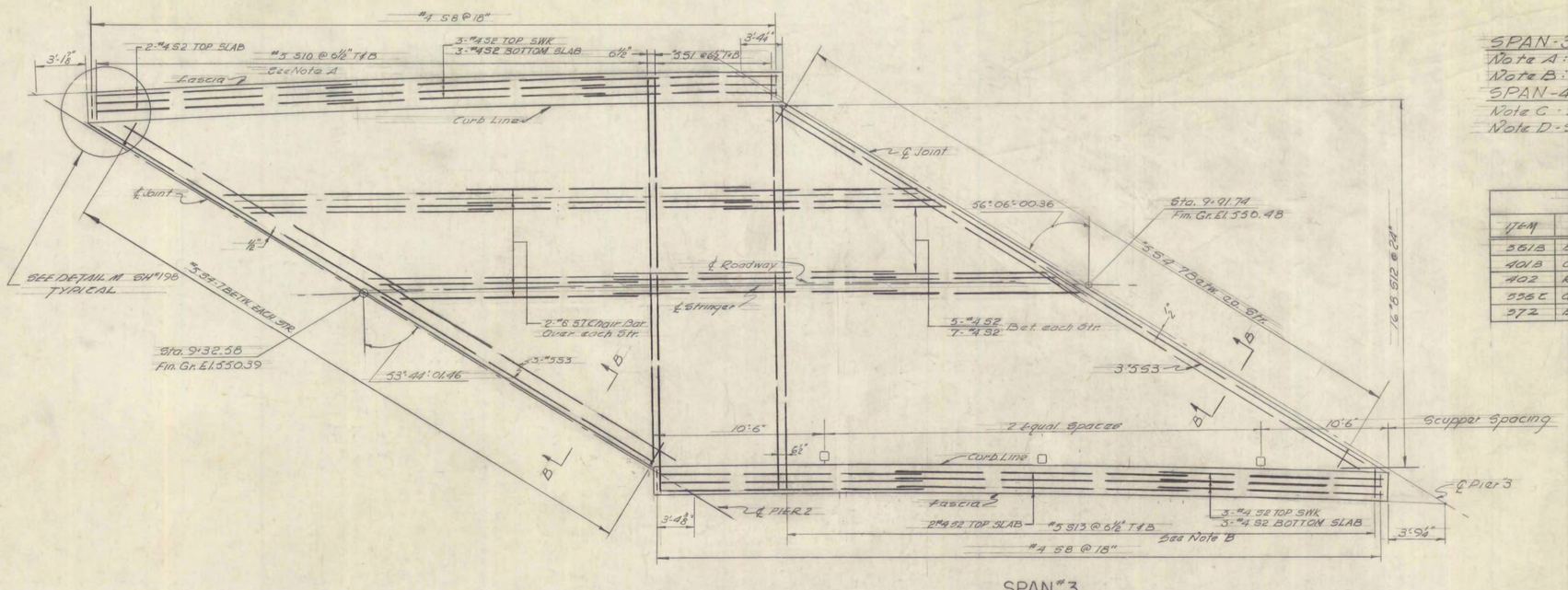

SPAN #3

Scale: 3/16" = 1'-0"

SPAN-3

Note A: S10 Bars Vary from 2'-3" to 31'-11" in 4½" Increments.

Note B: S13 Bars Vary from 2'-3" to 31'-11" in 3⅝" Increments.

SPAN-4

Note C - S10 Bars Vary from 2'-3" to 31'-11" in 3⅞" Increments

Note D - S13 Bars Vary from 2'-3" to 31'-11" in 3⅜" Increments

ESTIMATE OF QUANTITIES						
ITEM	DESCRIPTION	UNIT	SPAN 3		SPAN 4	
			NEAT	ROUND	NEAT	ROUND
361B	BITUMINOUS CONC. PAV'T. (MOD.)	TON	22	25	32	37
401B	CLASS B CONCRETE (MODIFIED)	C.Y.	59	62	87	92
402	REINFORCING STEEL	L.B.	12,128	-	18,095	-
556C	GRANITE BRIDGE CURB	L.F.	118	-	173	-
572	BRIDGE RAILING	L.F.	118	-	173	-

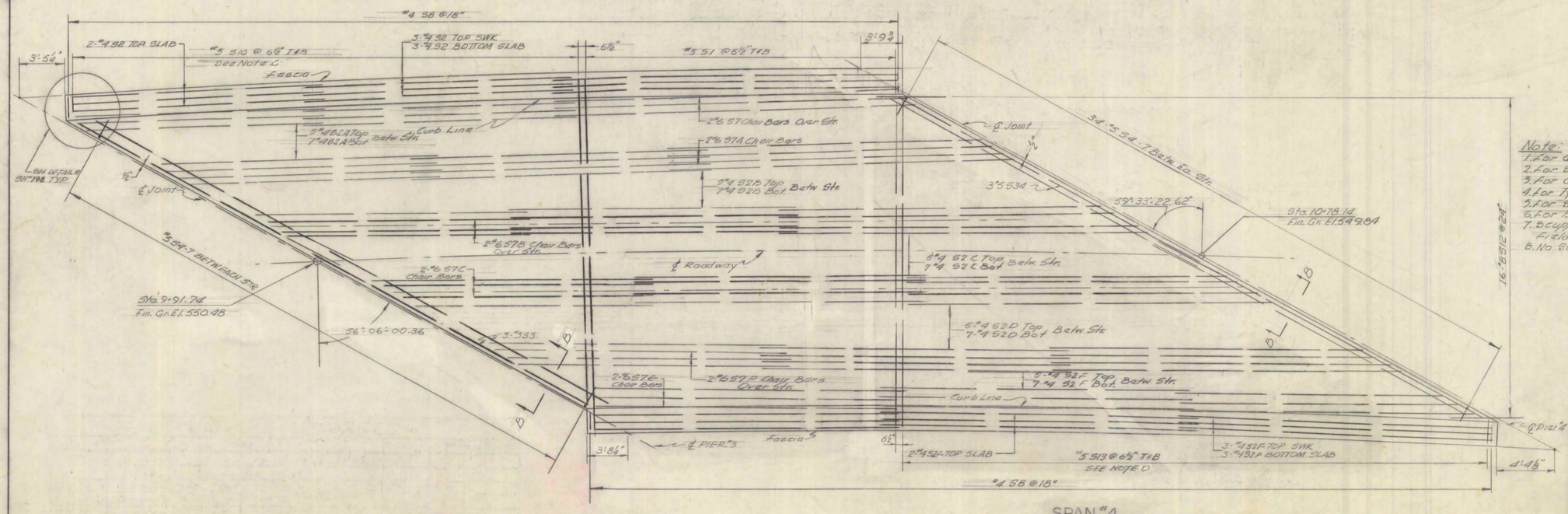

SPAN #4

Scale: 3/16" = 1'-0"

Note:
1. For General Notes See Sh. #146
2. For Scuppers See Detail 'B' Sh. #197
3. For Curb See Detail 'S' Sh. #198
4. For Typical Cross Section See Sh. #152
5. For Section B-B See Sh. #198
6. For Bridge Railing See Details 'S' & 'T' Sh. #198 & #199
7. Scupper Spacing May Be Changed in Field By Engineer.
8. No Scuppers Req'd for Span #4

STATE OF VERMONT
DEPARTMENT OF HIGHWAYS

INTERSTATE PROJECT in the towns of
BERLIN - MONTPELIER - MIDDLESEX

UNDER PASS - STA. 388+04.42 STRUCTURE #5
REINFORCING PLAN — SPANS #3 & #4

BOSWELL ENGINEERING CO.
CONSULTING ENGINEERS
RIDGEFIELD PARK, N.J.

SURVEYED BY V.I.	CHECKED BY A.J.L.	SCALE AS SHOWN
DRAWN BY D.R.R.	IN CHARGE K.A.	DATE AUG. 1957

PROJECT NO. I 89-2-(4) SHEET 149 OF 800

FED. ROAD DIV. No.	STATE	FEDERAL PROJECT No.	SHEET	TOTAL SHEETS
	VERMONT	1002-2(1)	150	800

SPAN-5
Note A S10 Bars Vary from 2'-3" to 31'-11" in 3 7/8" Increments
Note B S13 Bars Vary from 2'-3" to 31'-11" in 3 1/2" Increments

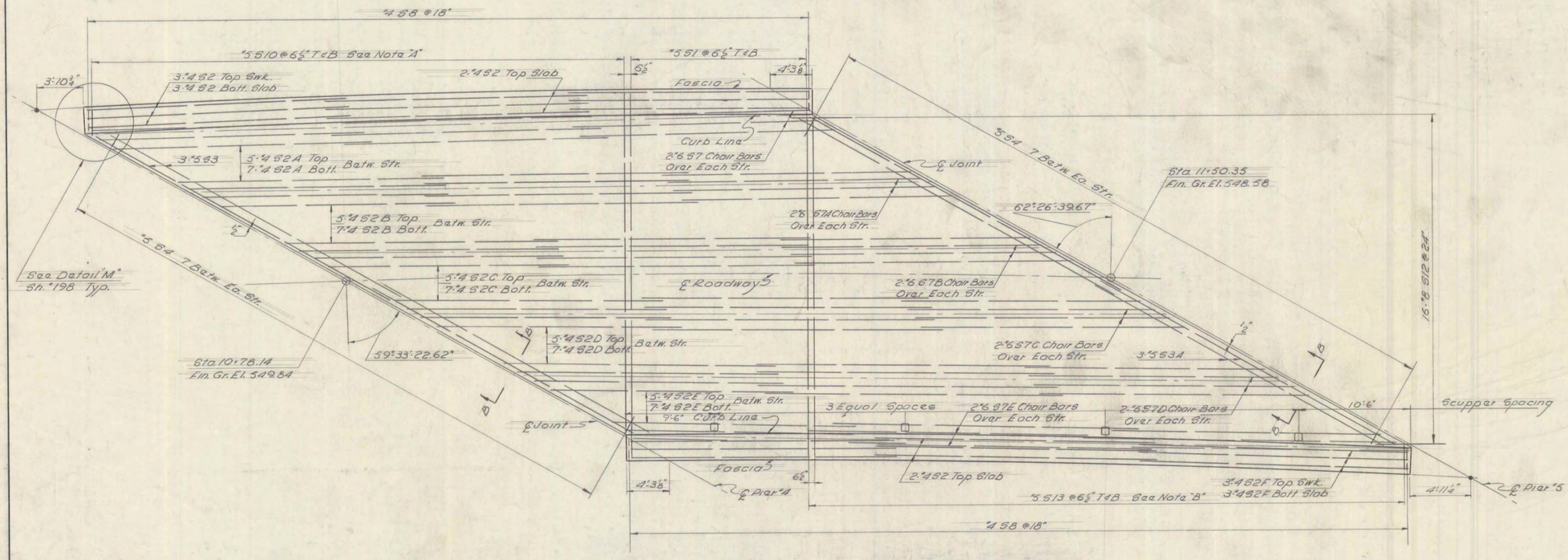

SPAN 5
Scale: 3/16" = 1'-0"

NOTE:
1. For General Notes See Sh. "145
2. For Scuppers See Detail "B" Sh. "197
3. For Curb See Detail "S" Sh. "198
4. For Typical Cross Section See Sh. "152
5. For Section B-B See Sh. "198
6. For Section C-C See Sh. "198
7. For Bridge Railing See Details 3 & 7 Sh. "198 & 199
8. Scupper Spacing May Be Changed in the Field by the Engineer.

ESTIMATE OF QUANTITIES

ITEM	DESCRIPTION	UNIT	SPAN 5 NEAT	SPAN 5 ROUND
361B	Bituminous Concrete Pavement (Mod)	Ton	27	31
401B	Class "B" Concrete (Mod.)	C.Y.	73	77
402	Reinforcing Steel	Lb.	15,704	-
556C	Granite Bridge Curb	L.F.	144	-
572	Bridge Railing	L.F.	144	-

STATE OF VERMONT
DEPARTMENT OF HIGHWAYS

INTERSTATE PROJECT in the towns of
BERLIN - MONTPELIER - MIDDLESEX
UNDERPASS STA. 388+04.42 STRUCTURE "5
REINFORCING PLAN - SPAN "5

BOSWELL ENGINEERING CO.
CONSULTING ENGINEERS
RIDGEFIELD PARK, N. J.

SURVEYED BY V.I. | CHECKED BY M.J.C. | SCALE As Shown
DRAWN BY D.R.F. | IN CHARGE K.A. | DATE Aug. 1957

PROJECT NO. I 89-2-(4) | SHEET 150 OF 800

FED. ROAD DIV. NO.	STATE	FEDERAL PROJECT NO.	SHEET	TOTAL SHEETS
	VERMONT	189-2(4)	151	800

SPAN 6
- Note A: 5S10 Bars vary from 2'-3" to 29'-0" in 3¼" increments.
- Note B: 5S13 Bars vary from 2'-3" to 29'-0" in 3" increments

SPAN 7
- Note C: 6S10 Bars vary from 2'-3" to 31'-11" in 3" increments
- Note D: 6S13 Bars vary from 2'-3" to 31'-11" in 6⅝" increments.

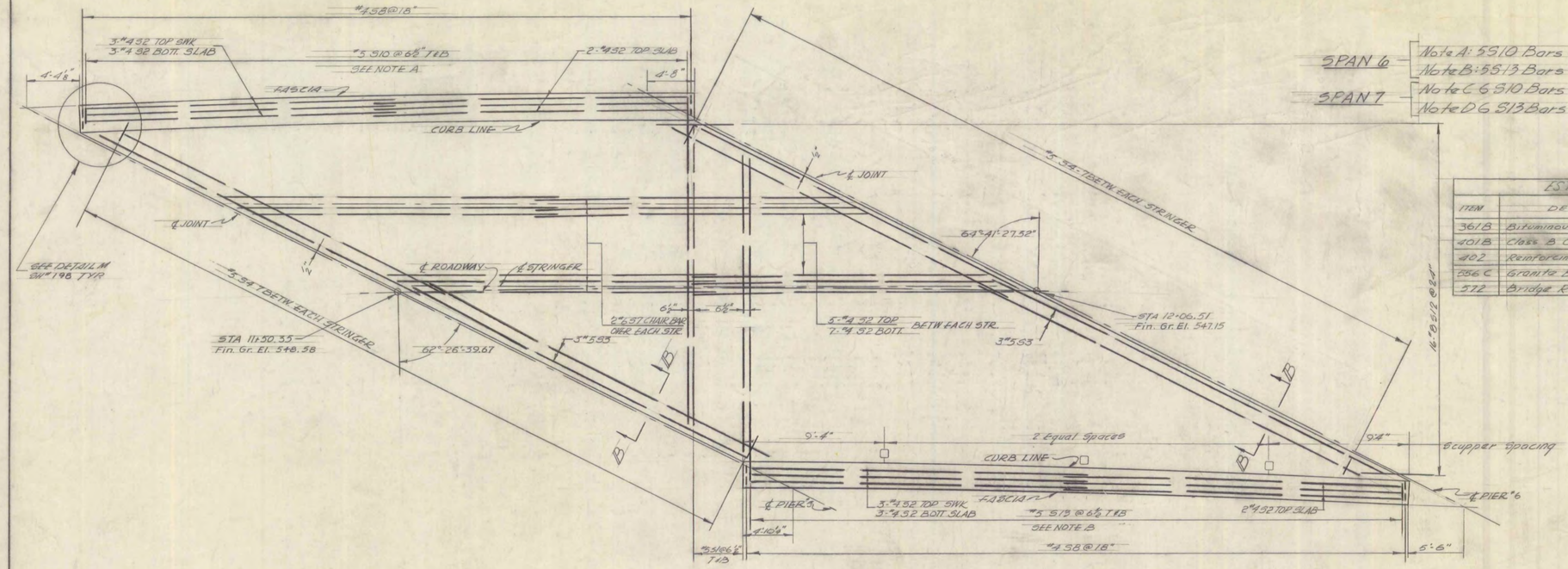

SPAN #6
Scale: 3/16" = 1'-0"

ESTIMATE OF QUANTITIES

ITEM	DESCRIPTION	UNIT	SPAN #6 NEAT	SPAN #6 ROUND	SPAN #7 NEAT	SPAN #7 ROUND
361B	Bituminous Concrete Pavement (Mod)	Ton	21	24	30	34
401B	Class B Concrete - Modified	C.Y.	53	58	79	83
402	Reinforcing Steel	LB.	11,489	-	14,114	-
856 C	Granite Bridge Curb	L.F.	112	-	159	-
572	Bridge Railing	L.F.	112	-	159	-

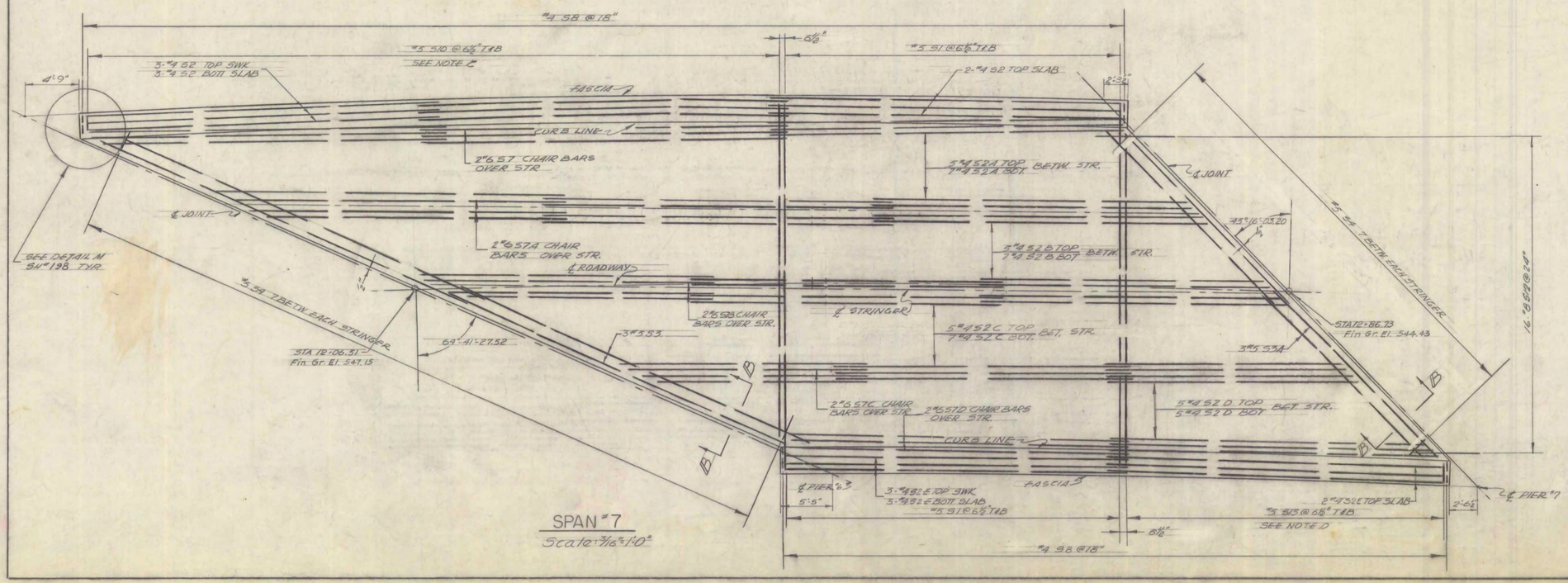

SPAN #7
Scale: 3/16" = 1'-0"

Note:
1. For General Notes See Sh. #145
2. For Scupper See Detail "B" Sh. #197
3. For Curb See Detail "B" Sh. #198
4. For Typical Cross Section See Sh. #152
5. For Section B-B See Sh. #198
6. For Bridge Railing See Details "S" & "T" Sh. #198 & #199
7. Scupper Spacing May Be Changed in Field By Engineer
8. No Scuppers Req'd for Span #7

STATE OF VERMONT
DEPARTMENT OF HIGHWAYS

INTERSTATE PROJECT in the towns of
BERLIN - MONTPELIER - MIDDLESEX

UNDER PASS - STA. 388+04.42 - STRUCTURE #5

REINFORCING PLAN SPANS #6 & #7

BOSWELL ENGINEERING CO.
CONSULTING ENGINEERS
RIDGEFIELD PARK, N. J.

SURVEYED BY	CHECKED BY	SCALE
DRAWN BY V.F. D.R.P.	IN CHARGE A.L.K. K.A.	AS SHOWN
PROJECT NO. 189-2(4)	SHEET 151 OF 800	DATE AUG. 1957

FED. ROAD DIV. No.	STATE	FEDERAL PROJECT No.	SHEET	TOTAL SHEETS
	VERMONT	I 002-2(1)	152	800

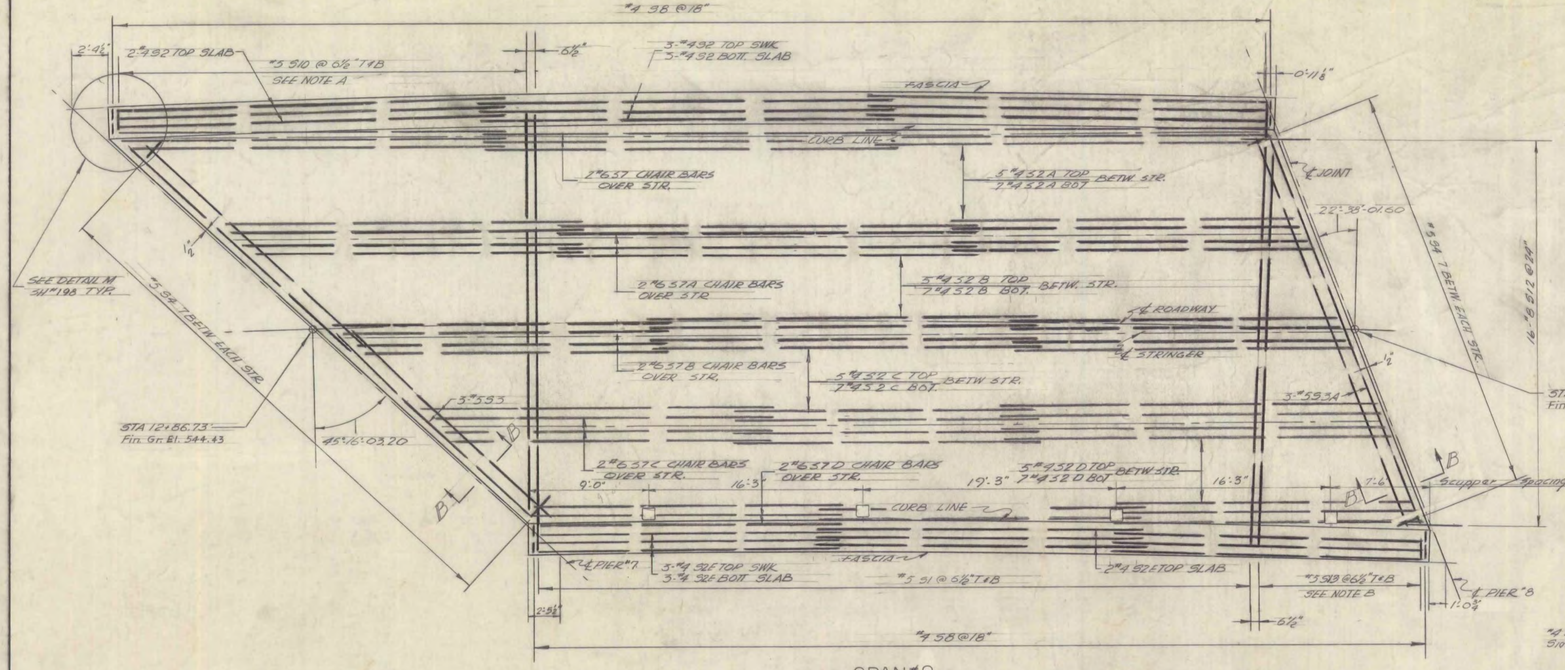

SPAN #8
Scale: 3/16" = 1'-0"

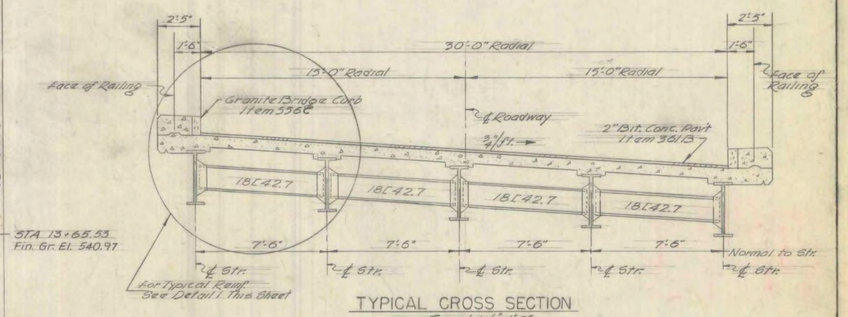

TYPICAL CROSS SECTION
Scale: 3/4" = 1'-0"

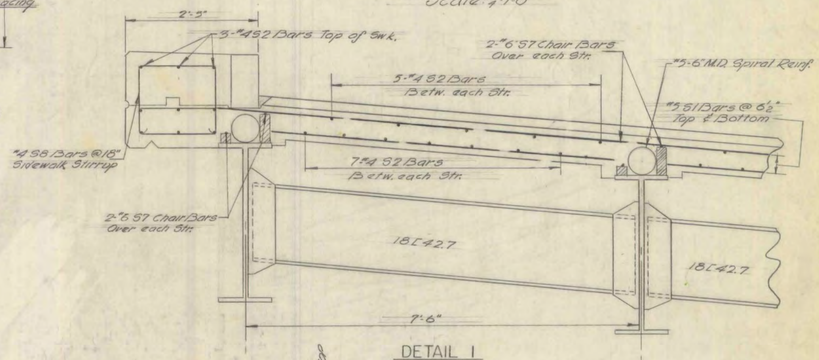

DETAIL I
Scale: 3/4" = 1'-0"

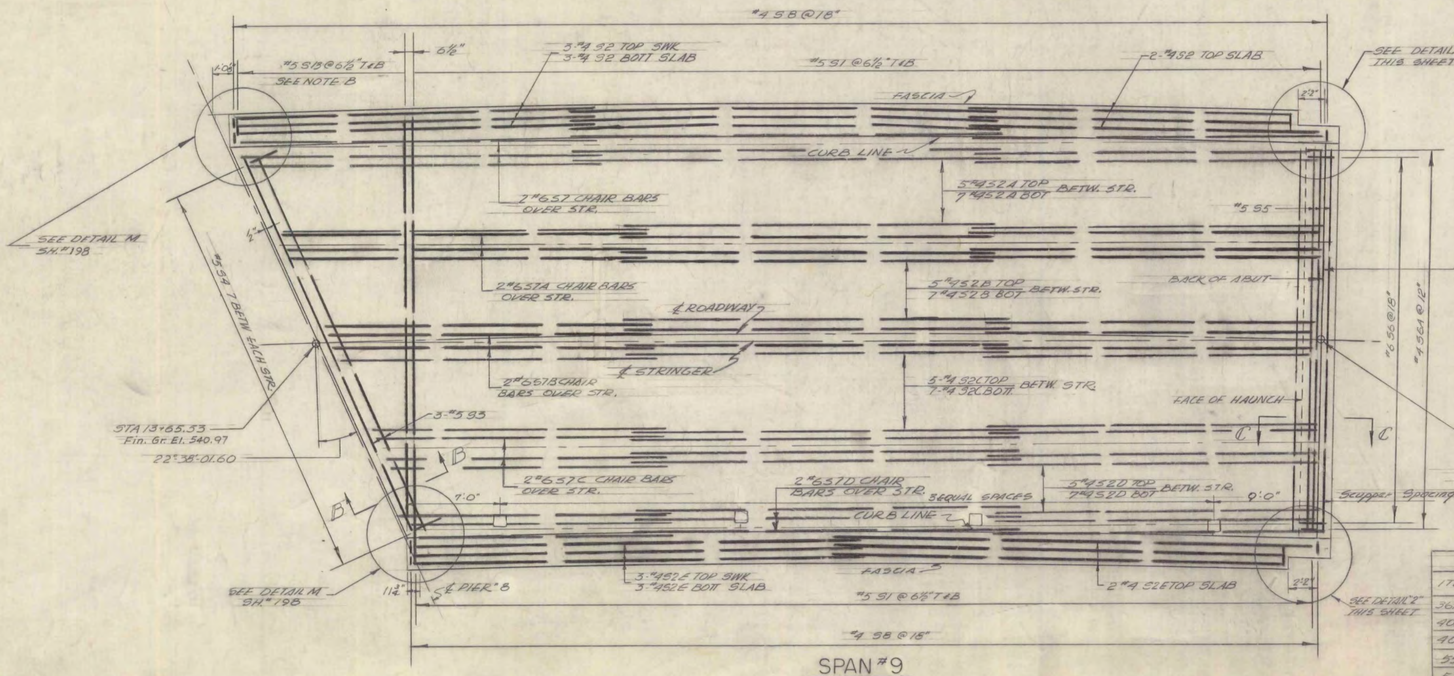

SPAN #9
Scale: 3/16" = 1'-0"

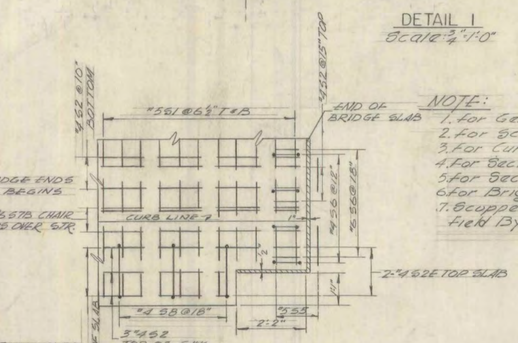

DETAIL 2
Scale: 1/2" = 1'-0"

NOTE:
1. For General Notes See Sh. #145
2. For Scuppers See Detail "B" Sh. #197
3. For Curb See Detail "B" Sh. #198
4. For Section B-B See Sh. #198
5. For Section C-C See Sh. #198
6. For Bridge Railing See Details "S" & "T" Sh. #198 & #199
7. Scupper Spacing May Be Changed in Field By Engineer.

SPANS 8 & 9
Note A: S10 Bars vary from 2'-11" to 31'-11" in 6" increments.
Note B: S13 Bars vary from 2'-11" to 31'-11" in 15⅝" increments.

ESTIMATE OF QUANTITY

ITEM	DESCRIPTION	UNIT	SPAN #8 NEAT	SPAN #8 ROUND	SPAN #9 NEAT	SPAN #9 ROUND
361B	Bituminous Conc. Pav't. (Mod)	Ton	29	34	28	32
401B	Class B Concrete (Modified)	CY	79	83	74	78
402	Reinforcing Steel	LB.	14,155	-	15,455	-
536C	Granite Bridge Curb	LF.	157	-	151	-
572	Bridge Railing	LF.	127	-	125	-

STATE OF VERMONT
DEPARTMENT OF HIGHWAYS

INTERSTATE PROJECT in the towns of
BERLIN - MONTPELIER - MIDDLESEX
UNDER PASS-STA. 388+04.42 - STRUCTURE #5

REINFORCING PLAN - SPANS #8 & 9

BOSWELL ENGINEERING CO.
CONSULTING ENGINEERS
RIDGEFIELD PARK, N.J.

SURVEYED BY	CHECKED BY	SCALE
DRAWN BY D.R.F.	IN CHARGE K.A.	DATE AUG. 1982

PROJECT NO. I 89-2-(4) SHEET 152 OF 800

FED. ROAD DIV. NO.	STATE	FEDERAL PROJECT NO.	SHEET	TOTAL SHEETS
	VERMONT	I002-2(1)	153	800

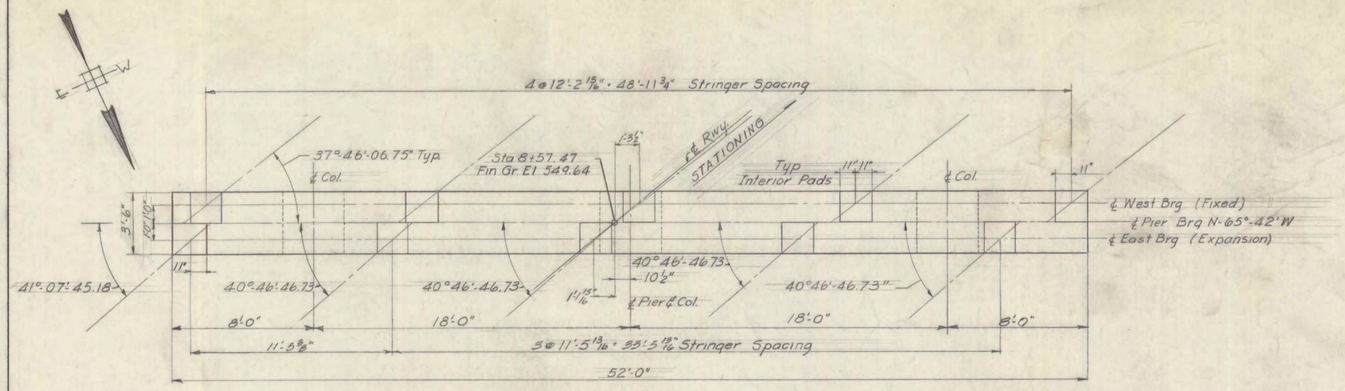

PLAN
Scale 1/4" = 1'-0"

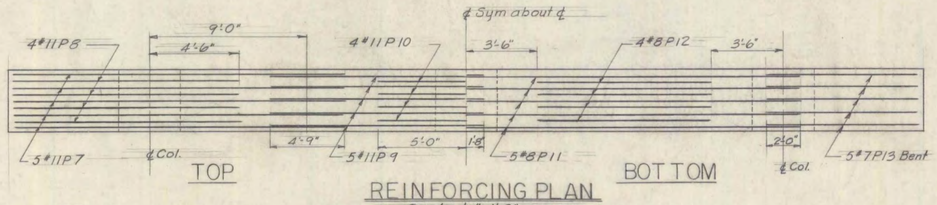

TOP

BOTTOM

REINFORCING PLAN
Scale 1/4" = 1'-0"

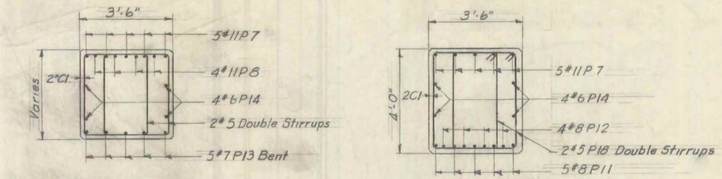

SECTION A A
Scale 3/8" = 1'-0"

SECTION BB
Scale 3/8" = 1'-0"

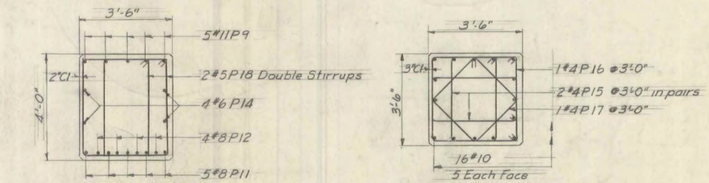

SECTION CC
Scale 3/8" = 1'-0"

SECTION DD
Scale 3/8" = 1'-0"

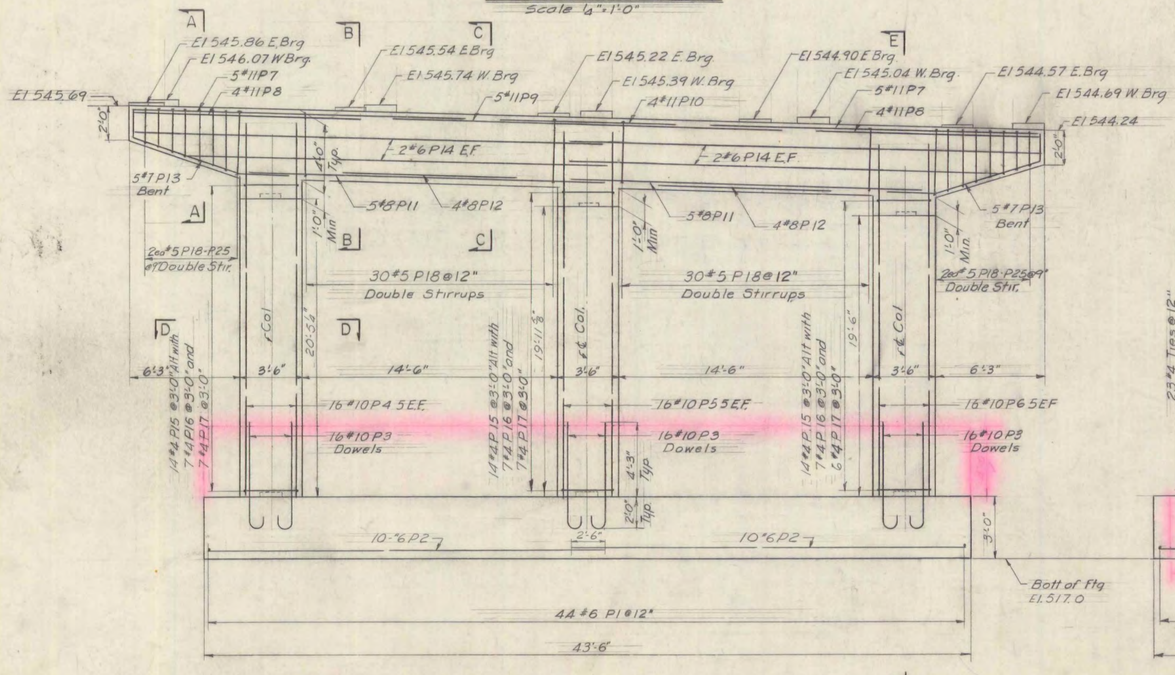

ELEVATION
Scale 1/4" = 1'-0"

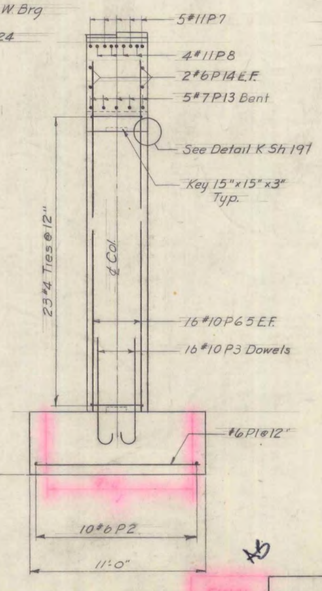

SECTION EE
Scale 1/4" = 1'-0"

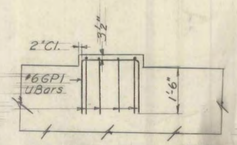

DETAIL PAD REINFORCING
For Pads exceeding 3" in height
Scale 1/2" = 1'-0"

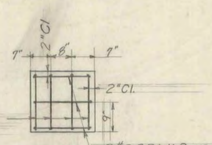

PLAN
Scale 1/2" = 1'-0"

NOTE:

1. For General Notes See Sh # 145
2. For Bearing Devices & Anchor Bolts See Detail "E" Sh # 197
3. Reinforcing in top of pier shall be spaced to pass Anchor Bolts maintaining minimum spacing requirements

ESTIMATE OF QUANTITIES

Final	ITEM	DESCRIPTION	UNIT	NEAT	ROUND
190	107	Structure Excavation	CY	172	190
112	401B	Class B Concrete (Mod.)	CY	107	112
14,100	402	Reinforcing Steel	LB	13,670	—
20	407	Asphaltic Asbestos Coating	SY	18	—
1,590.4	[illegible]	[illegible]	[illegible]	[illegible]	[illegible]

STATE OF VERMONT
DEPARTMENT OF HIGHWAYS

INTERSTATE PROJECT in the towns of
BERLIN - MONTPELIER - MIDDLESEX

UNDERPASS STA 388+04.42 STR. #5

PIER # 1 DETAILS

BOSWELL ENGINEERING CO.
CONSULTING ENGINEERS
ROSELFIELD PARK, N. J.

SURVEYED BY VT | DRAWN BY RAB | CHECKED BY mjc | IN CHARGE Ka | SCALE AS SHOWN | DATE Aug 1957

PROJECT NO. I 89-2-(4) | SHEET 153 OF 800

FED. ROAD DIV. No.	STATE	FEDERAL PROJECT No.	SHEET	TOTAL SHEETS
	VERMONT	1002-2(1)	154	800

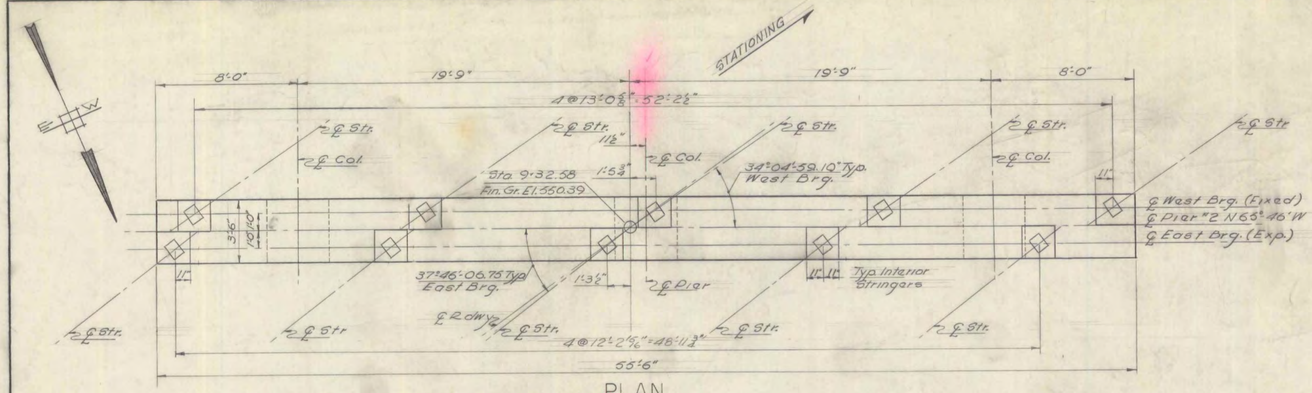

PLAN
Scale: 1/4" = 1'-0"

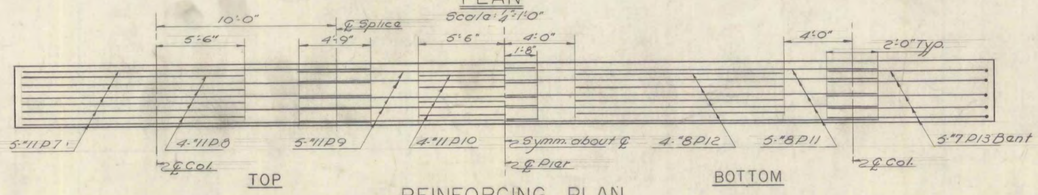

REINFORCING PLAN
Scale: 1/4" = 1'-0"

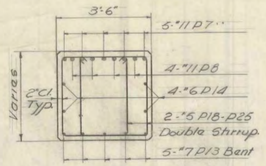

SECTION A-A
Scale: 3/8" = 1'-0"

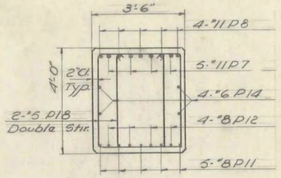

SECTION B-B
Scale: 3/8" = 1'-0"

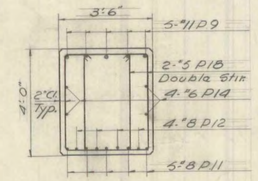

SECTION C-C
Scale: 3/8" = 1'-0"

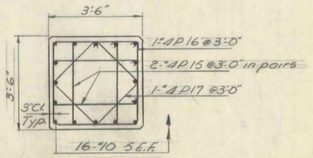

SECTION D-D
Scale: 3/8" = 1'-0"
(Typ. all columns)

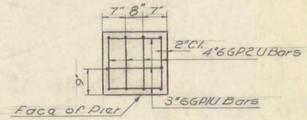

PLAN

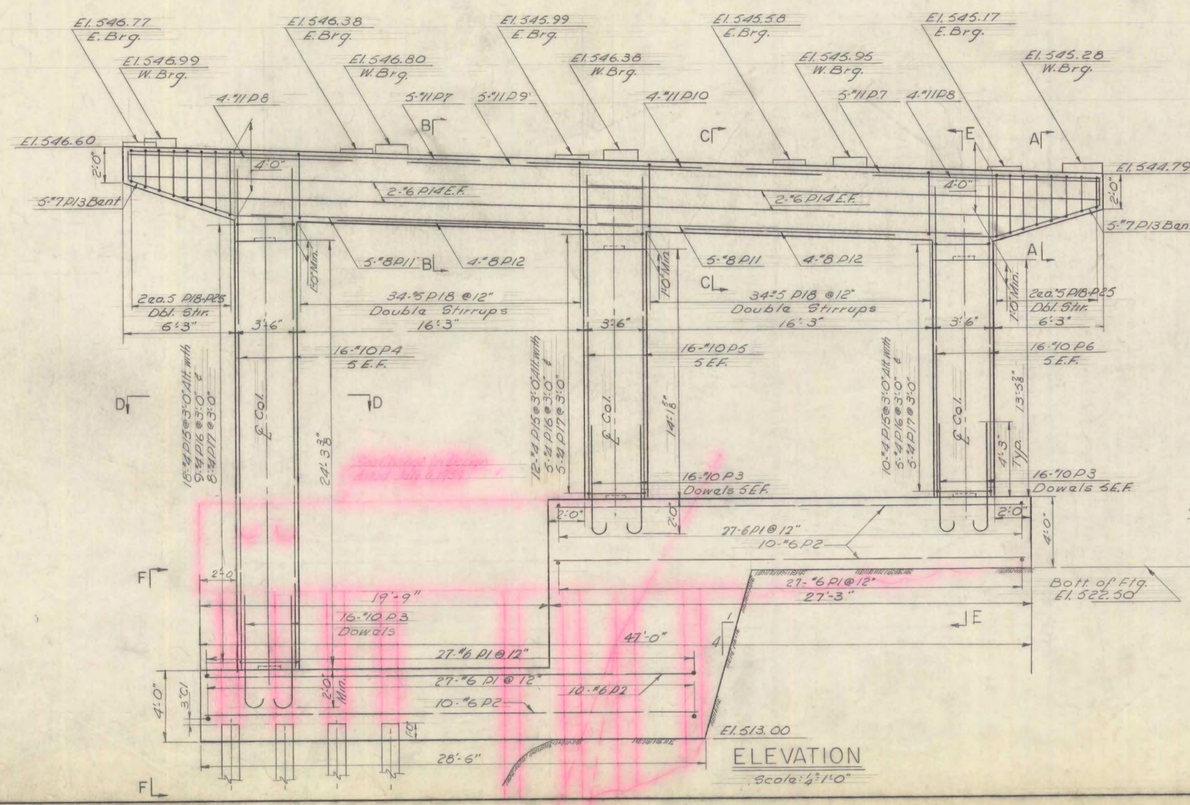

ELEVATION
Scale: 1/4" = 1'-0"

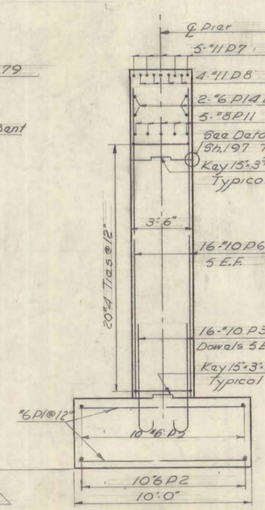

SECTION E-E
Scale: 1/4" = 1'-0"

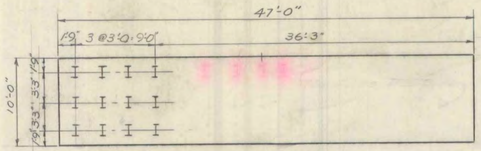

PILE PLAN
Scale: 1/8" = 1'-0"

Est. Pile Length = 30'-0"

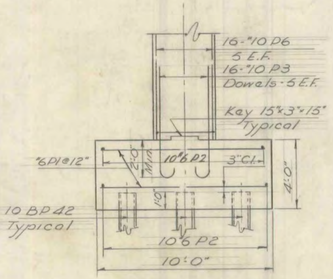

SECTION F-F
Scale: 1/4" = 1'-0"

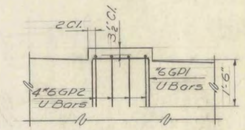

DETAIL - PAD REINFORCING
For Pads Exceeding 3" in Height
Scale: 1/2" = 1'-0"

NOTE:

1. For General Notes See Sh. #145
2. For Bearing Devices and Anchor Bolts See Detail "E" Sh. #197
3. Reinforcing in top of Pier Cap shall be spaced to pass Anchor Bolts, maintaining minimum spacing requirements.
4. Maximum allowable pile load = 35 tons
5. Piles to be driven to bear on rock.

ESTIMATE OF QUANTITIES

Item #	Description	Unit	Neat	Round
107	Structure Excavation	C.Y.	217	239
401B	Class B Concrete (Mod.)	C.Y.	151	165
402	Reinforcing Steel	Lb.	13,562	—
407	Asphaltic Asbestos Coating	S.Y.	20	—
504	Steel Piling 10 BP 42	L.F.	360	—

STATE OF VERMONT
DEPARTMENT OF HIGHWAYS

INTERSTATE PROJECT in the towns of
BERLIN - MONTPELIER - MIDDLESEX
UNDERPASS STA. 388+04.42 STRUCTURE "S"
PIER #2 DETAILS

BOSWELL ENGINEERING CO.
CONSULTING ENGINEERS
RIDGEFIELD PARK, N.J.

SURVEYED BY VT	CHECKED BY MJC	SCALE As Shown
DRAWN BY DRS	IN CHARGE RR	DATE Aug. 1957

PROJECT NO. 180-2(4) SHEET 154 OF 800

FED. ROAD DIV. No.	STATE	FEDERAL PROJECT No.	SHEET	TOTAL SHEETS
	VERMONT	2002-2(1)	155	800

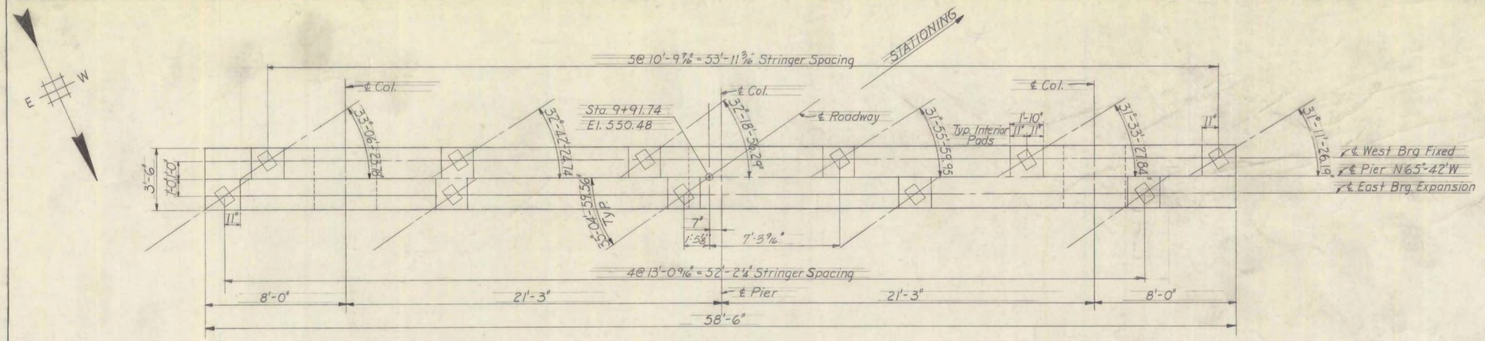

PLAN
Scale: 1/4" = 1'-0"

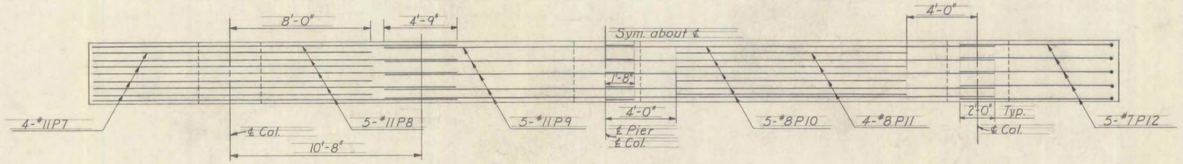

REINFORCING PLAN
Scale: 1/4" = 1'-0"

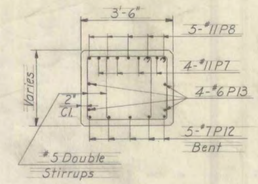

SECTION A-A
Scale: 3/8" = 1'-0"

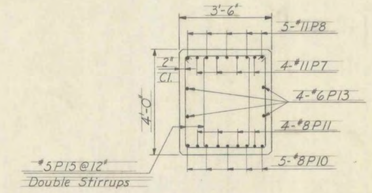

SECTION B-B
Scale: 3/8" = 1'-0"

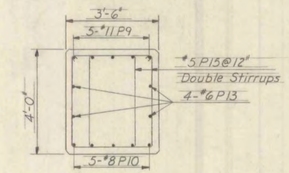

SECTION C-C
Scale: 3/8" = 1'-0"

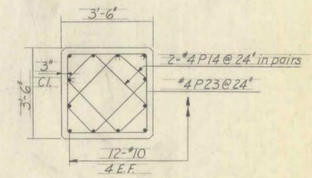

SECTION D-D
Scale: 3/8" = 1'-0"
(Typical All Columns)

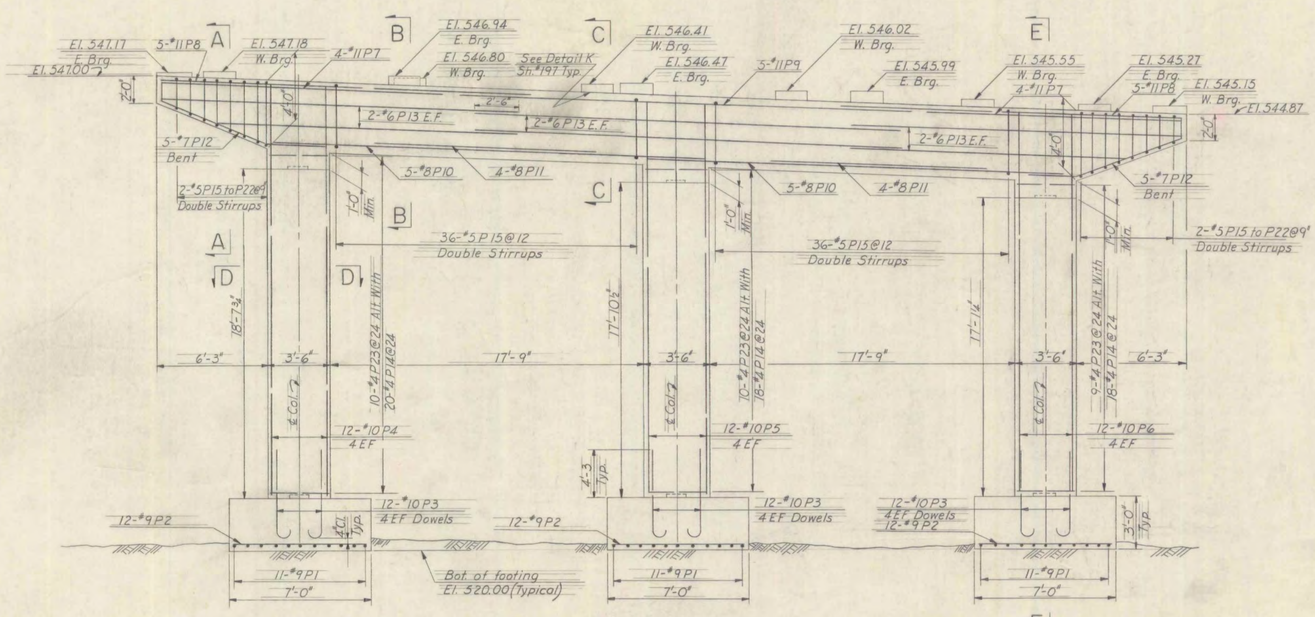

ELEVATION
Scale: 1/4" = 1'-0"

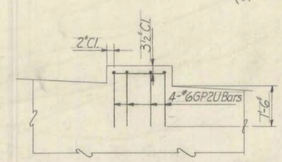

DETAIL - PAD REINFORCING
(For Pads Exceeding 3" in Height)
Scale: 1/2" = 1'-0"

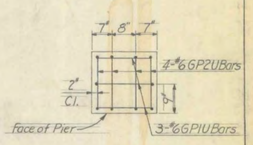

PLAN
Scale: 1/2" = 1'-0"

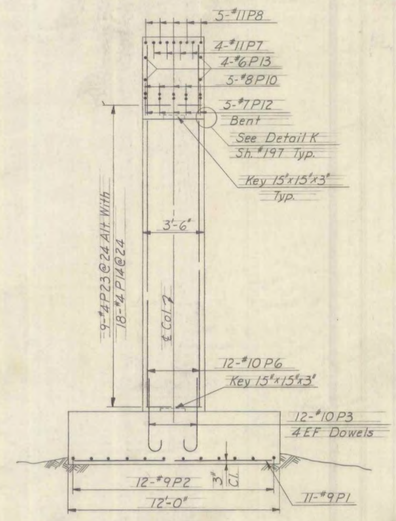

SECTION E-E
Scale: 1/4" = 1'-0"

NOTES:

1. For General Notes See Sh. #145.
2. For bearing devices and anchor bolts See Detail "E" Sh. #197.
3. Reinforcing for top of pier cap shall be spaced to pass anchor bolts maintaining minimum spacing requirements.

ESTIMATE OF QUANTITIES

ITEM	DESCRIPTION	UNIT	NEAT	ROUND
107	Structure Excavation	C.Y.	42	46
401-B	Class B Conc. (Mod.)	C.Y.	83	87
402	Reinforcing Steel	L.B.	13,133	—
407	Asphaltic Asbestos Coat.	S.Y.	20	—

STATE OF VERMONT
DEPARTMENT OF HIGHWAYS

INTERSTATE PROJECT in the towns of
BERLIN - MONTPELIER - MIDDLESEX

UNDERPASS STA. 388+04.42 STR. #5

PIER #3 DETAILS

BOSWELL ENGINEERING CO.
CONSULTING ENGINEERS
RIDGEFIELD PARK, N. J.

SURVEYED BY N.T.	CHECKED BY M.J.C.	SCALE	As Shown
DRAWN BY G.K.	IN CHARGE Ko	DATE	Aug., 1957

PROJECT NO. 189-2(14) SHEET 155 OF 800

FED. ROAD DIV. NO.	STATE	FEDERAL PROJECT NO.	SHEET	TOTAL SHEETS
	VERMONT	2002-2(4)	156	800

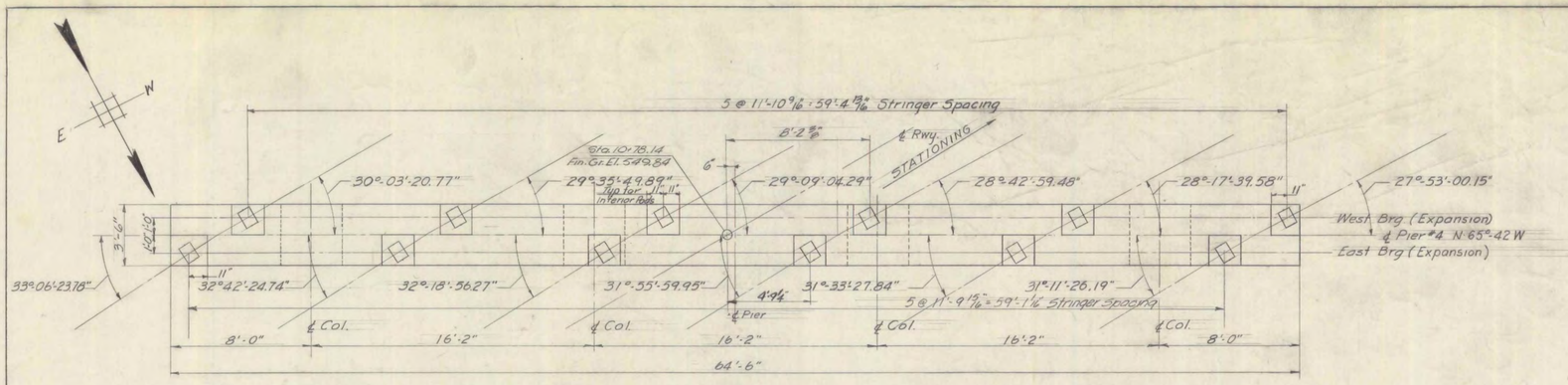

PLAN
Scale 1/4" = 1'-0"

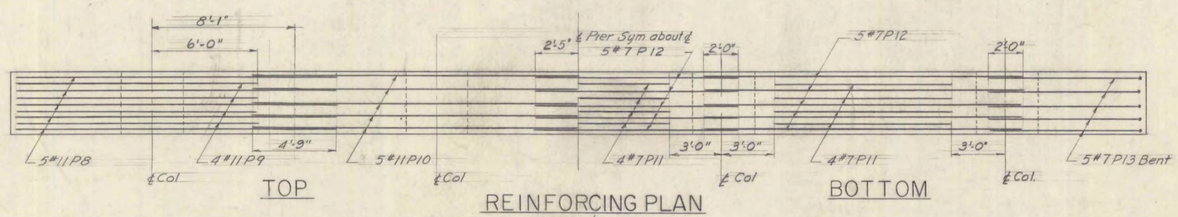

TOP

REINFORCING PLAN
Scale 1/4" = 1'-0"

BOTTOM

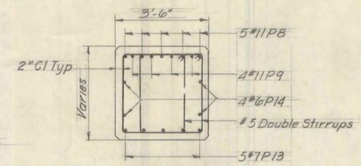

SECTION A A
Scale 3/8" = 1'-0"

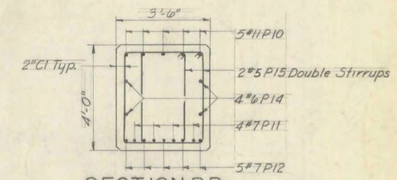

SECTION B B
Scale 3/8" = 1'-0"

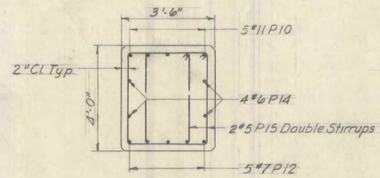

SECTION C C
Scale 3/8" = 1'-0"

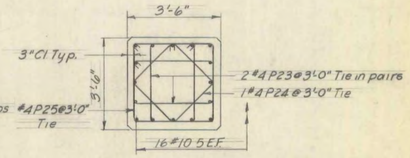

SECTION D D
Scale 3/8" = 1'-0"

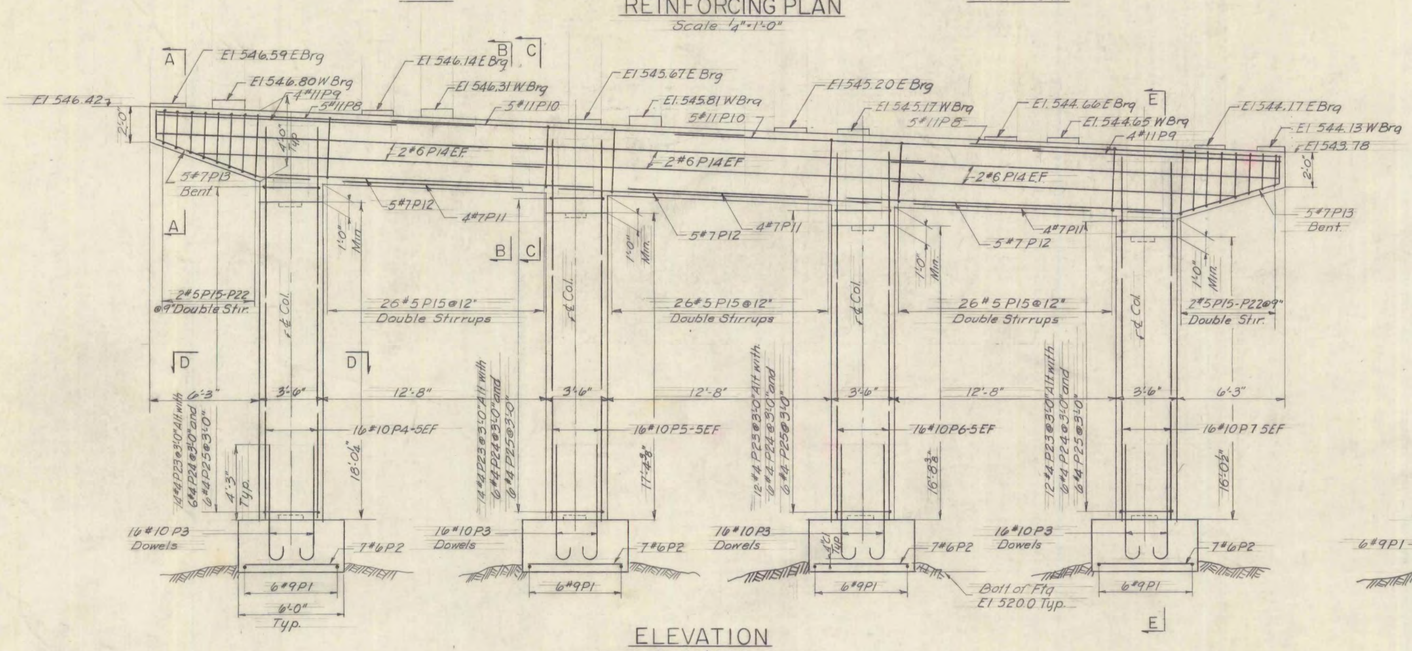

ELEVATION
Scale 1/4" = 1'-0"

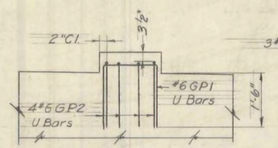

DETAIL OF PAD REINFORCING
For pads exceeding 3" in height
Scale 1/2" = 1'-0"

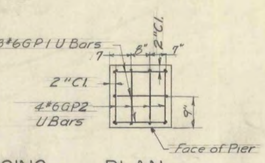

PLAN
Scale 1/2" = 1'-0"

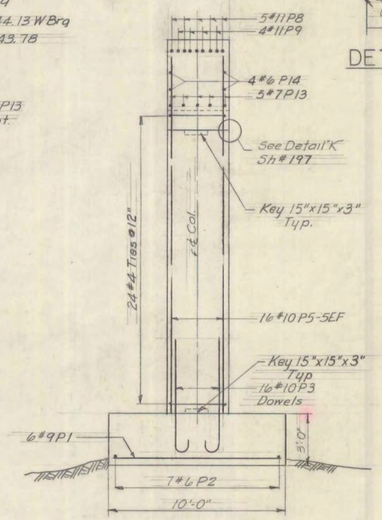

SECTION E E
Scale 1/4" = 1'-0"

NOTE:

1. For General Notes See Sheet # 145
2. For Bearing Devices & Anchor Bolts See Detail "E" Sh # 197
3. Reinforcing in top of Cap shall be spaced to pass Anchor Bolts maintaining minimum spacing requirements

ESTIMATE OF QUANTITIES

ITEM	DESCRIPTION	UNIT	NEAT	ROUND
107	Structure Excavation	C.Y.	43	47
401B	Class B Concrete (Modified)	C.Y.	92	97
402	Reinforcing Steel	L.B.	15,360	—
407	Asphaltic Asbestos Coating	S.Y.	23	—

STATE OF VERMONT
DEPARTMENT OF HIGHWAYS

INTERSTATE PROJECT in the towns of
BERLIN - MONTPELIER - MIDDLESEX

UNDERPASS STA 388+04.42 STR # 5

PIER # 4 DETAILS

BOSWELL ENGINEERING CO.
CONSULTING ENGINEERS
RIDGEFIELD PARK, N.J.

SURVEYED BY V.T.	CHECKED BY mgc	SCALE AS SHOWN
DRAWN BY R.A.B.	IN CHARGE RB	DATE Aug. 1957

PROJECT NO. 189-2-(4) SHEET 156 OF 800

FED. ROAD DIV. NO.	STATE	FEDERAL PROJECT NO.	SHEET	TOTAL SHEETS
	VERMONT	180-2(4)	157	800

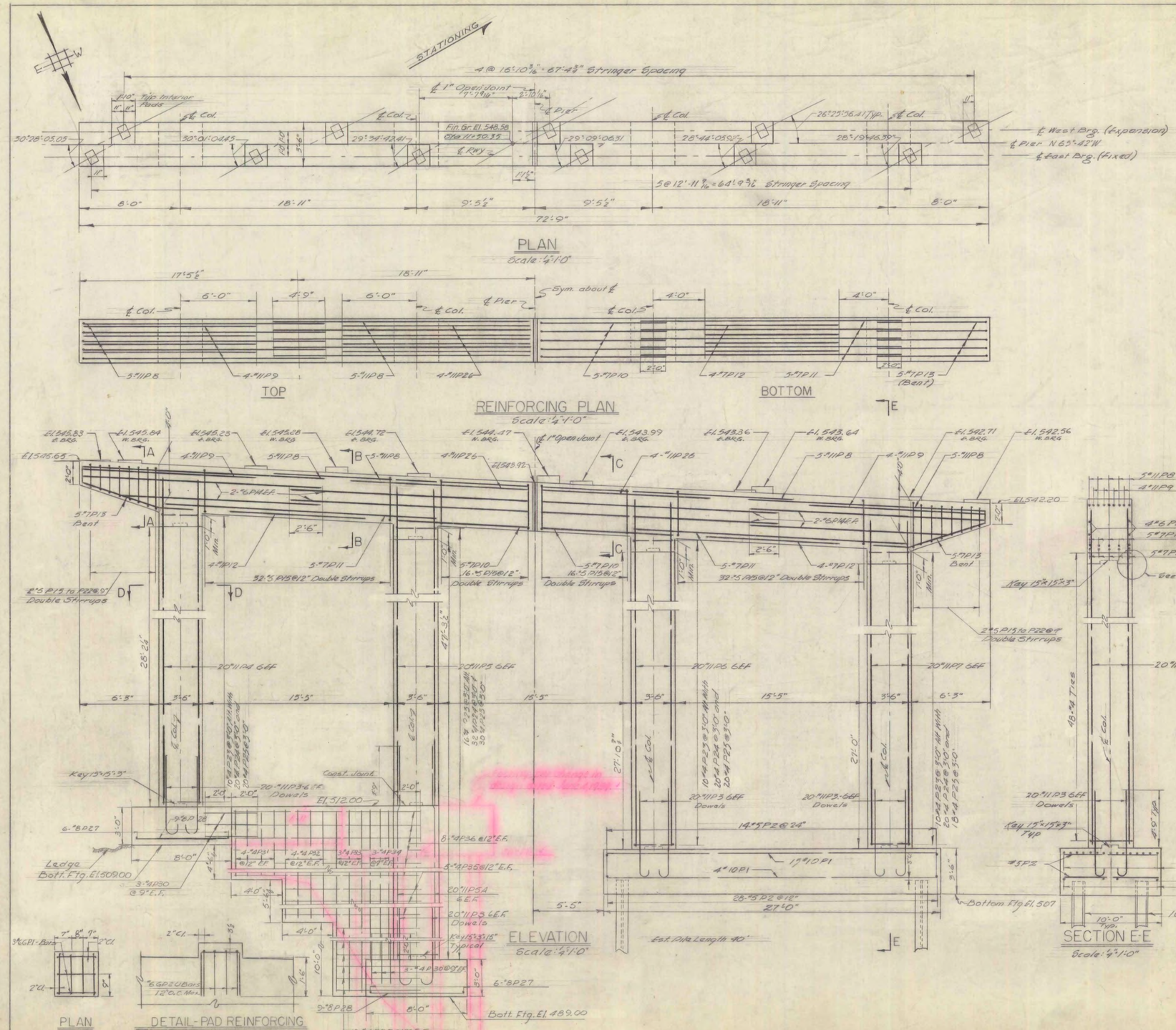

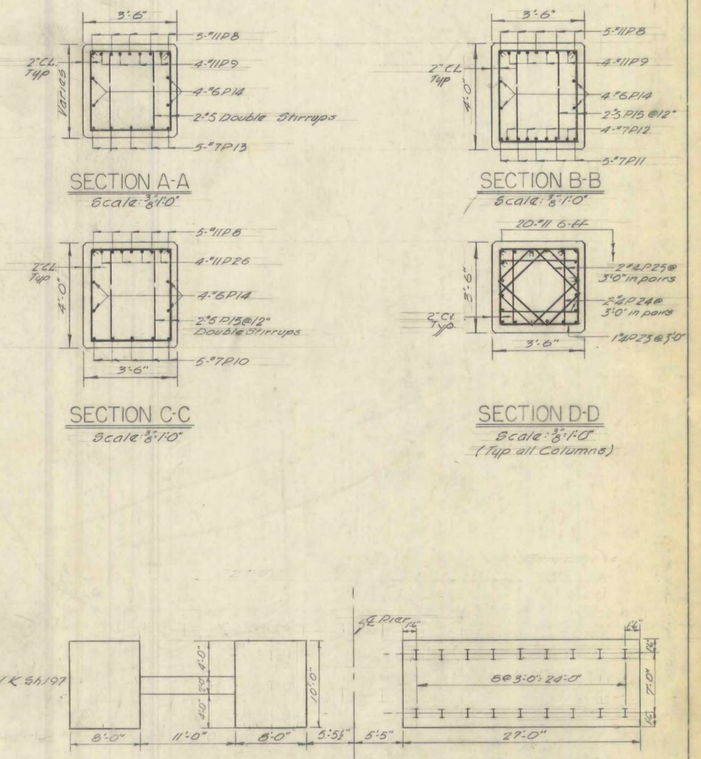

NOTE:
1. For General Notes See Sh. 145
2. For Bearing Devices & Anchor Bolts See Detail E Sh. 197
3. Reinforcing in top of cap shall be spaced to pass Anchor Bolts maintaining minimum spacing requirements
4. Maximum allowable pile load equals 35 tons.
5. Piles to be driven to bear on rock

ESTIMATE of QUANTITIES				
ITEM	DESCRIPTION	UNIT	NEAT	ROUND
107	Structure Excavation	C.Y.	244	269
401B	Class B Concrete Modified	C.Y.	165	173
402	Reinforcing Steel	LB.	32,144	—
407	Asphaltic Asbestos Coating	S.Y.	27	—
504	Steel Piling 10BP42	L.F.	720	—

STATE OF VERMONT
DEPARTMENT OF HIGHWAYS

INTERSTATE PROJECT in the towns of
BERLIN - MONTPELIER - MIDDLESEX

UNDERPASS STA 388.04 42 STR. # 5

PIER # 5 DETAILS

BOSWELL ENGINEERING CO.
CONSULTING ENGINEERS
ROGERSFIELD PARK, N. J.

SURVEYED BY V.T.	CHECKED BY M.J.C.	SCALE	1/8" = 1'-0"
DRAWN BY D.R.F.	IN CHARGE R.A.	DATE	AUG. 1957

PROJECT NO. 180-2-(4) SHEET 157 OF 800

FED. ROAD DIV. No.	STATE	FEDERAL PROJECT No.	SHEET	TOTAL SHEETS
	VERMONT	I 002-2(1)	158	800

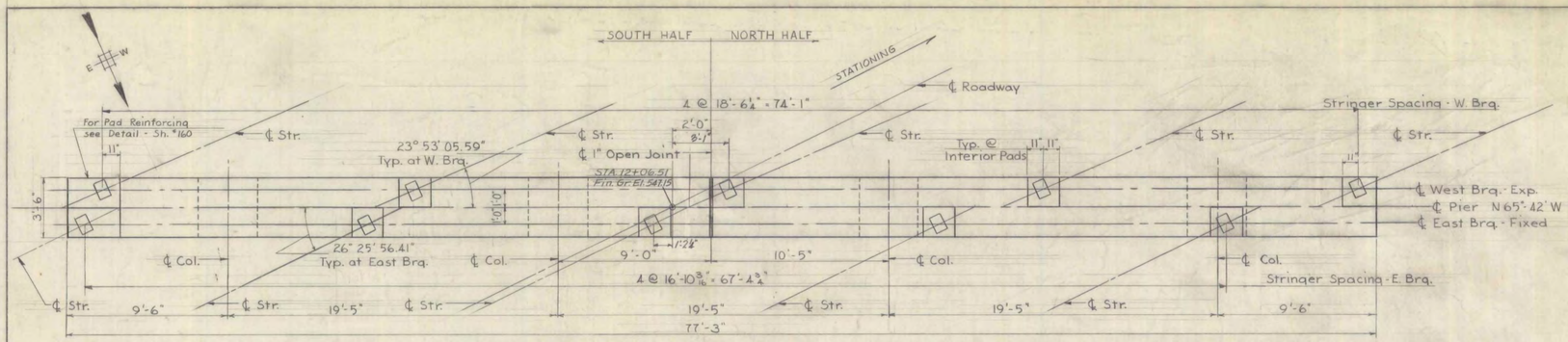

PLAN
Scale: 1/4" = 1'-0"

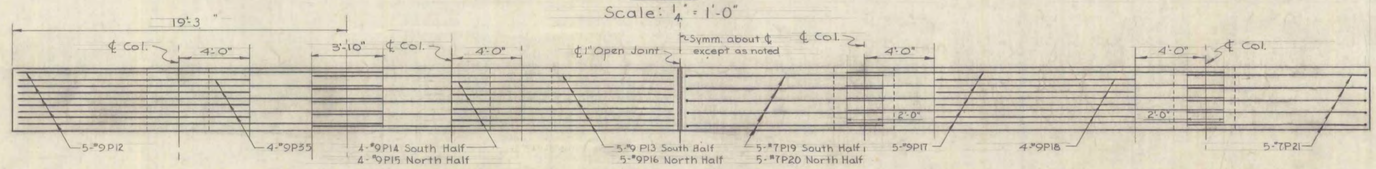

TOP

REINFORCING PLAN
Scale: 1/4" = 1'-0"

BOTTOM

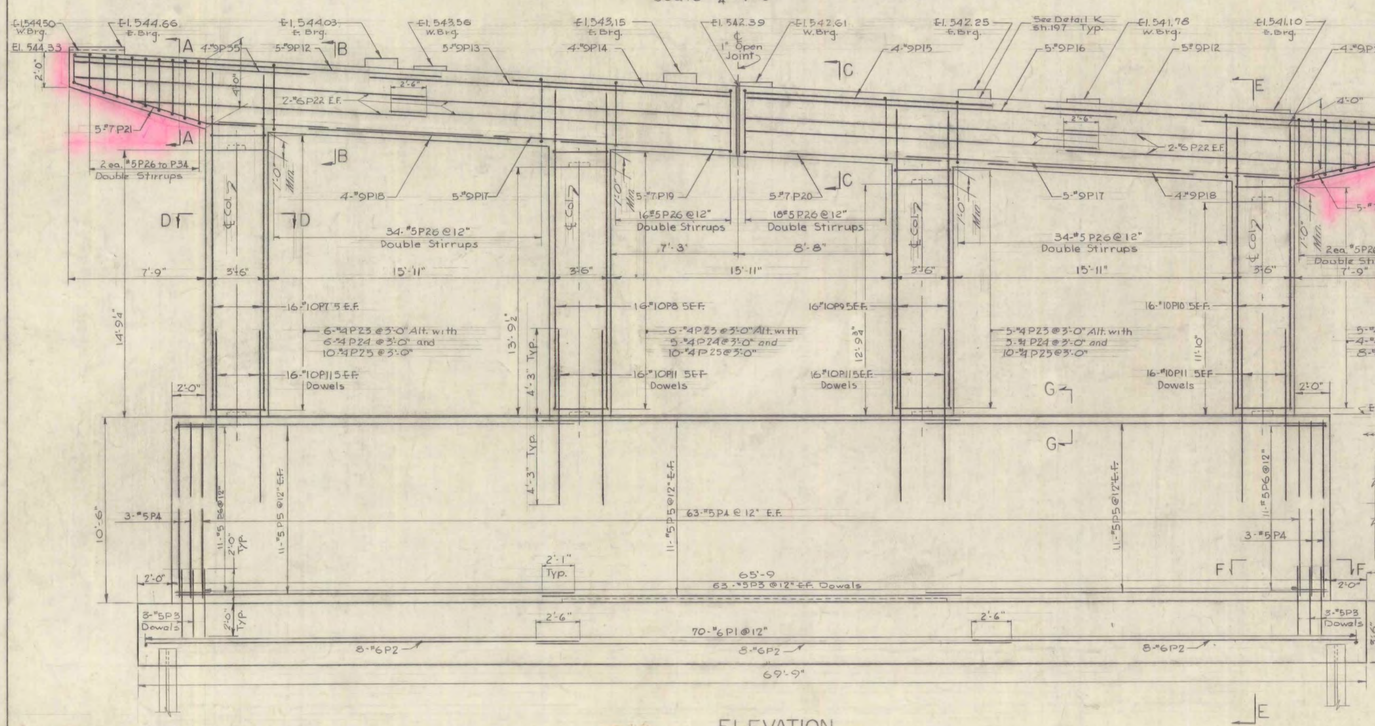

ELEVATION
Scale: 1/4" = 1'-0"

SECTION F-F
Scale: 3/8" = 1'-0"

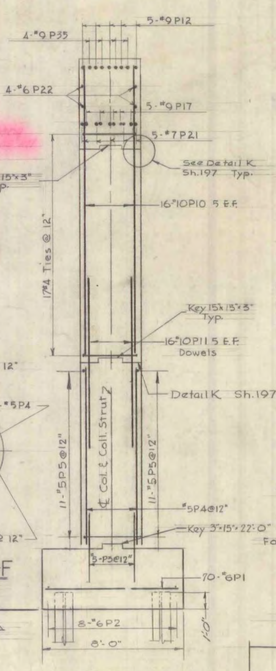

SECTION E-E
Scale: 1/4" = 1'-0"

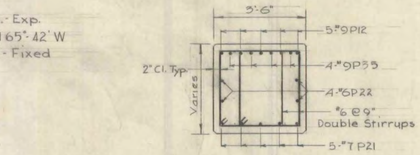

SECTION A-A
Scale: 3/8" = 1'-0"

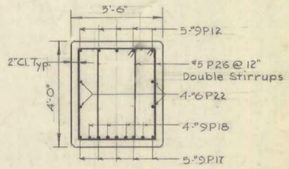

SECTION B-B
Scale: 3/8" = 1'-0"

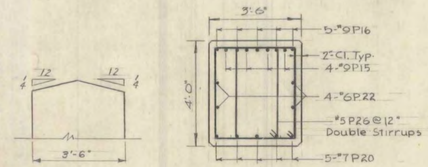

SECTION C-C
Scale: 3/8" = 1'-0"

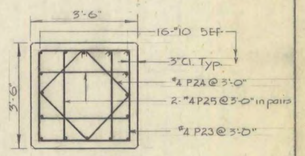

SECTION D-D
Scale: 3/8" = 1'-0"

SECTION G-G
Not To Scale

NOTE:
1. For General Notes see Sh. #145.
2. For Bearing Devices & Anchor Bolts see Detail "E" Sh. #197.
3. Reinforcing on top of cap shall be spaced to pass anchor bolts, maintaining minimum spacing requirements.
4. Maximum allowable pile load 35 tons
5. Piles to be driven to bear on rock.

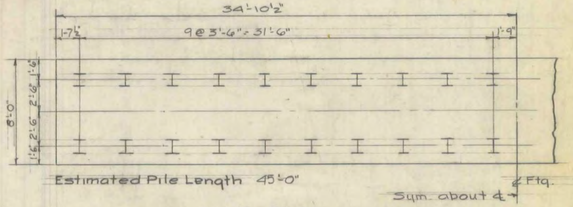

PILE PLAN
Scale 3/16" = 1'-0"

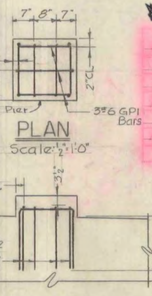

PLAN
Scale: 1/2" = 1'-0"

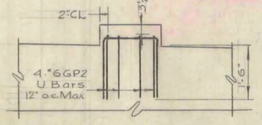

DETAIL - PAD REINFORCING
for pads exceeding 3" in height

Scale: 1/2" = 1'-0"

ESTIMATE OF QUANTITIES				
ITEM	DESCRIPTION	UNIT	NEAT	ROUND
107	STRUCTURE EXCAVATION	C.Y.	106	117
401B	CLASS B CONCRETE (MOD)	C.Y.	226	237
402	REINFORCING STEEL	LB.	18,640	—
407	ASPHALTIC ASBESTOS COATING	C.Y.	28	—
504	STEEL PILING 10 BP 42	L.F.	1800	—

STATE OF VERMONT
DEPARTMENT OF HIGHWAYS

INTERSTATE PROJECT in the towns of
BERLIN - MONTPELIER - MIDDLESEX

UNDERPASS STA. 388+04.42 STRUCTURE #5

PIER #6 DETAILS

BOSWELL ENGINEERING CO.
CONSULTING ENGINEERS
RIDGEFIELD PARK, N.J.

SURVEYED BY V.F.	CHECKED BY M.J.C.	SCALE	AS SHOWN
DRAWN BY D.R.F.	IN CHARGE K.A.	DATE	AUG. 1951

PROJECT NO. I 89-2(4) SHEET 158 OF 800

FED. ROAD SEC. NO.	STATE	FEDERAL PROJECT NO.	SHEET	TOTAL SHEETS
	VERMONT	I-89-2(1)	159	800

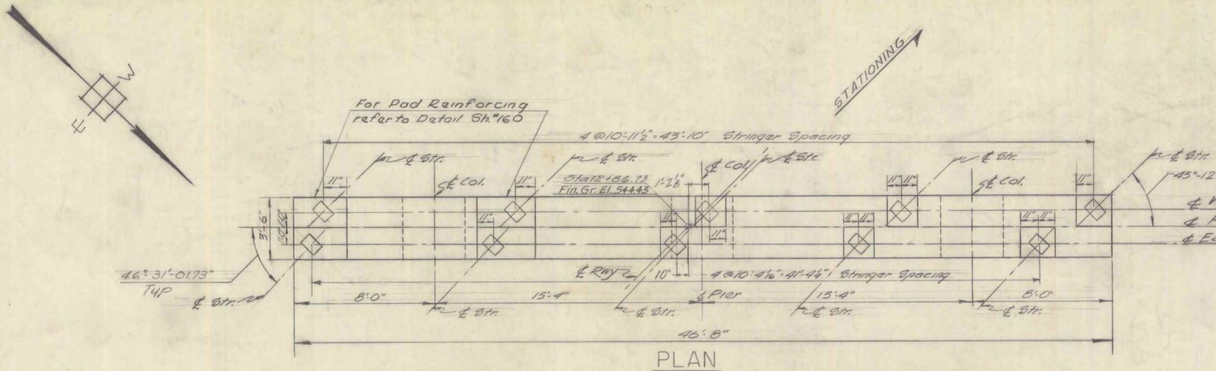

PLAN
Scale: ¼" = 1'-0"

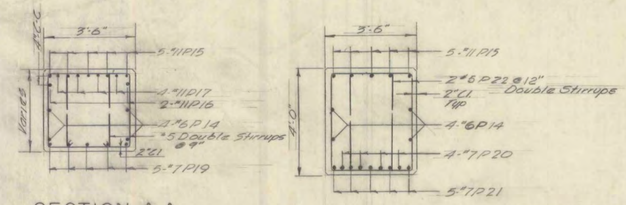

SECTION A-A
Scale ⅜" = 1'-0"

SECTION B-B
Scale ⅜" = 1'-0"

NOTES:
1. For General Notes see Sh. #149
2. For Bearing Devices & Anchor Bolts see Detail E Sh. #197
3. Reinforcing in top of pier cap shall be spaced to pass anchor bolts, maintaining minimum spacing requirements.
4. Maximum allowable pile load equals 35 tons.
5. Piles to be driven to bear on rock.

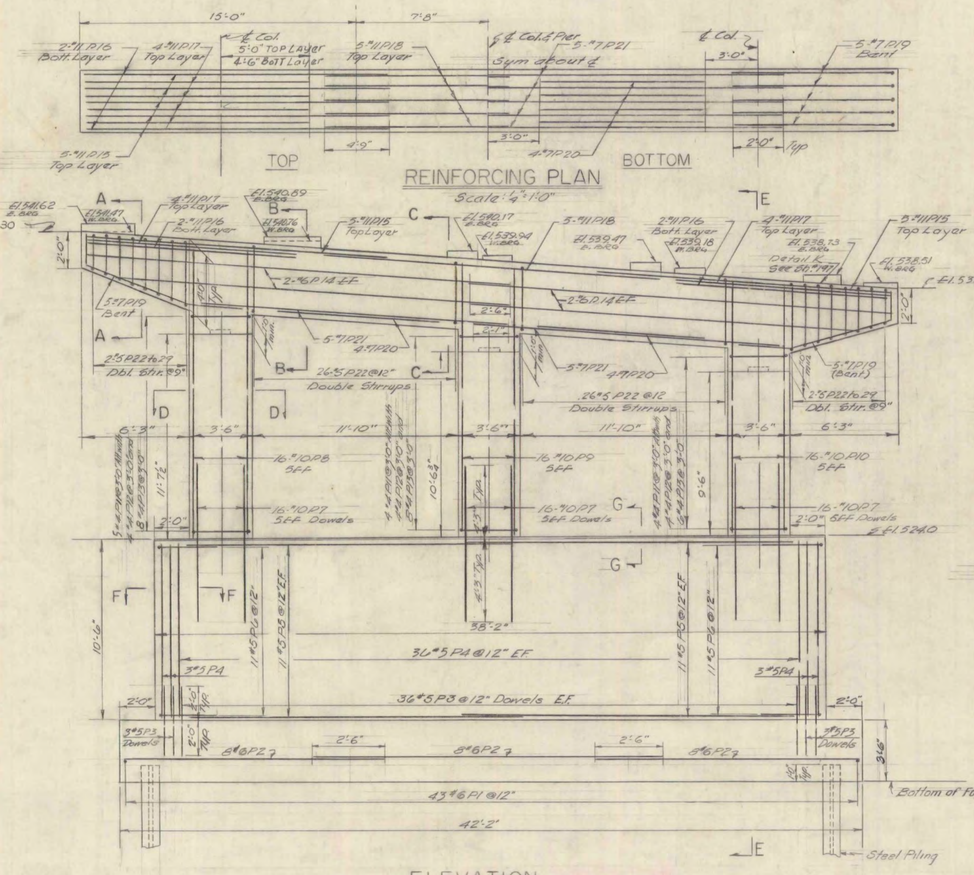

REINFORCING PLAN
Scale: ¼" = 1'-0"

ELEVATION
Scale ¼" = 1'-0"

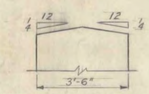

SECTION G-G
Not To Scale

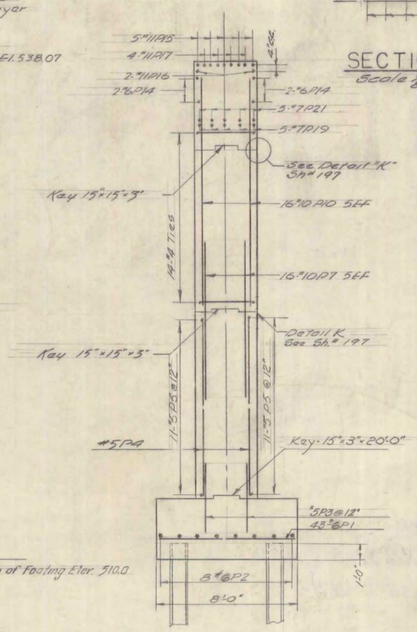

SECTION E-E
Scale ¼" = 1'-0"

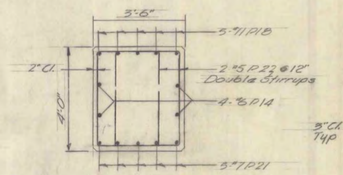

SECTION C-C
Scale ⅜" = 1'-0"

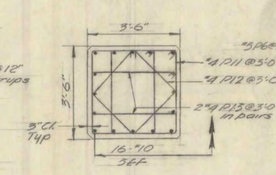

SECTION D-D
Scale ⅜" = 1'-0"
(Typ. all Columns)

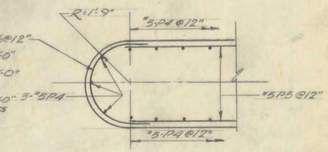

SECTION F-F
Scale ⅜" = 1'-0"

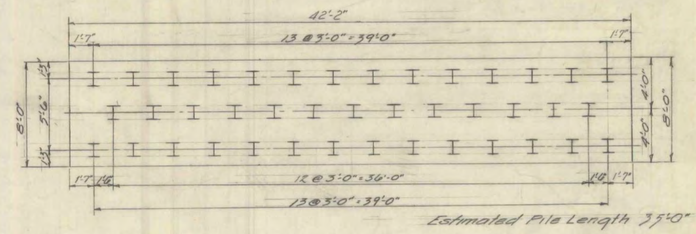

PILE PLAN
Scale 3/16" = 1'-0"

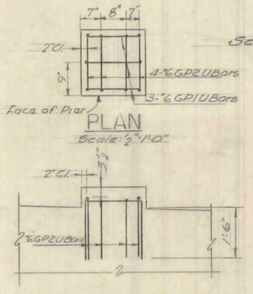

PLAN
Scale ½" = 1'-0"

DETAIL-PAD REINFORCING
for pads exceeding 3" in height
Scale: ½" = 1'-0"

ESTIMATE of QUANTITIES				
ITEM #	DESCRIPTION	UNIT	NEAT	ROUND
107	Structure Excavation	C.Y.	57	63
401B	Class B Concrete (Mod)	C.Y.	134	140
402	Reinforcing Steel	L.B.	14,496	—
407	Asphaltic Asbestos Coating	S.Y.	16	-
504	Steel Piling 10BP42	L.F.	1435	-

STATE OF VERMONT
DEPARTMENT OF HIGHWAYS

INTERSTATE PROJECT in the towns of
BERLIN - MONTPELIER - MIDDLESEX

UNDERPASS STA. 388+04.42 STR. #5

PIER #7 DETAILS

BOSWELL ENGINEERING CO.
CONSULTING ENGINEERS
RIDGEFIELD PARK, N.J.

SURVEYED BY		CHECKED BY	M.J.G.	SCALE	As Shown
DRAWN BY	D.G.F.	IN CHARGE	R.A.	DATE	August 1968

PROJECT NO. I 89-2-(4) SHEET 159 OF 800

FED. ROAD DIV. NO.	STATE	FEDERAL PROJECT NO.	SHEET	TOTAL SHEETS
	VERMONT	I 092-2(4)	160	800

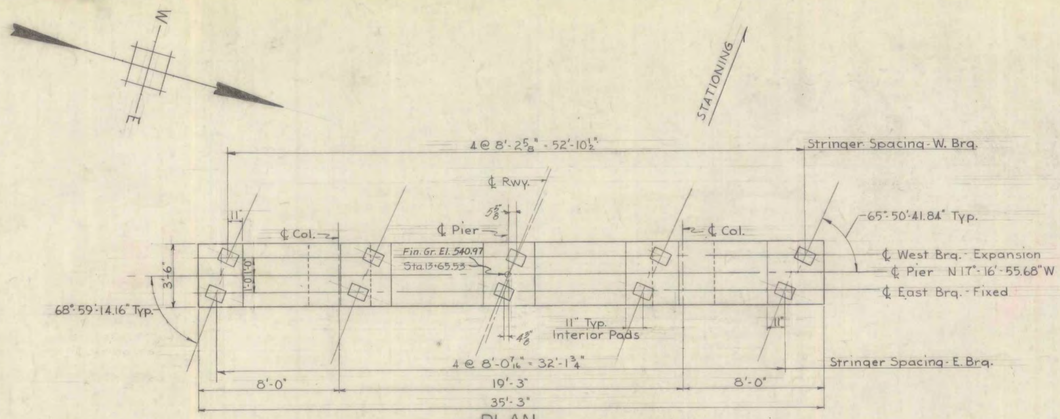

PLAN

Scale: 1/4" = 1'-0"

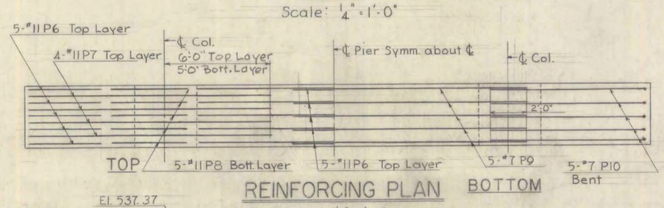

REINFORCING PLAN

Scale: 1/4" = 1'-0"

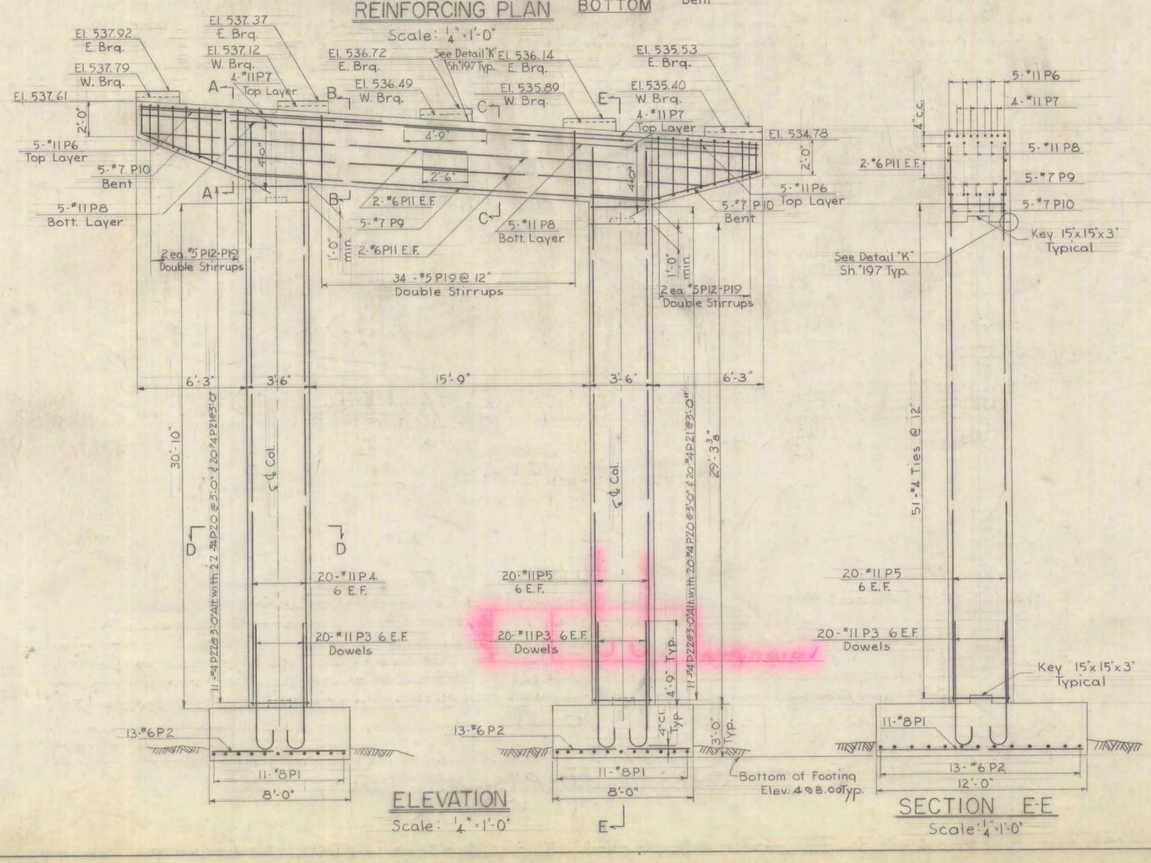

ELEVATION

Scale: 1/4" = 1'-0"

SECTION E-E

Scale: 1/4" = 1'-0"

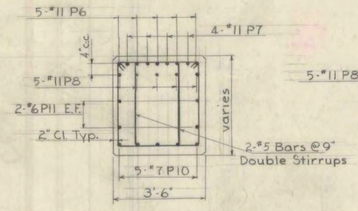

SECTION A-A

Scale: 3/8" = 1'-0"

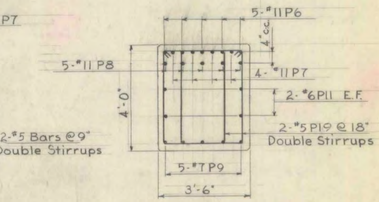

SECTION B-B

Scale: 3/8" = 1'-0"

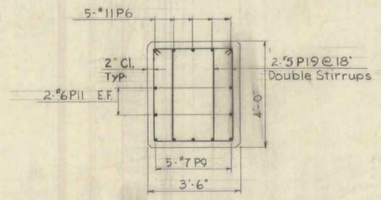

SECTION C-C

Scale: 3/8" = 1'-0"

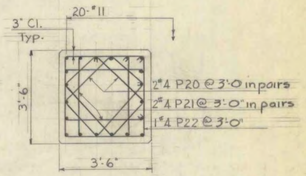

SECTION D-D

Scale: 3/8" = 1'-0"

(Typical All Columns)

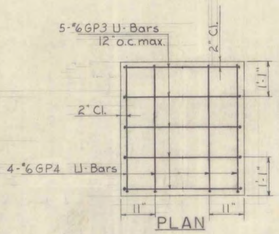

PLAN

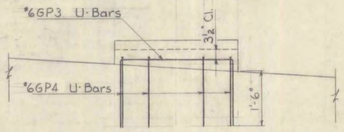

DETAIL OF PAD REINFORCING

FOR PADS EXCEEDING 3" IN HEIGHT

Scale: 1/2" = 1'-0"

NOTE:

1. For General Notes see Sh. #145.
2. For Bearing Devices & Anchor Bolts see Detail "E" Sh. #197.
3. Reinforcing in top of pier cap shall be spaced to pass anchor bolts, maintaining minimum spacing requirements.

ESTIMATE OF QUANTITIES

ITEM	DESCRIPTION	UNIT	NEAT	ROUND
107	STRUCTURE EXCAVATION	C.Y.	104	114
401B	CLASS B CONCRETE MOD.	C.Y.	67	71
402	REINFORCING STEEL	LB.	15,988	–
407	ASPHALTIC ASBESTOS COATING	S.Y.	10	–

STATE OF VERMONT
DEPARTMENT OF HIGHWAYS

INTERSTATE PROJECT in the towns of
BERLIN - MONTPELIER - MIDDLESEX

UNDERPASS STA. 388+04.42 STRUCTURE #5

PIER # 8 DETAILS

BOSWELL ENGINEERING CO.
CONSULTING ENGINEERS
RIDGEFIELD PARK, N.J.

SURVEYED BY V.T.	CHECKED BY M.B.C.	SCALE AS SHOWN
DRAWN BY A.B.	IN CHARGE	DATE Aug. 1957

PROJECT NO. I 89-2(4) | SHEET 160 OF 800

FED. ROAD DIV. NO.	STATE	FEDERAL PROJECT NO.	SHEET	TOTAL SHEETS
	VERMONT	I 089-2(11)	161	800

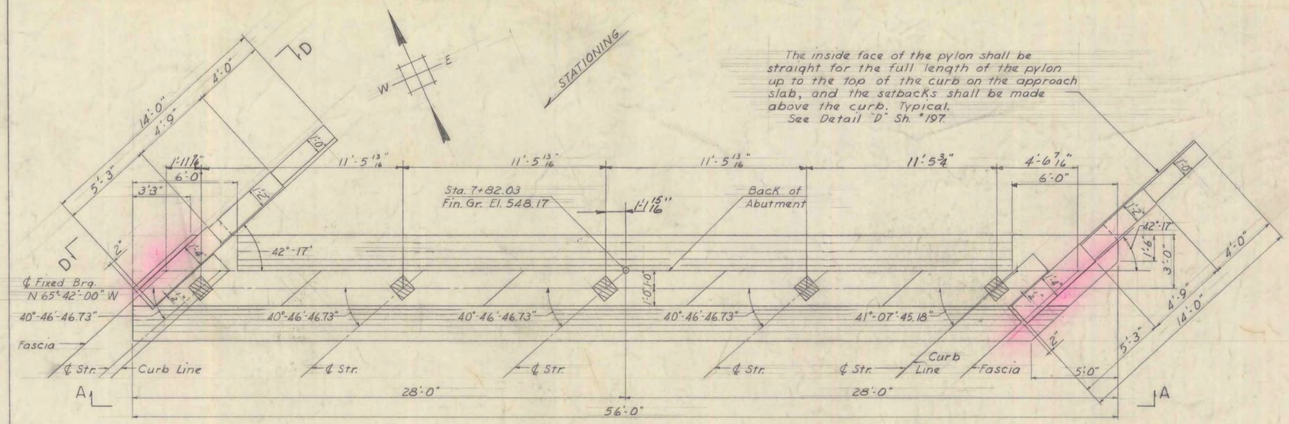

PLAN

Scale: 1/4" = 1'-0"

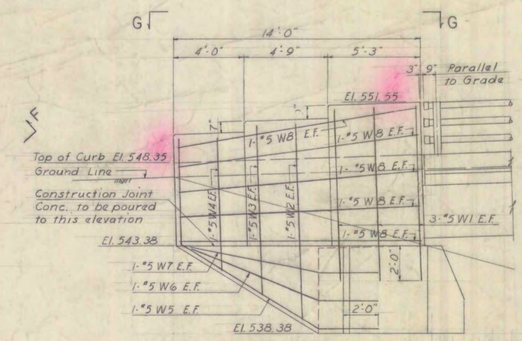

ELEVATION D-D

NORTH PYLON

Scale: 1/4" = 1'-0"

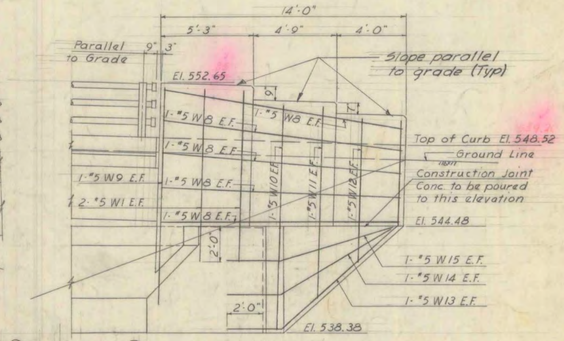

ELEVATION F-F

SOUTH PYLON

Scale: 1/4" = 1'-0"

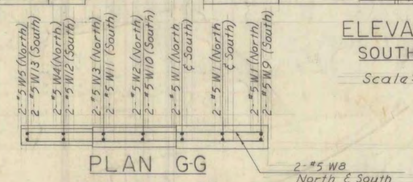

PLAN G-G

NORTH PYLON

SOUTH PYLON - OPP. HAND

Scale: 1/4" = 1'-0"

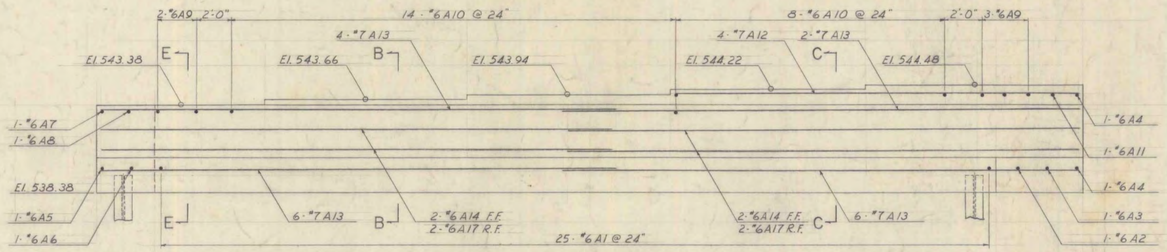

ELEVATION A-A

Scale: 1/4" = 1'-0"

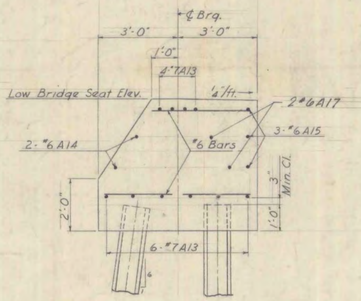

SECTION E-E

Scale: 3/8" = 1'-0"

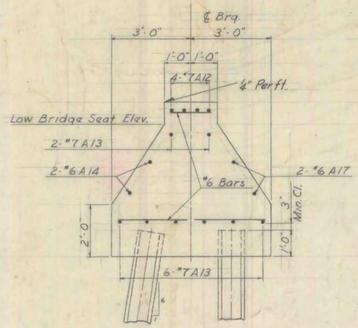

SECTION C-C

Scale: 3/8" = 1'-0"

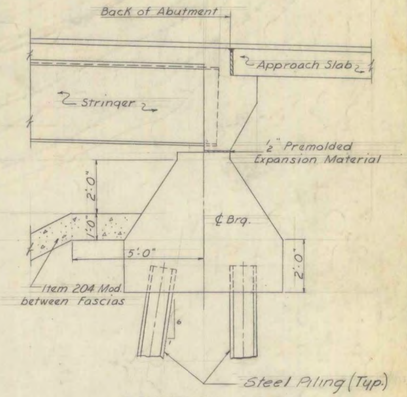

SECTION B-B

Scale: 3/8" = 1'-0"

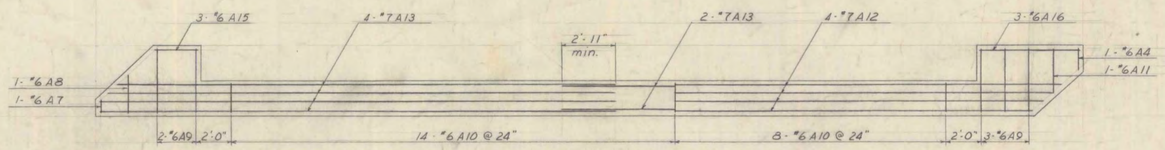

TOP REINFORCING PLAN

Scale: 1/4" = 1'-0"

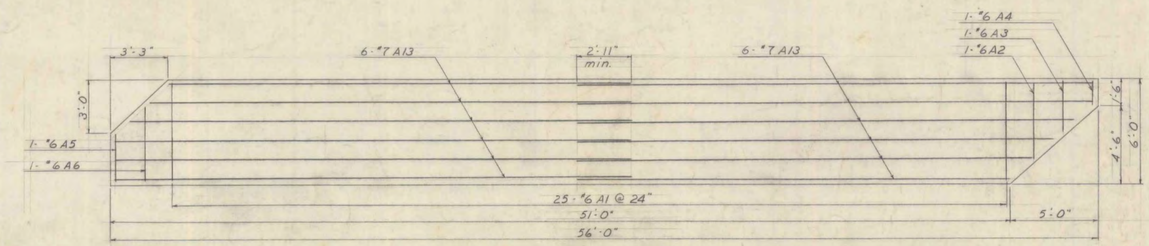

BOTTOM REINFORCING PLAN

Scale: 1/4" = 1'-0"

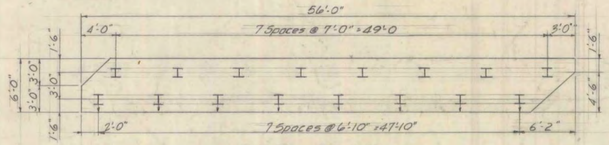

PILE PLAN

Scale: 1/8" = 1'-0"

NOTE:

1. For General Notes see Sh. #145.
2. For Bearing Devices & Anchor Bolts see Detail "E" Sh. #197.
3. For Pile Shoes see Detail "F" Sh. #197.
4. For Bridge Marker see Detail "W" Sh. #198.
5. Reinforcing in top of abutment shall be spaced to clear anchor bolts, maintaining minimum spacing requirements.
6. End posts (pylons) to be set normal to grade.
7. Drive piles to ledge or suitable bearing capacity satisfactory to the Engineer.

ESTIMATE OF QUANTITIES

ITEM	DESCRIPTION	UNIT	NEAT	ROUND	Firm Est.
107	STRUCTURE EXCAVATION	C.Y.	17	19	12
204	SUB-BASE OF CRUSHED ROCK (MODIFIED)	C.Y.	99	104	96
401B	CLASS B CONCRETE (MODIFIED)	C.Y.	63	66	54.2
402	REINFORCING STEEL	LB.	2686	–	2,194.2
407	ASPHALTIC ASBESTOS COATING	S.Y.	14	–	5
504	STEEL PILING (10BP42)	LF	560	–	613.2

KS

STATE OF VERMONT
DEPARTMENT OF HIGHWAYS

INTERSTATE PROJECT in the towns of
BERLIN - MONTPELIER - MIDDLESEX

UNDERPASS STA. 388+04.42 STRUCTURE #5

EAST ABUTMENT DETAILS

BOSWELL ENGINEERING CO.
CONSULTING ENGINEERS
RIDGEFIELD PARK, N.J.

SURVEYED BY	V.T.	CHECKED BY	M.J.C.	SCALE	AS SHOWN
DRAWN BY	A.B.	IN CHARGE	K.O.	DATE	AUG., 1957

PROJECT NO. I 89-2(4) SHEET 161 OF 800

FED. ROAD DIV. No.	STATE	FEDERAL PROJECT No.	SHEET	TOTAL SHEETS
	VERMONT	I 002-2(4)	162	800

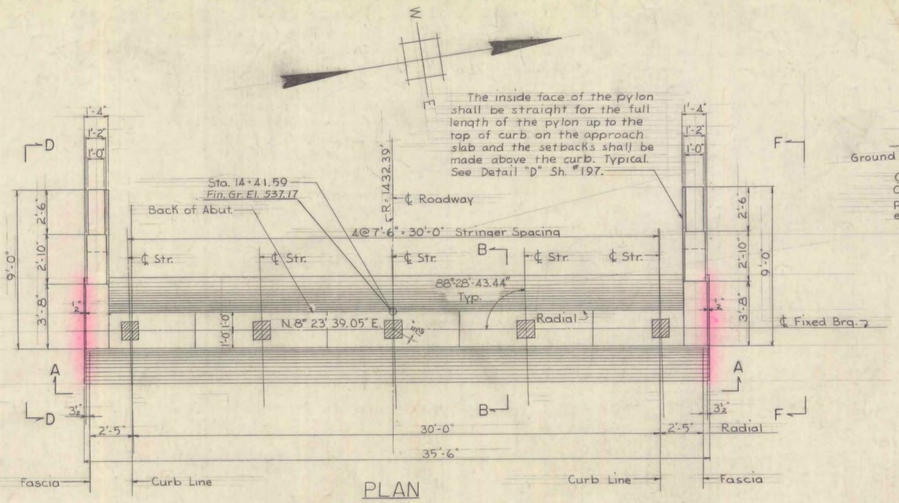

PLAN
Scale: 1/4" = 1'-0"

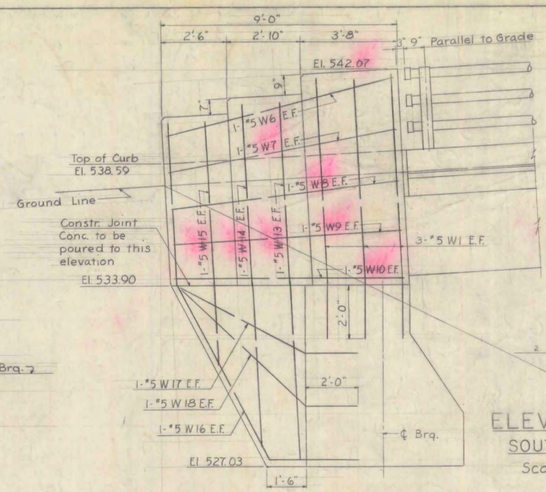

ELEVATION D-D
SOUTH PYLON
Scale: 3/8" = 1'-0"

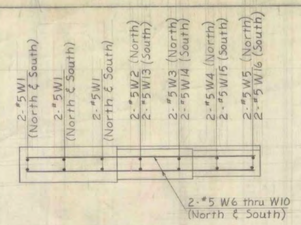

PLAN G-G
NORTH PYLON
SOUTH PYLON - OPP. HAND
Scale: 3/8" = 1'-0"

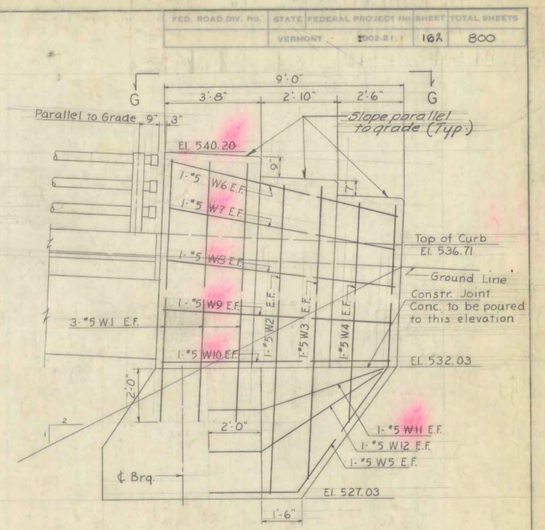

ELEVATION F-F
NORTH PYLON
Scale: 3/8" = 1'-0"

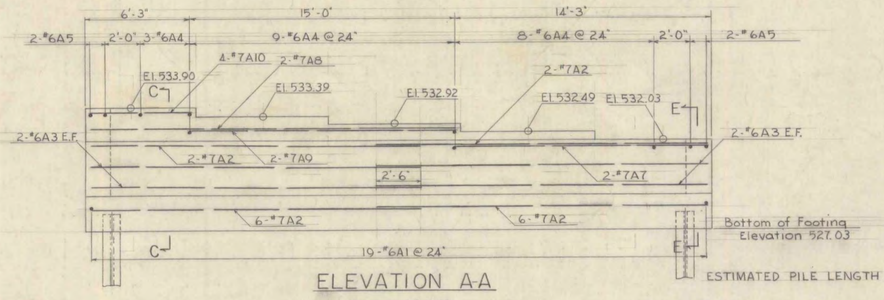

ELEVATION A-A
Scale: 1/4" = 1'-0"

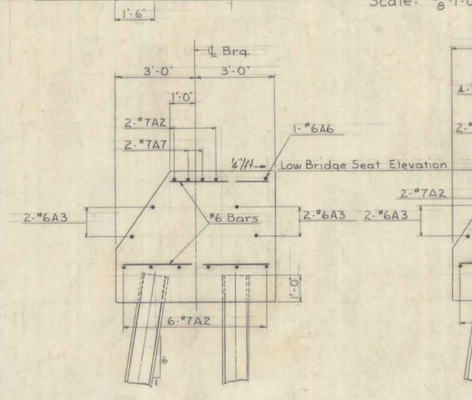

SECTION E-E
Scale: 3/8" = 1'-0"

SECTION C-C
Scale: 3/8" = 1'-0"

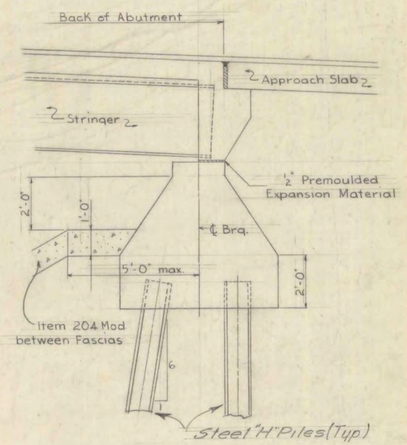

SECTION B-B
Scale: 3/8" = 1'-0"

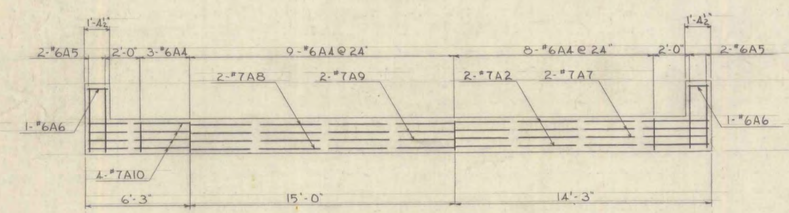

TOP REINFORCING PLAN
Scale: 1/4" = 1'-0"

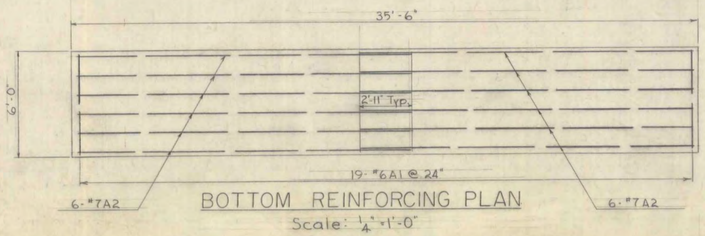

BOTTOM REINFORCING PLAN
Scale: 1/4" = 1'-0"

ESTIMATE OF QUANTITIES

ITEM	DESCRIPTION	UNIT	NEAT	ROUND
107	STRUCTURE EXCAVATION	C.Y.	11	12
204	SUB-BASE OF CRUSHED ROCK (MOD)	C.Y.	95	100
401B	CLASS B CONCRETE (MOD)	C.Y.	43	45
402	REINFORCING STEEL	L.B.	1925	—
407	ASPHALTIC ASBESTOS COATING	S.Y.	8	—
504	STEEL PILING (10BP42)	L.F.	660	—

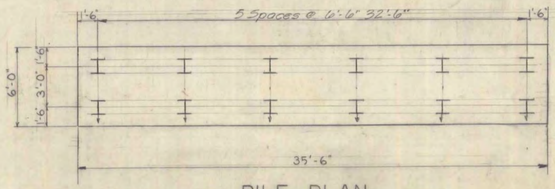

PILE PLAN
Scale: 3/16" = 1'-0"

NOTE:
1. For General Notes see Sh. #145
2. For Bearing Devices & Anchor Bolts see Detail "E" Sh. #197.
3. For Pile Shoes see Detail "F" Sh. #197.
4. For Bridge Marker see Detail "W" Sh. #198.
5. Reinforcing in top of abutment shall be spaced to pass anchor bolts, maintaining minimum spacing requirements.
6. End post (pylons) to be set normal to grade.
7. Drive piles to ledge or suitable bearing capacity satisfactory to the Engineer.

STATE OF VERMONT
DEPARTMENT OF HIGHWAYS

INTERSTATE PROJECT in the towns of
BERLIN - MONTPELIER - MIDDLESEX
UNDERPASS STA. 388+04.42 STRUCTURE #5
WEST ABUTMENT DETAILS

BOSWELL ENGINEERING CO.
CONSULTING ENGINEERS
RIDGEFIELD PARK, N.J.

SURVEYED BY V.T.	CHECKED BY A.J.I.	SCALE AS SHOWN	
DRAWN BY A.B.	IN CHARGE R.A.	DATE AUG., 1957	

PROJECT NO. I 89-2(4) SHEET 162 OF 800

FED. ROAD DIV. NO.	STATE	FEDERAL PROJECT No.	SHEET	TOTAL SHEETS
	VERMONT	I 002-2(1)	166	800

ADDITIONAL BORING INFORMATION PIER No. 2			
BORING Nº	GROUND ELEV.	BORING DEPTH.	LEDGE ELEV.
2	535.4	1.67	533.7
3	535.8	3.83	532.0
4	536.8	3.58	533.2
25	535.3	10.42	524.9
28	535.0	15.17	519.8
7	534.6	17.50	517.1
8	535.2	11.50	523.7
26	534.7	23.75	510.9
11	534.6	47.50	487.1
12	534.4	44.50	489.9
13	534.8	42.33	492.5
27	534.7	48.33	486.4
16	534.6	49.00	485.6
17	534.4	48.00	486.4
18	534.3	46.00	488.3
21	528.3	46.00	482.3
22	529.3	44.50	484.8
23	530.3	45.50	484.8

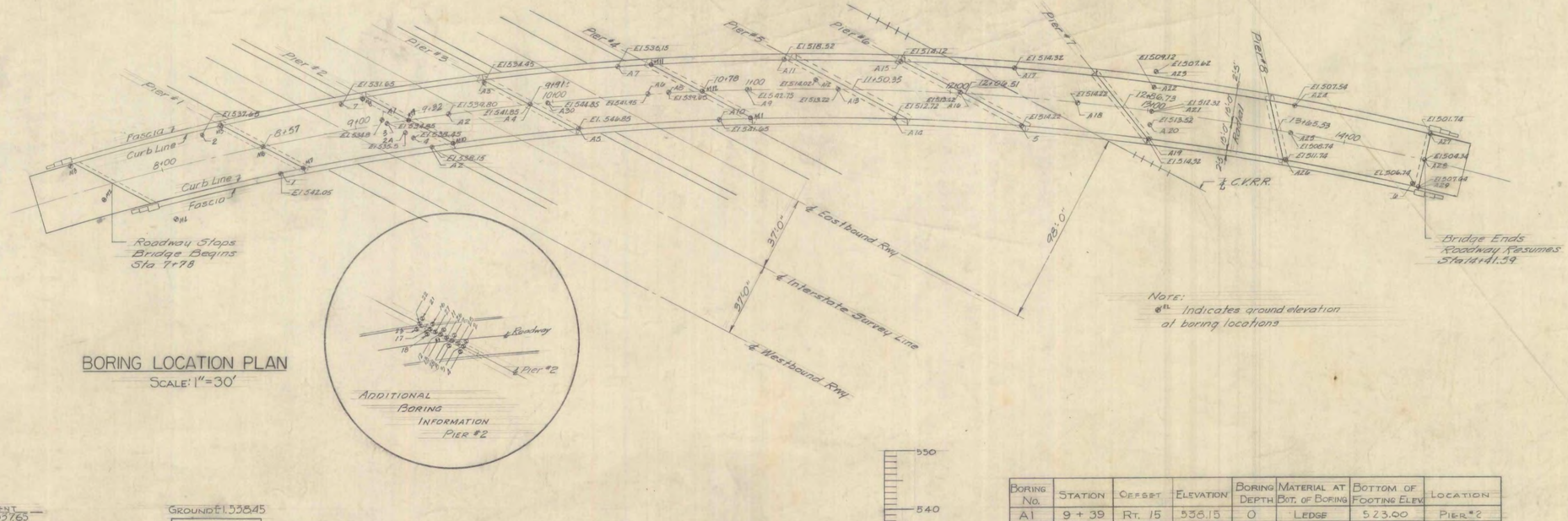

BORING LOCATION PLAN

SCALE: 1"=30'

Note: ⊕ Indicates ground elevation at boring locations

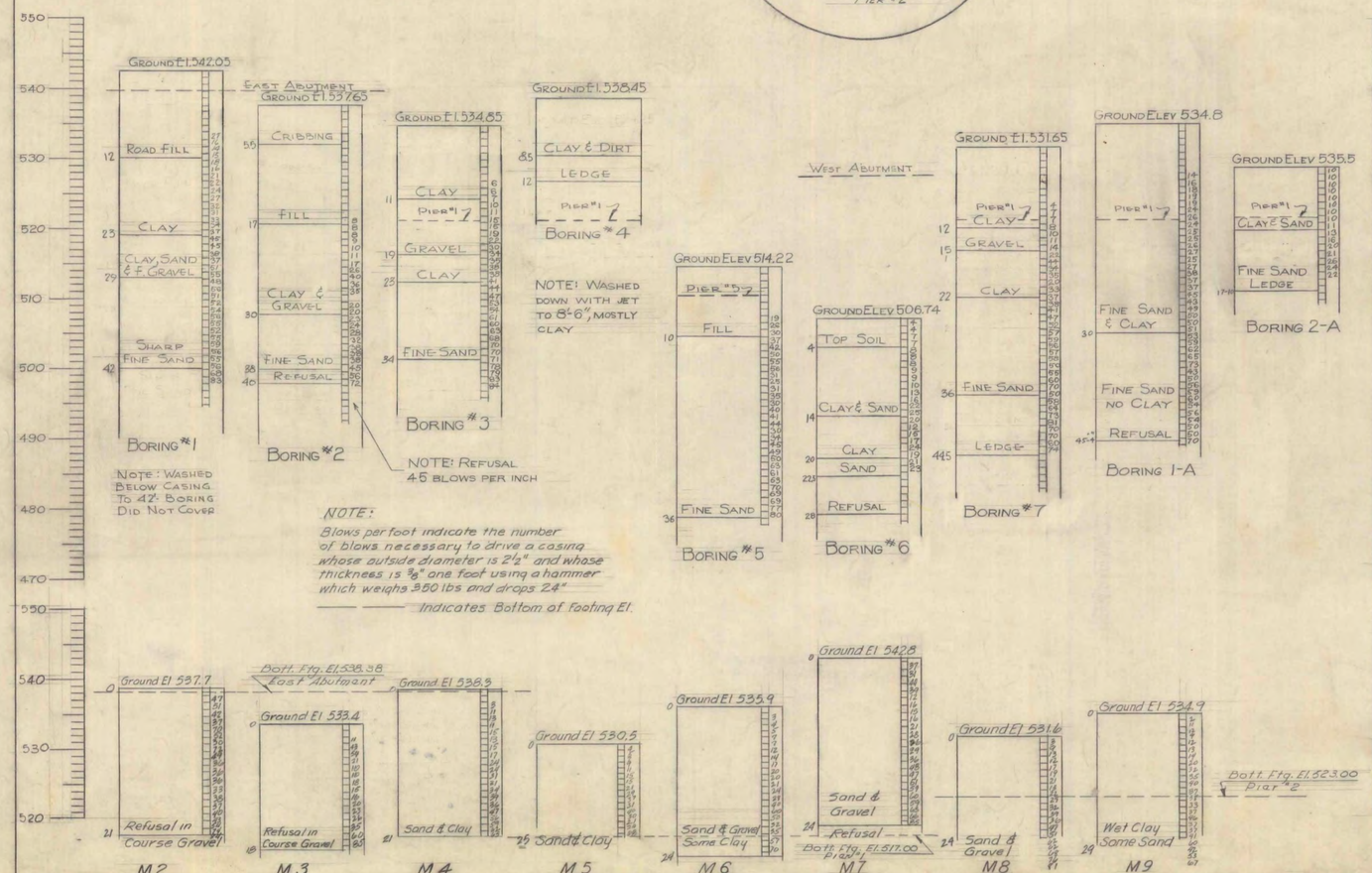

BORING No.	STATION	OFFSET	ELEVATION	BORING DEPTH	MATERIAL AT BOT. OF BORING	BOTTOM OF FOOTING ELEV.	LOCATION
A1	9 + 39	Rt. 15	538.15	0	Ledge	523.00	Pier #2
A2	9 + 50	℄	539.80	0	Ledge	523.00	Pier #2
A3	9 + 70	Lt. 14	534.45	0	Ledge	520.00	Pier #3
A4	9 + 92	℄	541.85	0	Ledge	520.00	Pier #3
A5	10 + 14	Rt. 15	546.85	0	Ledge	520.00	Pier #3
A6	10 + 50	℄	541.45	0	Ledge	520.00	Pier #4
A7	10 + 36	Lt. 15	536.15	0	Ledge	520.00	Pier #4
A8	10 + 61	℄	539.65	0	Ledge	520.00	Pier #4
A9	11 + 00	℄	542.75	0	Ledge	520.00	Piers #4
A10	10 + 86	Rt. 15	541.65	0	Ledge	520.00	Pier #4
A11	11 + 19	Lt. 15	518.52	0	Ledge	507.00	Pier #5
A12	11 + 35	Lt. 5	514.02	13	Rock	507.00	Pier #5
A13	11 + 46	℄	513.22	24	Rock	507.00	Pier #5
A14	11 + 75	Rt. 15	512.72	36	Rock	507.00	Pier #5
A15	11 + 77	Lt. 15	514.12	32	Rock	510.00	Pier #6
A16	12 + 07	℄	513.62	46	Rock	510.00	Pier #6
A17	12 + 34	Lt. 15	514.32	55	Sand	510.00	Pier #7
A18	12 + 67	℄	514.22	50	Sand	510.00	Pier #7
A19	13 + 04	Rt. 15	514.32	55	Sand	510.00	Pier #7
A20	13 + 04	Rt. 7	513.52	32	Rock	510.00	Pier #7
A21	13 + 04	℄	512.32	12	Rock	510.00	Pier #7
A22	13 + 04	Lt. 12	509.12	22	Rock	510.00	Pier #7
A23	13 + 04	Lt. 20	507.62	22.5	Rock	510.00	Pier #7
A24	13 + 75	Lt. 15	507.54	8.5	Rock	498.00	Pier #8
A25	13 + 75	℄	508.74	9	Rock	498.00	Pier #8
A26	13 + 75	Rt. 15	511.74	7	Rock	498.00	Pier #8
A27	14 + 43	Lt. 15	501.74	22	Rock	527.15	W. Abut
A28	14 + 43	℄	504.34	24	Rock	527.15	W. Abut
A29	14 + 43	Rt. 15	507.64	22.5	Rock	527.15	W. Abut
A30	10 + 00	℄	544.85	0	Ledge	522.00	Pier #3
M1	10 + 99	Rt. 15	521.5	0	Ledge	520.00	Pier #4
M10	9 + 47	Rt. 15	536.4	0	Ledge	523.00	Pier #2
M11	10 + 51	Lt. 15	547.4	0	Ledge	520.00	Pier #4
M12	10 + 75	℄	541.0	0	Ledge	520.00	Pier #4

NOTE

For General Notes See Sh. #145

STATE OF VERMONT
DEPARTMENT OF HIGHWAYS

INTERSTATE PROJECT in the towns of
BERLIN - MONTPELIER - MIDDLESEX

UNDERPASS STA 388+04.42 STRUCTURE #5

BORING LOGS

BOSWELL ENGINEERING CO.
CONSULTING ENGINEERS
RIDGEFIELD PARK, N. J.

SURVEYED BY	VT	CHECKED BY	MAC	SCALE	AS SHOWN
DRAWN BY	PCL	IN CHARGE	KA	DATE	AUG. 1957

PROJECT NO. I 82-2(4) SHEET 166 OF 800

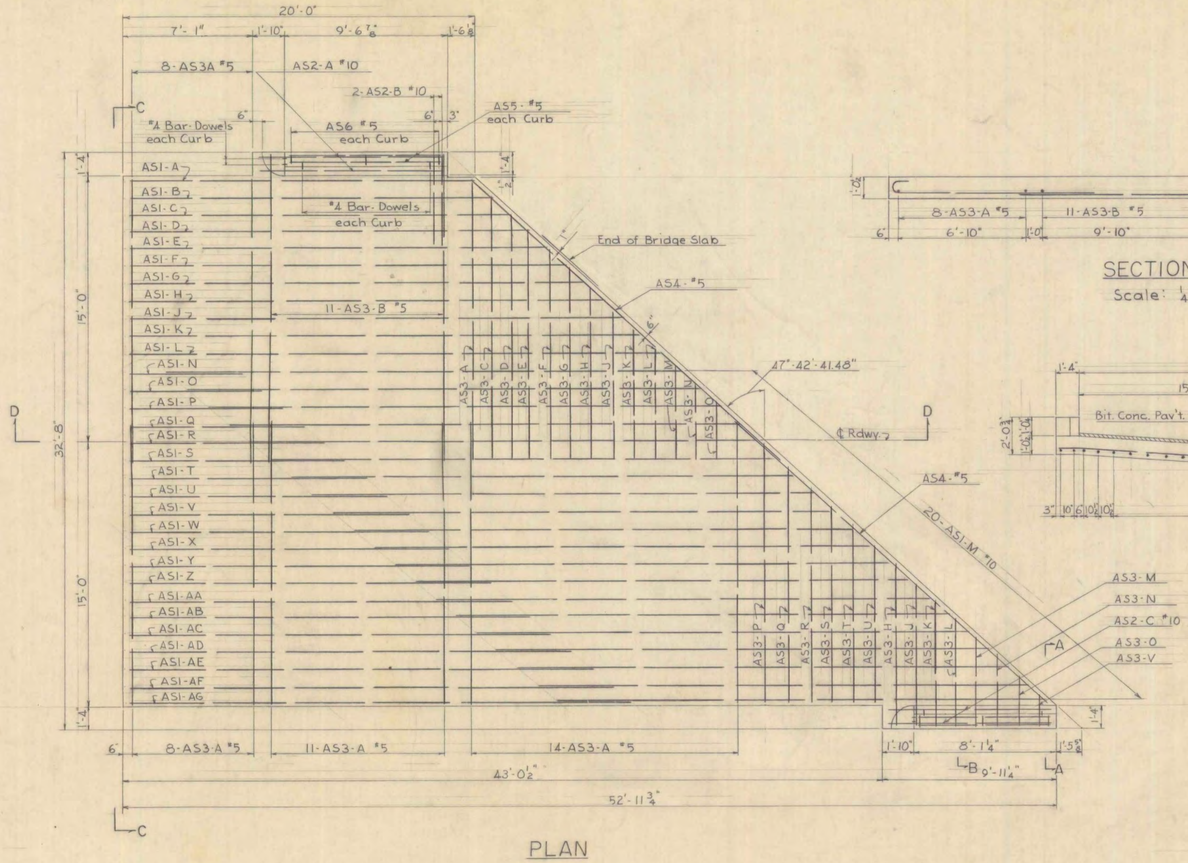

PLAN
Scale: 1/4" = 1'-0"

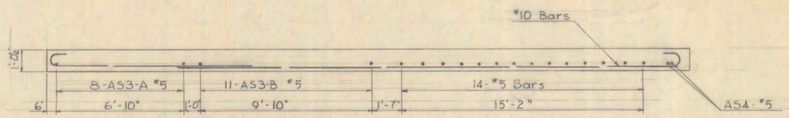

SECTION D-D
Scale: 1/4" = 1'-0"

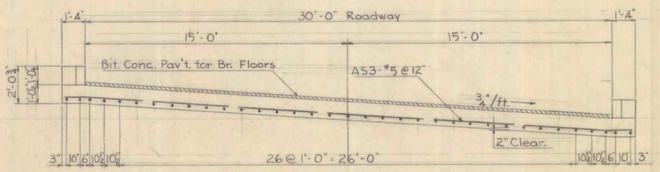

VIEW C-C
Scale: 1/4" = 1'-0"

DETAILS OF BENT BARS

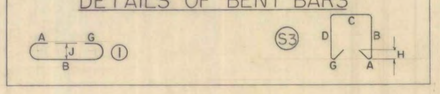

REINFORCING STEEL SCHEDULE												
MARK	NO. REQ'D	LENGTH	TYPE	SIZE	A	B	C	D	G	H	J
AS1-A	1	21'-6"	1	#10	0'-11"	10'-8"			0'-11"		0'-8"
AS1-B	1	22'-6"				20'-8"					
AS1-C	1	23'-6"				21'-8"					
AS1-D	1	24'-7"				22'-9"					
AS1-E	1	25'-8"				23'-10"					
AS1-F	1	26'-10"				25'-0"					
AS1-G	1	27'-11"				26'-1"					
AS1-H	1	29'-0"				27'-2"					
AS1-J	1	30'-1"				28'-3"					
AS1-K	1	31'-2"				29'-4"					
AS1-L	1	32'-4"				30'-6"			0'-11"		
AS1-M	20	31'-5"				30'-6"			O		
AS1-N	1	6'-3"				5'-4"					
AS1-O	1	7'-4"				6'-5"					
AS1-P	1	8'-5"				7'-6"					
AS1-Q	1	9'-7"				8'-8"					
AS1-R	1	10'-8"				9'-9"					
AS1-S	1	11'-9"				10'-10"					
AS1-T	1	12'-10"				11'-11"					
AS1-U	1	13'-11"				13'-0"					
AS1-V	1	15'-1"				14'-2"					
AS1-W	1	16'-2"				15'-3"					
AS1-X	1	17'-3"				16'-4"					
AS1-Y	1	18'-4"				17'-5"					
AS1-Z	1	19'-5"				18'-6"					
AS1-AA	1	20'-6"				19'-7"					
AS1-AB	1	21'-8"				20'-9"					
AS1-AC	1	22'-9"				21'-10"					
AS1-AD	1	23'-10"				22'-11"					
AS1-AE	1	24'-11"				24'-0"					
AS1-AF	1	26'-0"				25'-1"					
AS1-AG	1	27'-2"				26'-3"			O		
AS2-A	2	12'-10"	1		0'-11"	11'-0"			0'-11"		0'-8"
AS2-B	2	5'-0"	STR.								
AS2-C	2	11'-5"	1	#10	0'-11"	9'-7"			0'-11"		0'-8"
AS3-A	42	15'-0"	STR.	#5							
AS3-B	11	17'-1"									
AS3-C	1	14'-11"									
AS3-D	1	13'-10"									
AS3-E	1	12'-9"									
AS3-F	1	11'-8"									
AS3-G	1	10'-7"									
AS3-H	2	9'-6"									
AS3-J	2	8'-5"									
AS3-K	2	7'-4"									
AS3-L	2	6'-3"									
AS3-M	2	5'-3"									
AS3-N	2	4'-2"									
AS3-O	2	3'-1"									
AS3-P	1	14'-8"									
AS3-Q	1	13'-7"									
AS3-R	1	12'-6"									
AS3-S	1	11'-5"									
AS3-T	1	10'-4"									
AS3-U	1	9'-3"									
AS3-V	1	2'-0"									
AS4	2	23'-0"	1								
AS5	4	8'-0"	STR.								
AS6	6	4'-4"	S3	#5	0'-5"	1'-6"	0'-6"	1'-6"	0'-5"	0'-2	0'-2 3/4"

ESTIMATED QUANTITIES FOR ONE SLAB	
ITEM	QUANTITY
BIT. CONCRETE PAV'T. FOR BRIDGE FLOORS	16 TONS
CONCRETE-CLASS B	46 CY
REINFORCING STEEL	7,240 LB.
GRANITE BRIDGE CURB - TYPE 1	20 L.F.

AB

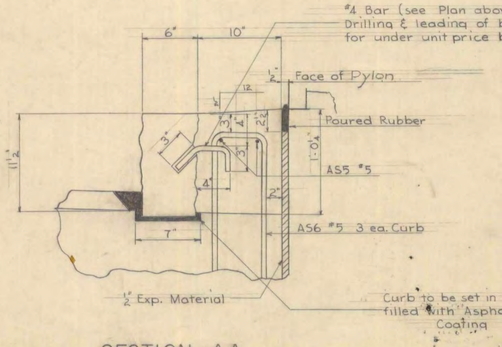

SECTION A-A
Scale: 1 1/2" = 1'-0"

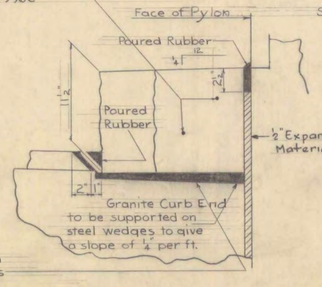

SECTION B-B
Scale: 1 1/2" = 1'-0"

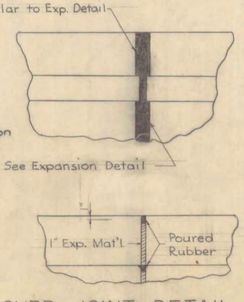

CURB JOINT DETAIL
Scale: 3/4" = 1'-0"

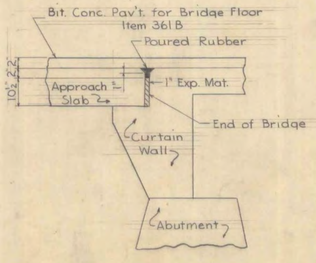

EXPANSION DETAIL
Scale: 1 1/2" = 1'-0"

STATE OF VERMONT
DEPARTMENT OF HIGHWAYS

INTERSTATE PROJECT in the towns of
BERLIN - MONTPELIER - MIDDLESEX

EAST APPROACH SLAB DETAILS
STRUCTURE #5

BOSWELL ENGINEERING CO.
CONSULTING ENGINEERS
RIDGEFIELD PARK, N.J.

SURVEYED BY / DRAWN BY: V.T. / A.B. | CHECKED BY / IN CHARGE: J.M. / R.A. | SCALE: AS SHOWN | DATE: AUG. 1957

PROJECT NO. I 89-2(4) | SHEET 195 OF 800