VTrans Vermont Agency of Transportation

REQUEST FOR PROJECT REVIEW

RFPR version 4.0.a.

PROJECT INFORMATION

Proj. Name and Number: St. Albans HPP 8000(17)

EA No.: 8000017 PPMS: 05D316

Project Manager: Scott Robertson

DOCUMENTS FOR REVIEW AND FILES LOCATION

PLANS	PRELIMINARY	FILE LOCATION :	Z:\Highways\MUN\LCL\LTF Projects\St. Albans HPP 8000(17) - 05D316\Preliminary
ESTIMATES	PRELIMINARY	FILE LOCATION :	Z:\Highways\MUN\LCL\LTF Projects\St. Albans HPP 8000(17) - 05D316\Preliminary
SPECIAL PROVISION	FINAL	FILE LOCATION :	Z:\Highways\MUN\LCL\LTF Projects\St. Albans HPP 8000(17) - 05D316\Preliminary

TIME LINES

SUBMITTED: 05-20-2016

DEADLINE: 06-22-2016

COMPLETED: 06-27-2016

Brief Project Description: Federal St. multi-modal connector (1.74 miles). See Review Focus Notes at the bottom of this page.

Program: Municipal Assistance

Project Location: This project creates a fourth leg at the US7 / St. Albans State Highway intersection. It continues 1.74 miles along Lemnah, Allen, Federal, Catherine, and Market streets to the intersection of US 7 and Lower Newton Rd.

Route: *Town Highway*

INVITEES FOR REVIEW

- [ ] MOB District 1
- [ ] MOB District 2
- [ ] MOB District 3
- [ ] MOB District 4
- [ ] MOB District 5
- [ ] MOB District 7
- [x] MOB District 8 — Didn't participate in On-line review.
- [ ] MOB District 9
- [x] MOB TSMO Traffic Operations — REVIEWED By Nancy L. Avery (nancy.avery@vermont.gov) at 2:26 pm, Jun 08, 2016; REVIEWED By Tyler Guazzoni (tyler.guazzoni@state.vt.us) at 9:27 am, Jun 21, 2016
- [x] MOB Technical Services — REVIEWED By Tyler Hanson (tyler.hanson@vermont.gov) at 9:11 am, Jun 20, 2016
- [x] MAB Bicycle and Pedestrian Program Unit — Didn't participate in On-line review.
- [ ] PDB Right-of-Way
- [x] PDB Structural Section — REVIEWED By James LaCroix (james.lacroix@vermont.gov) at 11:57 am, Jun 03, 2016
- [ ] PDB Survey Section
- [x] PDB Utility Section — REVIEWED By Shaun Corbett (shaun.corbett@vermont.gov) at 11:14 am, May 24, 2016
- [x] PDB Highway Safety & Design — REVIEWED brief review of signals only By Ian Degutis (ian.degutis@vermont.gov) at 11:45 am, Jun 14, 2016
- [ ] PDB Environmental Section
- [x] PDB Hydraulics Section — REVIEWED By L Russell (leslie.russell@vermont.gov) at 1:39 pm, Jun 01, 2016
- [ ] Integral Abutment
- [ ] CMB Construction Section
- [ ] CMB Materials Testing and Certification Section
- [ ] CMB Geotechnical Engineering Section
- [ ] Policy and Planning Bureau
- [ ] FHWA
- [x] Rail Bureau — REVIEWED By Josh Martineau (Joshua.Martineau@vermont.gov) at 10:25 am, Jun 16, 2016
- [ ] Civil Rights
- Others: Jon Lemieux, Dan Peterson, Scott Gurley, Derek Kenison
  - REVIEWED By Derek Kenison (derek.kenison@vermont.gov) at 10:55 am, Jun 01, 2016
  - REVIEWED By Scott Gurley (scott.gurley@state.vt.us) at 3:26 pm, May 26, 2016
  - REVIEWED By Jon Lemieux (jon.lemieux@vermont.gov) at 3:09 pm, May 24, 2016

Review Focus Notes:

GRADING, CURBING, SIDEWALK, DRAINAGE, SEWER AND WATER IMPROVEMENTS, SUBBASE, AND PAVEMENT ON NEW HORIZONTAL AND VERTICAL ALIGNMENT, AS WELL AS REHABILITATION AND OVERLAY AND WIDENING OF EXISTING STREETS, NEW TRAFFIC SIGNALS, LIGHTING, RAIL CROSSINGS, SIGNS, STRIPING, LANDSCAPING, AND A BOX CULVERT OVER STEVENS BROOK.

Print Form

Clear Form

Submit by Email

Quality Assurance Section

TRAFFIC DATA

POSTED SPEED = 25 MPH
DESIGN SPEED = 25 MPH

DESIGN ADT	2010	2030
NASON CONNECTOR	8,200vpd	8,600vpd
ALLEN STREET	11,200vpd	11,300vpd
FEDERAL STREET	12,100vpd	12,200vpd

T= 2%
K= 9%

SAINT ALBANS
Vermont

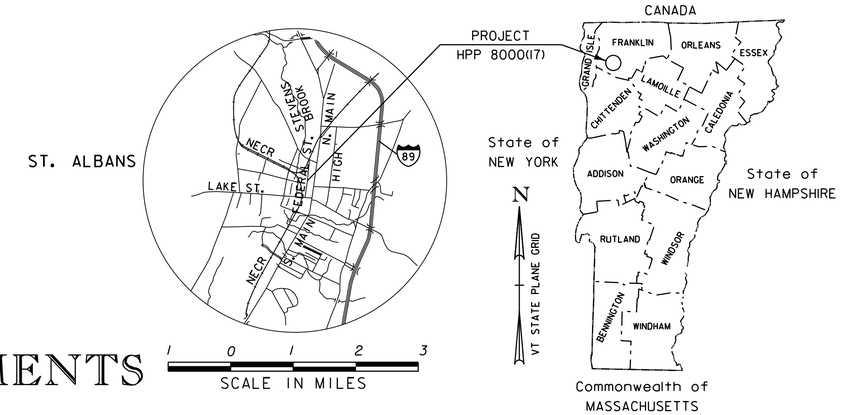

PROPOSED MOBILITY IMPROVEMENTS

Are these "Mobility" improvements or "Transportation" improvements? Lets not confuse people by using

CITY OF ST. ALBANS
COUNTY OF FRANKLIN

SOUTH MAIN STREET, NORTH MAIN STREET (CLASS I URBAN ARTERIALS)

LAKE STREET (CLASS II URBAN ARTERIAL)

LEMNAH DRIVE, ALLEN STREET, CATHERINE STREET, MARKET STREET (LOCAL ROADS)

FEDERAL STREET (CLASS II TOWN HIGHWAY) &

LOWER NEWTON STREET (CLASS I TOWN HIGHWAY)

BEGINNING AT A POINT ON SOUTH MAIN STREET (US 7) IN THE CITY OF ST. ALBANS, APPROXIMATELY 1.7 MILES NORTH OF THE GEORGIA TOWN LINE, CREATING A NEW CONNECTION AT SOUTH MAIN ST ACROSS FROM THE I-89 CONNECTOR TO THE NASON STREET AND LEMNAH DRIVE INTERSECTION, AND CONTINUING NORTHERLY ALONG LEMNAH DRIVE, TO ALLEN STREET, CATHERINE STREET, FEDERAL STREET, AND LOWER NEWTON STREET UNTIL RECONNECTING WITH US 7 (NORTH MAIN STREET) FROM LOWER NEWTON ROAD.
LENGTH OF PROJECT: 9200 FT = 1.74 MILES

Lower Newton St. or Road?

road

PROJECT DESCRIPTION

WORK TO BE PERFORMED UNDER THIS PROJECT INCLUDES GRADING, CURBING, SIDEWALK, DRAINAGE, SEWER AND WATER IMPROVEMENTS, SUBBASE, AND PAVEMENT ON NEW HORIZONTAL AND VERTICAL ALIGNMENT, AS WELL AS REHABILITATION AND OVERLAY AND WIDENING OF EXISTING STREETS, NEW TRAFFIC SIGNALS, LIGHTING, RAIL CROSSINGS, SIGNS, STRIPING, LANDSCAPING, A NEW ROUNDABOUT, AND A BOX CULVERT OVER STEVENS BROOK.

NASON ST. CONNECTOR POB STA 100+00.00 =
SOUTH MAIN ST. (US 7) POT 902+46.00
BEGIN PROJECT

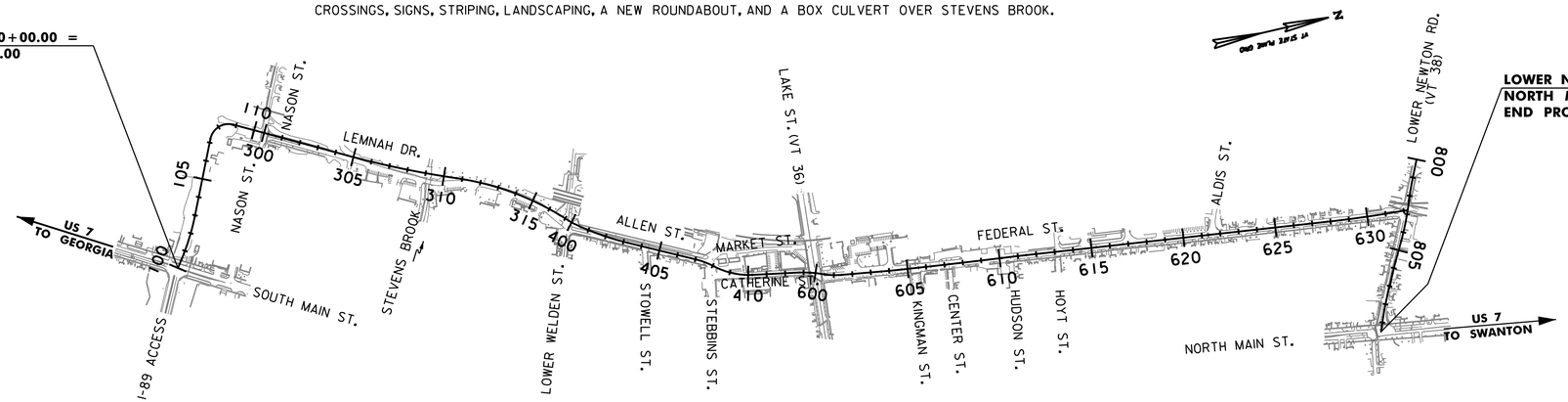

LOWER NEWTON ROAD POE STA 809+49.77 =
NORTH MAIN ST. (US 7) POT STA 1003+05.09
END PROJECT

PLAN
400 0 400
SCALE IN FEET

THESE PLANS ARE SUBJECT TO SUCH ENGINEERING CHANGES AS MAY BE REQUIRED BY THE FEDERAL HIGHWAY ADMINISTRATION OR THE DIRECTOR OF PROGRAM DEVELOPMENT.

CONSTRUCTION IS TO BE CARRIED ON IN ACCORDANCE WITH THESE PLANS AND THE STANDARD SPECIFICATIONS FOR CONSTRUCTION DATED 2011, AS APPROVED BY THE FEDERAL HIGHWAY ADMINISTRATION ON JULY 20, 2011 FOR USE ON THIS PROJECT, INCLUDING ALL SUBSEQUENT REVISIONS AND SUCH REVISED SPECIFICATIONS AND SPECIAL PROVISIONS AS ARE INCORPORATED IN THESE PLANS.

TEST LEVEL: 2

PRELIMINARY PLANS
MARCH 2016

SURVEYED BY : VHB, INC.
SURVEYED DATE : 2010
UPDATED: 2012

DATUM
VERTICAL NAVD 1929
HORIZONTAL NAD 1983

Is the vertical datum NAVD 88 or NGVD29? Sea Level Datum of 1929, also called the National Geodetic Vertical Datum of 1929 (NGVD 29) or the North American Vertical Datum of 1988 (NAVD 88).

PROJECT MANAGER : M. A. COLGAN

PROJECT NAME : ST. ALBANS
PROJECT NUMBER : HPP 8000(17)

SHEET 1 OF 230 SHEETS

vhb

VHB 57414.00

INDEX OF SHEETS

Missing Quantity Sheet & Tie Sheet

17-19 should be 'Drainage Detail Sheets'

1	TITLE SHEET
2	INDEX OF SHEETS
3	CONVENTIONAL SYMBOLOGY LEGEND SHEET
4-5	NOTES SHEET
6-13	TYPICAL SECTION SHEETS
14-19	CONSTRUCTION DETAILS SHEETS
20	ISLAND DETAIL SHEET
21	ALIGNMENT POINTS SHEET
22-27	ALIGNMENT LAYOUT SHEETS
28-43	ROADWAY LAYOUT SHEETS
44-49	INTERSECTION GRADING PLANS
50-69	PROFILES
70-76	DRAINAGE NOTES
77-93	GENERAL PLANS
94-109	SIGNING & STRIPING PLANS
110-124	TRAFFIC SIGNAL PLANS
125	TRAFFIC CONTROL NOTES
126	CONSTRUCTION APPROACH SIGNING LAYOUT
128	EPSC NARRATIVE
129-131	EPSC DETAIL SHEETS
132-149	EPSC PLANS
150-216	CROSS SECTIONS
217-230	STEVENS BROOK CULVERT REPLACEMENT PLANS
	UTILITY PLANS (BY ALDRICH & ELLIOTT)
	STREETSCAPE PLANS (BY SE GROUP)

Traffic Signal Plan Notes, 110-111

Drainage Plans?

Sign Summary Sheets?

Sheets or Plans? Index vs. sheets differ

127 & 128

layout or plans? Index vs. sheets differ

Should separate & label Box Culvert Sheets (i.e. Plan Layout sheet, Wingwall sheets, Bridge

No ROW Plans?

Utility Plans?

Not required until Final Plans

APPLICABLE VTRANS STANDARD DRAWINGS

A-76	STANDARDS FOR TOWN & DEVELOPMENT ROADS	3/3/2003	T-134	LIGHT POLE & TRANSFORMER BASE DETAILS	12/21/2015	D-3	TREATED GUTTERS	6/1/1994
B-71	STANDARD FOR RESIDENTIAL AND COMMERCIAL DRIVES	7/8/2005	T-17	TRAFFIC CONTROL MISCELLANEOUS DETAILS	8/6/2012	D-30	UNDERDRAIN CONSTRUCTION DETAILS	8/13/2007
D-20	HIGHWAY CROSSING FOR UNDERGROUND UTILITIES	3/3/2003	T-2	TRAFFIC SIGN GENERAL NOTES	2/12/2016	D-33	REINFORCED CONCRETE STRAIGHT HEADWALL	3/12/2007
D-22	SANITARY SEWER SYSTEMS	3/10/1995	T-24	TRAFFIC CONTROL FOR MAINTENANCE PAVEMENT MARKING OPERATION	8/6/2012	D-34	REINFORCED CONCRETE CRADLE HEADWALL	3/12/2007
E-121	STANDARD SIGN PLACEMENT - CONVENTIONAL ROAD	8/8/1995	T-28	CONSTRUCTION SIGN DETAILS	8/6/2012	D-4	VARIOUS DRAINAGE DETAILS	8/13/2007
E-127	ROUTE MARKINGS AT RURAL INTERSECTIONS	8/8/1995	T-30	CONSTRUCTION SIGN DETAILS	8/6/2012	D-6	REINFORCED CONCRETE DROP INLET W/GRATE (DITCHES)	6/1/1994
E-131B	BICYCLE GUIDE SIGN DETAILS	5/30/2003	T-35	CONSTRUCTION ZONE LONGITUDINAL DROP-OFFS	8/6/2012	D-8	REINFORCED CONCRETE DROP INLET WITH PRECAST COVER & GRATE	1/3/2000
E-136B	STATE ROUTE MARKER SIGN DETAILS	8/8/1995	T-36	CONSTRUCTION ZONE LONGITUDINAL DROP-OFFS FOR PAVING	8/6/2012	F-2	CHAIN LINK FENCE, TYPE I DETAILS	6/1/1994
E-136C	STATE NUMBERED TOWN HIGHWAY SIGN DETAILS	8/8/1995	T-45	SQUARE TUBE SIGN POST AND ANCHOR	1/2/2013	F-4	CHAIN LINK FENCE, TYPE II DETAILS	6/1/1994
E-140	REGULATORY SIGN DETAILS	8/30/1996	T-56	STANDARD SIGN PLACEMENT	10/26/2015	J-1	PROJECT AND BOUNDARY MARKERS	6/1/1994
E-142	REGULATORY SIGN DETAILS	9/20/1995	T-92	ROUTE MARKER FRAME DETAILS	10/26/2015	J-3	MAIL BOX SUPPORT DETAILS	8/7/1995
E-143	REGULATORY SIGN DETAILS	6/15/2004	T-93	DESTINATION SIGN DETAILS	10/26/2015			
E-144	REGULATORY SIGN DETAILS	3/29/1999	RR-1	RAIL CROSSING HIGHWAY STANDARDS PAVED CROSSING FOR GRAVEL OR PAVED HIGHWAYS	6/1/1994			
E-145A	REGULATORY SIGN DETAILS - LANE USE CONTROL SIGNS	12/23/1994	C-3A	SIDEWALK RAMPS	3/10/2008			
E-146	REGULATORY SIGN DETAILS	9/20/1995	C-3B	SIDEWALK RAMPS AND MEDIAN ISLANDS	3/10/2008			
E-170	TRAFF[illegible]GNALS PEDESTAL POST MOUN[illegible]	11/4/1999	B-12	SIDE ROAD INTERSECTION, DEPRESSED RAMP	6/1/1994			
E-171A	TRAFFIC CONTROL SIGNALS GENERAL NOTES & DETAILS	8/9/1995	B-17	GUARDRAIL, BRIDGES, REST AREA, TURNOUTS	2/23/1995			
E-171B	TRAFFIC CONTROL SIGNALS MISC. DETAILS	8/9/1995	B-5	SLOPE GRADING, EMBANKMENTS, MUCK	6/1/1994			
E-173	PULL BOXES AND JUNCTION BOXES	8/9/1995	C-10	CURBING	2/11/2008			
E-175	POWER DROP STANCHIONS	6/8/2009	C-2A	PORTLAND CEMENT CONCRETE SIDEWALK DRIVE ENTRANCES WITH SIDEWALK ADJACENT TO CURB	10/14/2005			
E-190	RAILROAD CROSSING SIGNS AND PAVEMENT MARKINGS	6/30/2003	C-2B	PORTLAND CEMENT CONCRETE SIDEWALK DRIVE ENTRANCES WITH SIDEWALK AND GREEN STRIP	10/14/2005			
E-191	PAVEMENT MARKING DETAILS	2/1/1999	D-10	REINFORCED CONCRETE DROP INLET TOP FOR BITUMINOUS CONCRETE CURB & GRANITE SLOPE EDGING	6/1/1994			
E-192	PAVEMENT MARKING DETAILS	10/12/2000	D-11	STEEL OR IRON GRATES& COVERS (TYPE A)	6/1/1994			
E-193	PAVEMENT MARKING DETAILS	8/18/1995	D-13	CONCRETE CATCH BASIN	1/3/2000			
T-1	TRAFFIC CONTROL GENERAL NOTES	8/6/2012	D-15	PRECAST REINF CONC. MH-GRATES, CAST IRON GRATE WITH FRAME, TYPE D & E	6/1/1994			
T-10	CONVENTIONAL ROADS CONSTRUCTION APPROACH SIGNING	8/6/2012						
T-133	LIGHT POLE FOUNDATION DETAILS	12/21/2015						

Are all these sign detail sheets needed, as most signs are now referenced to the SHSM

T Standards should be listed numerically.

PROJECT NAME: ST. ALBANS
PROJECT NUMBER: HPP 8000(17)

FILE NAME: 57414_INDEX.dgn
PROJECT LEADER: J. D. SALADINO
DESIGNED BY: D.M. PECK
INDEX OF SHEETS

PLOT DATE: 3/4/2016
DRAWN BY: A.J. GOUDREAU
CHECKED BY: M.J. SERVETAS
SHEET 2 OF 230

GENERAL INFORMATION

SYMBOLOGY LEGEND NOTE

THE SYMBOLOGY ON THIS SHEET IS INTENDED TO COVER STANDARD CONVENTIONAL SYMBOLOGY. THE SYMBOLOGY IS USED FOR EXISTING & PROPOSED FEATURES WITH HEAVIER LINEWEIGHT, IN COMBINATION WITH PROJECT ANNOTATION, AS NOTED ON PROJECT PLAN SHEETS. THIS LEGEND SHEET COVERS THE BASICS. SYMBOLOGY ON PLANS MAY VARY, PLAN ANNOTATIONS AND NOTES SHOULD BE USED TO CLARIFY AS NEEDED.

R.O.W. ABBREVIATIONS (CODES) & SYMBOLS

POINT	CODE	DESCRIPTION
	CH	CHANNEL EASEMENT
	CONST	CONSTRUCTION EASEMENT
	CUL	CULVERT EASEMENT
	D&C	DISCONNECT & CONNECT
	DIT	DITCH EASEMENT
	DR	DRAINAGE EASEMENT
	DRIVE	DRIVEWAY EASEMENT
	EC	EROSION CONTROL
	HWY	HIGHWAY EASEMENT
	I&M	INSTALL & MAINTAIN EASEMENT
	LAND	LANDSCAPE EASEMENT
	R&RES	REMOVE & RESET
	R&REP	REMOVE & REPLACE
	SR	SLOPE RIGHT
	UE	UTILITY EASEMENT
	(P)	PERMANENT EASEMENT
	(T)	TEMPORARY EASEMENT
■	BNDNS	BOUND SET
⊡	BNDNS	BOUND TO BE SET
●	IPNS	IRON PIN SET
◎	IPNS	IRON PIN TO BE SET
⊠	CALC	EXISTING ROW POINT
○	PROW	PROPOSED ROW POINT
[LENGTH]		LENGTH CARRIED ON NEXT SHEET

COMMON TOPOGRAPHIC POINT SYMBOLS

POINT	CODE	DESCRIPTION
	APL	BOUND APPARENT LOCATION
	BM	BENCH MARK
	BND	BOUND
	CB	CATCH BASIN
	COMB	COMBINATION POLE
	DITHR	DROP INLET THROATED DNC
	EL	ELECTRIC POWER POLE
	FPOLE	FLAGPOLE
	GASFIL	GAS FILLER
	GP	GUIDE POST
	GSO	GAS SHUT OFF
	GUY	GUY POLE
	GUYW	GUY WIRE
	GV	GATE VALUE
	H	TREE HARDWOOD
	HCTRL	CONTROL HORIZONTAL
	HVCTRL	CONTROL HORIZ. & VERTICAL
	HYD	HYDRANT
	IP	IRON PIN
	IPIPE	IRON PIPE
	LI	LIGHT - STREET OR YARD
	MB	MAILBOX
	MH	MANHOLE (MH)
	MM	MILE MARKER
	PM	PARKING METER
		PERENNIAL - SINGLE
		PERENNIAL - PLANTING BED
	PMK	PROJECT MARKER
	POST	POST STONE/WOOD
	RRSIG	RAILROAD SIGNAL
	RRSL	RAILROAD SWITCH LEVER
	S	TREE SOFTWOOD
	SAT	SATELLITE DISH
	SHRUB	SHRUB
	SIGN	SIGN
	STUMP	STUMP
	TEL	TELEPHONE POLE
	TIE	TIE
	TSIGN	SIGN W/DOUBLE POST
	VCTRL	CONTROL VERTICAL
	WELL	WELL
	WSO	WATER SHUT OFF

THESE ARE COMMON VAOT SURVEY POINT SYMBOLS FOR EXISTING FEATURES, ALSO USED FOR PROPOSED FEATURES WITH HEAVIER LINEWEIGHT, IN COMBINATION WITH PROPOSED ANNOTATION.

PROPOSED GEOMETRY CODES

CODE	DESCRIPTION
PC	POINT OF CURVATURE
PI	POINT OF INTERSECTION
CC	CENTER OF CURVE
PT	POINT OF TANGENCY
PCC	POINT OF COMPOUND CURVE
PRC	POINT OF REVERSE CURVE
POB	POINT OF BEGINNING
POE	POINT OF ENDING
STA	STATION PREFIX
AH	AHEAD STATION SUFFIX
BK	BACK STATION SUFFIX
D	CURVE DEGREE OF (100FT)
R	CURVE RADUIS OF
T	CURVE TANGENT LENGTH
L	CURVE LENGTH OF
E	CURVE EXTERNAL DISTANCE

UTILITY SYMBOLOGY

UNDERGROUND UTILITIES

UT	TELEPHONE
UE	ELECTRIC
UC	CABLE (TV)
UEC	ELECTRIC+CABLE
UET	ELECTRIC+TELEPHONE
UCT	CABLE+TELEPHONE
UECT	ELECTRIC+CABLE+TELEP.
G	GAS LINE
W	WATER LINE
S	SANITARY SEWER (SEPTIC)

ABOVE GROUND UTILITIES (AERIAL)

T	TELEPHONE
E	ELECTRIC
C	CABLE (TV)
EC	ELECTRIC+CABLE
ET	ELECTRIC+TELEPHONE
AER E&T	ELECTRIC+TELEPHONE
CT	CABLE+TELEPHONE
ECT	ELECTRIC+CABLE+TELEP.
	UTILITY POLE GUY WIRE

PROJECT CONSTRUCTION SYMBOLOGY

PROJECT DESIGN & LAYOUT SYMBOLOGY

CZ	CLEAR ZONE
	PLAN LAYOUT MATCHLINE

PROJECT CONSTRUCTION FEATURES

	TOP OF CUT SLOPE
	TOE OF FILL SLOPE
	STONE FILL
	BOTTOM OF DITCH ℄
	CULVERT PROPOSED
	STRUCTURE SUBSURFACE
PDF PDF	PROJECT DEMARCATION FENCE
BF BF	BARRIER FENCE
	TREE PROTECTION ZONE (TPZ)
	STRIPING LINE REMOVAL
	SHEET PILES

CONVENTIONAL BOUNDARY SYMBOLOGY

BOUNDARY LINES

TOWN LINE	TOWN BOUNDARY LINE
COUNTY LINE	COUNTY BOUNDARY LINE
STATE LINE	STATE BOUNDARY LINE
	PROPOSED STATE R.O.W. (LIMITED ACCESS)
	PROPOSED STATE R.O.W.
	STATE ROW (LIMITED ACCESS)
	STATE ROW
	TOWN ROW
	PERMANENT EASEMENT LINE (P)
	TEMPORARY EASEMENT LINE (T)
	SURVEY LINE
P/L P/L	PROPERTY LINE (P/L)
SR SR SR	SLOPE RIGHTS
6f 6f	6F PROPERTY BOUNDARY
4f 4f	4F PROPERTY BOUNDARY
HAZ HAZ	HAZARDOUS WASTE

EPSC LAYOUT PLAN SYMBOLOGY

EPSC MEASURES

	FILTER CURTAIN
	SILT FENCE
	SILT FENCE WOVEN WIRE
	CHECK DAM
	DISTURBED AREAS REQUIRING RE-VEGETATION
	EROSION MATTING

ENVIRONMENTAL RESOURCES

	WETLAND BOUNDARY
	RIPARIAN BUFFER ZONE
	WETLAND BUFFER ZONE
	SOIL TYPE BOUNDARY
T&E	THREATENED & ENDANGERED SPECIES
HAZ HAZ	HAZARDOUS WASTE AREA
AG	AGRICULTURAL LAND
HABITAT	FISH & WILDLIFE HABITAT
FLOOD PLAIN	FLOOD PLAIN
OHW	ORDINARY HIGH WATER (OHW)
	STORM WATER
	USDA FOREST SERVICE LANDS
	WILDLIFE HABITAT SUIT/CONN

ARCHEOLOGICAL & HISTORIC

ARCH	ARCHEOLOGICAL BOUNDARY
HISTORIC DIST	HISTORIC DISTRICT BOUNDARY
HISTORIC	HISTORIC AREA
H	HISTORIC STRUCTURE

CONVENTIONAL TOPOGRAPHIC SYMBOLOGY

EXISTING FEATURES

	ROAD EDGE PAVEMENT
	ROAD EDGE GRAVEL
	DRIVEWAY EDGE
	DITCH
	FOUNDATION
	FENCE (EXISTING)
	FENCE WOOD POST
	FENCE STEEL POST
	GARDEN
	ROAD GUARDRAIL
	RAILROAD TRACKS
	CULVERT (EXISTING)
	STONE WALL
	WALL
	WOOD LINE
	BRUSH LINE
	HEDGE
	BODY OF WATER EDGE
	LEDGE EXPOSED

vhb

PROJECT NAME:	ST. ALBANS
PROJECT NUMBER:	HPP 8000(17)

FILE NAME: 57414_LegendSheet.dgn	PLOT DATE: 3/4/2016
PROJECT LEADER: M.A. COLGAN	DRAWN BY: A.J. GOUDREAU
DESIGNED BY: VTRANS	CHECKED BY: D.M. PECK
CONVENTIONAL SYMBOLOGY LEGEND	SHEET 3 OF 230

GENERAL NOTES

1. ALL MATERIALS AND CONSTRUCTION SHALL CONFORM TO THE STATE OF VERMONT AGENCY OF TRANSPORTATION'S STANDARD SPECIFICATIONS FOR CONSTRUCTION, DATED 2011, AND ITS LATEST REVISIONS, AND SUCH SPECIFICATIONS AND SPECIAL PROVISIONS AS ARE INCORPORATED IN THE FINAL CONTRACT DOCUMENTS.

2. PER ADA GUIDELINES, SIDEWALK CROSS SLOPES SHALL NOT EXCEED 2%.

3. ANY WASTE MATERIAL SHALL BE REMOVED AND HAULED TO A PREVIOUSLY APPROVED FACILITY.

UTILITY NOTES

1. THE LOCATIONS, SIZES, AND TYPES OF EXISTING UTILITIES ARE SHOWN AS AN APPROXIMATE REPRESENTATION ONLY. THE OWNER OR DESIGN ENGINEER HAVE NOT INDEPENDENTLY VERIFIED ALL OF THIS INFORMATION AS SHOWN ON THE PLANS. THE UTILITY INFORMATION SHOWN DOES NOT GUARANTEE THE ACTUAL EXISTENCE, SERVICEABILITY, OR OTHER DATA CONCERNING THE UTILITIES, NOR DOES IT GUARANTEE AGAINST THE POSSIBILITY THAT ADDITIONAL UTILITIES MAY BE PRESENT THAT ARE NOT SHOWN ON THE PLANS. PRIOR TO ORDERING MATERIALS AND BEGINNING CONSTRUCTION, THE CONTRACTOR SHALL VERIFY AND DETERMINE THE EXACT LOCATIONS, SIZES, AND ELEVATIONS OF THE POINTS OF CONNECTIONS TO EXISTING UTILITIES AND, SHALL CONFIRM THAT THERE ARE NO INTERFERES WITH EXISTING UTILITIES AND THE PROPOSED UTILITY ROUTES, INCLUDING ROUTES WITHIN THE PUBLIC RIGHTS OF WAY.

2. WHERE AN EXISTING UTILITY IS FOUND TO CONFLICT WITH THE PROPOSED WORK, OR EXISTING CONDITIONS DIFFER FROM THOSE SHOWN SUCH THAT THE WORK CANNOT BE COMPLETED AS INTENDED, THE LOCATION, ELEVATION, AND SIZE OF THE UTILITY SHALL BE ACCURATELY DETERMINED AND THE INFORMATION FURNISHED IN WRITING TO THE RESIDENT ENGINEER FOR THE RESOLUTION OF THE CONFLICT.

3. SET CATCH BASIN RIMS, AND INVERTS OF SEWERS, DRAINS, AND DITCHES IN ACCORDANCE WITH ELEVATIONS ON THE GENERAL PLANS, CROSS SECTIONS AND DRAINAGE NOTES.

4. RIM ELEVATIONS FOR DRAIN AND SEWER MANHOLES, WATER VALVE COVERS, GAS GATES, ELECTRIC AND TELEPHONE PULL BOXES, AND MANHOLES, AND OTHER SUCH ITEMS, ARE APPROXIMATE AND SHALL BE SET/RESET AS FOLLOWS:
   A. PAVEMENTS AND CONCRETE SURFACES: FLUSH
   B. ALL SURFACES ALONG ACCESSIBLE ROUTES: FLUSH
   C. LANDSCAPE, LOAM AND SEED, AND OTHER EARTH SURFACE AREAS: ONE INCH ABOVE SURROUNDING AREA AND TAPER EARTH TO THE RIM ELEVATION.

5. ALL DRAINAGE AND SANITARY STRUCTURE INTERIOR DIAMETERS (4' MIN.) SHALL BE VERIFIED BY THE MANUFACTURER BASED ON THE PIPE CONFIGURATIONS SHOWN ON THESE PLANS AND LOCAL MUNICIPAL STANDARDS.

6. THE USE OF BRICK AND MORTAR TO ADJUST THE ELEVATION OF DRAINAGE OR SANITARY STRUCTURES IS PROHIBITED. ALL ELEVATION ADJUSTMENTS SHALL BE MADE USING EITHER GRADE RINGS OR A SYNTHETIC RISER.

7. ALL CONNECTIONS BETWEEN PRECAST DRAINAGE STRUCTURES AND NEW DRAINAGE PIPES SHALL BE A BOOTED CONNECTION. CORING AND BOOTS WILL BE INCIDENTAL TO THE PIPE.

8. CONTRACTOR IS RESPONSIBLE FOR IDENTIFYING AND ADJUSTING ALL CURB STOPS, WATER VALVES, MANHOLES, & DRAINAGE STRUCTURES WITHIN THE PROJECT LIMITS TO TO THE FINAL GRADE ELEVATION.

9. CURRENT UTILITY CONTACT INFORMATION IS PROVIDED AS FOLLOWS. THE CONTRACTOR SHALL BE RESPONSIBLE FOR ACQUIRING ADDITIONAL AND/OR MORE UP TO DATE CONTACT INFORMATION AS NEEDED.

   CITY OF ST. ALBANS DIRECTOR OF PUBLIC WORKS
   ALLEN ROBTOY: 802-524-1500 X267
   A.ROBTOY@STALBANSVT.COM

   GREEN MOUNTAIN POWER
   ROSE DUBOIS: 802-527-6348 X190
   ROSE.DUBOIS@GREENMOUNTAINPOWER.COM

   VERMONT GAS
   LEE BROWN: 802-863-4511
   LBROWN@VERMONTGAS.COM

   ~~FAIRPOINT~~
   ~~KYLE BOUCHARD: 802-863-0702~~
   ~~KBOUCHARD @FAIRPOINT.COM~~

   ~~COMCAST~~
   ~~CONRAD RITCHIE: 802-846-2414~~
   ~~CONRAD.RITCHIE@CABLE.COMCAST.COM~~

   ~~LEVEL 3~~
   ~~RICK MILLER: 702-888-7568~~
   ~~RICK.MILLER@LEVEL3.COM~~

   ~~VTEL~~
   ~~JOSEPH C. HARBESON: 802-885-7740~~
   ~~JHARBES@VERMONTEL.COM~~

Conflicting Information: Drainage Detail Sheet, Pond Outlet Control

Conflicting Information: Drainage Detail Sheets calls for using Brick and Mortar to adjust elevations vs. using grade rings or synthetic riser

Fairpoint
Bill Richardson 802-951-1516
wrichardson2@fairpoint.com

Comcast
Kaillum Tucker 802-355-5706
Kaillum_Tucker@cable.comcast.com

Level 3
Mike Reilly 802-846-1666
Mike.Reilly@Level3.com

VTel
Judy Paton 802-289-2104
patonje@vermontel.com

10. EXISTING OVERHEAD FACILITIES OWNED BY THE COMPANIES NOTED ABOVE, PASS THROUGH THE PROJECT. THE CONTRACTOR IS ADVISED TO USE CAUTION WHILE WORKING AROUND OVERHEAD UTILITY LINES.

11. EXISTING UNDERGROUND FACILITIES OWNED BY FAIR POINT COMMUNICATIONS, GREEN MOUNTAIN POWER, VERMONT GAS AND THE CITY OF ST ALBANS (SANITARY AND STORM SEWER & WATER) PASS THROUGH THE PROJECT. THE CONTRACTOR IS ADVISED TO USE CAUTION WHILE WORKING AROUND UNDERGROUND UTILITY LINES. THE CONTRACTOR IS ALSO ADVISED THAT TEMPORARY SHORING AND SUPPORT OF UNDERGROUND UTILITIES MAY BE REQUIRED WHEN PERFORMING TRENCH EXCAVATIONS SO AS TO PREVENT DAMAGE TO THESE UTILITIES.

12. EXISTING TELEPHONE MANHOLES OWNED BY FAIR POINT COMMUNICATIONS MAY REQUIRE MINOR ADJUSTMENTS TO MATCH THE NEW FINISHED PAVEMENT ELEVATIONS. NECESSARY ELEVATION ADJUSTMENTS TO THESE TELEPHONE MANHOLES BY THE CONTRACTOR SHALL BE COORDINATED WITH REPRESENTATIVES FROM FAIR POINT.

13. EXISTING SEWER MANHOLES OWNED BY THE CITY OF ST. ALBANS MAY REQUIRE ADJUSTMENTS TO MATCH THE NEW FINISHED PAVEMENT ELEVATION. NECESSARY ELEVATION ADJUSTMENTS TO CITY-OWNED SEWER MANHOLES SHALL BE PERFORMED BY THE CONTRACTOR IN ACCORDANCE WITH VTRANS STANDARDS AND CONSTRUCTION SPECIFICATIONS.

14. EXISTING WATER VALVES OWNED BY THE CITY OF ST. ALBANS MAY REQUIRE ADJUSTMENTS TO MATCH THE NEW FINISHED PAVEMENT ELEVATION. NECESSARY ELEVATION ADJUSTMENTS TO CITY-OWNED WATER VALVES SHALL BE PERFORMED BY THE CONTRACTOR IN ACCORDANCE WITH VTRANS STANDARDS AND CONSTRUCTION SPECIFICATIONS.

15. EMPLOYEES OR AGENTS OF THOSE OWNING AERIAL OR UNDERGROUND FACILITIES ARE TO BE ALLOWED FREE AND FULL ACCESS WITHIN THE PROJECT LIMITS WITH THE TOOLS, MATERIALS, AND EQUIPMENT NECESSARY TO INSTALL, OPERATE, MAINTAIN, PLACE, REPLACE, RELOCATE, AND REMOVE THEIR FACILITIES.

16. THERE WILL BE NO EXTRA COMPENSATION PAID TO THE CONTRACTOR FOR ANY INCONVENIENCE CAUSED BY WORKING AROUND AND WITH THE OWNERS OF THESE UTILITY FACILITIES.

how will this be paid?

17. THE CONTRACTOR IS ADVISED THAT EXPLORATORY EXCAVATION TO LOCATE EXISTING UNDERGROUND FACILITIES WILL BE NECESSARY TO PROTECT THESE FACILITIES FROM DAMAGE AND TO VERIFY THE LOCATIONS OF MAJOR EQUIPMENT FOUNDATIONS PRIOR TO ANY EQUIPMENT BEING ORDERED. WHERE DIRECTED BY THE ENGINEER, THESE UTILITIES SHALL BE LOCATED AND/OR EXPOSED BY METHODS SUCH AS AIR/VACUUM EXCAVATION AND/OR HAND DIGGING TO DETERMINE THEIR EXACT LOCATION.

18. CONFLICTS BETWEEN THE PROPOSED WORK AND EXISTING PRESSURIZED GAS LINES ARE ANTICIPATED ON THIS PROJECT AND THE CONTRACTOR SHALL MAKE ARRANGEMENTS TO HAVE GAS COMPANY PERSONNEL PRESENT WHEN CONDUCTING EXPLORATORY EXCAVATIONS TO DETERMINE THE EXACT LOCATIONS OF THE GAS LINES. IF GAS LINE RELOCATIONS ARE NECESSARY THE CONTRACTOR SHALL ACCOMMODATE THE GAS COMPANY NEEDS WITH RESPECT TO EXCAVATION AND BACKFILL FOR THE EXISTING AND RELOCATED GAS LINES.

19. ACT NO. 86 OF 1987 (30 VSA CHAPTER 86) (7/32 DIG SAFE 9/32) REQUIRES THAT NOTICE BE GIVEN PRIOR TO MAKING AN EXCAVATION. IT IS SUGGESTED THAT THE PERMIT HOLDER OR HIS/HER CONTRACTOR TELEPHONE 1-888-344-7233 AT LEAST 48 HOURS BEFORE, AND NOT MORE THAN 30 DAYS BEFORE, BEGINNING ANY EXCAVATION AT ANY LOCATION.

20. SHOULD THE CONTRACTOR DESIRE ADDITIONAL ADJUSTMENTS OF THE UTILITY FACILITIES FOR HIS/HER CONVENIENCE, PROPER ARRANGEMENTS SHALL BE MADE IN CONFORMANCE WITH SUBSECTION 105.07 OF THE STANDARD SPECIFICATIONS FOR CONSTRUCTION.

Should have a similar condition for VT Gas valve boxes.

COORDINATION WITH RAILROAD

1. WORK IDENTIFIED IN THE PROJECT PLANS AND DOCUMENTS ON NASON ST, LOWER WELDEN ST, LAKE ST AND ON THE WEST SIDES OF LEMNAH DR, ALLEN ST, AND MARKET ST INCLUDE IMPACTS ALONG AND ACROSS RAILROAD PROPERTY. THE CONTRACTOR SHALL BE RESPONSIBLE FOR SUBMITTING AN APPLICATION AND ALL ASSOCIATED FEES FOR A "CONTRACTORS ACCESS/OCCUPANCY ON RAILROAD PROPERTY" PERMIT FROM AND TO GENESEE & WYOMING RAILROAD SERVICES INC.

   THE CONTRACTOR SHALL COMPLETE AND SUBMIT THE GENESEE & WYOMING CONTRACTORS ACCESS/OCCUPANCY ON RAILROAD PROPERTY FORM PRIOR TO COMMENCING ANY WORK ONCE THE CONTRACT HAS BEEN AWARDED.

   THE FOLLOWING IS AN EXCERPT FROM THE GENESEE & WYOMING WEBSITE REGARDING ACCESSING THE RAILROAD PROPERTY:

   "ANY ENTRY OR CONSTRUCTION ACTIVITIES ON RAILROAD RIGHT OF WAY MUST BE AUTHORIZED BY THE RAILROAD IN WRITING. WRITTEN AUTHORIZATION IS OBTAINED THROUGH A RIGHT OF ENTRY PERMIT OR CONTRACTOR OCCUPANCY/ACCESS AGREEMENT. THE APPLICATION IS ACCESSIBLE VIA THE LINK PROVIDED BELOW.

   THE APPLICANT MUST SUBMIT THE COMPLETED APPLICATION TO THE REAL ESTATE DEPARTMENT INCLUDING A CHECK OR MONEY ORDER, TO COVER THE NON-REFUNDABLE FEE OF $1,500 MADE PAYABLE TO THE RAILROAD. THE APPLICATION MUST INCLUDE RAILROAD MILEPOST, RAILROAD SUBDIVISION, AND SCOPE OF WORK. IF ANY OF THESE ITEMS ON THE APPLICATION ARE INCOMPLETE, THE APPLICATION WILL BE IMMEDIATELY REJECTED.

   THE STANDARD TERM FOR A RIGHT OF ENTRY PERMIT OR CONTRACTOR OCCUPANCY ACCESS AGREEMENT IS SIXTY (60) DAYS. LONGER TERMS ARE REVIEWED ON A CASE BY CASE BASIS AND MAY BE ASSESSED ADDITIONAL FEES.

   UPON APPROVAL OF THE APPLICATION, THE REAL ESTATE DEPARTMENT WILL DRAFT AN AGREEMENT AND FORWARD TO THE APPLICANT FOR SIGNATURE. APPLICATION DOES NOT GUARANTEE APPROVAL. THE APPLICANT MUST THEN RETURN THE SIGNED DOCUMENT TO THE REAL ESTATE DEPARTMENT ALONG WITH THE PERTINENT CERTIFICATE OF INSURANCE OUTLINED IN THE AGREEMENT. ONCE IN RECEIPT OF THESE DOCUMENTS, THE AGREEMENT WILL THEN BE EXECUTED ON BEHALF OF THE RAILROAD.

   FOR "STANDARD PROCESSING", THE ENTIRE PROCESS TAKES BETWEEN 6-8 WEEKS. "EXPEDITED PROCESSING" WILL REDUCE THE PROCESSING TIME TO BETWEEN 1-2 WEEKS AND COSTS AN ADDITIONAL $1,750. IF THE APPLICATION AND PLANS REQUIRE ENGINEERING APPROVAL, AND ARE RETURNED TO APPLICANT FOR REVISIONS IN ORDER TO MEET REQUIRED SPECIFICATIONS, THE EXPEDITED PROCESS COULD TAKE LONGER THAN 2 WEEKS.

2. THE CONTRACTOR SHALL BE RESPONSIBLE FOR ALL INSURANCE AND FLAGGING REQUIREMENTS STIPULATED BY THE RAILROAD FOR WORK WITHIN THEIR ROW. SEE INSURANCE AND RAILROAD AGREEMENT SECTIONS OF THE CONTRACT DOCUMENTS FOR MORE INFORMATION.

3. MATERIAL EXCAVATED FROM WITHIN THE RAILROAD ROW OR SURFACE WATER EXPENDED DURING CONSTRUCTION MAY CONTAIN CONTAMINATED MATERIAL. CONTAMINATED MATERIAL IF FOUND SHALL BE HANDLED BY THE CONTRACTOR IN ACCORDANCE WITH THE SOIL MANAGEMENT PLAN WHICH IS PART OF THE CONTRACT DOCUMENTS.

CONSTRUCTION NOTES

that are still in compliance with the MUTCD. All non-compliant sign will be disposed of accordingly.

1. THE CONTRACTOR SHALL ERECT, MAINTAIN, REMOVE, AND/OR RESET AS REQUIRED ALL ON-PROJECT CONSTRUCTION SIGNS AND BARRICADES. ALL SIGNS AND BARRICADES SHALL BE INSPECTED AND REPAIRED DAILY. ALL SIGNS AND BARRICADES SHALL CONFORM TO THE LATEST VERSION OF THE MUTCD AND SHALL BE CLEANED OF DUST AND DEBRIS WEEKLY.

2. ANY EXISTING SIGNS NOT REUSED SHALL REMAIN THE PROPERTY OF THE CITY OF ST. ALBANS. THESE SIGNS SHALL BE REMOVED BY THE CONTRACTOR AND STOCKPILED FOR REMOVAL BY THE CITY. STOCKPILE LOCATION TO BE DETERMINED BY THE CITY.

See comment below on granite curb, should identify the location the salvage signs are to be delivered to

Doesn't this conflict with the first sentence?

3. FULL ACCESS TO ALL DRIVES WITHIN THE PROJECT LIMITS SHALL BE MAINTAINED AT ALL TIMES. IF FULL ACCESS CANNOT BE MAINTAINED, THE CONTRACTOR SHALL CONTACT AND COORDINATE WITH THE BUSINESS OR PROPERTY OWNER AT LEAST 24 HOURS IN ADVANCE OF TEMPORARILY CLOSING OFF THE ACCESS.

4. THE CONTRACTOR SHALL VERIFY THE LOCATION OF ALL BURIED AND AERIAL UTILITIES AND POLES PRIOR TO STARTING WORK. THE CONTRACTOR SHALL COORDINATE WITH ALL UTILITY OWNERS TO CONFIRM ACTUAL LOCATIONS PRIOR TO CONSTRUCTION.

   DIG-SAFE (1-888-344-7233)

   CONTRACTOR SHALL COORDINATE THE ADJUSTMENT OF ANY EXISTING GATE VALVES WITH THE OWNER OF THE GAS LINES. ADJUSTMENT OF GAS VALVES SHALL BE DONE BY THE GAS COMPANY.

5. THE FOLLOWING IS A LIST OF CITY CONTACTS THE CONTRACTOR SHALL NOTIFY PRIOR TO BEGINNING ANY EXCAVATION. THE CITY OF ST. ALBANS SHALL REQUIRE AT LEAST 7 DAYS NOTIFICATION:

   CITY OF ST. ALBANS:
   ALLEN ROBTOY, DIRECTOR OF PUBLIC WORKS;
   (802) 524-1500, EXT. 267
   CHIP SAWYER, DIRECTOR OF PLANNING AND DEVELOPMENT;
   (802) 524-1500, EXT. 259

6. CONTRACTOR SHALL BE RESPONSIBLE FOR SITE SECURITY AND JOB SAFETY. CONSTRUCTION ACTIVITIES SHALL BE IN ACCORDANCE WITH OSHA STANDARDS, STATE & LOCAL REQUIREMENTS.

7. AREAS OUTSIDE THE LIMITS OF PROPOSED WORK DISTURBED BY THE CONTRACTOR'S OPERATIONS SHALL BE RESTORED BY THE CONTRACTOR TO THEIR ORIGINAL CONDITION AT THE CONTRACTOR'S EXPENSE.

8. IN THE EVENT THAT SUSPECTED CONTAMINATED SOIL, GROUNDWATER, AND OTHER MEDIA ARE ENCOUNTERED DURING EXCAVATION AND CONSTRUCTION ACTIVITIES BASED ON VISUAL, OLFACTORY, OR OTHER EVIDENCE, THE CONTRACTOR SHALL STOP WORK IN THE VICINITY OF THE SUSPECT MATERIAL TO AVOID FURTHER SPREADING OF THE MATERIAL, AND SHALL NOTIFY THE RESIDENT ENGINEER IMMEDIATELY SO THAT THE APPROPRIATE TESTING AND SUBSEQUENT ACTION CAN BE TAKEN.

9. DAMAGE RESULTING FROM CONTRACTOR CONSTRUCTION LOADS SHALL BE REPAIRED BY THE CONTRACTOR AT NO ADDITIONAL COST TO OWNER.

10. CONTRACTOR SHALL CONTROL STORMWATER RUNOFF DURING CONSTRUCTION TO PREVENT ADVERSE IMPACTS TO OFF SITE AREAS, AND SHALL BE RESPONSIBLE TO REPAIR RESULTING DAMAGES, IF ANY, AT NO COST TO OWNER.

11. CONTRACTOR IS RESPONSIBLE FOR DEVELOPING A DETAILED TRAFFIC CONTROL PLAN AND MAINTAINING VEHICULAR AND PEDESTRIAN TRAFFIC IN ACCORDANCE WITH THE TRAFFIC CONTROL NOTES IN THESE PLANS, AND IN ACCORDANCE WITH SECTION 641 FOR TRAFFIC CONTROL AS DEFINED IN THE VERMONT AGENCY OF TRANSPORTATION STANDARD SPECIFICATIONS FOR CONSTRUCTION BOOK, DATED 2011 AND THE LATEST VERSION OF THE MUTCD.

12. ALL EXISTING CURB WITHIN THE PROJECT LIMITS SHALL BE REMOVED AND REPLACED AS SHOWN IN PLANS. GRANITE CURB SHALL BE SALVAGED TO THE CITY. CONCRETE CURB SHALL BE DISPOSED BY THE CONTRACTOR.

Suggest having the curbing delivered to a specific location, such as the City Garage, by the contractor. Agree with comment below, need to identify how this is

Is this incidental work?

PROJECT NAME: ST. ALBANS	
PROJECT NUMBER: HPP 8000(17)	
FILE NAME: 57414_NOTES.dgn	PLOT DATE: 3/4/2016
PROJECT LEADER: G.L. BAKOS	DRAWN BY: M. BOGUE
DESIGNED BY: D.M. PECK	CHECKED BY: M.J. SERVETAS
GENERAL NOTES (SHEET 2 OF 2)	SHEET 5 OF 230

TYPICAL SECTIONS

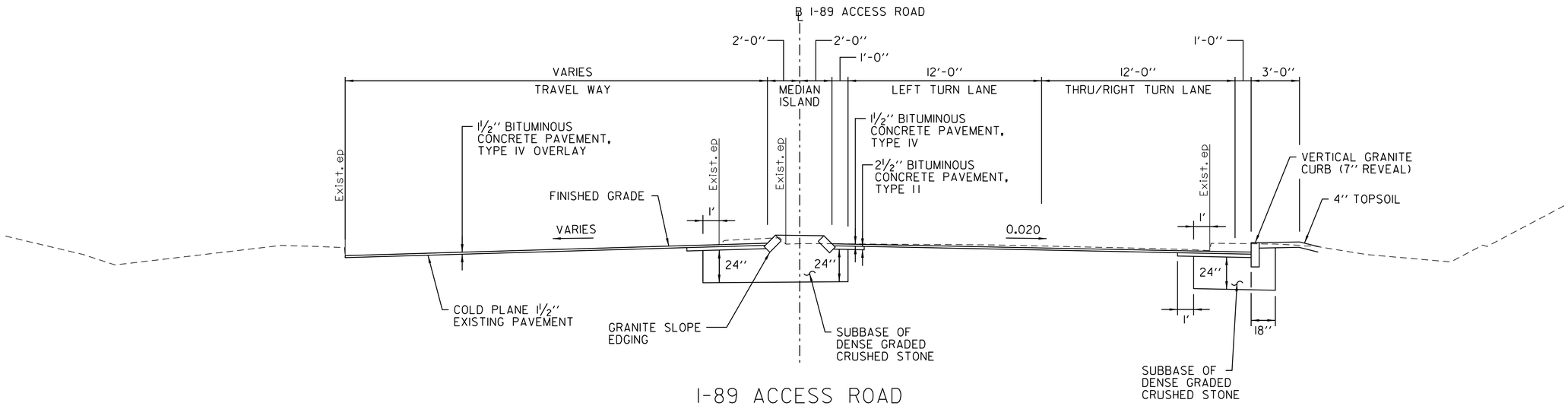

I-89 ACCESS ROAD

NORMAL SECTION
NOT TO SCALE

NOTES

1. AT ALL DRIVES CONSTRUCT SPECIAL PROVISION (PORTLAND CEMENT REINF. CONCRETE SIDEWALK, 8 INCH) OVER 12" SUBBASE OF DENSE GRADED CRUSHED STONE.
2. INSTALL 2-FOOT LONG #5 SMOOTH REINFORCING BARS, GREASED, SPACED 2-FEET APART AT ALL CONCRETE SIDEWALK CONSTRUCTION JOINTS. BARS SHALL BE SET MID-DEPTH OF CONCRETE SIDEWALK.
3. STEEL REINFORCING FOR CONCRETE SIDEWALK SHALL BE INCLUDED IN THE UNIT PRICE BID FOR THE APPROPRIATE SPECIAL PROVISION (PORTLAND CEMENT REINFORCED CONCRETE SIDEWALK) ITEMS.
4. SIDEWALK RAMP DETECTABLE WARNING SURFACES SHALL BE TRUNCATED DOME DETECTABLE WARNING CAST IRON PLATES FROM THE VTRANS APPROVED PRODUCTS LIST.
5. SAWCUT OF EXISTING PAVEMENT, CONCRETE BASE, OR SIDEWALK SHALL BE INCIDENTAL TO THE RELATED ITEMS (TYP) AND NO SEPARATE PAYMENT WILL BE MADE.
6. BITUMINOUS TACK COAT (ITEM 404.65) SHALL BE PLACED ON ALL ADJACENT SURFACES (BOTH HORIZONTAL AND VERTICAL) PRIOR TO PLACEMENT OF SUBSEQUENT BITUMIONOUS PAVEMENT COURSES.

PROJECT NAME: ST. ALBANS	
PROJECT NUMBER: HPP 8000(17)	
FILE NAME: 57414_TYP.dgn	PLOT DATE: 3/4/2016
PROJECT LEADER: M.A. COLGAN	DRAWN BY: DMP / WAD
DESIGNED BY: D.M. PECK	CHECKED BY: G.L. BAKOS
TYPICAL SECTION (SHEET 1 OF 8)	SHEET 6 OF 230

VHB 57414.00

TYPICAL SECTIONS

MATERIAL TOLERANCES	
MATERIAL ITEM	THICKNESS TOLERANCE
PAVEMENT (FULL DEPTH)	± 1/4" (TOTAL THICKNESS)
SUBBASE	1/2"
SAND BORROW	1"

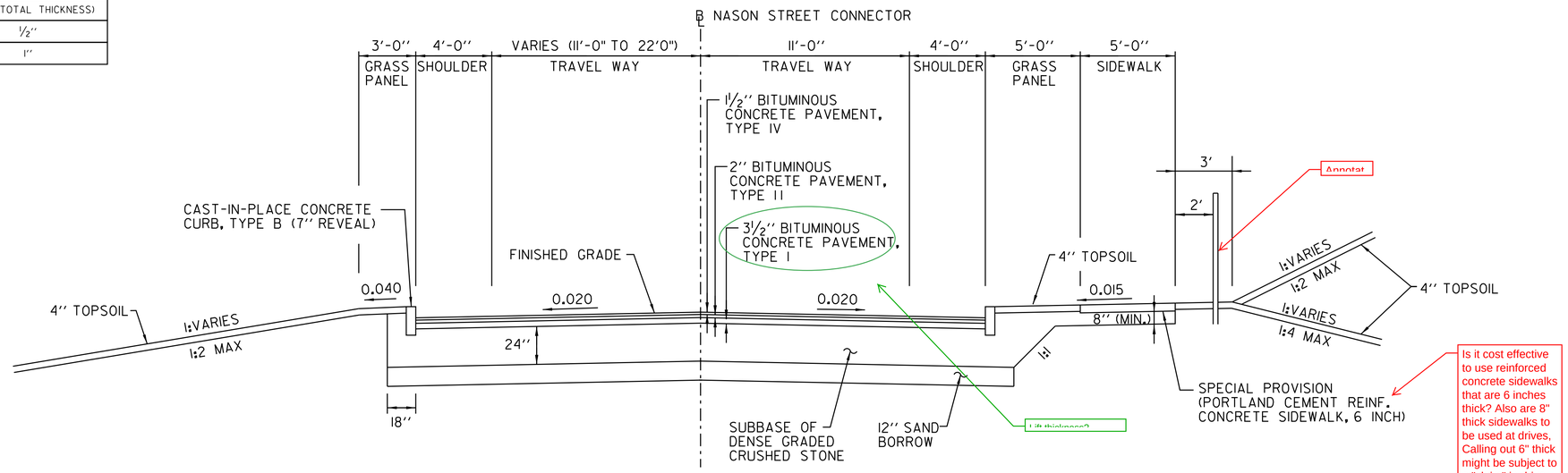

Annotat

Lift thickness?

Is it cost effective to use reinforced concrete sidewalks that are 6 inches thick? Also are 8" thick sidewalks to be used at drives, Calling out 6" thick might be subject to a "claim" in drive locations, where 8" is to be used

NASON STREET CONNECTOR

NORMAL SECTION
NOT TO SCALE

What is the maximum super-elevation that should be used in an urban setting?

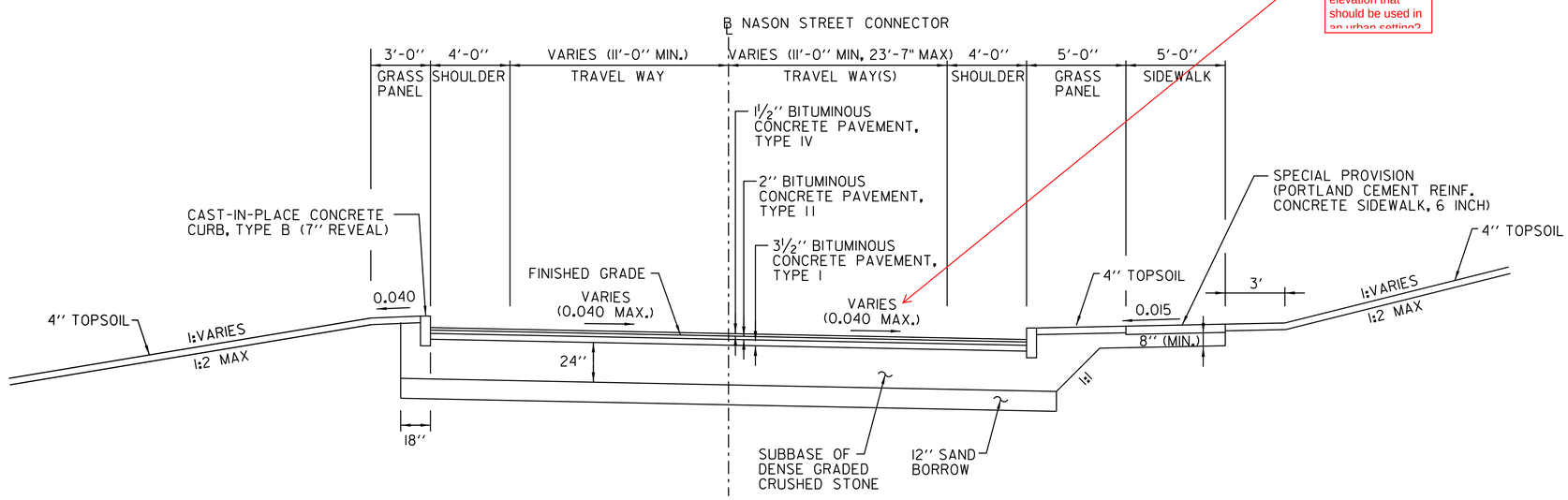

NASON STREET CONNECTOR

SUPERELEVATED SECTION
NOT TO SCALE

PROJECT NAME: ST. ALBANS	
PROJECT NUMBER: HPP 8000(17)	
FILE NAME: 57414_TYP.dgn	PLOT DATE: 3/4/2016
PROJECT LEADER: M.A. COLGAN	DRAWN BY: DMP / WAD
DESIGNED BY: D.M. PECK	CHECKED BY: G.L. BAKOS
TYPICAL SECTION (SHEET 2 OF 8)	SHEET 7 OF 230

VHB 57414.00

TYPICAL SECTIONS

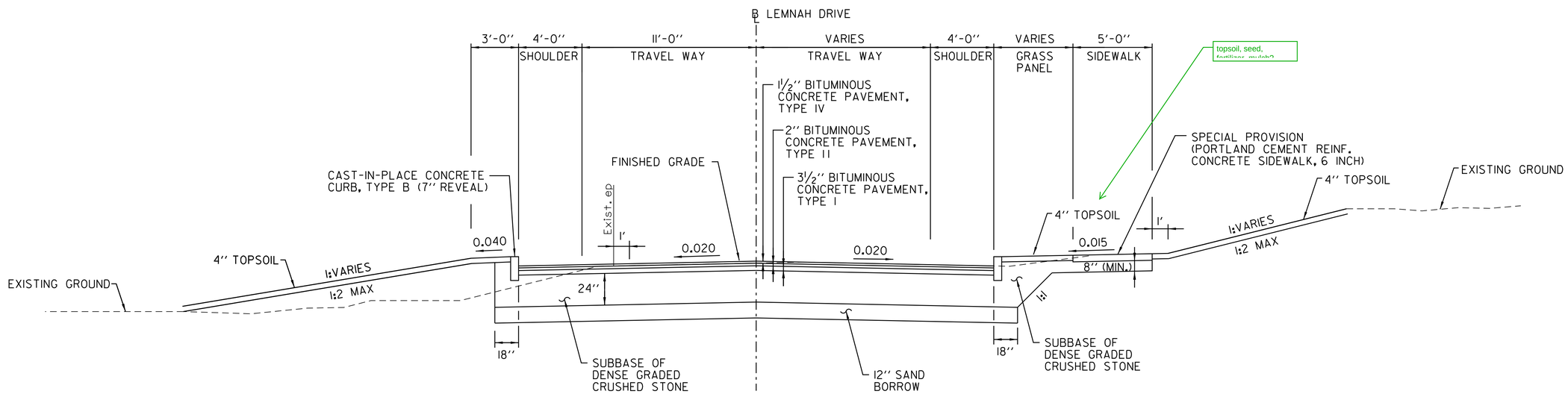

LEMNAH DRIVE & ALLEN STREET

(STA 302+50 - 315+44)
(STA 403+00 - 408+50)
NOT TO SCALE

Sta. 315+42.4 According to Roadway Layout Sheet

Sta. 403+07.9 calls for 16.4' from CL to curb

Not Shown on Layout sheet

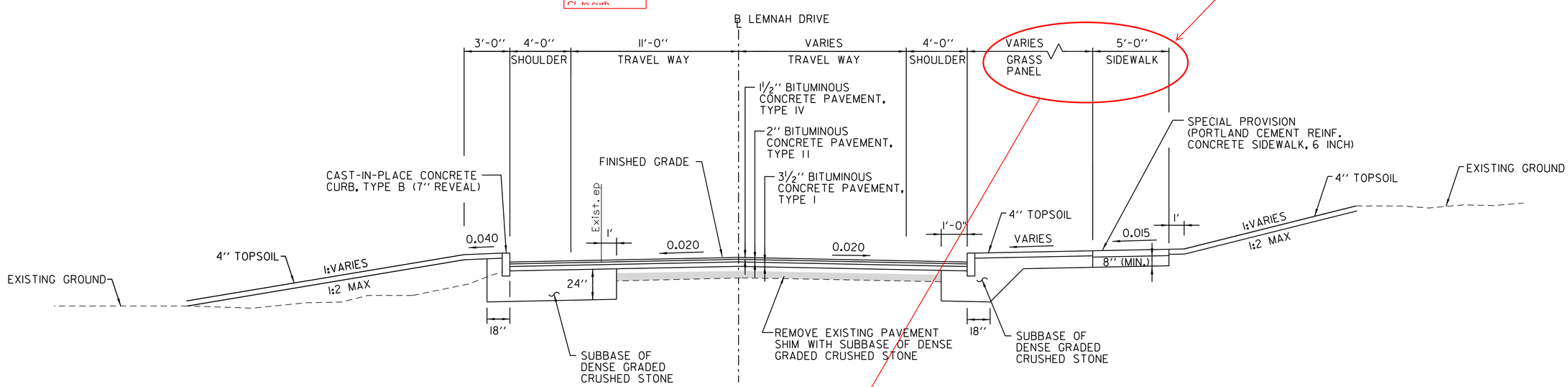

LEMNAH DRIVE

(STA 300+00 - 302+50)
NOT TO SCALE

PROJECT NAME: ST. ALBANS	
PROJECT NUMBER: HPP 8000(17)	
FILE NAME: 57414_TYP.dgn	PLOT DATE: 3/4/2016
PROJECT LEADER: M.A. COLGAN	DRAWN BY: DMP / WAD
DESIGNED BY: D.M. PECK	CHECKED BY: G.L. BAKOS
TYPICAL SECTION (SHEET 3 OF 8)	SHEET 8 OF 230

VHB 57414.00

TYPICAL SECTIONS

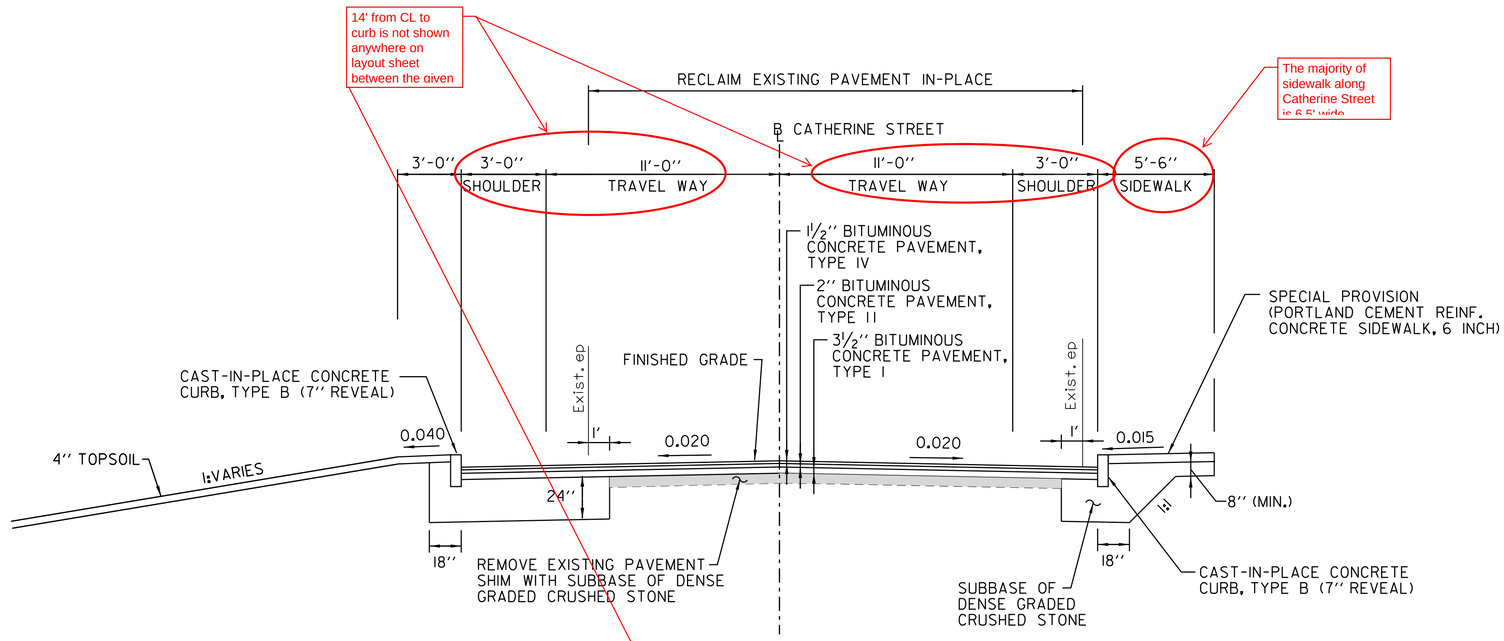

CATHERINE STREET

(STA 408+30 - 413+95)

NOT TO SCALE

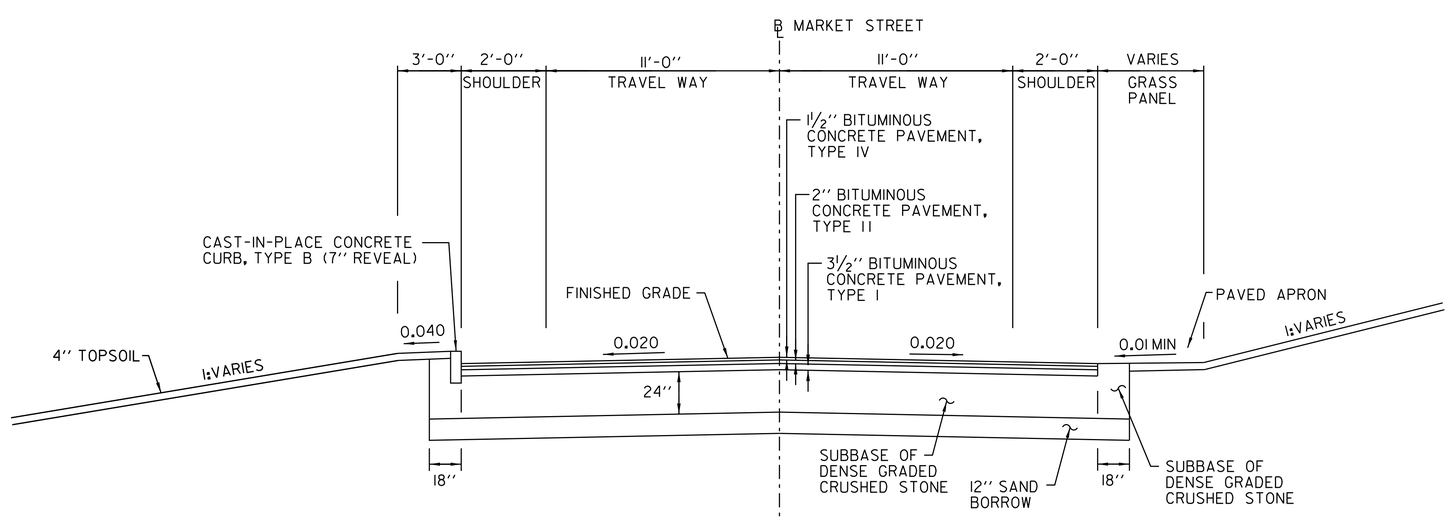

MARKET STREET

NOT TO SCALE

Why not put all Catherine Street Typical Sections on this sheet and all Market Street Typical Sections on next sheet vs. mixing the two?

PROJECT NAME: ST. ALBANS	
PROJECT NUMBER: HPP 8000(17)	
FILE NAME: 57414_TYP.dgn	PLOT DATE: 3/4/2016
PROJECT LEADER: M.A. COLGAN	DRAWN BY: DMP / WAD
DESIGNED BY: D.M. PECK	CHECKED BY: G.L. BAKOS
TYPICAL SECTION (SHEET 4 OF 8)	SHEET 9 OF 230

TYPICAL SECTIONS

MATERIAL TOLERANCE	
PAVEMENT	= 1/4"
SUBBASE	= 1"
SAND BORROW	= 1"

Why are the material tolerances here different than the material tolerances on the Nason Street Connector Typical

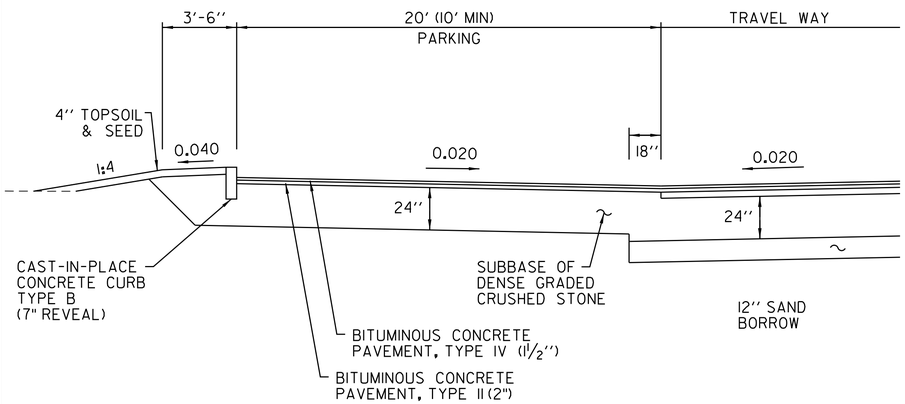

MARKET STREET (DETAIL)

NOT TO SCALE
STA 502+65 to 504+58

Is the ROW line really at the edge of pavement?

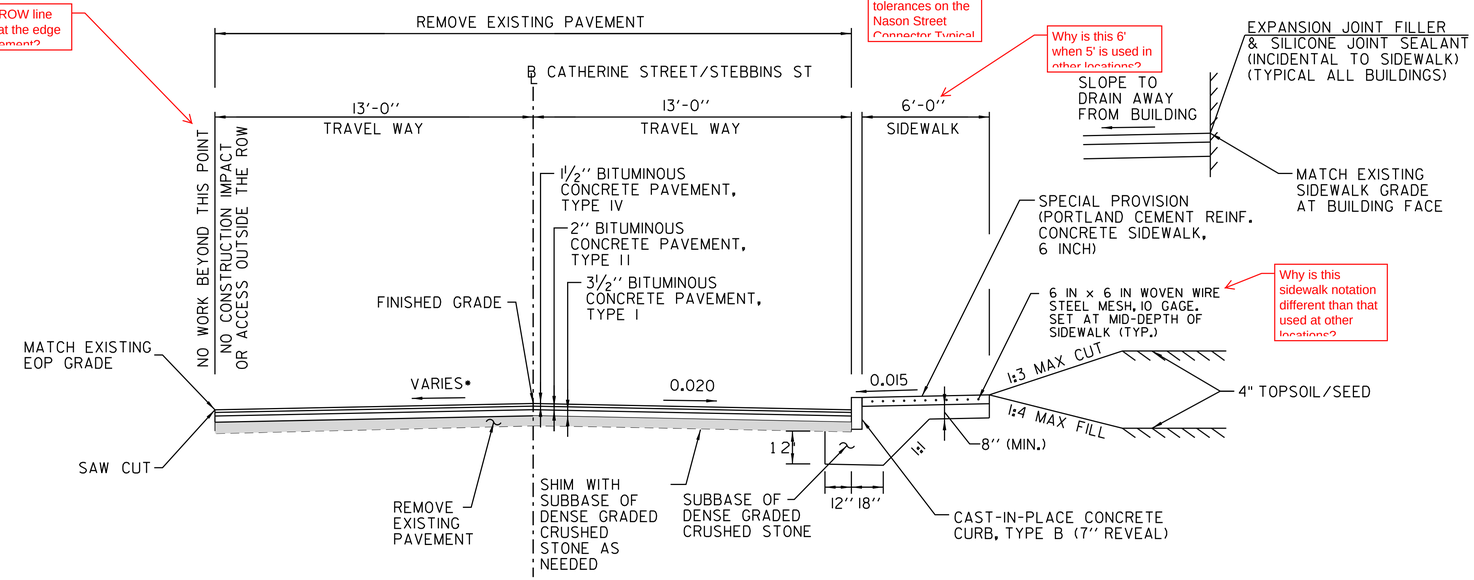

Why is this 6' when 5' is used in other locations?

Why is this sidewalk notation different than that used at other locations?

This stationing is incorrect

CATHERINE STREET

NOT TO SCALE
STA 200+80 to 205+30

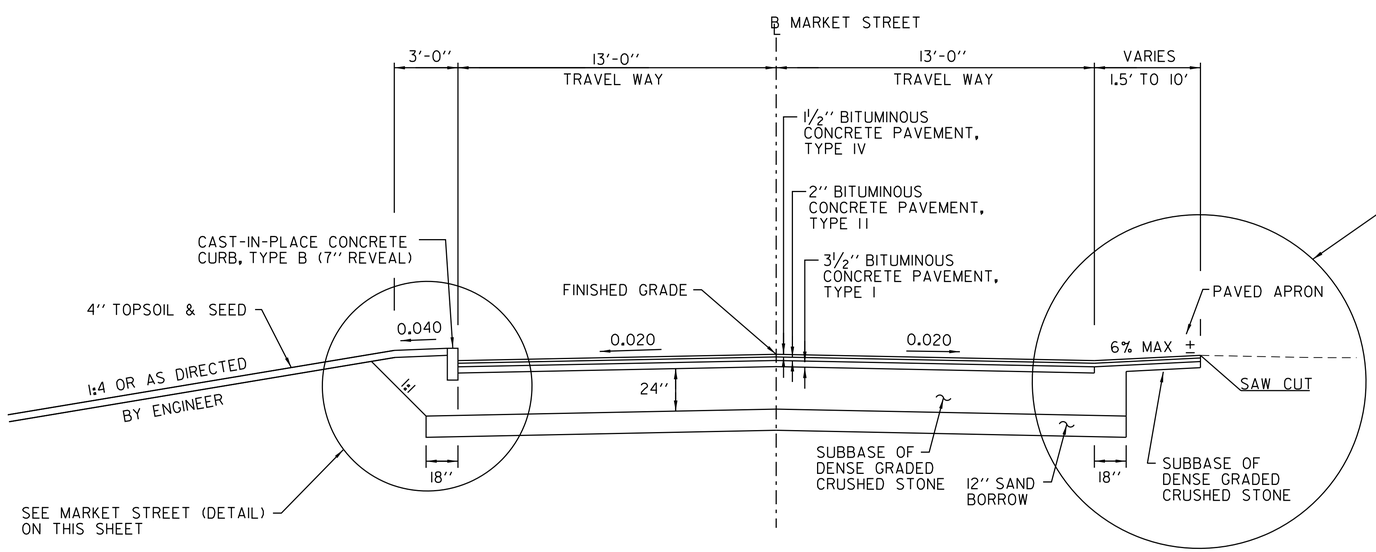

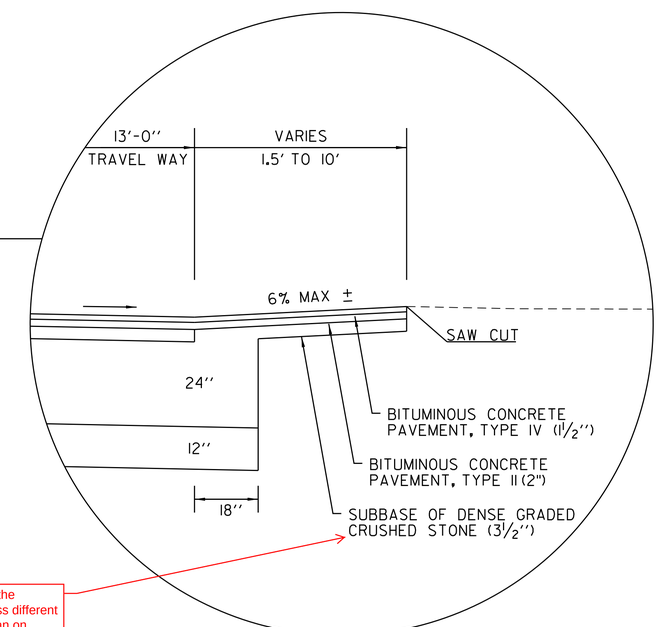

Why is the thickness different here than on other typicals?

MARKET STREET

NOT TO SCALE
STA 501+85 to 507+04

*SLOPE VARIES TO MATCH EXISTING EOP ELEVATION.
CONTRACTOR TO VERIFY EOP GRADES FLOW TO DRAINAGE STRUCTURES
MAX. 4% CROSS SLOPE

PROJECT NAME: ST. ALBANS	
PROJECT NUMBER: HPP 8000(17)	
FILE NAME: 57414_TYP.dgn	PLOT DATE: 3/4/2016
PROJECT LEADER: M.A. COLGAN	DRAWN BY: DMP / WAD
DESIGNED BY: D.M. PECK	CHECKED BY: G.L. BAKOS
TYPICAL SECTION (SHEET 5 OF 8)	SHEET 10 OF 230

vhb

TYPICAL SECTIONS

MATERIAL TOLERANCE	
PAVEMENT	= 1/4"
SUBBASE	= 1"
SAND BORROW	= 1"

The majority of the sidewalk between the given stations is 7.5'

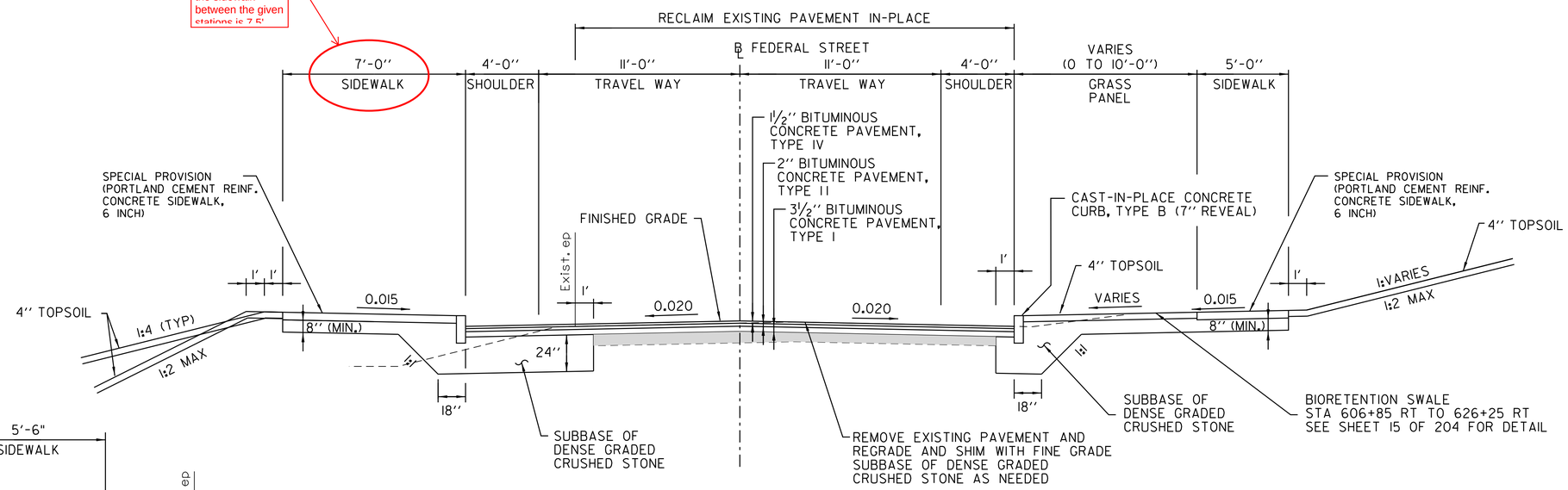

FEDERAL STREET
(STA 608+00 - 632+00)
NOT TO SCALE

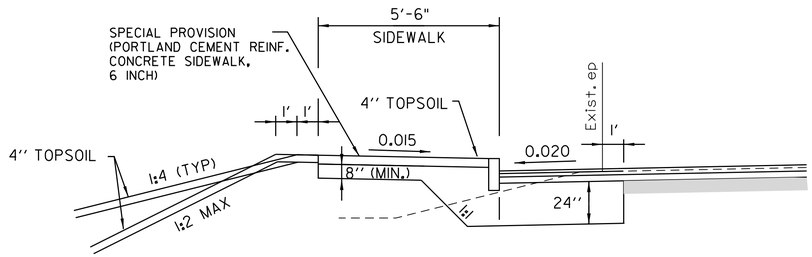

FEDERAL STREET
(STA 622+00 - 631+75)
NOT TO SCALE

Certain "brick" treatments have become long term maintenance headaches for the municipalities. Choose wisely.

Be careful with this as attempting to meet ADA access to buildings and ADA requirements for the public sidewalk can be difficult to achieve in built urban

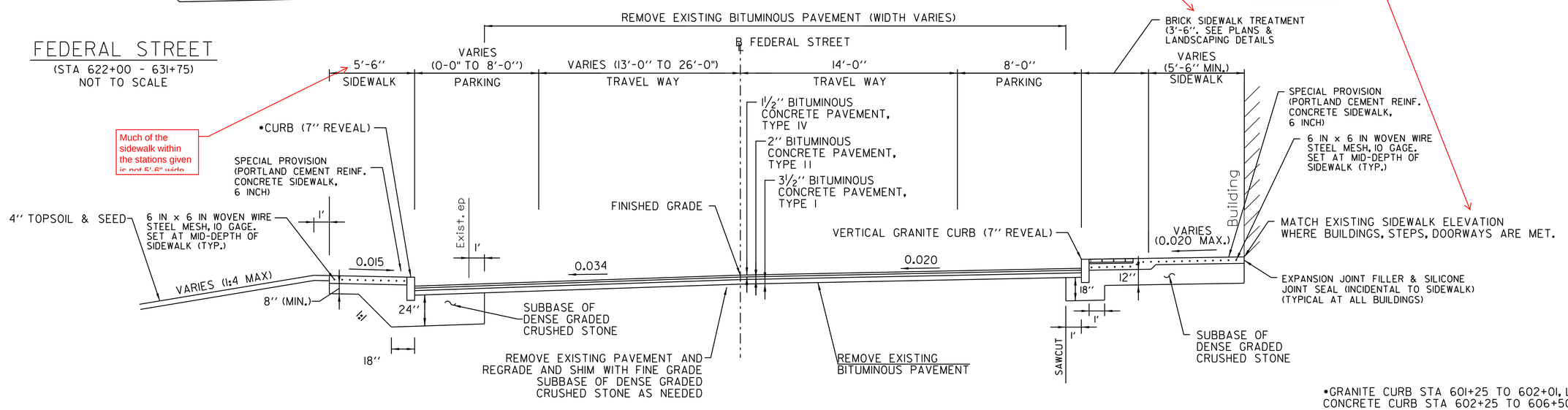

•GRANITE CURB STA 601+25 TO 602+01, LT
CONCRETE CURB STA 602+25 TO 606+50

FEDERAL STREET
(STA 600+00 - 606+75)
NOT TO SCALE

PROJECT NAME: ST. ALBANS	
PROJECT NUMBER: HPP 8000(17)	
FILE NAME: 57414_TYP.dgn	PLOT DATE: 3/4/2016
PROJECT LEADER: M.A. COLGAN	DRAWN BY: DMP / WAD
DESIGNED BY: D.M. PECK	CHECKED BY: G.L. BAKOS
TYPICAL SECTION (SHEET 6 OF 8)	SHEET 11 OF 230

vhb

VHB 57414.00

TYPICAL SECTIONS

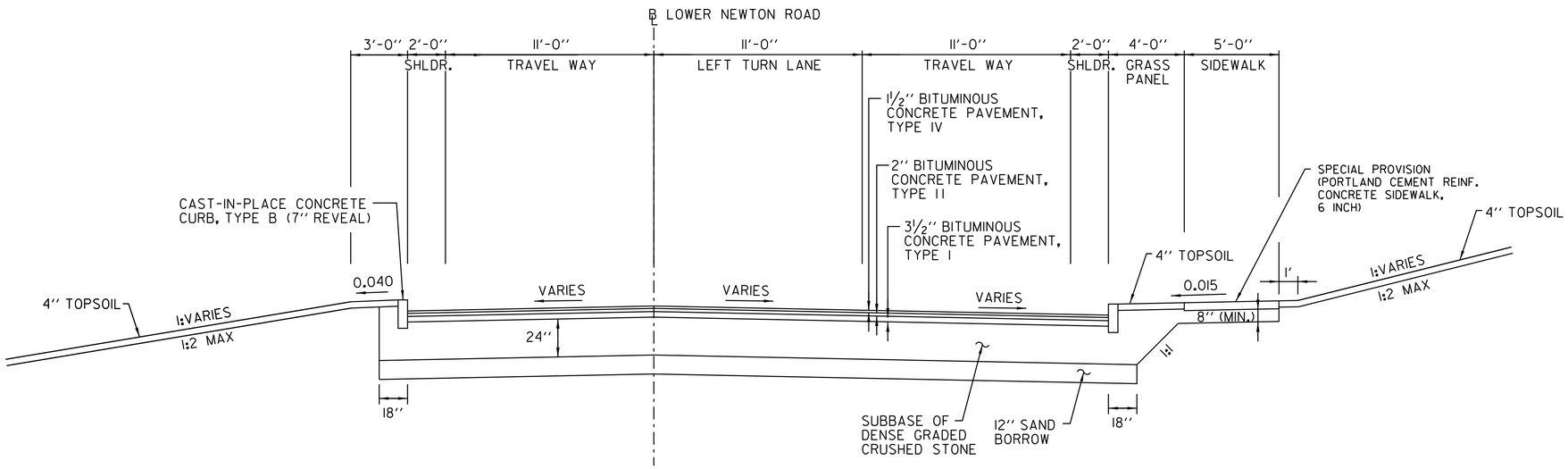

LOWER NEWTON ROAD FULL DEPTH RECONSTRUCTION

(STA 806+50 - 809+34)
NOT TO SCALE

Stationing is not accurate

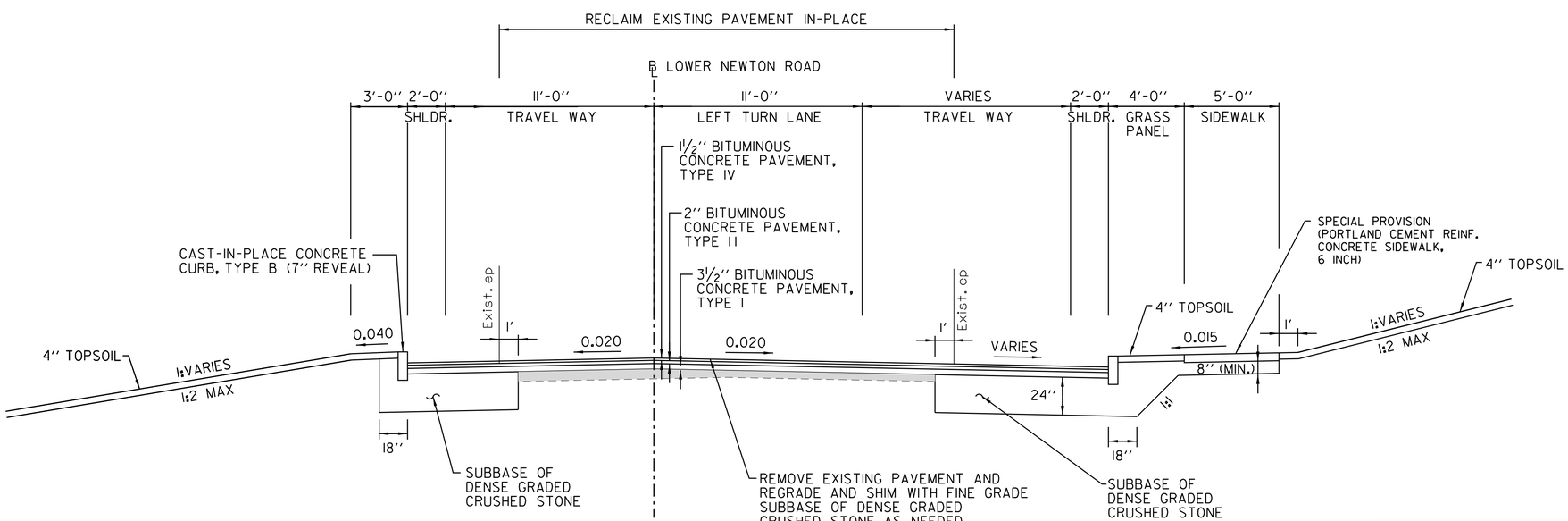

LOWER NEWTON ROAD REHABILIATION & WIDENING

(STA 801+50 - 506+50)
NOT TO SCALE

Incorrect

PROJECT NAME: ST. ALBANS	
PROJECT NUMBER: HPP 8000(17)	
FILE NAME: 57414_TYP.dgn	PLOT DATE: 3/4/2016
PROJECT LEADER: M.A. COLGAN	DRAWN BY: DMP / WAD
DESIGNED BY: D.M. PECK	CHECKED BY: G.L. BAKOS
TYPICAL SECTION (SHEET 7 OF 8)	SHEET 12 OF 230

VHB 57414.00

TYPICAL SECTIONS

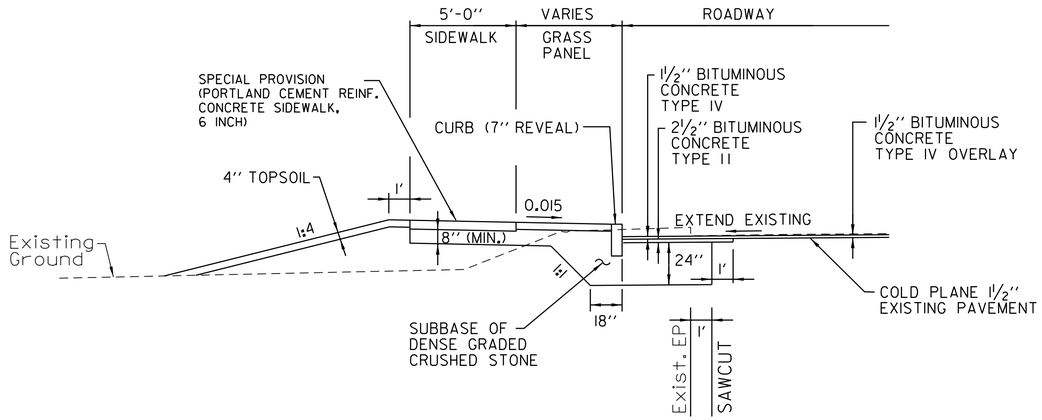

ROAD WIDENING - SIDEWALK

NASON STREET
LOWER WELDEN STREET
LAKE STREET

NOT TO SCALE

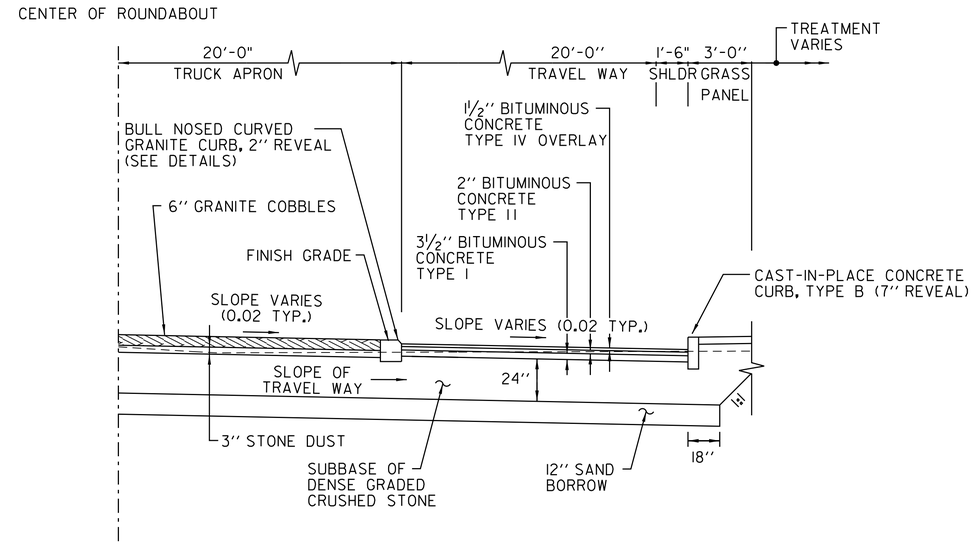

ROUNDABOUT

NOT TO SCALE

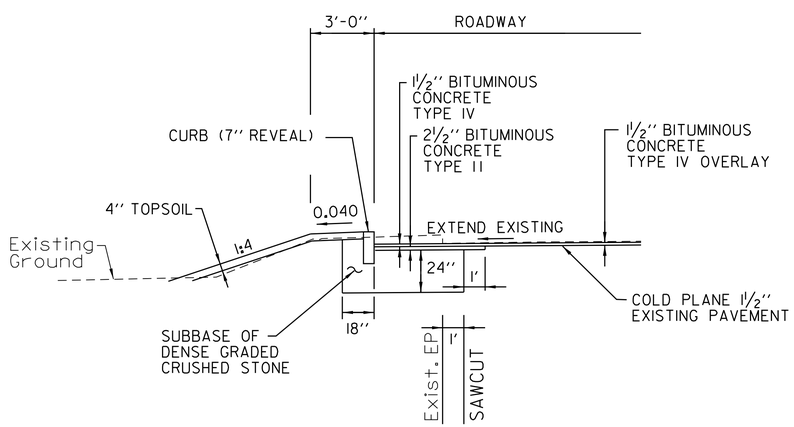

ROAD WIDENING - NO SIDEWALK

SOUTH MAIN STREET
NORTH MAIN STREET
NASON STREET
LOWER WELDEN STREET
LAKE STREET

NOT TO SCALE

PROJECT NAME: ST. ALBANS	
PROJECT NUMBER: HPP 8000(17)	
FILE NAME: 57414_TYP.dgn	PLOT DATE: 3/4/2016
PROJECT LEADER: M.A. COLGAN	DRAWN BY: DMP / WAD
DESIGNED BY: D.M. PECK	CHECKED BY: G.L. BAKOS
TYPICAL SECTION (SHEET 8 OF 8)	SHEET 13 OF 230

VHB 57414.00

CONSTRUCTION DETAILS

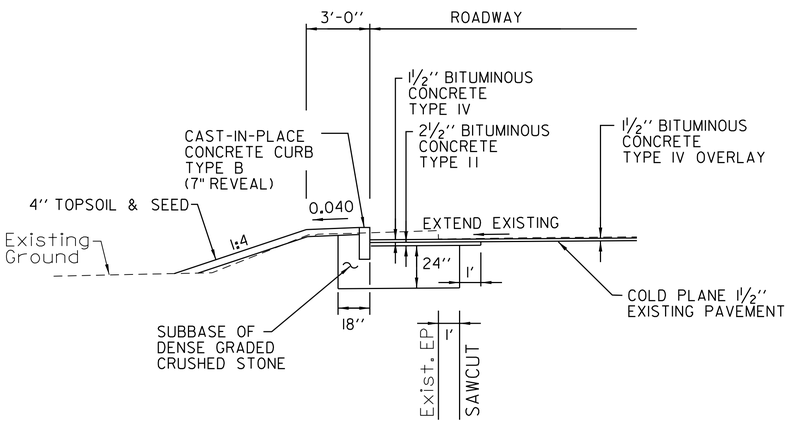

ROAD WIDENING - NO SIDEWALK

NOT TO SCALE

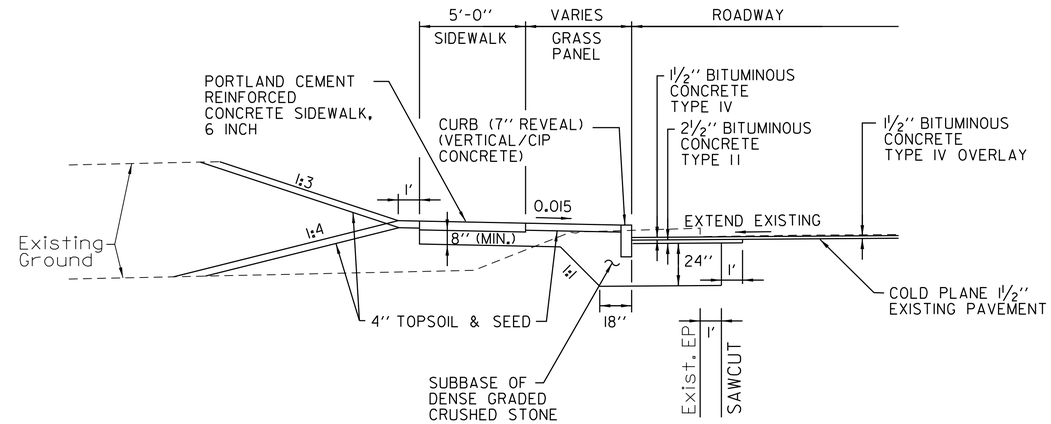

ROAD WIDENING - W/SIDEWALK

NOT TO SCALE

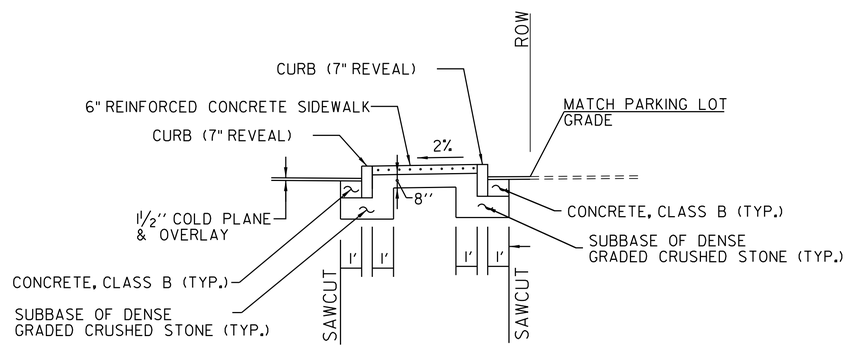

SIDEWALK

NOT TO SCALE

STA 38+84.8, RT TO 39+52, RT

NOT TO SCALE

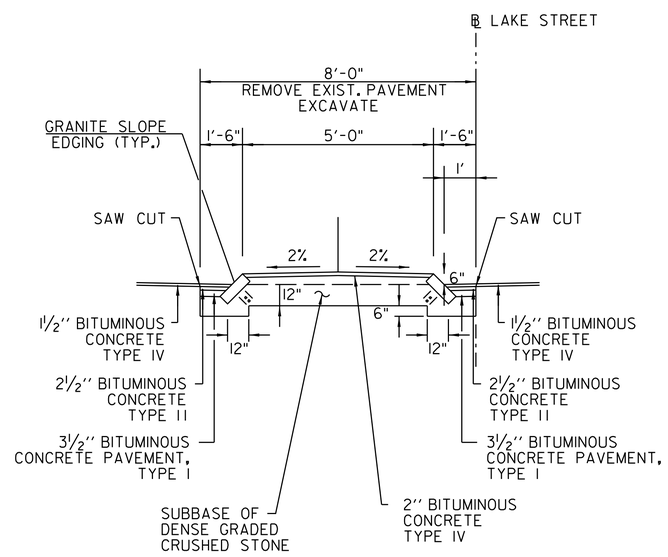

MEDIAN ISLAND

NOT TO SCALE

LAKE STREET (STA 38+29.5, RT TO 38+59.8, RT)

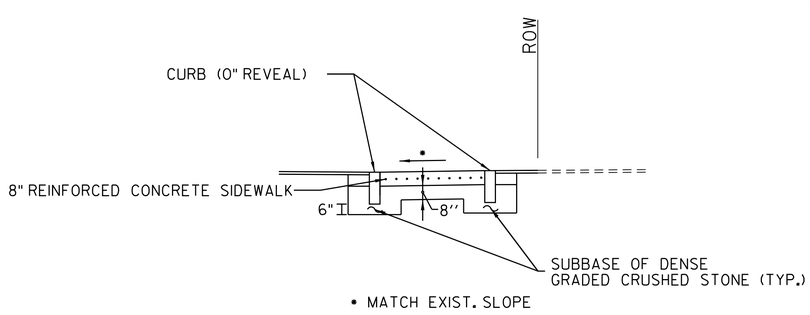

FLUSH CONCRETE SIDEWALK

NOT TO SCALE

STA 38+68.2, RT TO 38+84.8, RT

PROJECT NAME: ST. ALBANS	
PROJECT NUMBER: HPP 8000(17)	
FILE NAME: 57414_BDR_DET.dgn	PLOT DATE: 3/4/2016
PROJECT LEADER: M.A. COLGAN	DRAWN BY: G.A. GOMEZ
DESIGNED BY: D.M. PECK	CHECKED BY: M.J. SERVETAS
CONSTRUCTION DETAILS (SHEET 1 OF 3)	SHEET 14 OF 230

VHB 57414.00

CONSTRUCTION DETAILS

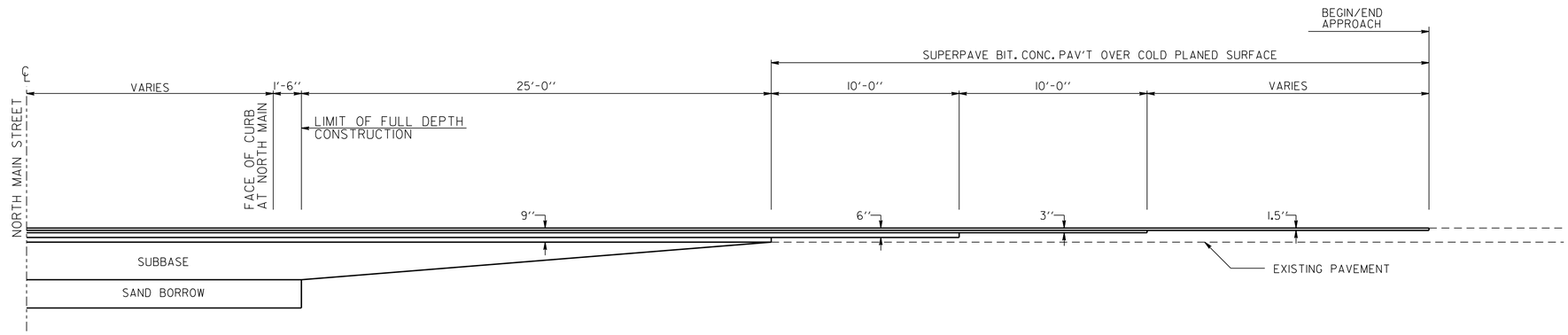

SIDE STREET TRANSITION
N.T.S.

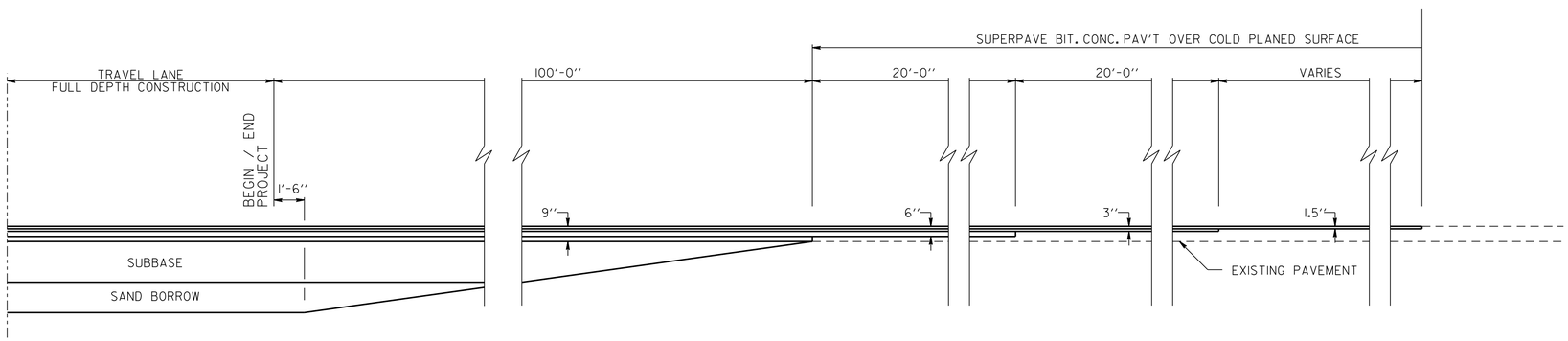

MAIN LINE TRANSITION
N.T.S.

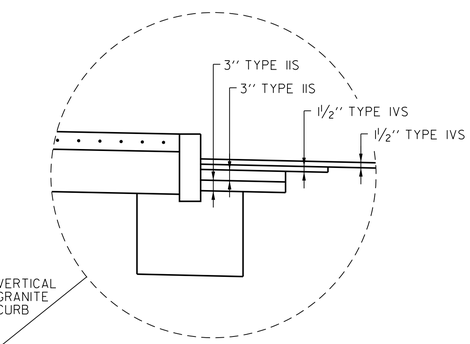

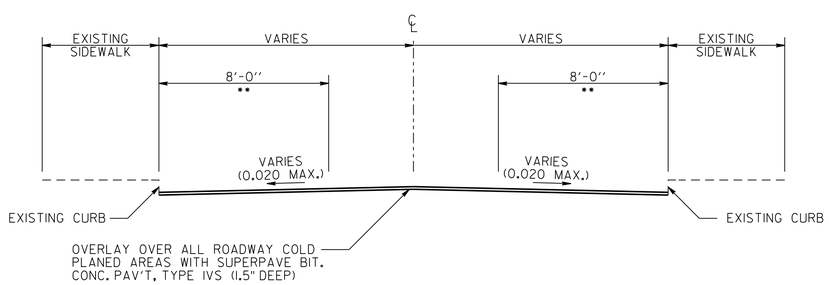

** NOTE:

THE COLD PLANING DEPTH MAY EXCEED 2" AT 8'-0" FROM THE GUTTER LINE IN ORDER TO MAXIMIZE REVEAL AT THE FACE OF EXISTING CURB (7" MAX. REVEAL).

COLD PLANING / RESURFACING
SEE PLANS FOR LOCATIONS
N.T.S.

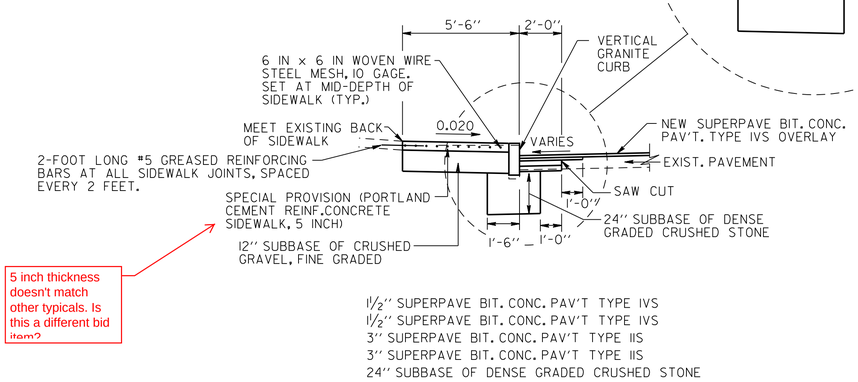

SIDEWALK CONSTRUCTION AT OVERLAY AREAS
N.T.S.

PROJECT NAME: ST. ALBANS	
PROJECT NUMBER: HPP 8000(17)	
FILE NAME: 57414_BDR_DET.dgn	PLOT DATE: 3/4/2016
PROJECT LEADER: M.A. COLGAN	DRAWN BY: G.A. GOMEZ
DESIGNED BY: D.M. PECK	CHECKED BY: M.J. SERVETAS
CONSTRUCTION DETAILS (SHEET 2 OF 3)	SHEET 15 OF 230

CONSTRUCTION DETAILS

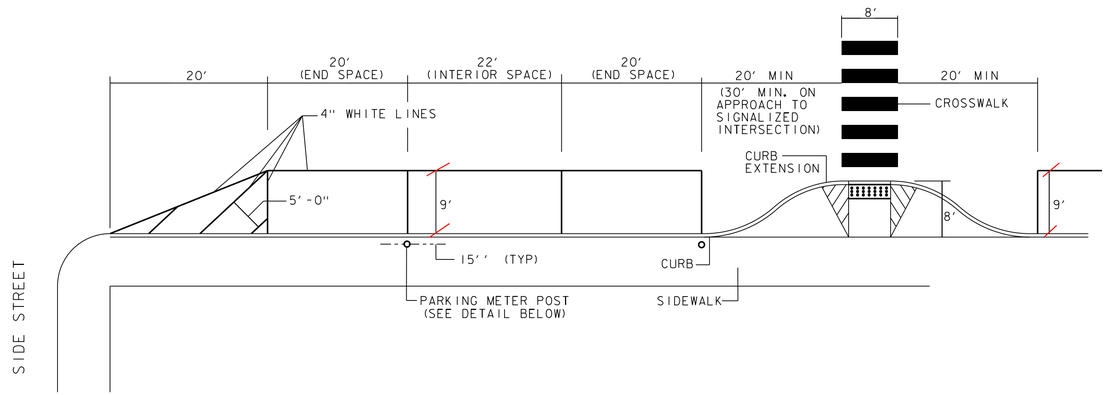

TYPICAL PARKING SPACE AND CROSSWALK LAYOUT

N.T.S

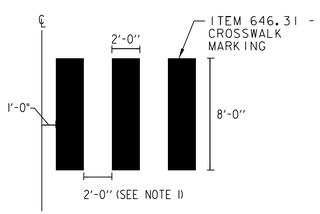

BLOCK STYLE CROSSWALK MARKING

(90 DEGRESS)

N.T.S.

1. ADJUST SPACING (12" TO 24") TO AVOID WHEEL PATHS
2. BLOCKS SHOULD BE INSTALLED PARALLEL TO TRAFFIC FLOW. FOR SKEWED CROSSINGS, OFFSET BLOCKS LATERALLY AS NEEDED.

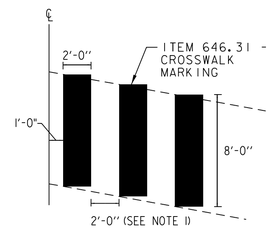

BLOCK STYLE CROSSWALK MARKING

(ON SKEW)

N.T.S.

Concrete or flush granite? I recommend concrete

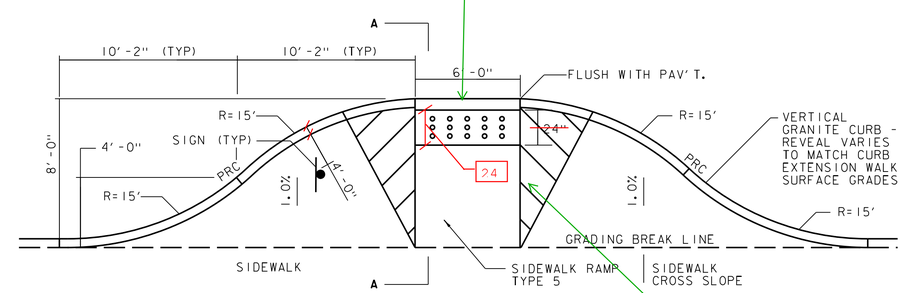

NOTE: REFER TO VT STANDARD SHEETS C-3A & C-3B FOR ADDITIONAL SIDEWALK RAMP CONSTRUCTION DETAILS.

TYPICAL CURB EXTENSION

N.T.S.

From an accessibility standpoint, it is better if the edge of the ramp is vertical curb i.e. no flares. I can send you a photo

5 inch or 6 inch?

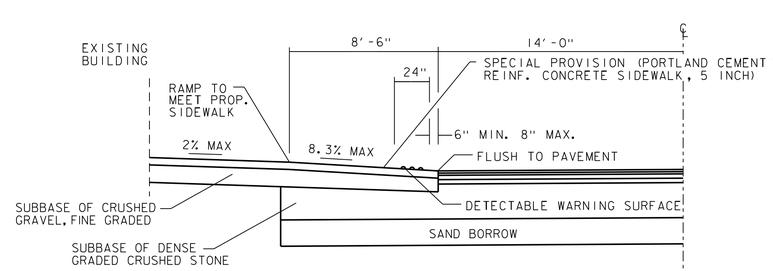

NOTE:

SEE SHEETS 3-5 FOR SIDEWALK AND PAVEMENT STRUCTURES.

Where?

CURB EXTENSION SECTION A-A

N.T.S.

PROJECT NAME: ST. ALBANS	
PROJECT NUMBER: HPP 8000(17)	
FILE NAME: 57414_BDR_DET.dgn	PLOT DATE: 3/4/2016
PROJECT LEADER: M.A. COLGAN	DRAWN BY: G.A. GOMEZ
DESIGNED BY: D.M. PECK	CHECKED BY: M.J. SERVETAS
CONSTRUCTION DETAILS (SHEET 3 OF 3)	SHEET 16 OF 230

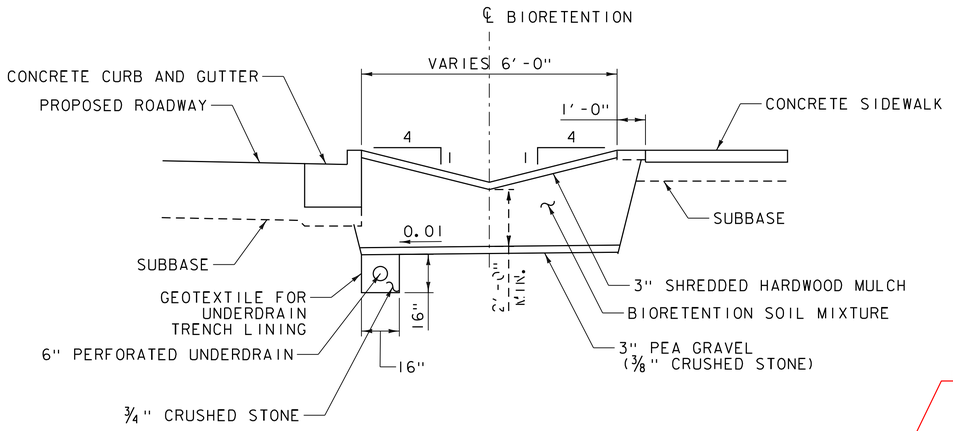

1 1/2" CRUSHED STONE GRADATION TABLE

SIEVE SIZE	% PASSING
2"	100
1 1/2"	95-100
1 1/4"	45-80
1"	35-70
3/4"	0-25
1/2"	0-5
3/8"	0

Is this something different than what is in our spec? If not, why repeat it here? Just introduces a place for error

3/8" CRUSHED STONE GRADATION TABLE

SIEVE SIZE	% PASSING
1/2"	100
3/8"	85-100
No. 4	15-45
No. 8	0-5
No. 40	0

type?

NOTES:

1. PLANTED SWALE WISTH AND PLANTINGS SHOWN ON DRAINAGE LAYOUT PLAN (SEE SHEET)
2. OTHER....

BIORETENTION TYPICAL SECTION

SCALE: 3/8" = 1'-0"

I would consider pulling these dimensions up and over the detail instead of directly through it

Is this an acronym everyone knows? I don't

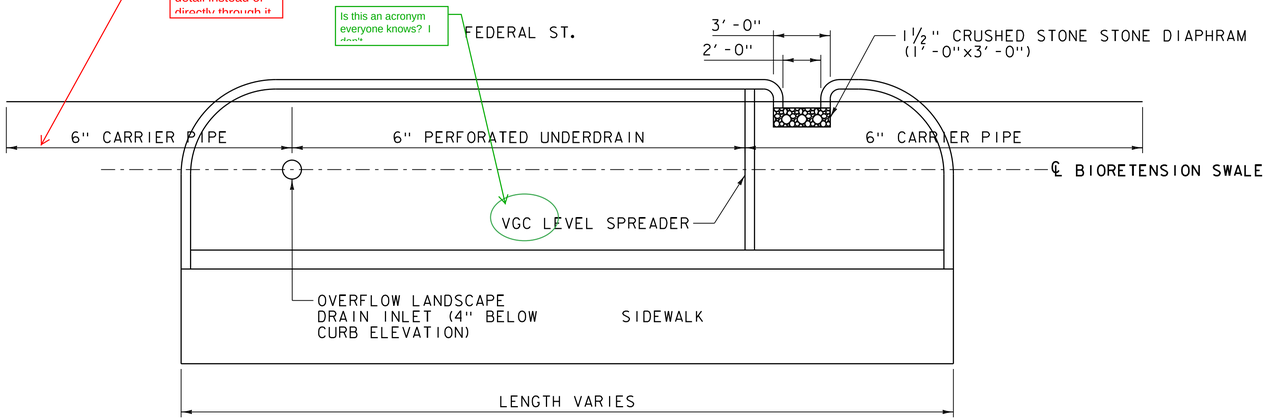

BIORETENTION PLAN VIEW

SCALE: 1/4" = 1'-0"

PROJECT NAME: ST. ALBANS	
PROJECT NUMBER: HPP 8000(17)	
FILE NAME: 57414_BDR_D-DET.dgn	PLOT DATE: 3/4/2016
PROJECT LEADER: M. A. COLGAN	DRAWN BY: VHB
DESIGNED BY: D. M. PECK	CHECKED BY: ------
DRAINAGE DETAILS (1 OF 3)	SHEET 17 OF 230

Conflicting Information: General Notes Sheet, Utility Notes #7 (Booted Connections)

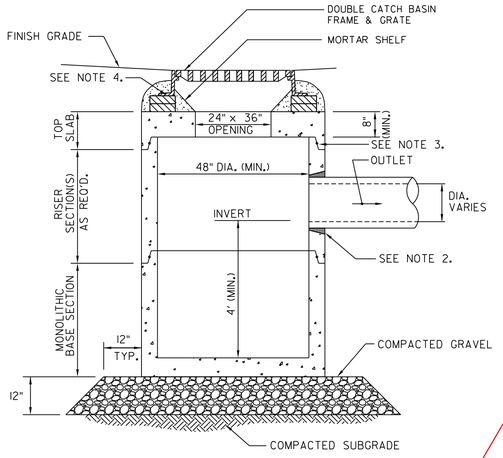

Notes:

1. ALL SECTIONS SHALL BE DESIGNED FOR HS-20 LOADING.
2. PROVIDE OPENINGS FOR PIPES WITH 2" MAX. CLEARANCE TO OUTSIDE OF PIPE. MORTAR ALL PIPE CONNECTIONS.
3. JOINT SEALANT BETWEEN PRECAST SECTIONS SHALL BE BUTYL RUBBER.
4. DOUBLE CATCH BASIN FRAME AND GRATE SHALL BE SET IN FULL MORTAR BED. ADJUST TO GRADE WITH CLAY BRICK AND MORTAR (2 BRICKS TYPICALLY, 5 BRICK COURSES MAXIMUM)

DOUBLE GRATE CATCH BASIN

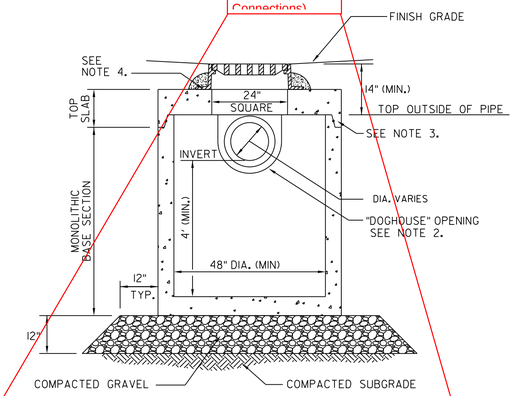

Notes:

1. ALL SECTIONS SHALL BE DESIGNED FOR HS-20 LOADING.
2. PROVIDE DOGHOUSE OPENING FOR PIPES WITH 2" MAX. CLEARANCE TO OUTSIDE OF PIPE. TOP SLAB SHALL NOT REST DIRECTLY ON PIPE. GROUT ALL PIPE CONNECTIONS (NON-SHRINK GROUT).
3. JOINT SEALANT BETWEEN PRECAST SECTIONS SHALL BE PREFORMED BUTYL RUBBER.
4. CATCH BASIN FRAME AND GRATE (4"DEPTH) SHALL BE SET IN FULL MORTAR BED.
5. ADJUST TO FINISH GRADE WITH CLAY BRICK AND MORTAR AS REQUIRED.

CATCH BASIN SHALLOW COVER

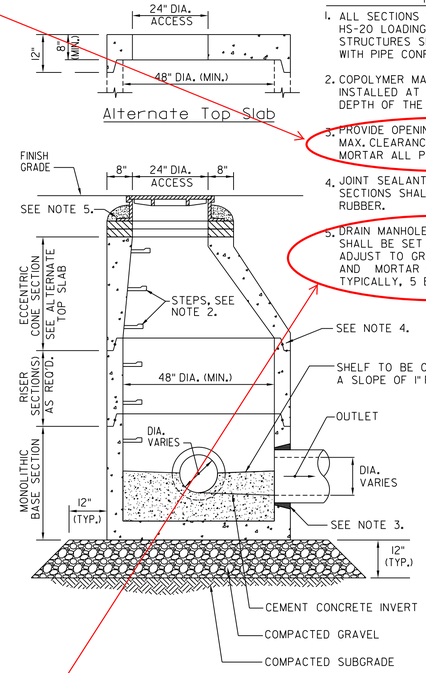

Notes:

1. ALL SECTIONS SHALL BE DESIGNED FOR HS-20 LOADING. DIAMETER OF STRUCTURES SHALL BE COORDINATED WITH PIPE CONFIGURATIONS.
2. COPOLYMER MANHOLE STEPS SHALL BE INSTALLED AT 12" O.C. FOR THE FULL DEPTH OF THE STRUCTURE.
3. PROVIDE OPENINGS FOR PIPES WITH 2" MAX. CLEARANCE TO OUTSIDE OF PIPE. MORTAR ALL PIPE CONNECTIONS.
4. JOINT SEALANT BETWEEN PRECAST SECTIONS SHALL BE PREFORMED BUTYL RUBBER.
5. DRAIN MANHOLE FRAME AND COVER SHALL BE SET IN FULL MORTAR BED. ADJUST TO GRADE WITH CLAY BRICK AND MORTAR (2 BRICK COURSES TYPICALLY, 5 BRICK COURSES MAXIMUM)

DRAIN MANHOLE

FES NO.	X	Y	Z	STONE DIA. (D 50)

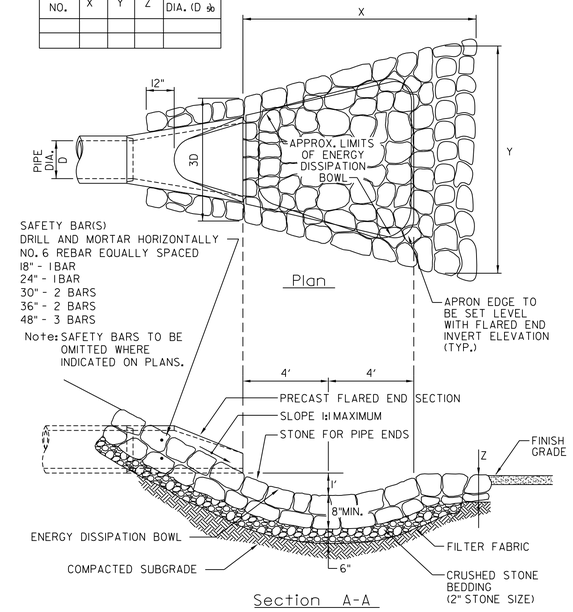

FLARED END SECTION WITH STONE PROTECTION

Conflicting Information: See General Notes Sheet, Utility Notes #6

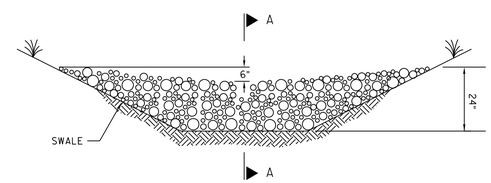

ELEVATION

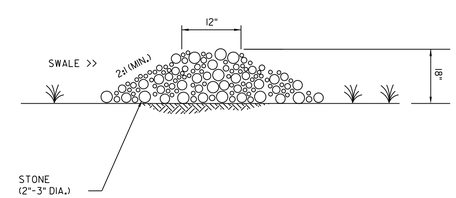

SECTION A-A

NOTES:

1. STONE CHECKDAM TO BE A PERMANENT STRUCTURE AFTER CONSTRUCTION.

STONE CHECKDAM

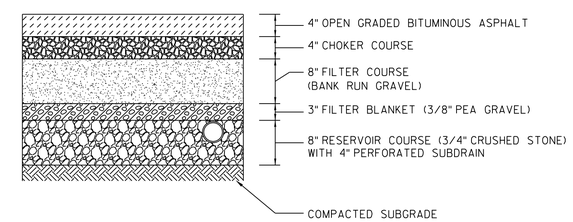

TYPICAL PERMEABLE PAVEMENT SECTION

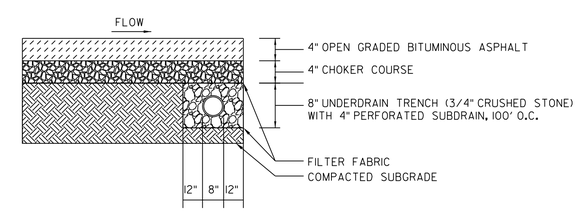

REDUCED PERMEABLE PAVEMENT SECTION WITH UNDERDRAIN TRENCH

PROJECT NAME: ST. ALBANS	
PROJECT NUMBER: HPP 8000(17)	
FILE NAME: 57414_BDR_D-DET.dgn	PLOT DATE: 3/4/2016
PROJECT LEADER: M. A. COLGAN	DRAWN BY: VHB
DESIGNED BY: D. M. PECK	CHECKED BY: ------
DRAINAGE DETAILS (2 OF 3)	SHEET 18 OF 230

DETENTION BASIN NO.	DIAMETER ORIFICE A	INVERT ORIFICE A	DIAMETER ORIFICE B	INVERT ORIFICE B	DIAMETER OUTLET PIPE	INVERT OUTLET PIPE	OVERFLOW WEIR ELEV.	OVERFLOW RIPRAP SWALE DIMENSIONS	OVERFLOW SWALE ELEV.	TOP OF BERM
								W= D=		

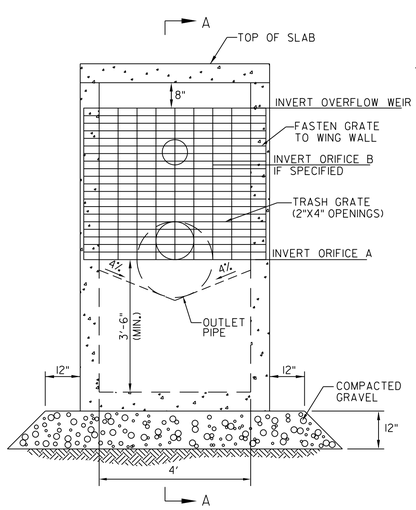

Front View

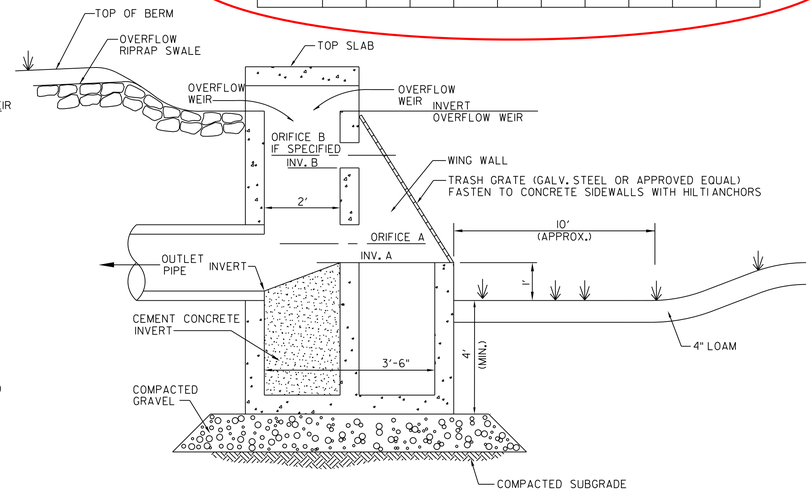

Side View A-A

MULTISTAGE OUTLET CONTROL STRUCTURE

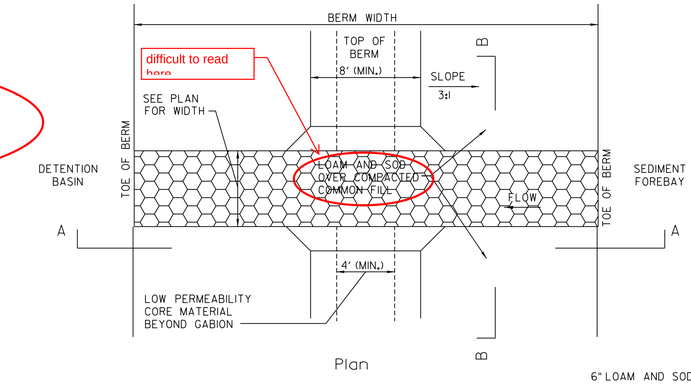

Plan

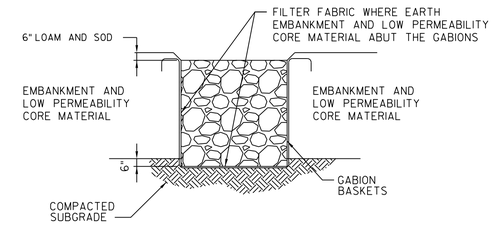

Section B-B

Notes:

1. CORE MATERIAL SHALL HAVE A PERMEABILITY OF LESS THAN IX10^-5 INCHES PER HOUR.
2. THE BERM SECTION MAY BE BASED ON THE RESULTS OF FURTHER GEOTECHNICAL INVESTIGATIONS.
3. COMBINE GABIONS TO MEET WIDTH AND LENGTH DIMENSIONS AND ELEVATIONS SHOWN ON PLAN. TYPICAL GABION IS 3' WIDE x 3' HIGH x 3' LONG.
4. PROVIDE FILTER FABRIC TO PREVENT EARTH EMBANKMENT FROM SILTING INTO GABIONS.
5. SEE SPECIFICATIONS FOR EMBANKMENT MATERIALS.
6. GABION ROCK TO BE PER EARTHWORK SPECIFICATIONS; STONE FOR PIPE ENDS WITH SIZE D_{50}=50.

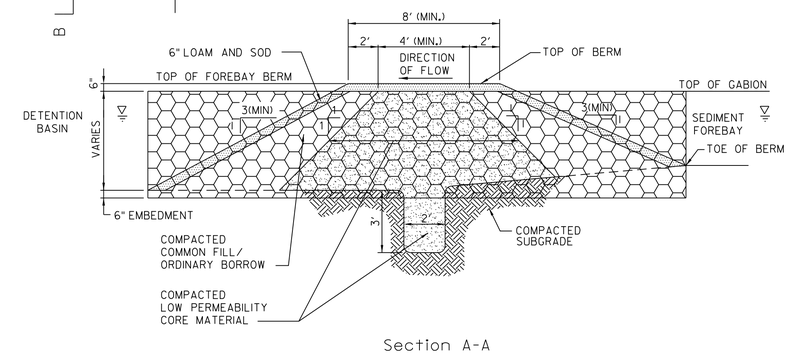

Section A-A

SEDIMENT FOREBAY BERM

SWALE DESIGNATION	W	D

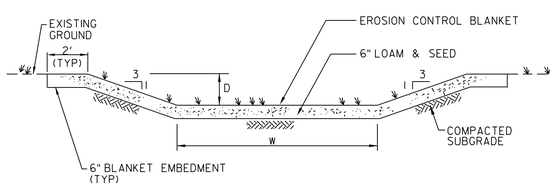

GRASSED SWALE

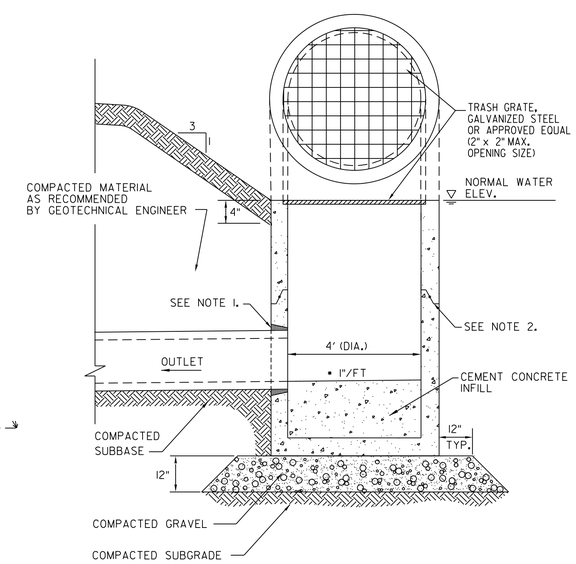

Notes:

1. PROVIDE OPENINGS FOR PIPES WITH 2" MAX. CLEARANCE TO OUTSIDE OF PIPE. MORTAR ALL PIPE CONNECTIONS.
2. JOINT SEALANT BETWEEN PRECAST SECTIONS SHALL BE PREFORMED BUTYL RUBBER.

Conflicting Information: General Notes Sheet, Utility Note #7

POND OUTLET CONTROL DETAIL

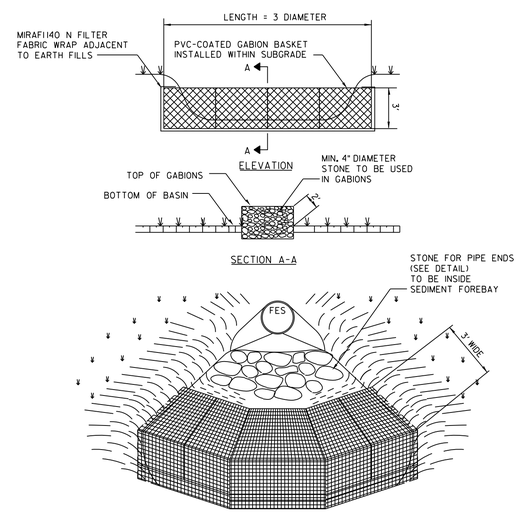

SEE GRADING AND DRAINAGE PLANS FOR VOLUME AND DEPTH INFORMATION

SEDIMENT FOREBAY WITH GABION BAFFLES

vhb

PROJECT NAME: ST. ALBANS	
PROJECT NUMBER: HPP 8000(17)	
FILE NAME: 57414_BDR_D-DET.dgn	PLOT DATE: 3/4/2016
PROJECT LEADER: M. A. COLGAN	DRAWN BY: VHB
DESIGNED BY: D. M. PECK	CHECKED BY: ------
DRAINAGE DETAILS (3 OF 3)	SHEET 19 OF 230

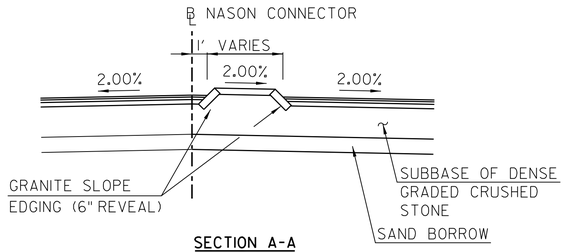

SECTION A-A
N.T.S.

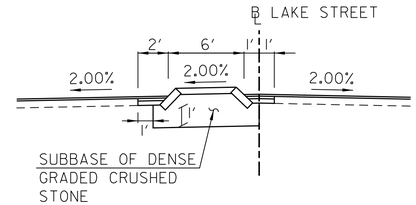

SECTION B-B
N.T.S.

CURB DETAIL "A"
N.T.S.

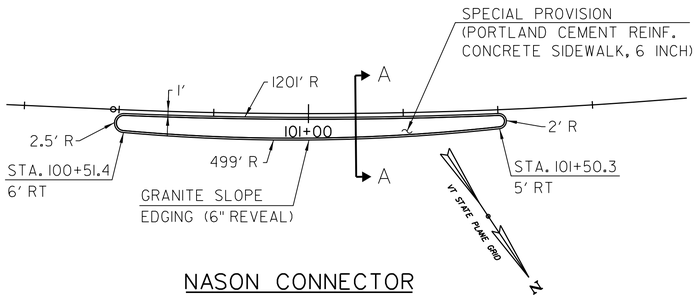

NASON CONNECTOR
N.T.S.

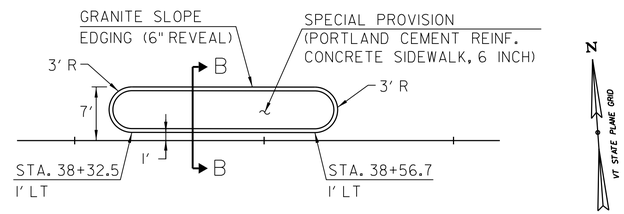

LAKE STREET (VT 36)
N.T.S.

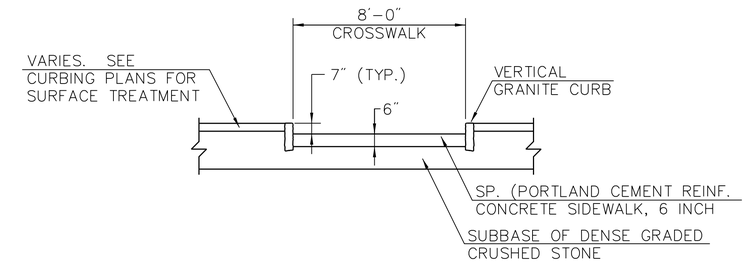

TYPICAL CROSSWALK LONGITUDINAL
SECTION D-D
N.T.S.

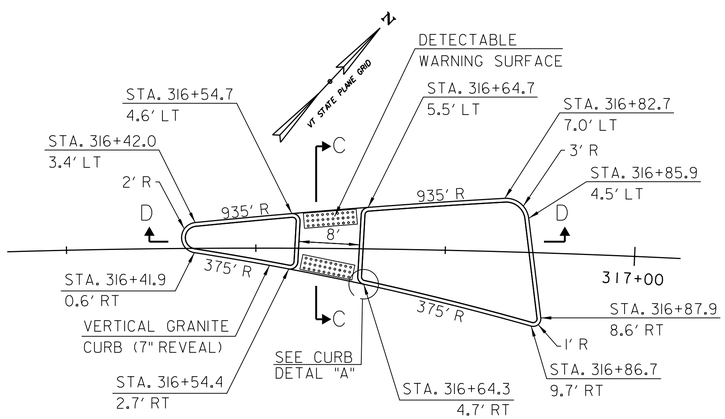

LEMNAH DRIVE
N.T.S.

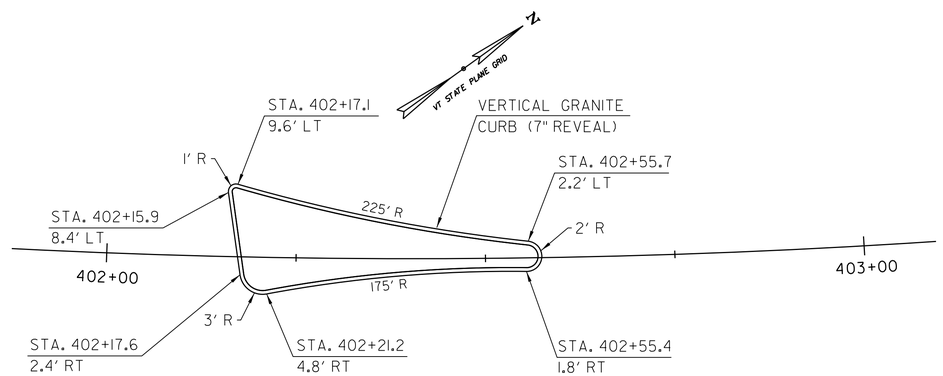

ALLEN STREET
N.T.S.

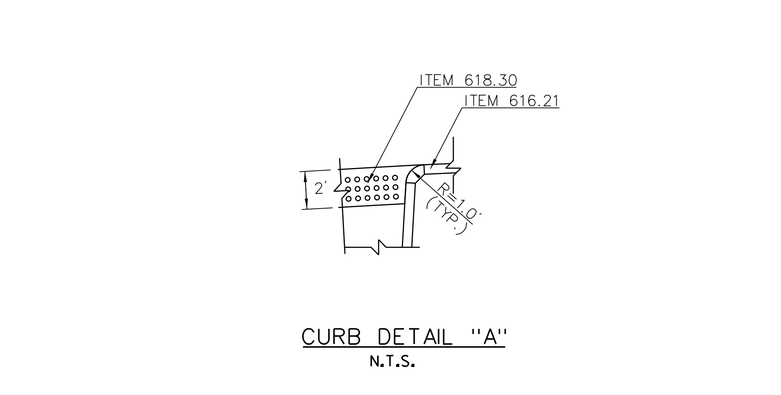

TYPICAL CROSSWALK LONGITUDINAL
SECTION C-C
N.T.S.

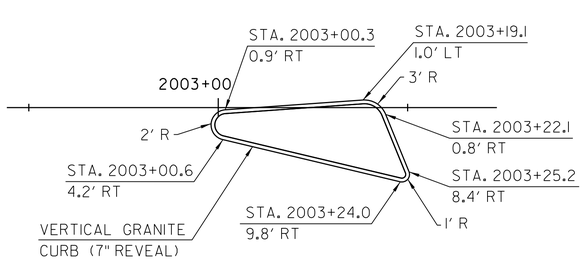

LOWER WELDEN STREET (WEST)
N.T.S.

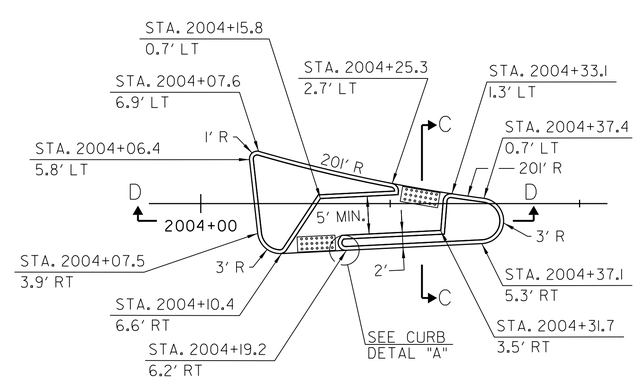

LOWER WELDEN STREET (EAST)
N.T.S.

'Island Detail Sheet',
as shown on index of
sheets

PROJECT NAME: ST. ALBANS	
PROJECT NUMBER: HPP 8000(17)	
FILE NAME: 57414_RM_DET.dgn	PLOT DATE: 3/4/2016
PROJECT LEADER: J. D. SALADINO	DRAWN BY: DMP / WAD
DESIGNED BY: D.M. PECK	CHECKED BY: G.L. BAKOS
DRAINAGE DETAIL SHEET (3 OF ??)	SHEET 20 OF 230

VHB 57414.00

NASON STREET CONNECTOR

POINT TYPE	STATION	NORTHING	EASTING
POB	100+00.00	839528.0153	1487601.8470
PC	100+48.45	839556.5994	1487562.7234
PI	101+70.84	839628.7966	1487463.9056
PT	102+92.37	839679.5590	1487352.5478
PC	107+20.50	839857.1392	1486962.9888
PI	108+27.17	839901.3852	1486865.9260
PT	108+84.03	839995.3921	1486916.3403
POE	110+56.00	840146.9421	1486997.6139

NASON STREET

POINT TYPE	STATION	NORTHING	EASTING
POB	201+40.00	840252.7268	1486778.0503
POE	205+00.00	840096.4706	1487102.3711

LEMNAH DRIVE

POINT TYPE	STATION	NORTHING	EASTING
POB	300+00.00	840146.9345	1486997.6297
PC	308+63.18	840916.0772	1487389.4163
PI	309+37.33	840982.1474	1487423.0712
PT	310+11.35	841051.2147	1487450.0460
PC	310+75.30	841110.7835	1487473.3111
PI	311+53.68	841183.7847	1487501.8223
PT	312+31.82	841252.4308	1487539.6348
PC	312+89.82	841303.2315	1487567.6175
PI	315+11.94	841497.7856	1487674.7844
PT/POE	317+28.61	841638.2137	1487846.8773

ALLEN STREET TO MARKET STREET

POINT TYPE	STATION	NORTHING	EASTING
POB/PC	401+75.05	841638.2137	1487846.8773
PI	402+91.58	841728.3754	1487920.7057
PT	404+07.16	841832.5747	1487972.8808
PC	407+41.97	842131.9555	1488122.7880
PI	408+24.81	842206.0238	1488159.8758
PRC	409+05.22	842258.6231	1488223.8674
PI	410+06.29	842322.8020	1488301.9466
PT	410+98.93	842422.2688	1488319.8811
POE	415+62.88	842878.8576	1488402.2071

STEBBINS STREET TO MARKET STREET

POINT TYPE	STATION	NORTHING	EASTING
POB	500+00.00	842307.1769	1488402.8695
PC	501+17.33	842327.5573	1488287.3250
PI	502+34.19	842347.8571	1488172.2373
PT	503+02.65	842463.4419	1488189.4834
PC	504+57.33	842616.4364	1488212.3114
PI	505+40.24	842698.4359	1488224.5463
PT	506+23.05	842779.1414	1488243.5259
POE	507+35.28	842888.3894	1488269.2180

FEDERAL STREET

POINT TYPE	STATION	NORTHING	EASTING
POB	600+00.00	842878.8576	1488402.2071
PC	600+48.35	842922.4130	1488423.2082
PI	600+94.75	842964.2007	1488443.3569
PT	601+40.41	843010.1226	1488449.9424
PC	602+99.43	843167.5337	1488472.5160
PI	603+42.28	843209.9500	1488478.5988
PT	603+85.13	843252.4643	1488483.9537
PC	606+29.60	843495.0246	1488514.5053
PI	606+87.41	843552.3757	1488521.7289
PT	607+45.21	843609.8784	1488527.6248
PC	608+46.30	843710.4435	1488537.9358
PI	609+26.81	843790.5332	1488546.1475
PT	610+07.32	843870.4802	1488555.6477
PC	627+83.55	845634.3014	1488765.2433
PI	629+59.28	845808.8094	1488785.9802
PT	631+34.92	845984.2319	1488796.4678
POE	632+23.52	846072.6748	1488801.7554

LOWER NEWTON ROAD (VT 38)

POINT TYPE	STATION	NORTHING	EASTING
POB	800+00.00	846180.9168	1488546.7125
PC	800+99.19	846139.2353	1488636.7155
PI	801+63.75	846112.1051	1488695.2980
PRC	802+28.23	846090.1085	1488755.9949
PI	803+37.50	846052.8755	1488858.7352
PT	804+46.40	846001.1449	1488954.9943
PC	805+64.76	845945.1125	1489059.2580
PI	805+97.19	845929.7613	1489087.8230
PT	806+29.62	845915.3443	1489116.8708
PC	807+49.45	845862.0674	1489224.2145
PI	808+35.34	845823.8866	1489301.1419
PT	809+21.05	845794.1598	1489381.7144
POE	809+49.77	845784.2208	1489408.6535

LOWER WELDEN STREET

POINT TYPE	STATION	NORTHING	EASTING
POB	2001+75.00	841699.5631	1487667.0831
POE	2005+50.00	841572.4384	1488019.8781

LAKE STREET (VT 36)

POINT TYPE	STATION	NORTHING	EASTING
POB	37+50.00	842895.7984	1488165.8462
PC	40+29.45	842875.8205	1488444.5811
PI	40+75.67	842872.5160	1488490.6864
PT	41+21.90	842868.9984	1488536.7759
POE	41+50.00	842866.8598	1488564.7975

SOUTH MAIN STREET (US 7)

POINT TYPE	STATION	NORTHING	EASTING
POB	898+50.00	839238.4301	1487432.0233
PC	898+81.87	839265.8766	1487448.2311
PI	900+34.93	839397.6667	1487526.0564
PT	901+87.98	839529.9309	1487603.0735
POE	904+50.00	839756.3592	1487734.9222

NORTH MAIN STREET (US 7)

POINT TYPE	STATION	NORTHING	EASTING
POB	1001+50.00	845630.7536	1489386.2516
POE	1005+00.00	845977.0833	1489436.8059

ST. ALBANS STATE HIGHWAY (I-89 ACCESS)

POINT TYPE	STATION	NORTHING	EASTING
POB	3000+00.00	839422.7942	1487793.7379
PC	3000+50.00	839445.0855	1487748.9819
PI	3001+12.05	839472.7481	1487693.4414
PT	3001+74.03	839504.9032	1487640.3754
POE	3002+18.96	839528.1880	1487601.9482

LEGEND

POB	POINT OF BEGINNING ALIGNMENT
PC	POINT OF CURVATURE
PI	POINT OF INTERSECTION
PT	POINT OF TANGENCY
PCC	POINT OF COMPOIUND CURVATURE
PRC	POINT OF REVERSE CURVATURE
POE	POINT OF END ALIGNMENT

NOTE:

SEE ALIGNMENT LAYOUT PLANS FOR ADDITIONAL ALIGNMENT INFORMATION.

Differs from Vertical Datum on Cover Sheet

DATUM
VERTICAL NGVD 1929
HORIZONTAL NAD 83

PROJECT NAME: ST. ALBANS
PROJECT NUMBER: HPP 8000(17)

FILE NAME: 57414_AL1.dgn
PROJECT LEADER: J.D. SALADINO
DESIGNED BY: D. M. PECK
ALIGNMENT POINTS SHEET

PLOT DATE: 3/4/2016
DRAWN BY: G. GOMEZ
CHECKED BY: M.J. SERVETAS
SHEET 21 OF 230

CURVE NSC 1	CURVE NSC 2	CURVE SM 1	CURVE C 1
Δ = 11°38′47″	DELTA = 93°41′53″	Δ = 0°21′03″	Δ = 4°44′15″
Dc = 4°46′29″	Dc = 57°17′45″	Dc = 0°06′53″	Dc = 3°49′11″
R = 1200.00′	R = 100.00′	R = 50000.00′	R = 1500.00′
T = 122.38′	T = 106.67′	T = 153.05′	T = 62.05′
L = 243.92′	L = 163.53′	L = 306.11′	L = 124.03′
E = 6.22′	E = 46.22′	E = 0.23′	E = 1.28′

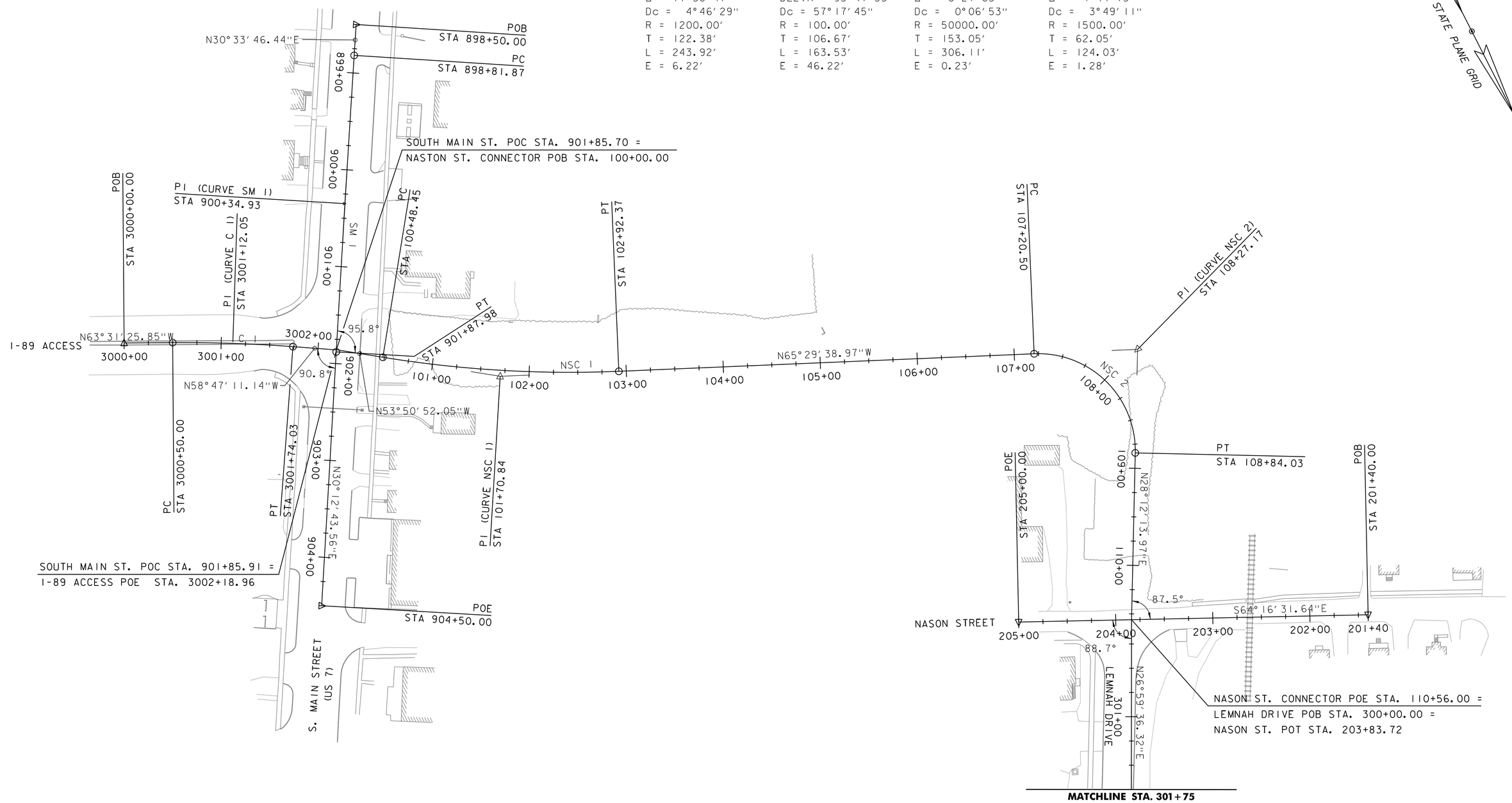

0 50 100
SCALE IN FEET

vhb

PROJECT NAME: ST. ALBANS	
PROJECT NUMBER: HPP 8000(17)	
FILE NAME: 57414_AL1.dgn	PLOT DATE: 3/4/2016
PROJECT LEADER: J. D. SALADINO	DRAWN BY: G. GOMEZ
DESIGNED BY: D. M. PECK	CHECKED BY: M.J. SERVETAS
ALIGNMENTS LAYOUT SHEET (1 OF 6)	SHEET 22 OF 230

CURVE LD 1
Δ = 5°39′36″ L
Dc = 3°49′11″
R = 1500.00′
T = 74.15′
L = 148.18′
E = 1.83′

CURVE LD 2
Δ = 7°30′50″ R
Dc = 4°48′02″
R = 1193.50′
T = 78.37′
L = 156.52′
E = 2.57′

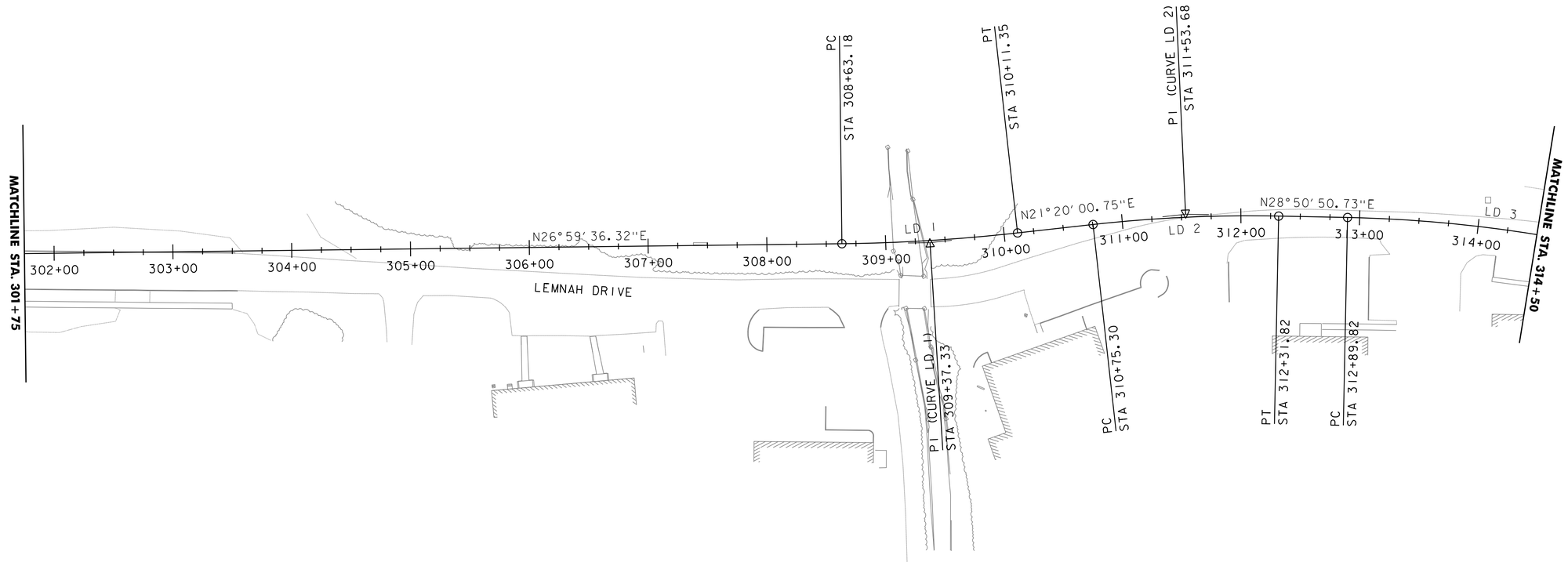

0 50 100
SCALE IN FEET

PROJECT NAME: ST. ALBANS	
PROJECT NUMBER: HPP 8000(17)	
FILE NAME: 57414_ALI.dgn	PLOT DATE: 3/4/2016
PROJECT LEADER: J. D. SALADINO	DRAWN BY: G. GOMEZ
DESIGNED BY: D. M. PECK	CHECKED BY: M.J. SERVETAS
ALIGNMENTS LAYOUT SHEET (2 OF 6)	SHEET 23 OF 230

CURVE LD 3	CURVE A 1	CURVE A 2	CURVE A 3	CURVE S 1
Δ = 21°56′17″ R	Δ = 12°42′50″	Δ = 23°58′57″	Δ = 40°21′35″	Δ = 88°28′59″
Dc = 4°59′59″	Dc = 5°28′39″	Dc = 14°41′28″	Dc = 20°50′05″	Dc = 47°44′47″
R = 1146.00′	R = 1046.00′	R = 390.00′	R = 275.00′	R = 120.00′
T = 222.12′	T = 116.53′	T = 82.83′	T = 101.07′	T = 116.86′
L = 438.79′	L = 232.11′	L = 163.24′	L = 193.71′	L = 185.32′
E = 21.33′	E = 6.47′	E = 8.70′	E = 17.99′	E = 47.50′

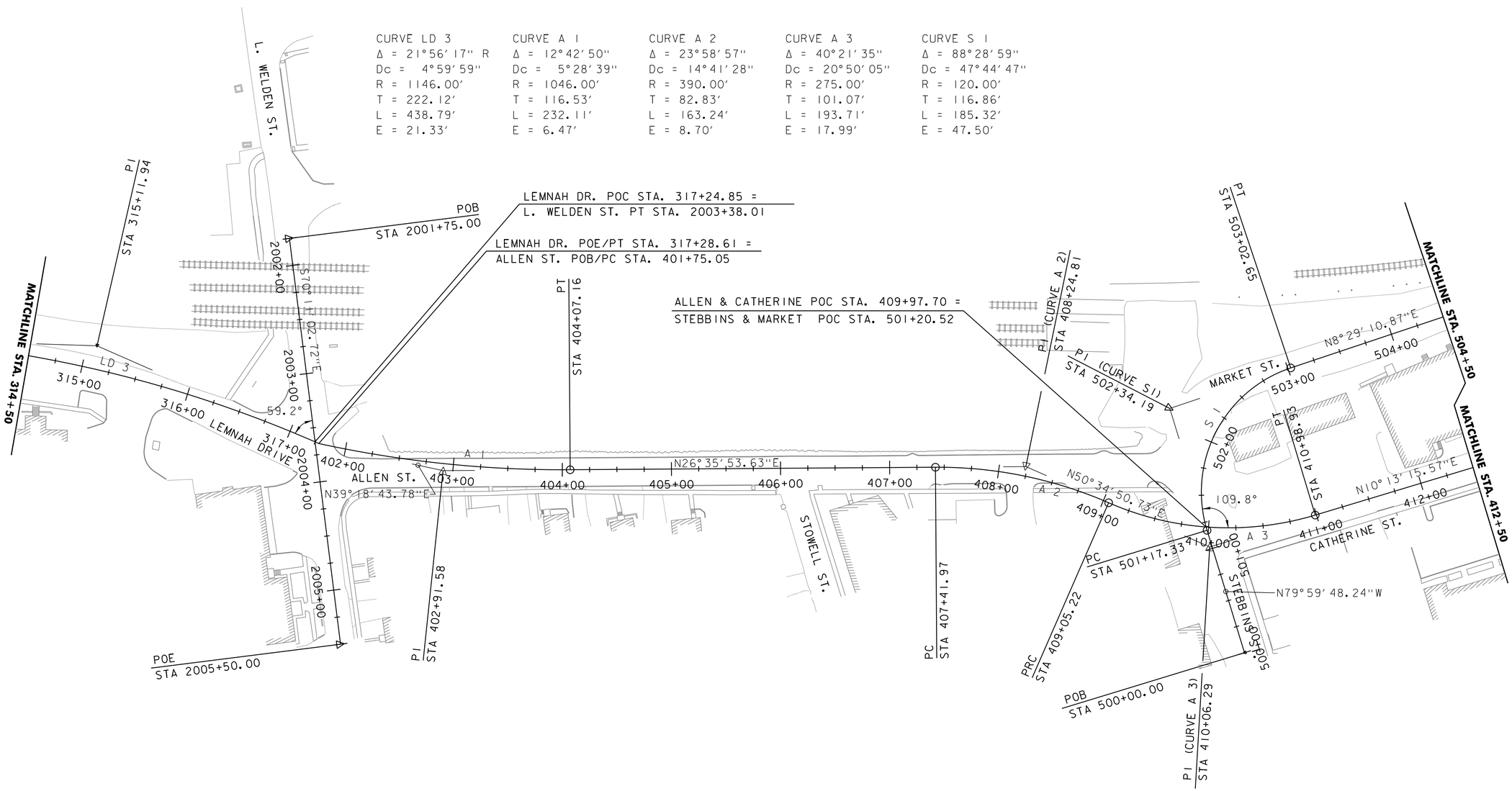

0 550 100
SCALE IN FEET

vhb

PROJECT NAME: ST. ALBANS	
PROJECT NUMBER: HPP 8000(17)	
FILE NAME: 57414_ALI.dgn	PLOT DATE: 3/4/2016
PROJECT LEADER: J. D. SALADINO	DRAWN BY: G. GOMEZ
DESIGNED BY: D. M. PECK	CHECKED BY: M.J. SERVETAS
ALIGNMENTS LAYOUT SHEET (3 OF 6)	SHEET 24 OF 230

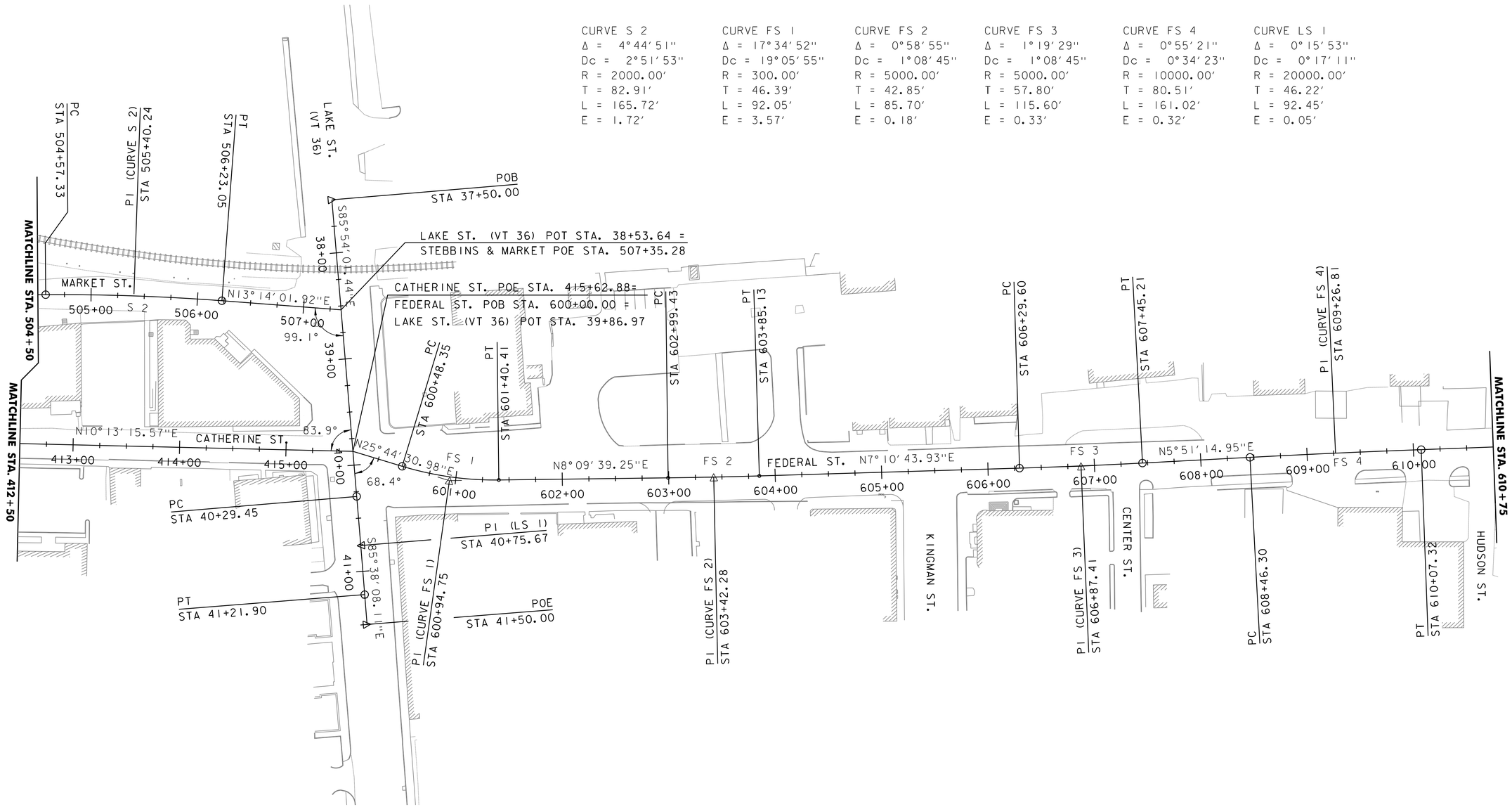

PROJECT NAME: ST. ALBANS	
PROJECT NUMBER: HPP 8000(17)	
FILE NAME: 57414_ALI.dgn	PLOT DATE: 3/4/2016
PROJECT LEADER: J. D. SALADINO	DRAWN BY: G. GOMEZ
DESIGNED BY: D. M. PECK	CHECKED BY: M.J. SERVETAS
ALIGNMENTS LAYOUT SHEET (4 OF 6)	SHEET 25 OF 230

VHB 57414.00

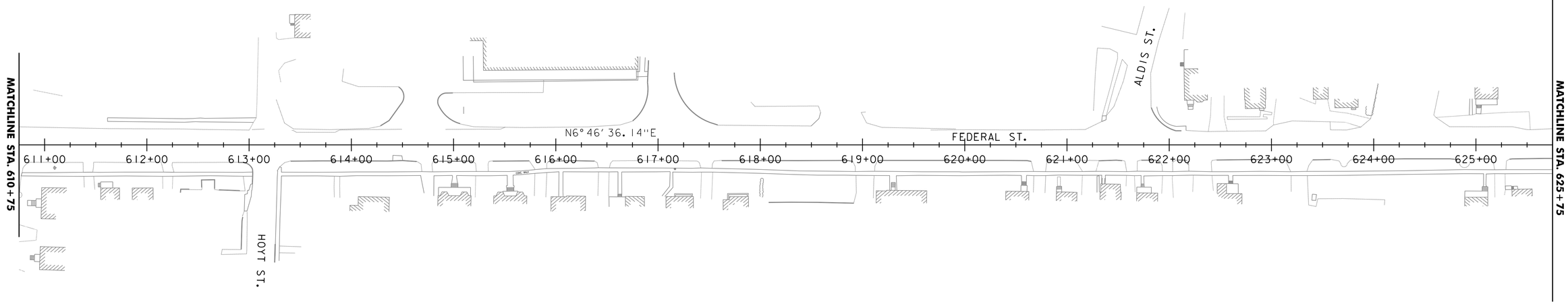

0 50 100
SCALE IN FEET

PROJECT NAME: ST. ALBANS	
PROJECT NUMBER: HPP 8000(17)	
FILE NAME: 57414_AL1.dgn	PLOT DATE: 3/4/2016
PROJECT LEADER: J. D. SALADINO	DRAWN BY: G. GOMEZ
DESIGNED BY: D. M. PECK	CHECKED BY: M.J. SERVETAS
ALIGNMENTS LAYOUT SHEET (5 OF 6)	SHEET 26 OF 230

VHB 57414.00

CURVE FS 5	CURVE LN 1	CURVE LN 2	CURVE LN 3	CURVE LN 4
Δ = 3°21′19″	Δ = 4°55′44″	Δ = 8°20′01″	Δ = 1°51′28″	Δ = 6°08′42″
Dc = 0°57′18″	Dc = 3°49′11″	Dc = 3°49′11″	Dc = 2°51′53″	Dc = 3°34′52″
R = 6000.00′	R = 1500.00′	R = 1500.00′	R = 2000.00′	R = 1600.00′
T = 175.74′	T = 64.56′	T = 109.28′	T = 32.43′	T = 85.88′
L = 351.37′	L = 129.04′	L = 218.17′	L = 64.85′	L = 171.60′
E = 2.57′	E = 1.39′	E = 3.98′	E = 0.26′	E = 2.30′

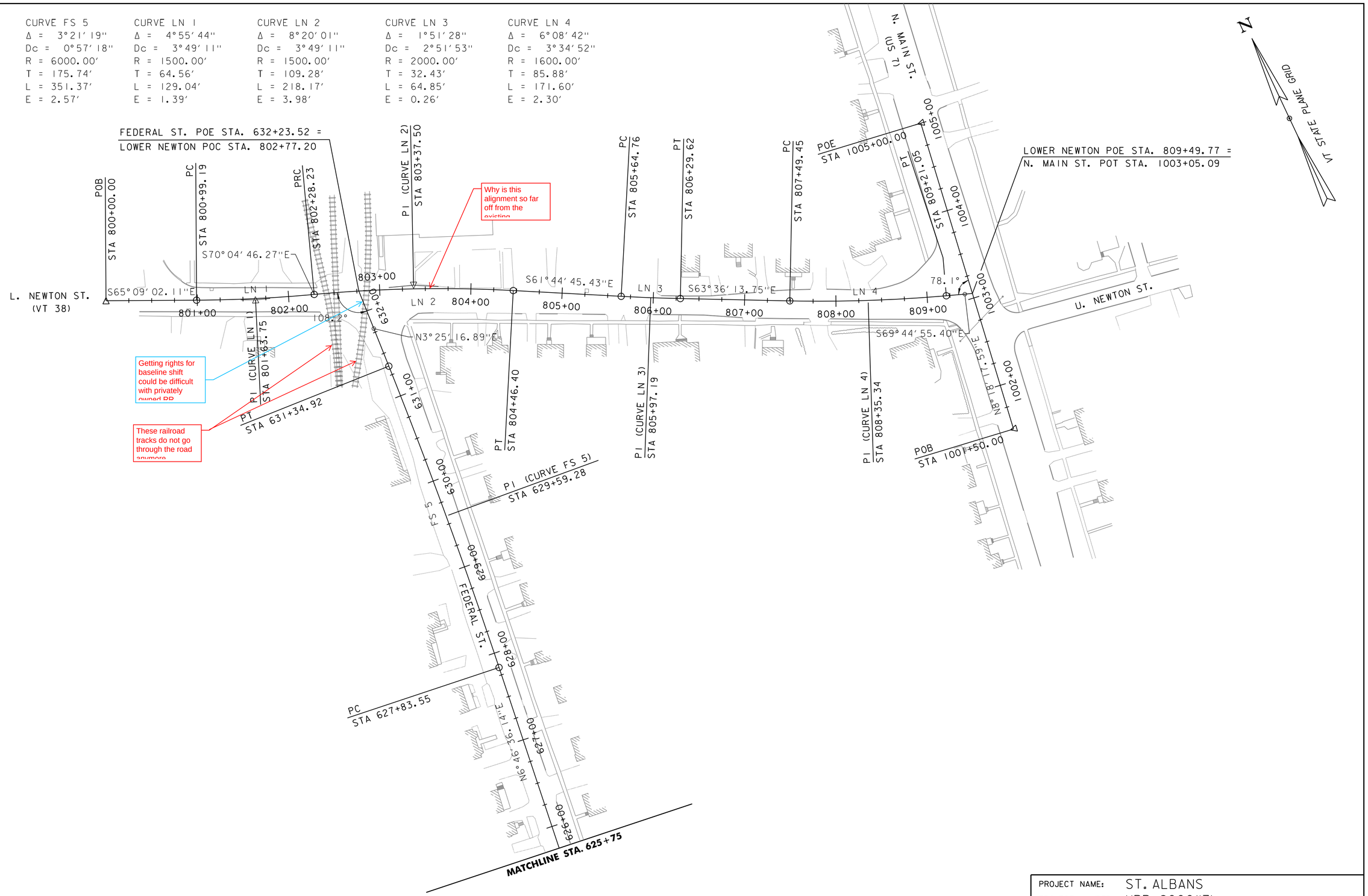

0 50 100
SCALE IN FEET

vhb

PROJECT NAME: ST. ALBANS	
PROJECT NUMBER: HPP 8000(17)	
FILE NAME: 57414_ALI.dgn	PLOT DATE: 3/4/2016
PROJECT LEADER: J. D. SALADINO	DRAWN BY: G. GOMEZ
DESIGNED BY: D. M. PECK	CHECKED BY: M.J. SERVETAS
ALIGNMENTS LAYOUT SHEET (6 OF 6)	SHEET 27 OF 230

MATCHLINE STA. 101+85

This line-type is shown as existing fence on Legend

For all curb ramps on the project, reference a type and either C-3A or C-3B so that the contractor knows how to build them. TYP

Making the street names bold would aid in locating

STATION 100+22
BEGIN PROJECT
HPP 8000(17)

MATCH EXISTING SIDEWALK

STA. 899+00
BEGIN APPROACH

S. MAIN ST. (US 7)

Approximate Exist. R.O.W.

NASON ST. CONNECTOR

N/F KELLEY

N/F BESSERY TOWERS

N/F OUELLETTE

VT STATE PLANE GRID

PROPOSED SAWCUT LINE

Radius

Radius?

Curve length? PCC for adjacent curves? If indicated station and offset is intended to indicate this information it

What is this dimension showing?

ST. ALBANS STATE HWY (I-89 ACCESS)

STA. 904+25
END APPROACH

STA. 3000+50
BEGIN APPROACH

899+00 900+00 901+00 902+00 903+00 904+00

101+00 3002+00 3001+00 3000+00

0 20 40
SCALE IN FEET

PROJECT NAME: ST. ALBANS	
PROJECT NUMBER: HPP 8000(17)	
FILE NAME: 57414_BDR_ALI_CURB.dgn	PLOT DATE: 3/4/2016
PROJECT LEADER: J. D. SALADINO	DRAWN BY: G. GOMEZ
DESIGNED BY: D. M. PECK	CHECKED BY: M.J. SERVETAS
ROADWAY LAYOUT SHEET (1 OF 16)	SHEET 28 OF 230

VHB 57414.00

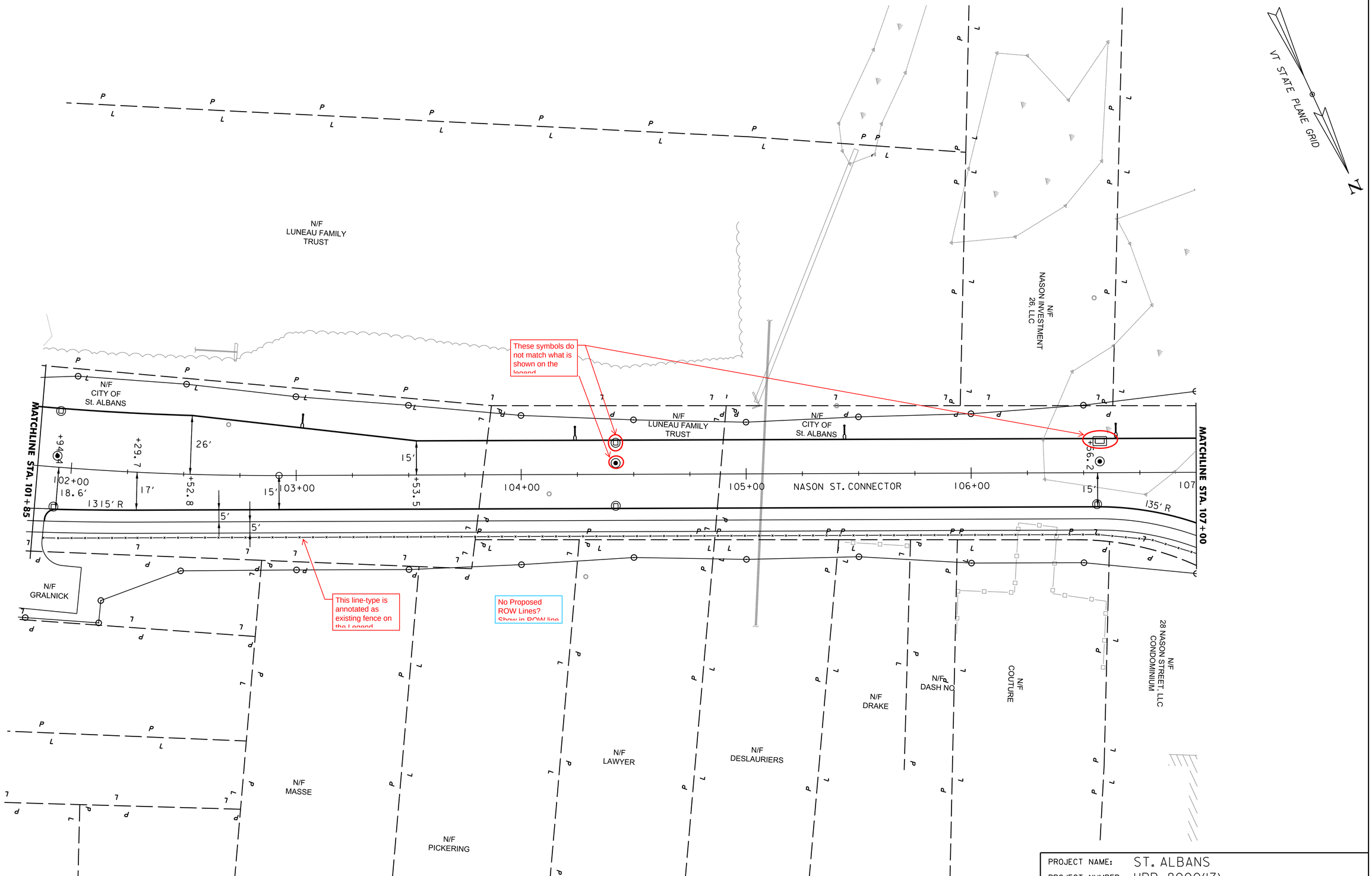

PROJECT NAME: ST. ALBANS
PROJECT NUMBER: HPP 8000(17)

FILE NAME: 57414_BDR_ALI_CURB.dgn
PROJECT LEADER: J. D. SALADINO
DESIGNED BY: D. M. PECK
ROADWAY LAYOUT SHEET (2 OF 16)

PLOT DATE: 3/4/2016
DRAWN BY: G. GOMEZ
CHECKED BY: M.J. SERVETAS
SHEET 29 OF 230

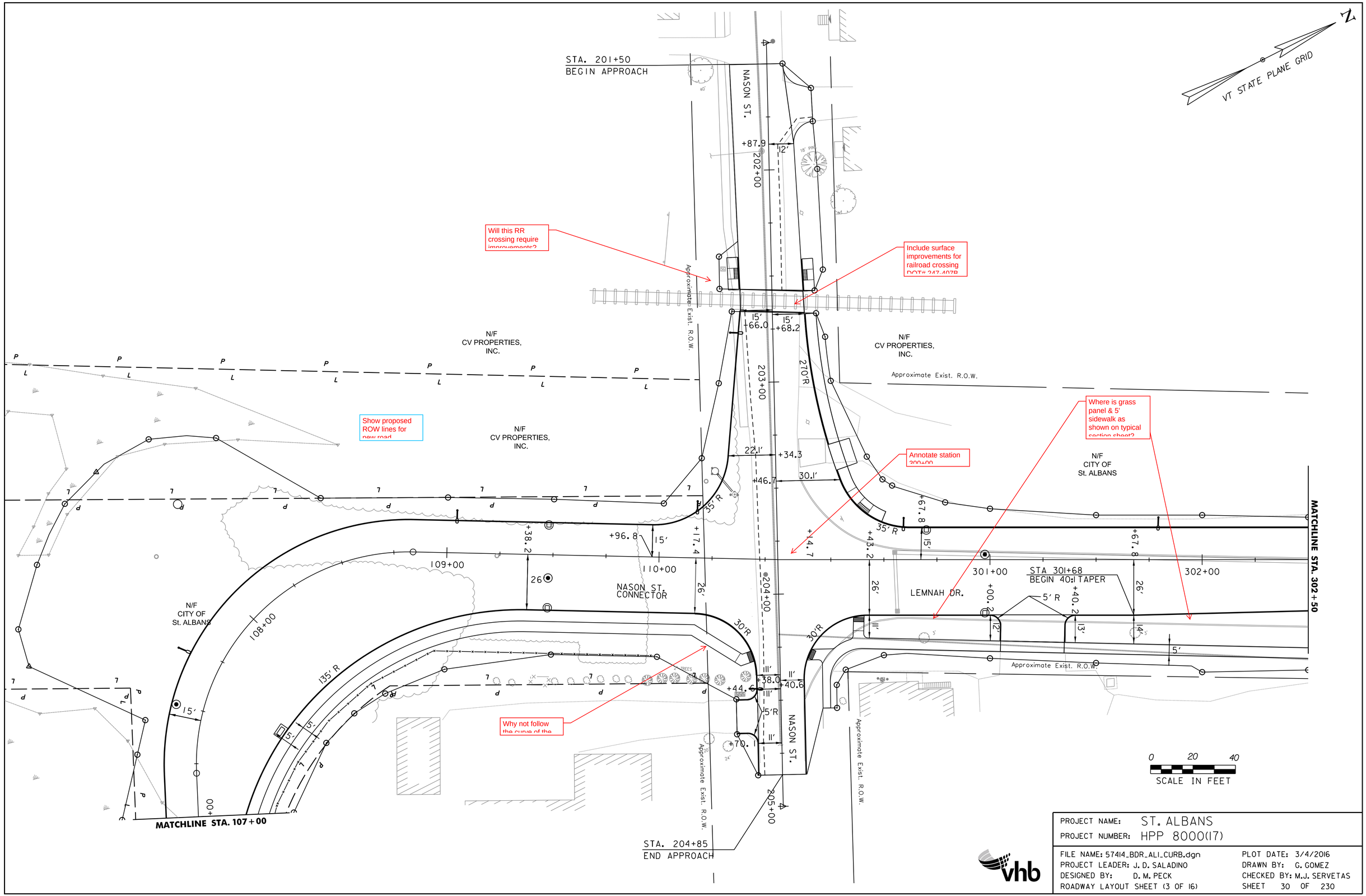

PROJECT NAME: ST. ALBANS	
PROJECT NUMBER: HPP 8000(17)	
FILE NAME: 57414_BDR_ALI_CURB.dgn	PLOT DATE: 3/4/2016
PROJECT LEADER: J. D. SALADINO	DRAWN BY: G. GOMEZ
DESIGNED BY: D. M. PECK	CHECKED BY: M.J. SERVETAS
ROADWAY LAYOUT SHEET (3 OF 16)	SHEET 30 OF 230

VHB 57414.00

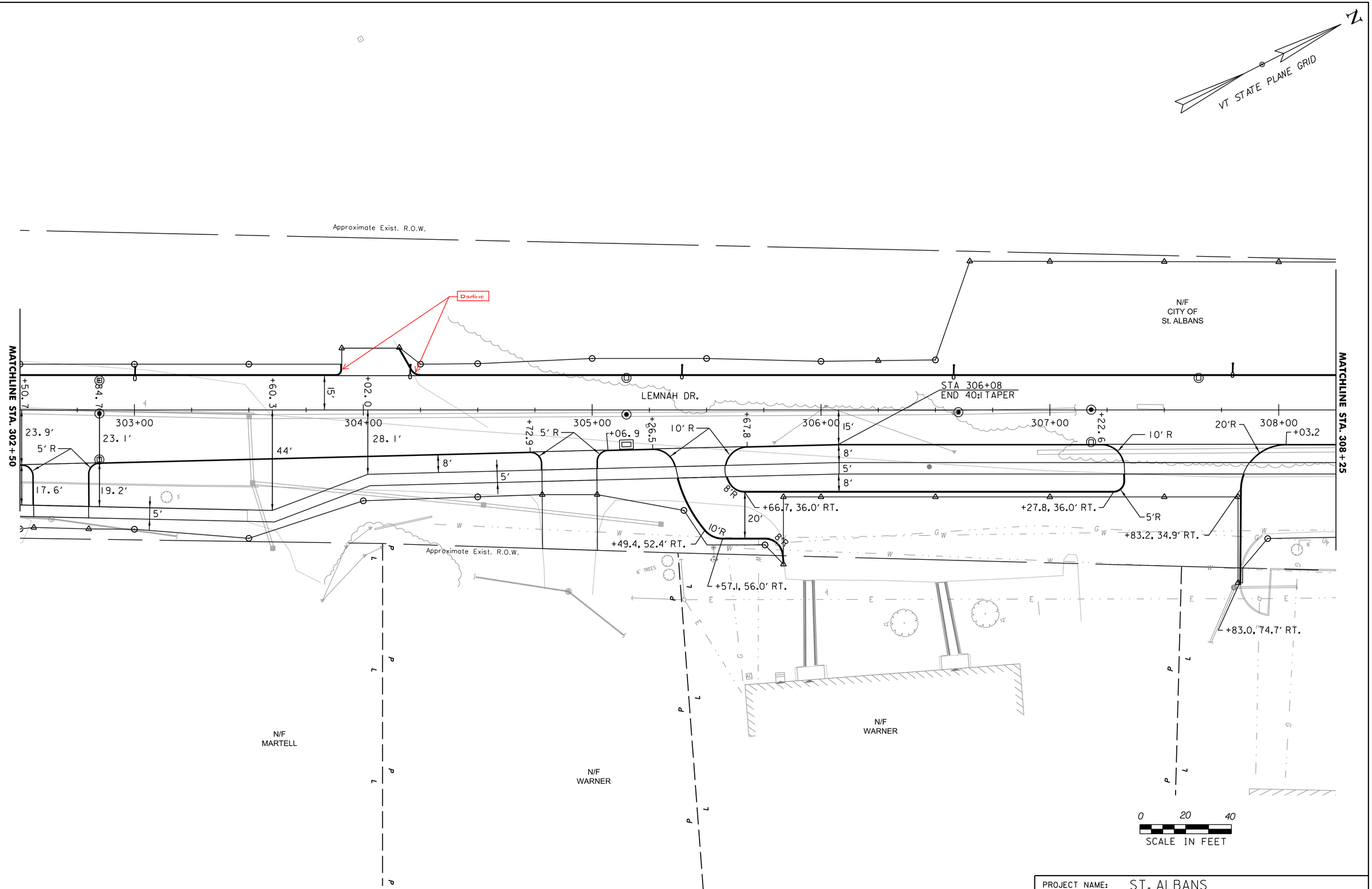

PROJECT NAME: ST. ALBANS	
PROJECT NUMBER: HPP 8000(17)	
FILE NAME: 57414_BDR_ALI_CURB.dgn	PLOT DATE: 3/4/2016
PROJECT LEADER: J. D. SALADINO	DRAWN BY: G. GOMEZ
DESIGNED BY: D. M. PECK	CHECKED BY: M.J. SERVETAS
ROADWAY LAYOUT SHEET (4 OF 16)	SHEET 31 OF 230

VHB 57414.00

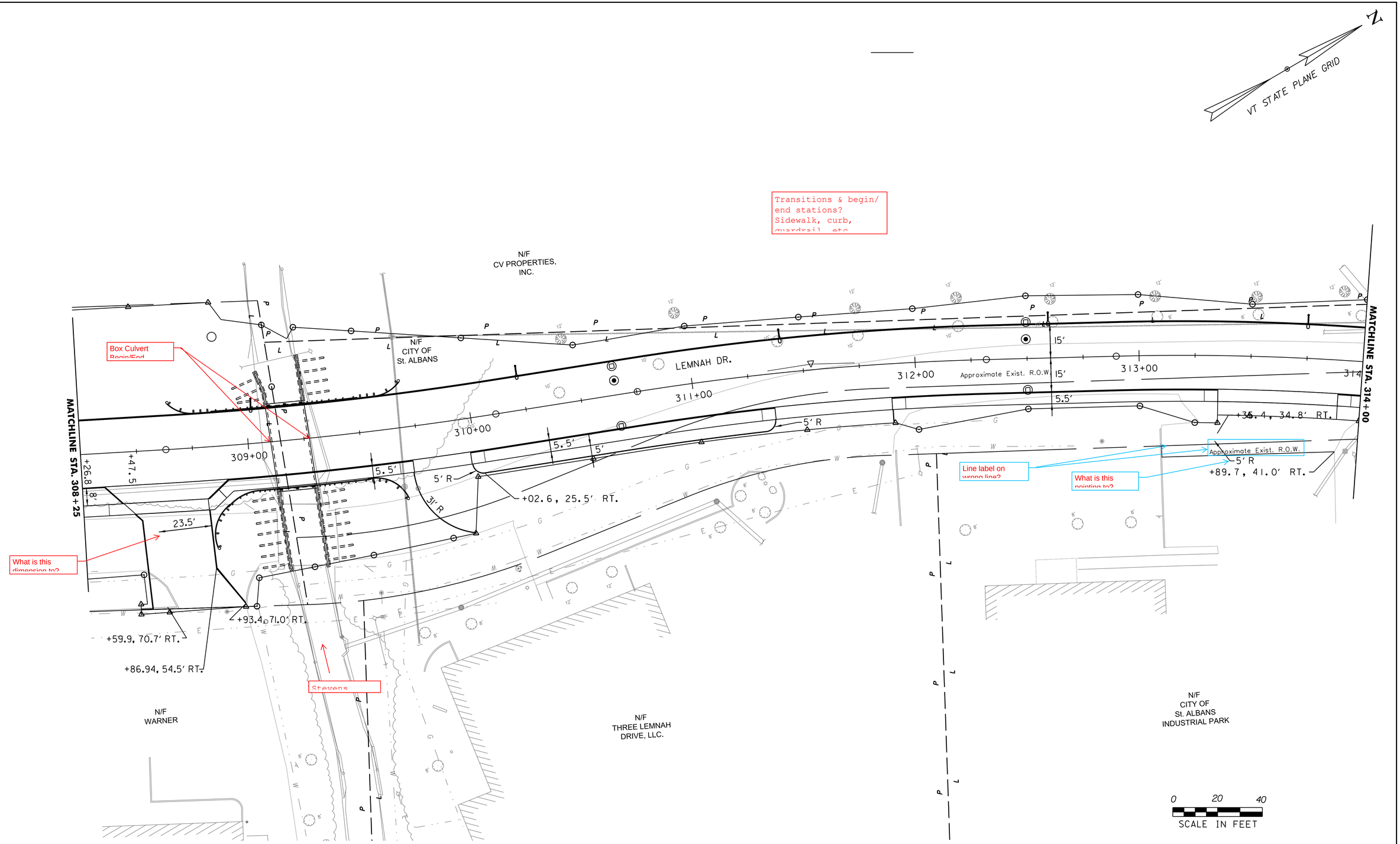

PROJECT NAME: ST. ALBANS	
PROJECT NUMBER: HPP 8000(17)	
FILE NAME: 57414_BDR_ALI_CURB.dgn	PLOT DATE: 3/4/2016
PROJECT LEADER: J. D. SALADINO	DRAWN BY: G. GOMEZ
DESIGNED BY: D. M. PECK	CHECKED BY: M.J. SERVETAS
ROADWAY LAYOUT SHEET (6 OF 16)	SHEET 32 OF 230

VHB 57414.00

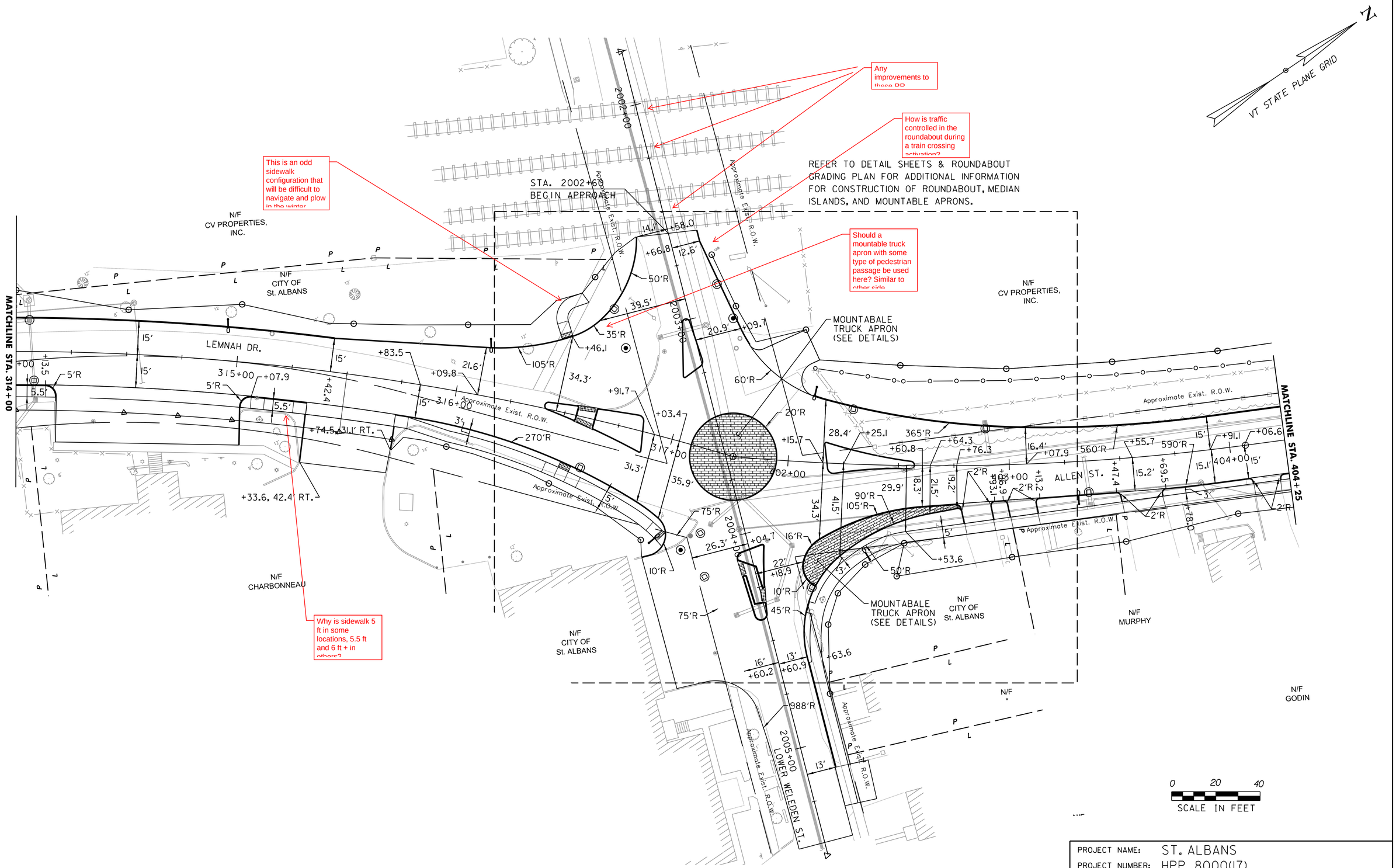

PROJECT NAME: ST. ALBANS	
PROJECT NUMBER: HPP 8000(17)	
FILE NAME: 57414_BDR_ALI_CURB.dgn	PLOT DATE: 3/4/2016
PROJECT LEADER: J. D. SALADINO	DRAWN BY: G. GOMEZ
DESIGNED BY: D. M. PECK	CHECKED BY: M.J. SERVETAS
ROADWAY LAYOUT SHEET (7 OF 16)	SHEET 33 OF 230

VHB 57414.00

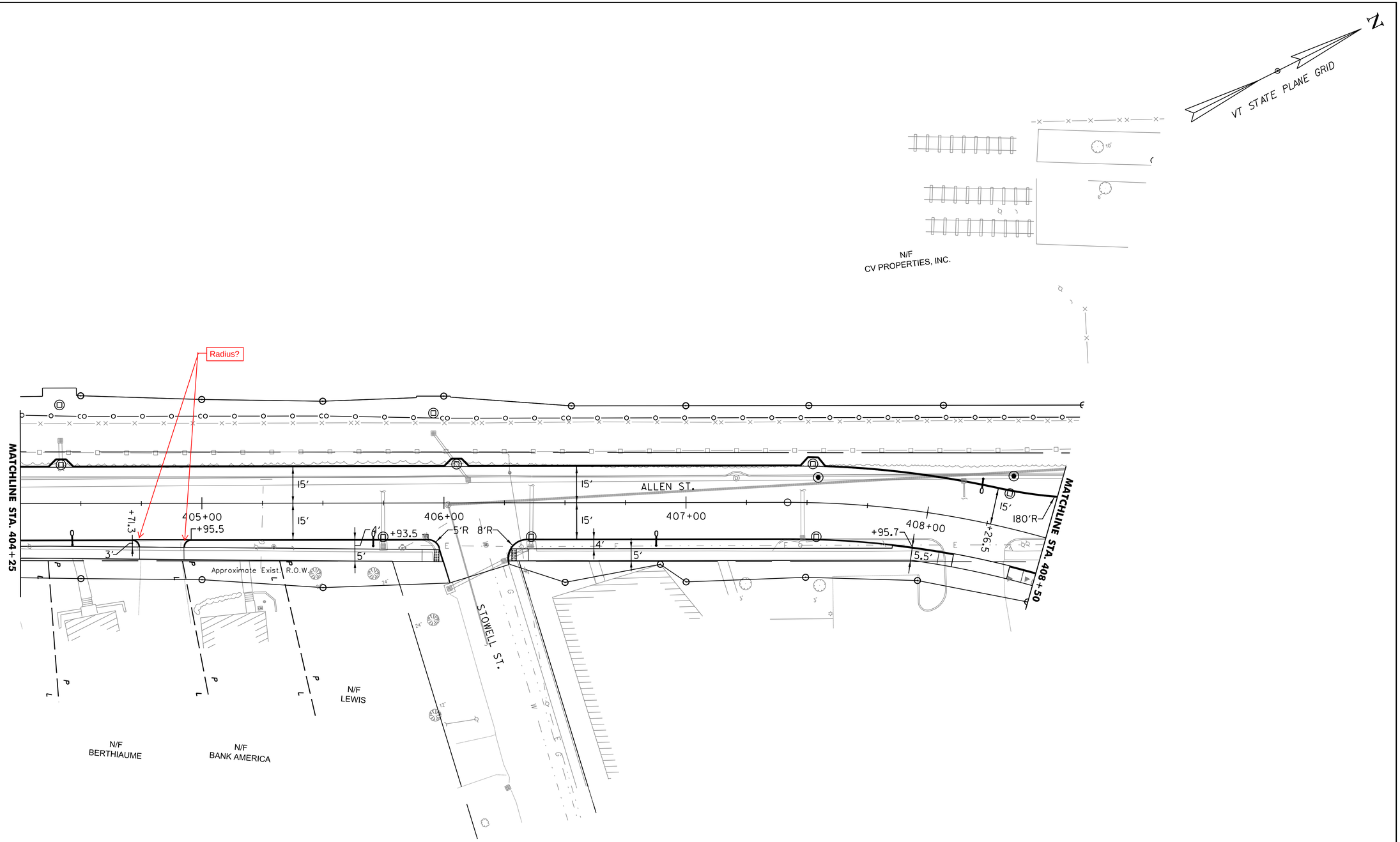

PROJECT NAME: ST. ALBANS	
PROJECT NUMBER: HPP 8000(17)	
FILE NAME: 57414_BDR_ALI_CURB.dgn	PLOT DATE: 3/4/2016
PROJECT LEADER: J. D. SALADINO	DRAWN BY: G. GOMEZ
DESIGNED BY: D. M. PECK	CHECKED BY: M.J. SERVETAS
ROADWAY LAYOUT SHEET (8 OF 16)	SHEET 34 OF 230

VHB 57414.00

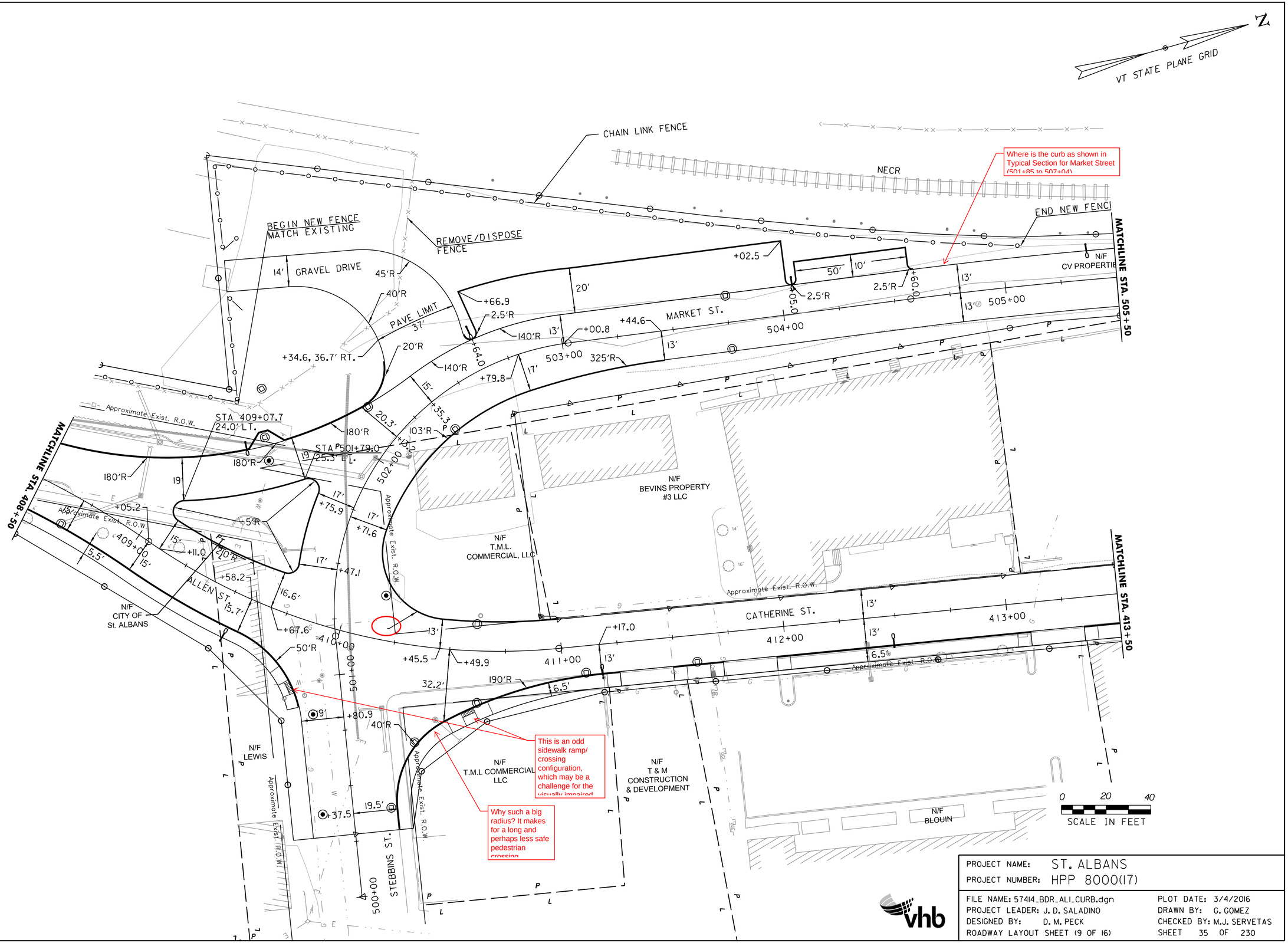

PROJECT NAME:	ST. ALBANS
PROJECT NUMBER:	HPP 8000(17)

FILE NAME: 57414_BDR_ALI_CURB.dgn	PLOT DATE: 3/4/2016
PROJECT LEADER: J. D. SALADINO	DRAWN BY: G. GOMEZ
DESIGNED BY: D. M. PECK	CHECKED BY: M.J. SERVETAS
ROADWAY LAYOUT SHEET (9 OF 16)	SHEET 35 OF 230

VHB 57414.00

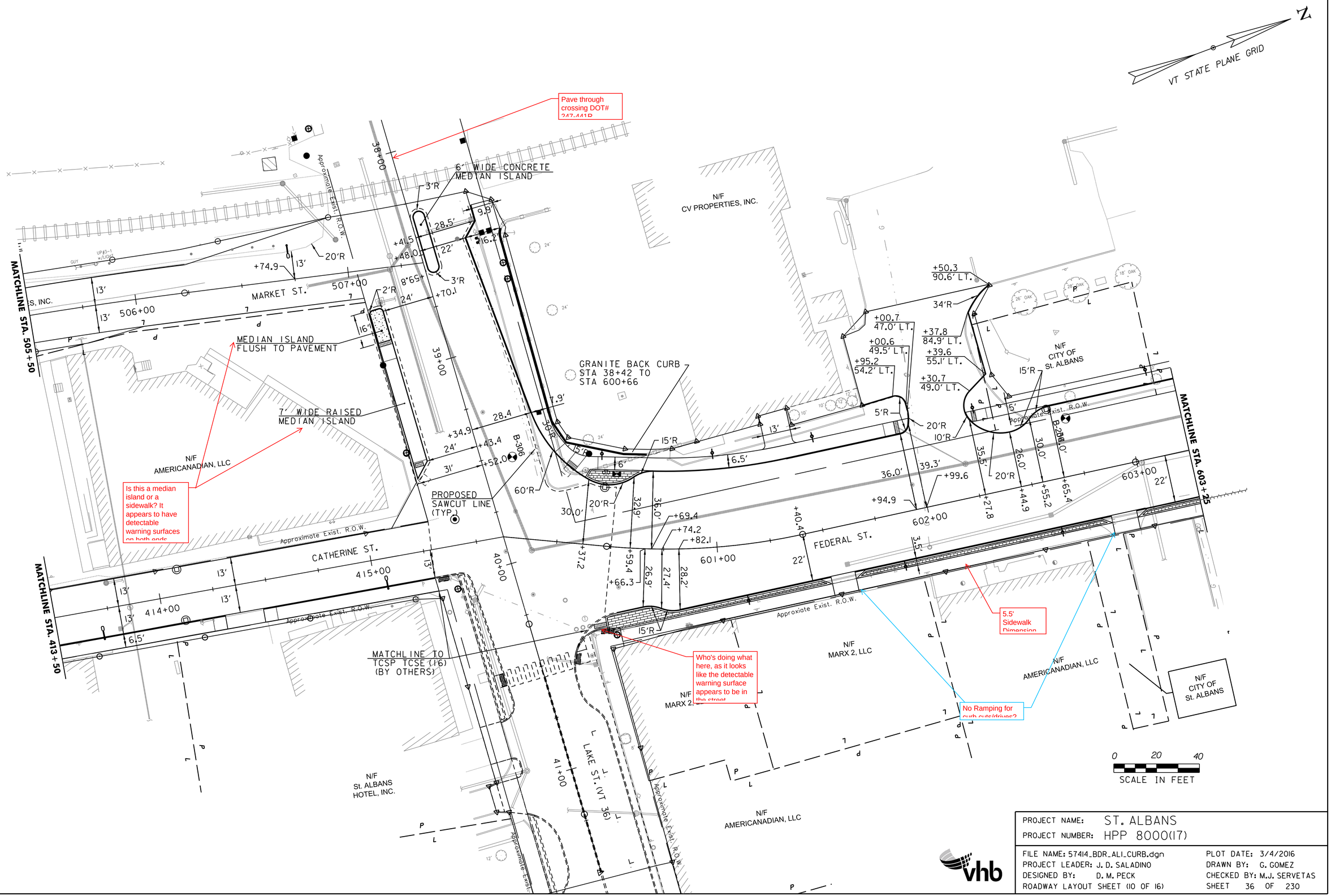

PROJECT NAME:	ST. ALBANS
PROJECT NUMBER:	HPP 8000(17)

FILE NAME: 57414_BDR_ALI_CURB.dgn	PLOT DATE: 3/4/2016
PROJECT LEADER: J. D. SALADINO	DRAWN BY: G. GOMEZ
DESIGNED BY: D. M. PECK	CHECKED BY: M.J. SERVETAS
ROADWAY LAYOUT SHEET (10 OF 16)	SHEET 36 OF 230

VHB 57414.00

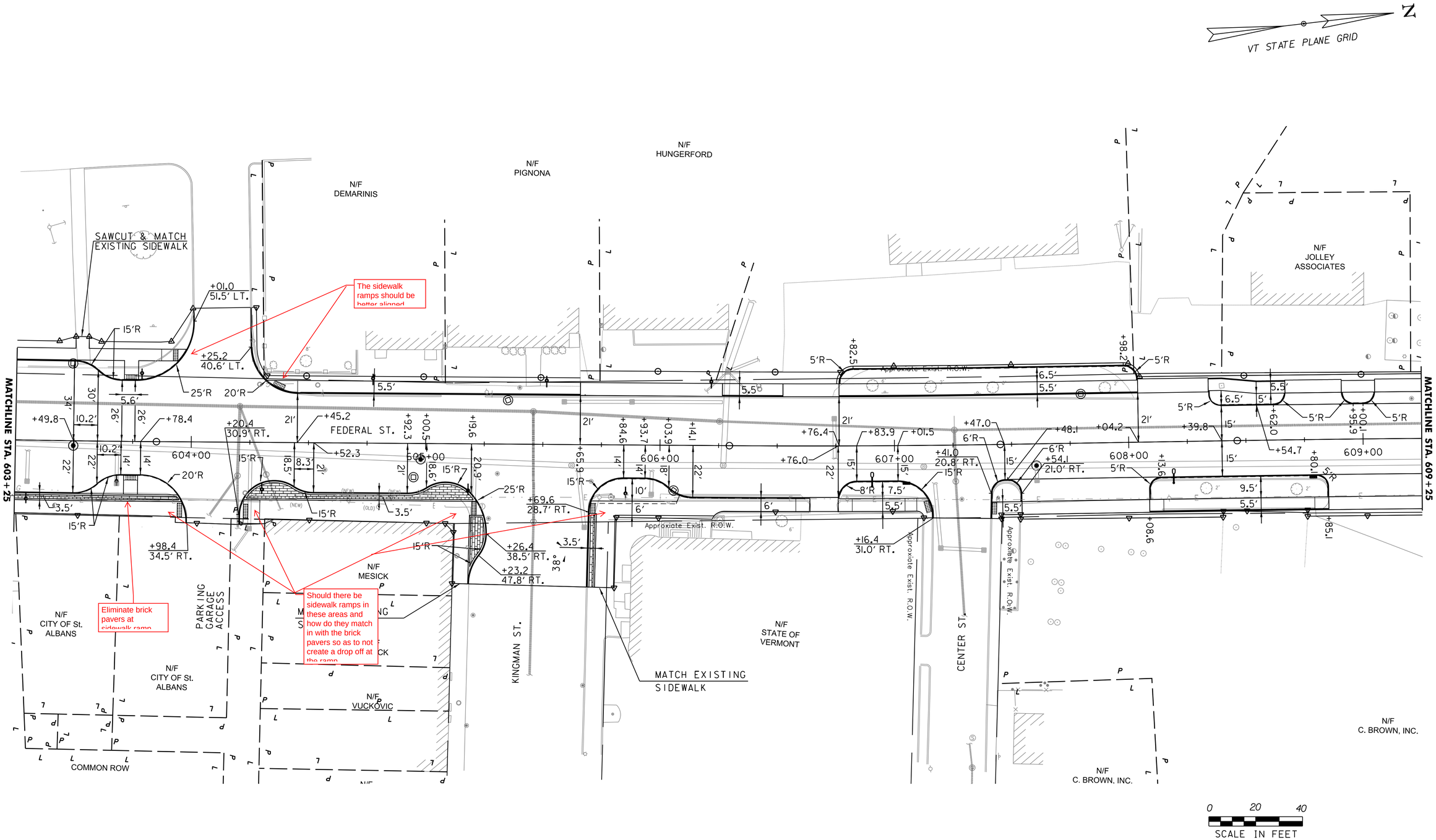

PROJECT NAME: ST. ALBANS	
PROJECT NUMBER: HPP 8000(17)	
FILE NAME: 57414_BDR_ALI_CURB.dgn	PLOT DATE: 3/4/2016
PROJECT LEADER: J. D. SALADINO	DRAWN BY: G. GOMEZ
DESIGNED BY: D. M. PECK	CHECKED BY: M.J. SERVETAS
ROADWAY LAYOUT SHEET (11 OF 16)	SHEET 37 OF 230

VHB 57414.00

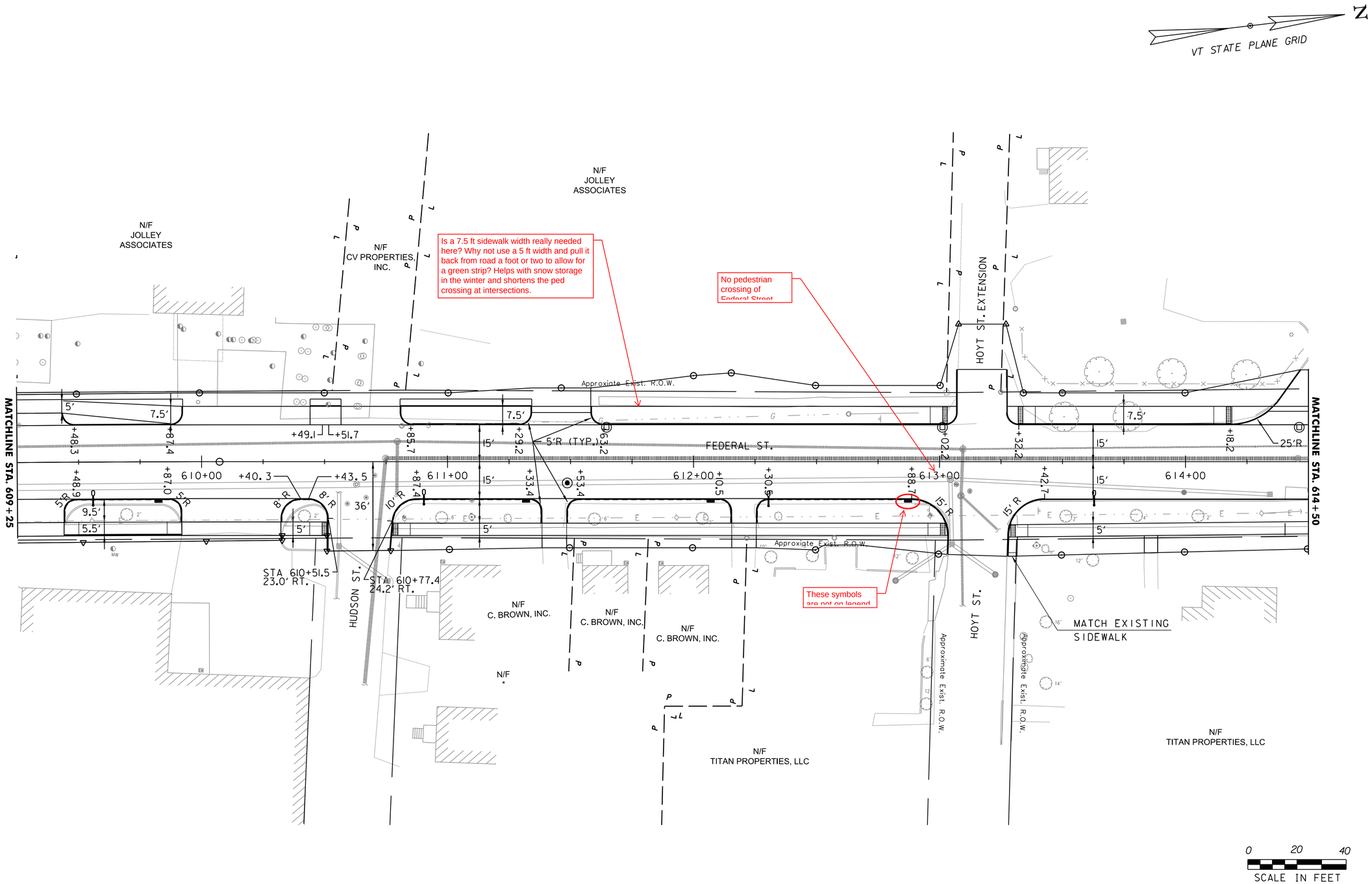

PROJECT NAME: ST. ALBANS	
PROJECT NUMBER: HPP 8000(17)	
FILE NAME: 57414_BDR_ALI_CURB.dgn	PLOT DATE: 3/4/2016
PROJECT LEADER: J. D. SALADINO	DRAWN BY: G. GOMEZ
DESIGNED BY: D. M. PECK	CHECKED BY: M.J. SERVETAS
ROADWAY LAYOUT SHEET (12 OF 16)	SHEET 38 OF 230

VHB 57414.00

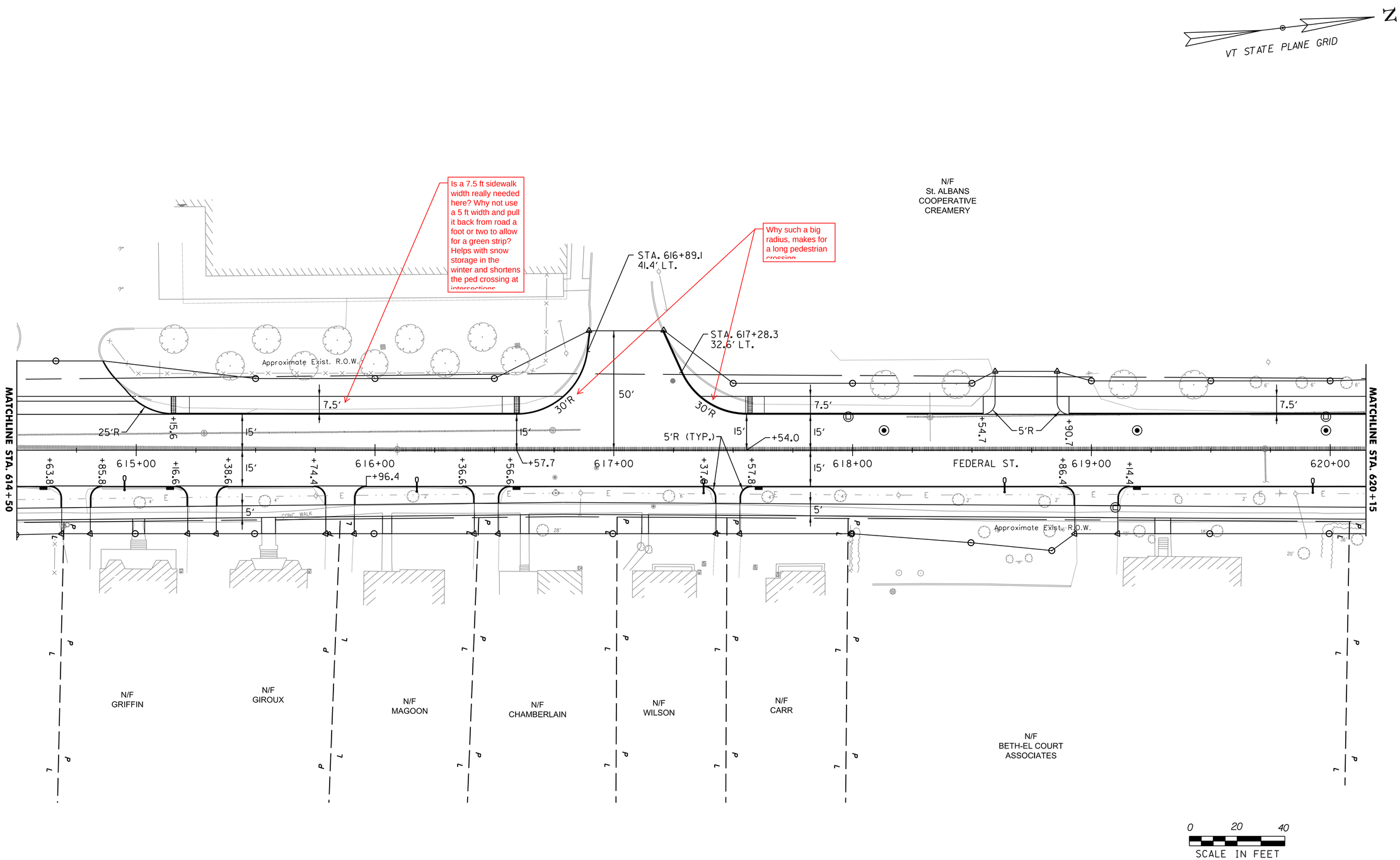

PROJECT NAME: ST. ALBANS	
PROJECT NUMBER: HPP 8000(17)	
FILE NAME: 57414_BDR_ALI_CURB.dgn	PLOT DATE: 3/4/2016
PROJECT LEADER: J. D. SALADINO	DRAWN BY: G. GOMEZ
DESIGNED BY: D. M. PECK	CHECKED BY: M.J. SERVETAS
ROADWAY LAYOUT SHEET (13 OF 16)	SHEET 39 OF 230

VHB 57414.00

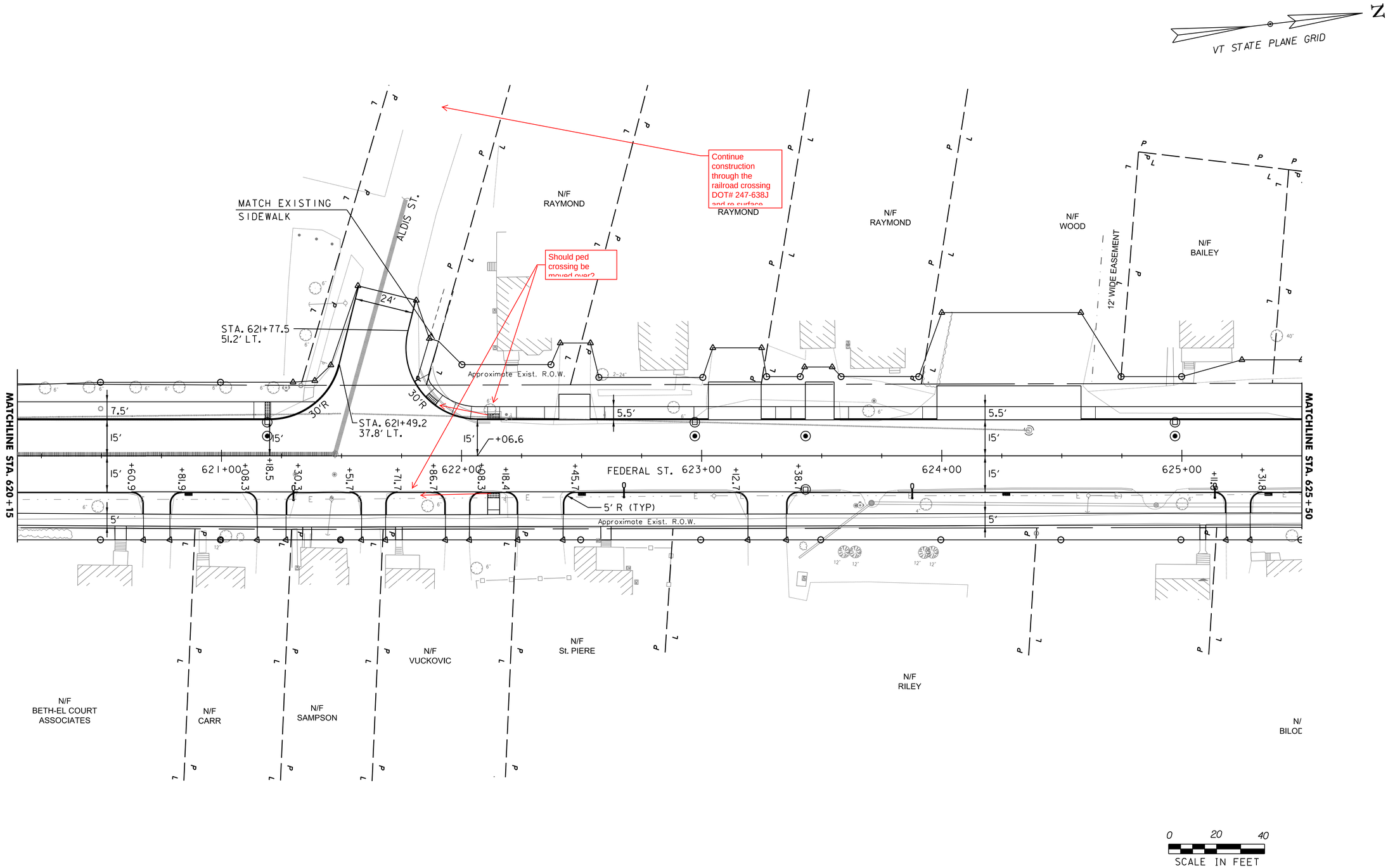

PROJECT NAME:	ST. ALBANS
PROJECT NUMBER:	HPP 8000(17)

FILE NAME: 57414_BDR_ALI_CURB.dgn	PLOT DATE: 3/4/2016
PROJECT LEADER: J. D. SALADINO	DRAWN BY: G. GOMEZ
DESIGNED BY: D. M. PECK	CHECKED BY: M.J. SERVETAS
ROADWAY LAYOUT SHEET (14 OF 16)	SHEET 40 OF 230

VHB 57414.00

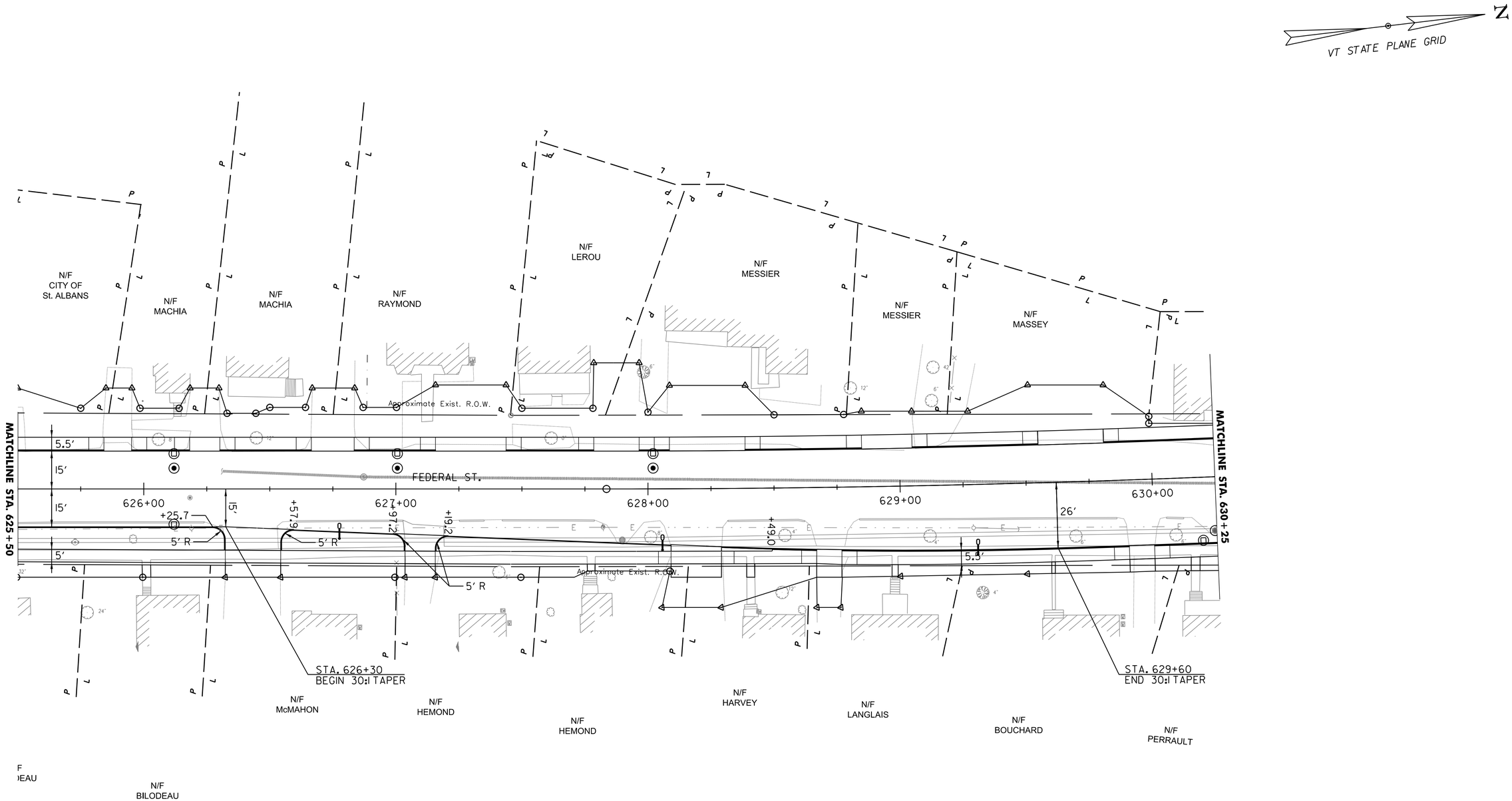

PROJECT NAME: ST. ALBANS	
PROJECT NUMBER: HPP 8000(17)	
FILE NAME: 57414_BDR_ALI_CURB.dgn	PLOT DATE: 3/4/2016
PROJECT LEADER: J. D. SALADINO	DRAWN BY: G. GOMEZ
DESIGNED BY: D. M. PECK	CHECKED BY: M.J. SERVETAS
ROADWAY LAYOUT SHEET (15 OF 16)	SHEET 41 OF 230

VHB 57414.00

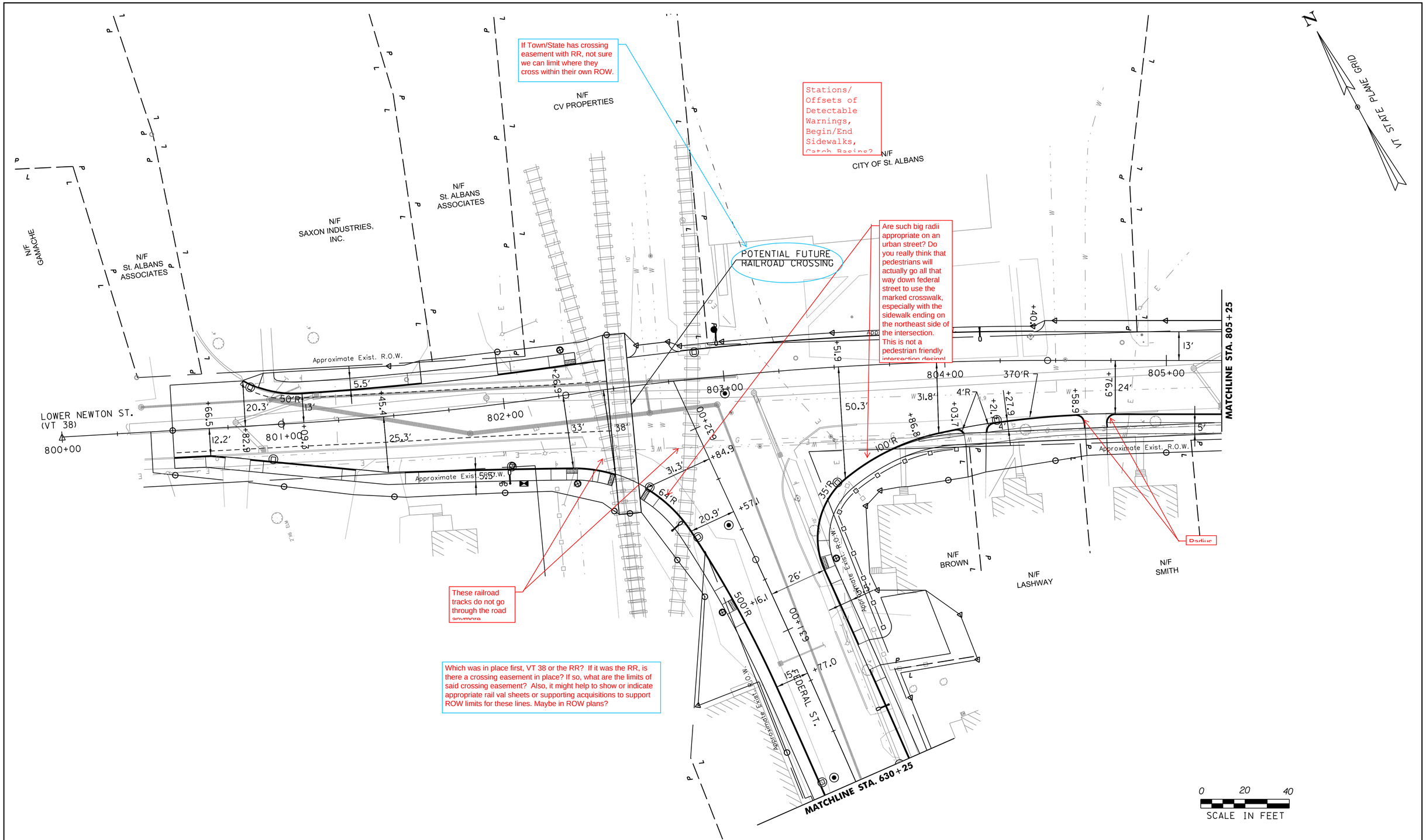

PROJECT NAME: ST. ALBANS	
PROJECT NUMBER: HPP 8000(17)	
FILE NAME: 57414_BDR_ALI_CURB.dgn	PLOT DATE: 3/4/2016
PROJECT LEADER: J. D. SALADINO	DRAWN BY: G. GOMEZ
DESIGNED BY: D. M. PECK	CHECKED BY: M.J. SERVETAS
ROADWAY LAYOUT SHEET (16 OF 16)	SHEET 42 OF 230

VHB 57414.00

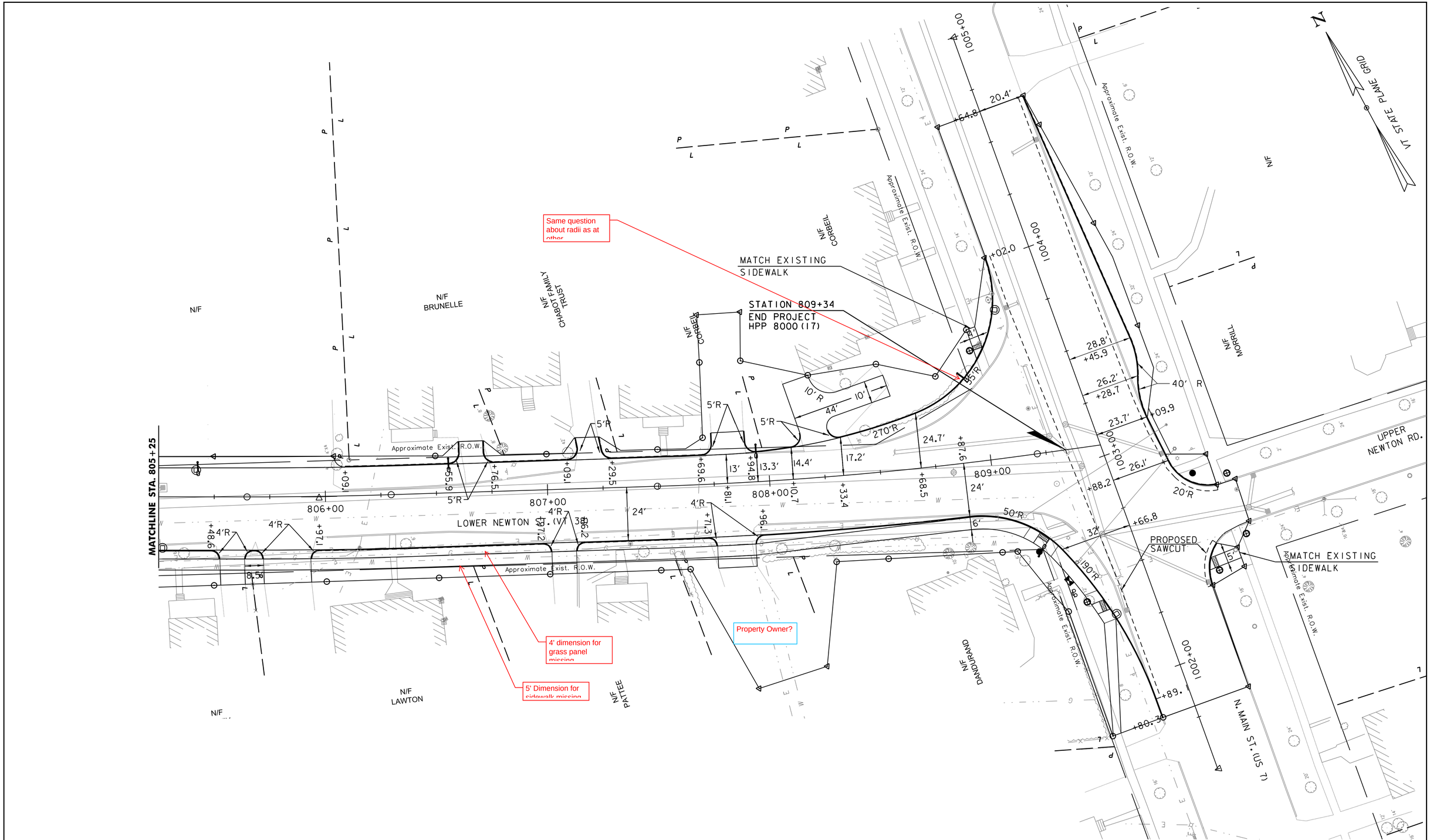

PROJECT NAME: ST. ALBANS
PROJECT NUMBER: HPP 8000(17)

FILE NAME: 57414_BDR_ALI_CURB.dgn
PROJECT LEADER: J. D. SALADINO
DESIGNED BY: D. M. PECK
ROADWAY LAYOUT SHEET (17 OF 16)

PLOT DATE: 3/4/2016
DRAWN BY: G. GOMEZ
CHECKED BY: M.J. SERVETAS
SHEET 43 OF 230

VHB 57414.00

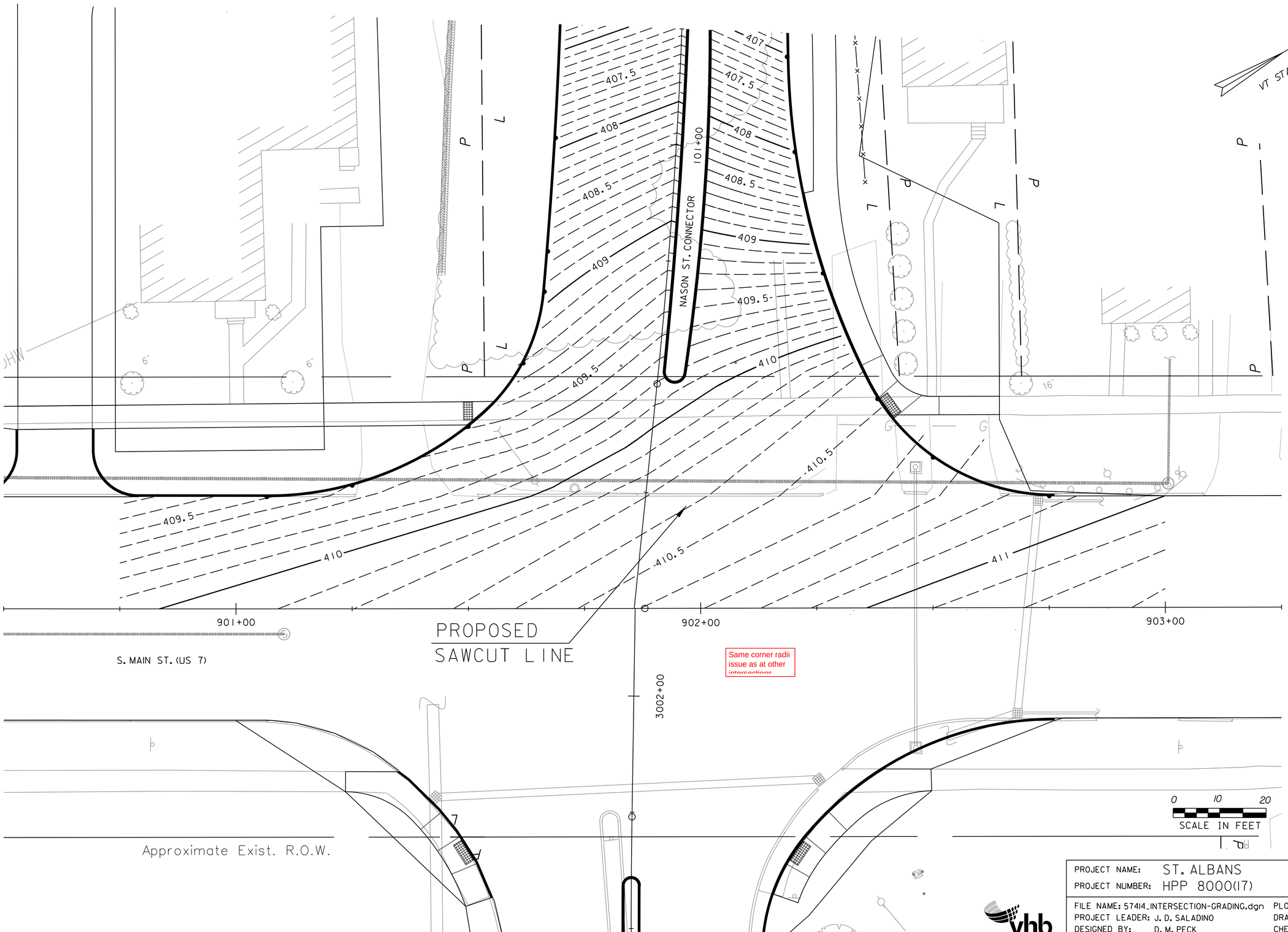

PROJECT NAME:	ST. ALBANS
PROJECT NUMBER:	HPP 8000(17)

FILE NAME: 57414_INTERSECTION-GRADING.dgn	PLOT DATE: 3/4/2016
PROJECT LEADER: J. D. SALADINO	DRAWN BY: G. GOMEZ
DESIGNED BY: D. M. PECK	CHECKED BY: M.J. SERVETAS
INTERSECTION GRADING PLAN (SHEET 1 OF 4)	SHEET 44 OF 230

VHB 57414.00

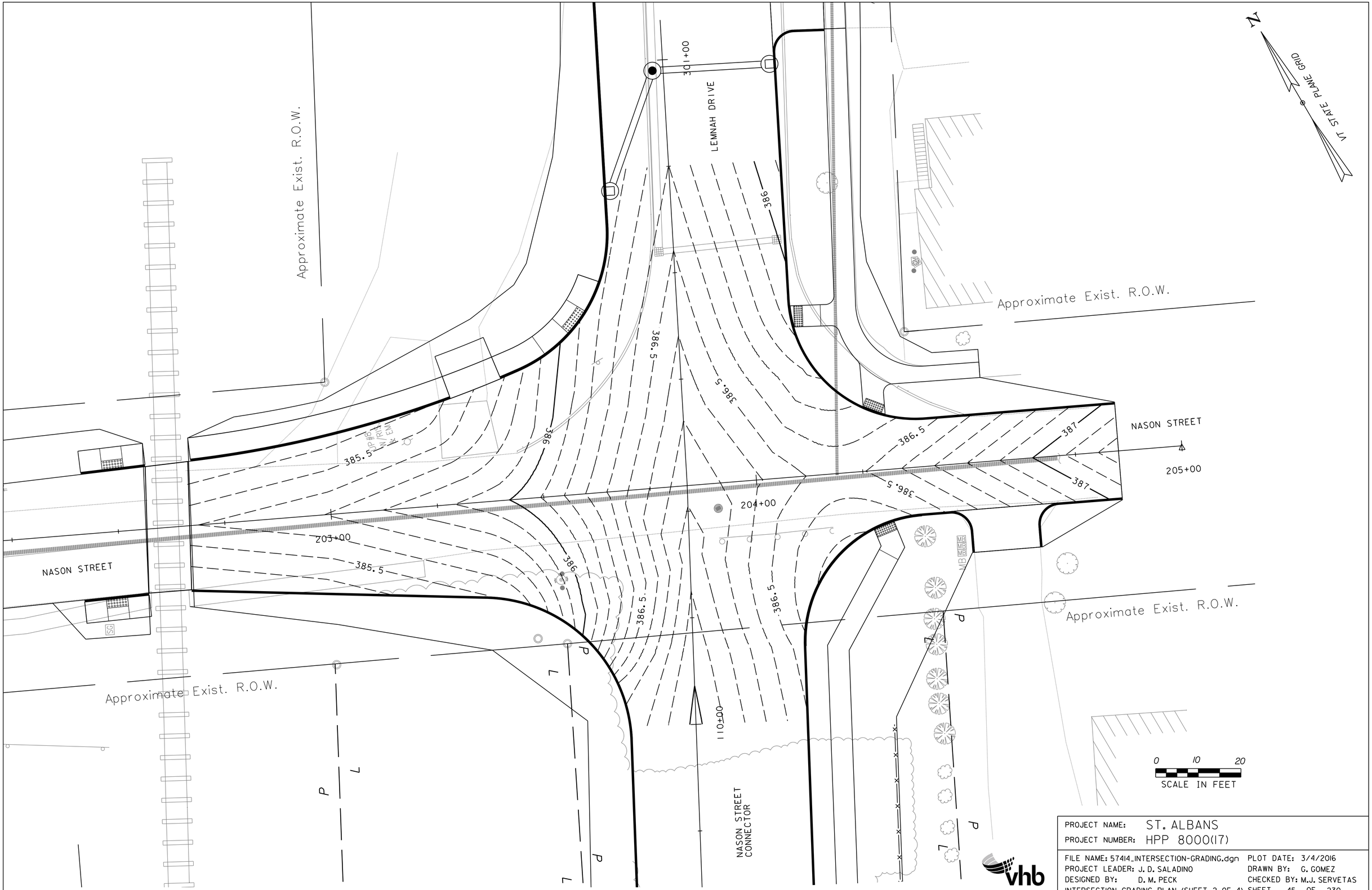

PROJECT NAME: ST. ALBANS	
PROJECT NUMBER: HPP 8000(17)	
FILE NAME: 57414_INTERSECTION-GRADING.dgn	PLOT DATE: 3/4/2016
PROJECT LEADER: J. D. SALADINO	DRAWN BY: G. GOMEZ
DESIGNED BY: D. M. PECK	CHECKED BY: M.J. SERVETAS
INTERSECTION GRADING PLAN (SHEET 2 OF 4)	SHEET 45 OF 230

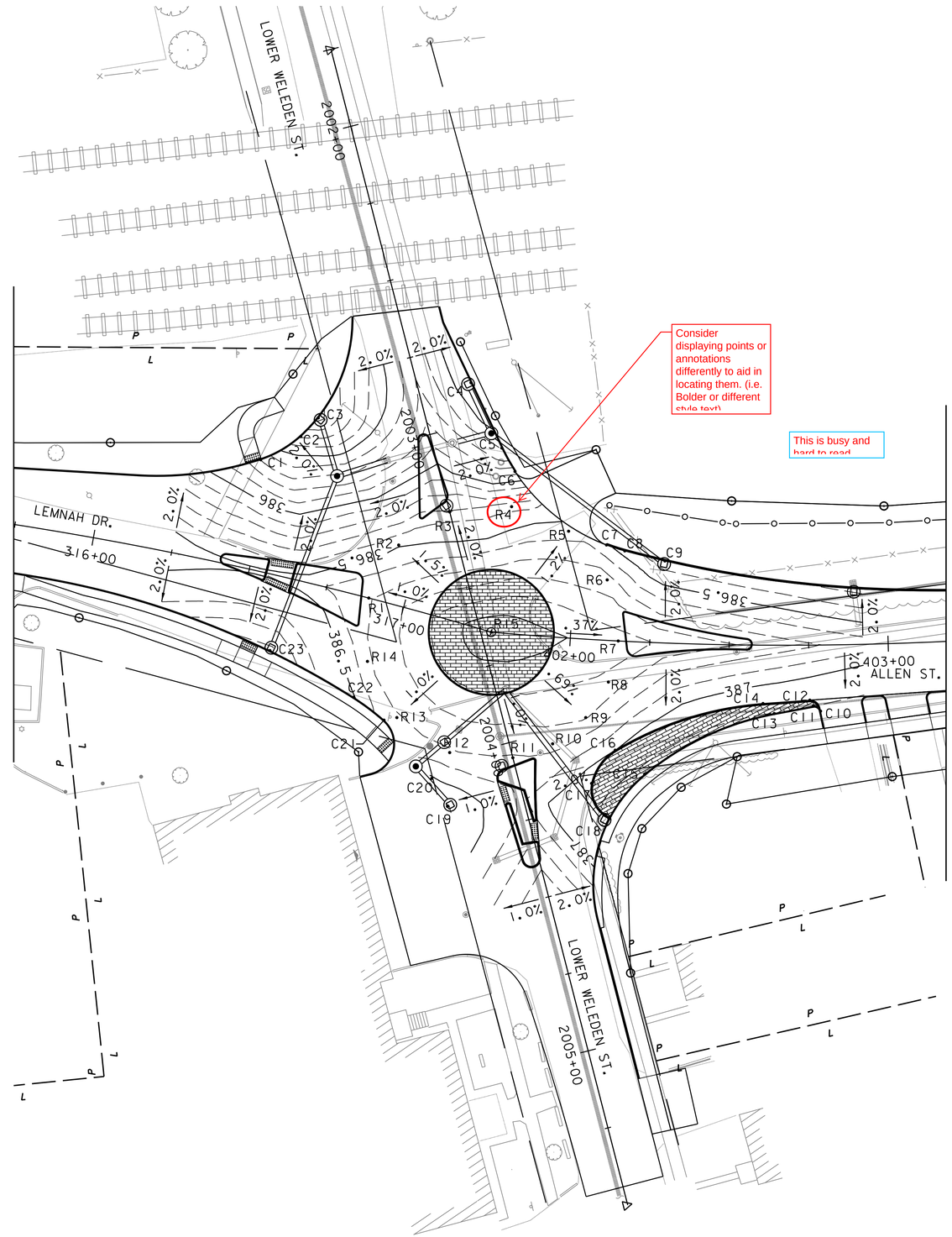

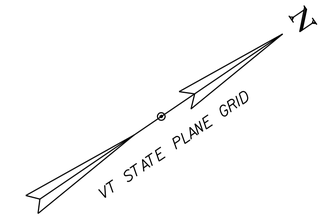

POINT	NORTHING	EASTING	STATION	OFFSET	ELEVATION	DESCRIPTION
R1	841612.42	1487816.37	316+88.66	0' CL	386.72	ROUNDABOUT
R2	841629.55	1487807.88	316+93.49	18.5' LT	386.49	ROUNDABOUT
R3	841648.67	1487808.33	2003+25.14	0' CL	386.31	ROUNDABOUT
R4	841665.70	1487817.88	2003+28.35	19.3' LT	386.35	ROUNDABOUT
R5	841676.17	1487834.35	2003+40.29	34.7' LT	386.55	ROUNDABOUT
R6	841677.61	1487853.82	402+10.58	19.0' LT	386.74	ROUNDABOUT
R7	841669.66	1487871.62	402+15.09	0' CL	386.94	ROUNDABOUT
R8	841659.86	1487880.57	402+12.67	13.0' RT	386.88	ROUNDABOUT
R9	841647.68	1487885.80	402+06.30	24.6' RT	386.81	ROUNDABOUT
R10	841634.45	1487886.76	2004+03.75	13.2' LT	386.75	ROUNDABOUT
R11	841621.64	1487883.35	2004+04.87	0' CL	386.69	ROUNDABOUT
R12	841606.13	1487870.84	2003+98.36	18.8' RT	386.69	ROUNDABOUT
R13	841598.58	1487852.40	317+07.20	34.0' RT	386.69	ROUNDABOUT
R14	841600.87	1487832.60	316+93.34	19.4' RT	386.69	ROUNDABOUT
R15	841638.21	1487846.88	401+75.05	0' CL	387.09	CENTER

POINT	NORTHING	EASTING	STATION	OFFSET	ELEVATION	DESCRIPTION
C1	841608.76	1487761.33	316+46.11	34.3' LT	385.70	CURB PCC
C2	841623.27	1487762.36	2002+90.50	39.5' RT	385.29	CURB PCC
C3	841631.11	1487760.62	2002+86.21	32.7' RT	386.06	CURB LP
C4	841677.05	1487778.49	2002+87.44	16.6' LT	385.40	CURB LP
C5	841673.52	1487800.92	2003+09.74	20.9' LT	385.59	CURB PC
C6	841672.79	1487809.35	2003+17.92	23.0' LT	385.86	DRIVE
C7	841683.59	1487844.61	402+09.72	29.9' LT	386.52	DRIVE
C8	841687.30	1487849.39	402+15.73	28.4' LT	386.46	CURB PCC
C9	841695.94	1487859.09	402+28.80	25.8' LT	386.34	CURB LP
C10	841709.87	1487925.65	402+78.52	20.8' RT	386.30	CURB PC
C11	841708.82	1487923.06	402+76.25	19.2' RT	386.30	CURB PT
C12	841709.02	1487920.91	402+75.23	17.3' RT	386.35	CURB PT
C13	841697.43	1487918.08	402+64.25	21.5' RT	386.30	CURB PC
C14	841696.26	1487913.50	402+60.76	18.4' RT	386.38	CURB PC
C15	841652.99	1487910.95	2004+20.22	38.9' LT	386.24	CURB PCC
C16	841649.60	1487899.49	2004+10.58	31.8' LT	386.50	CURB PCC
C17	841637.57	1487903.95	2004+18.86	22.0' LT	386.42	CURB PCC
C18	841635.84	1487916.14	2004+30.84	24.5' LT	386.21	CURB PT
C19	841596.04	1487884.43	2004+14.57	23.7' RT	386.39	CURB LP
C20	841596.90	1487874.36	2004+04.80	26.3' RT	386.49	PCC
C21	841594.77	1487850.79	317+03.39	35.9' RT	386.65	DRIVE
C22	841590.90	1487839.43	316+91.92	31.4' RT	386.49	CURB PCC
C23	841577.43	1487812.55	316+62.19	23.5' RT	386.07	CURB LP

PROJECT NAME: ST. ALBANS
PROJECT NUMBER: HPP 8000(17)

FILE NAME: 57414_ROUNDABOUT.dgn
PROJECT LEADER: J. D. SALADINO
DESIGNED BY: K. A. HUBERDEAU
ROUNDABOUT GRADING PLAN

PLOT DATE: 3/4/2016
DRAWN BY: K. A. HUBERDEAU
CHECKED BY: M.J. SERVETAS
SHEET 46 OF 230

VHB 57414.00

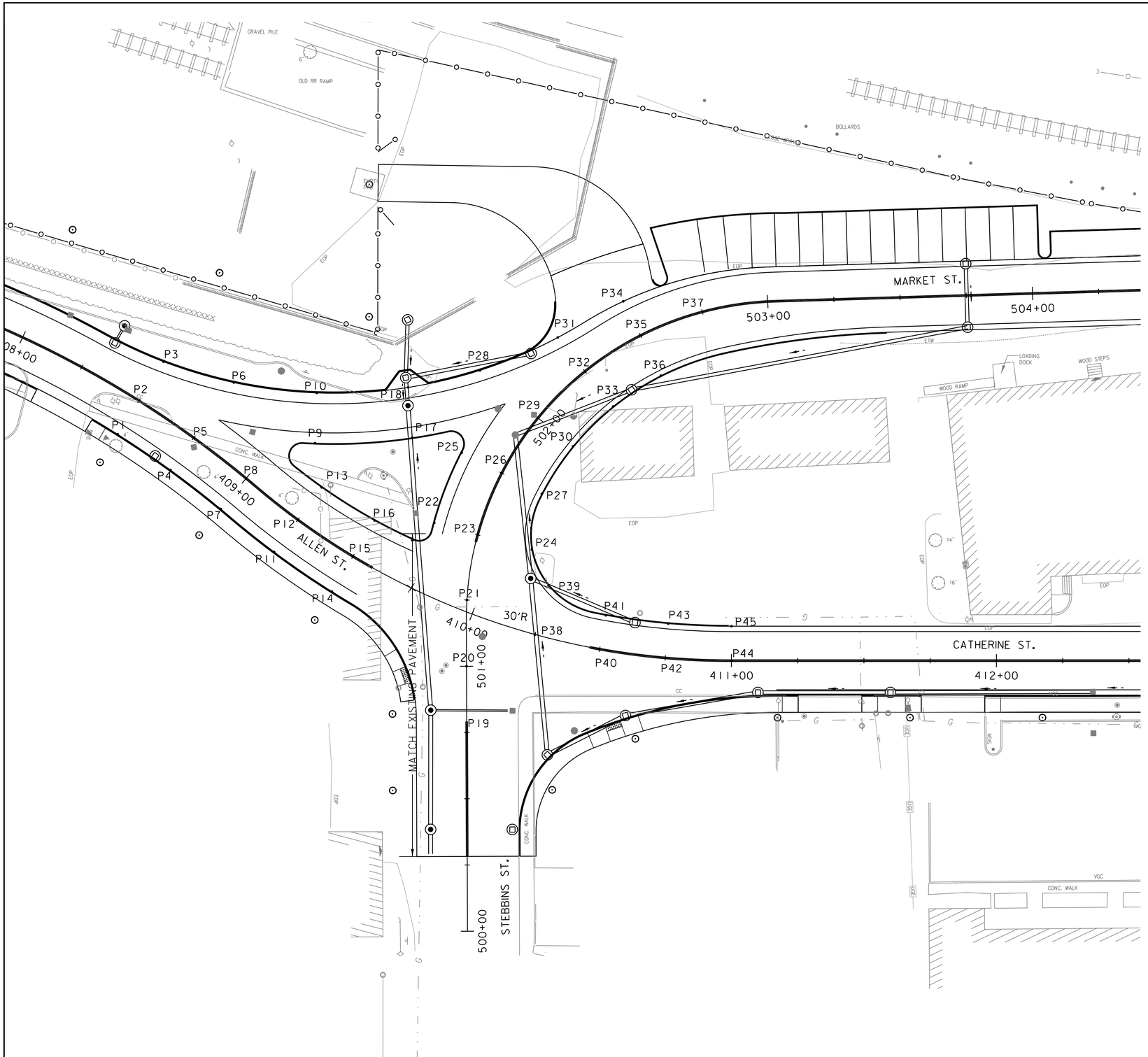

POINT	NORTHING	EASTING	STATION	OFFSET	ELEVATION
P1	842210.54	1488194.90	408+50.00	15.0' RT	385.08
P2	842220.66	1488183.83	408+50.00	0.0' CL	385.38
P3	842232.43	1488170.98	408+50.00	17.4' LT	385.04
P4	842227.74	1488211.68	408+75.00	15.0' RT	385.30
P5	842238.55	1488201.29	408+75.00	0.0' CL	385.63
P6	842257.13	1488183.44	408+75.00	25.8' LT	385.10
P7	842243.82	1488229.54	409+00.00	15.0' RT	385.55
P8	842255.28	1488219.86	409+00.00	0.0' CL	385.85
P9	842283.22	1488211.41	409+11.86	26.8' LT	385.05
P10	842287.27	1488192.85	409+00.00	41.9' LT	384.65
P11	842260.79	1488249.08	409+25.00	15.0' RT	385.70
P12	842271.72	1488238.69	409+25.00	0.0' CL	386.01
P13	842282.71	1488228.24	409+25.00	15.2' LT	385.64
P14	842279.55	1488267.63	409+50.00	15.5' LT	385.80
P15	842289.75	1488256.00	409+50.00	0.0' CL	386.10
P16	842300.18	1488244.11	409+50.00	15.8' LT	385.75
P17	842319.71	1488215.89	409+45.21	49.9' LT	384.50
P18	842321.56	1488196.93	409+30.32	64.9' LT	383.90
P19	842320.20	1488329.01	500+75.00	0.0' CL	386.61
P20	842324.55	1488304.39	501+00.00	0.0' CL	386.12
P21	842329.13	1488279.82	501+25.00	0.0' CL	385.71
P22	842322.19	1488248.97	501+50.00	17.0' LT	385.05
P23	842337.52	1488256.31	501+50.00	0.0' CL	385.38
P24	842356.63	1488265.47	501+50.00	21.2' RT	384.95
P25	842337.10	1488224.70	501+75.00	17.0' LT	384.75
P26	842350.58	1488235.05	501+75.00	0.0' CL	385.15
P27	842364.06	1488245.41	501+75.00	17.0' RT	384.72
P28	842349.34	1488195.41	502+00.00	28.4' LT	384.20
P29	842367.76	1488216.95	502+00.00	0.0' CL	385.00
P30	842378.81	1488229.88	502+00.00	17.0 RT	384.52
P31	842380.47	1488188.41	502+25.00	16.4' LT	384.42
P32	842388.31	1488202.80	502+25.00	0.0' CL	384.93
P33	842396.45	1488217.73	502+25.00	17.0' RT	384.30
P34	842407.21	1488179.36	502+50.00	14.5 LT	384.60
P35	842411.35	1488193.20	502+50.00	0.0' CL	384.95
P36	842416.22	1488209.49	502+50.00	17.0' RT	384.30
P37	842435.87	1488188.58	502+75.00	0.0' CL	385.05
P38	842352.14	1488297.20	410+25.00	0.0' CL	385.72
P39	842360.42	1488279.94	410+25.00	19.2' LT	384.95
P40	842375.14	1488306.97	410+50.00	0.0' CL	385.94
P41	842379.67	1488294.79	410+50.00	13.0' LT	385.68
P42	842398.93	1488314.62	410+75.00	0.0' CL	385.90
P43	842402.34	1488302.07	410+75.00	13.0' LT	385.50
P44	842423.32	1488320.07	411+00.00	0.0' CL	386.20
P45	842425.63	1488307.27	411+00.00	13.0' LT	385.94

PROJECT NAME: ST. ALBANS
PROJECT NUMBER: HPP 8000(17)

FILE NAME: 57414_GRADING_ALLENMARKET.dgn
PROJECT LEADER: J.D. SALADINO
DESIGNED BY: G.A. GOMEZ
INTERSECTION GRADING PLAN

PLOT DATE: 3/4/2016
DRAWN BY: G.A. GOMEZ
CHECKED BY: M.J. SERVETAS
SHEET 47 OF 230

VHB 57414.00

These symbols are not on legend. Symbols must be added to legend or additional legend provided or annotation for symbols used that are not on legend

LOWER NEWTON ROAD (VT 38)

802+00

803+00

804+00

632+00

631+00

Approximate Exist. R.O.W.

Approximate Exist. R.O.W.

Approximate Exist. R.O.W.

FEDERAL STREET

388.5

389

390

391

392

VT STATE PLANE GRID

N

0 10 20

SCALE IN FEET

PROJECT NAME:	ST. ALBANS
PROJECT NUMBER:	HPP 8000(17)

FILE NAME: 57414_INTERSECTION-GRADING.dgn	PLOT DATE: 3/4/2016
PROJECT LEADER: J. D. SALADINO	DRAWN BY: G. GOMEZ
DESIGNED BY: D. M. PECK	CHECKED BY: M.J. SERVETAS
INTERSECTION GRADING PLAN (SHEET 3 OF 4)	SHEET 48 OF 230

VHB 57414.00

Approximate Exist. R.O.W.

Approximate

VT STATE PLANE GRID

N

N. MAIN STREET (US 7)

1004+00

1003+00

1002+00

425

424

423

422

421

420

419

418

417

416

MHO

SEWER

Approximate Exist. R.O.W.

Approximate Exist. R.O.W.

LOWER NEWTON ROAD (VT 38)

What's happening with these utility poles?

0 10 20

SCALE IN FEET

PROJECT NAME:	ST. ALBANS
PROJECT NUMBER:	HPP 8000(17)

FILE NAME: 57414_INTERSECTION-GRADING.dgn	PLOT DATE: 3/4/2016
PROJECT LEADER: J. D. SALADINO	DRAWN BY: G. GOMEZ
DESIGNED BY: D. M. PECK	CHECKED BY: M.J. SERVETAS
INTERSECTION GRADING PLAN (SHEET 4 OF 4)	SHEET 49 OF 230

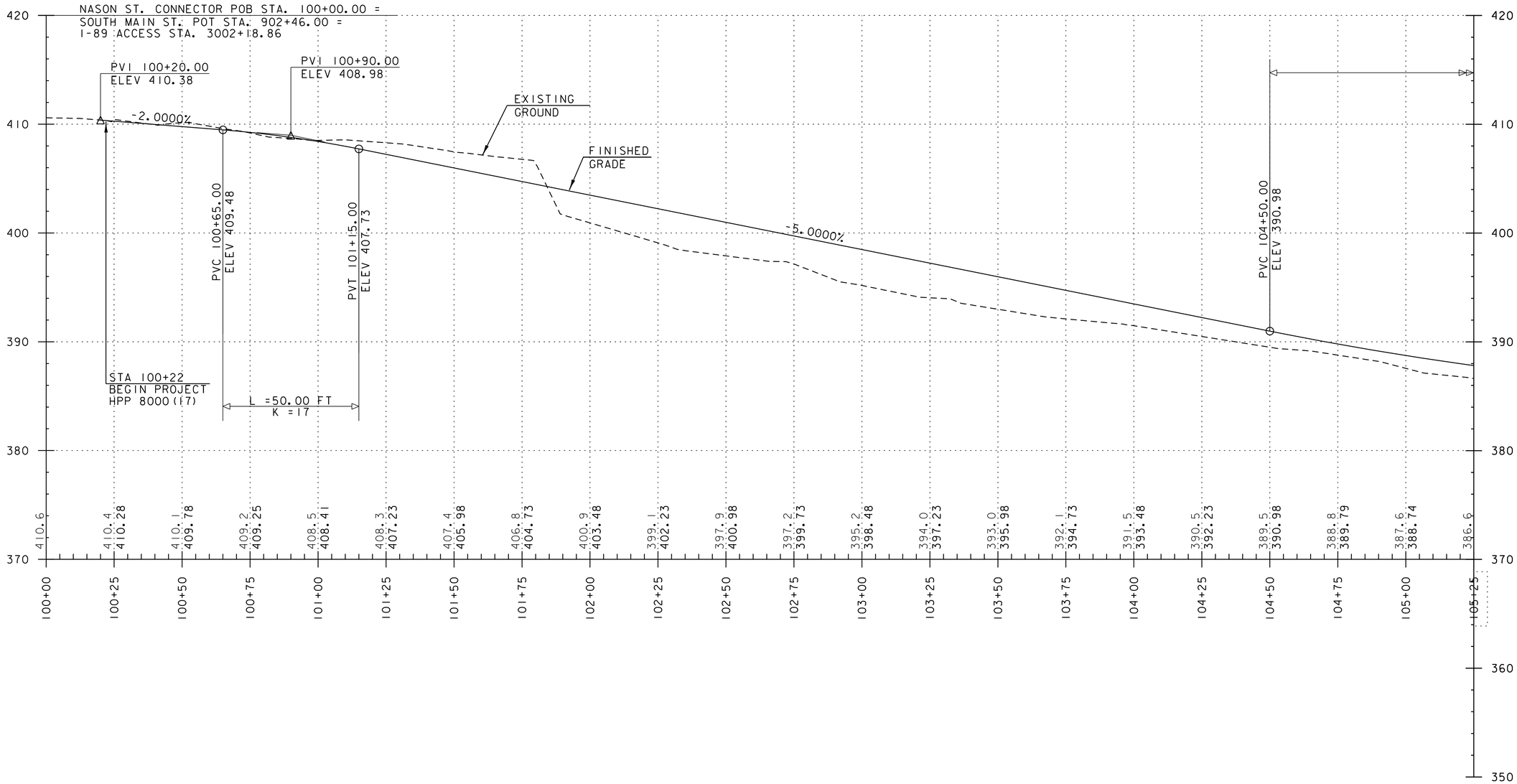

NOTE:

GRADES SHOWN TO THE NEAREST TENTH REPRESENT EXISTING GROUND ELEVATION ALONG THE CENTERLINE.
GRADES SHOWN TO THE NEAREST HUNDRETH REPRESENT FINISH GRADE ELEVATION ALONG THE CENTERLINE.

PROJECT NAME: ST. ALBANS	
PROJECT NUMBER: HPP 8000(17)	
FILE NAME: 57414_PRO.dgn	PLOT DATE: 3/4/2016
PROJECT LEADER: M.A. COLGAN	DRAWN BY: G. GOMEZ
DESIGNED BY: D.M. PECK	CHECKED BY: M.J. SERVETAS
NASON CONNECTOR PROFILE SHEET (1 OF 2)	SHEET 50 OF 230

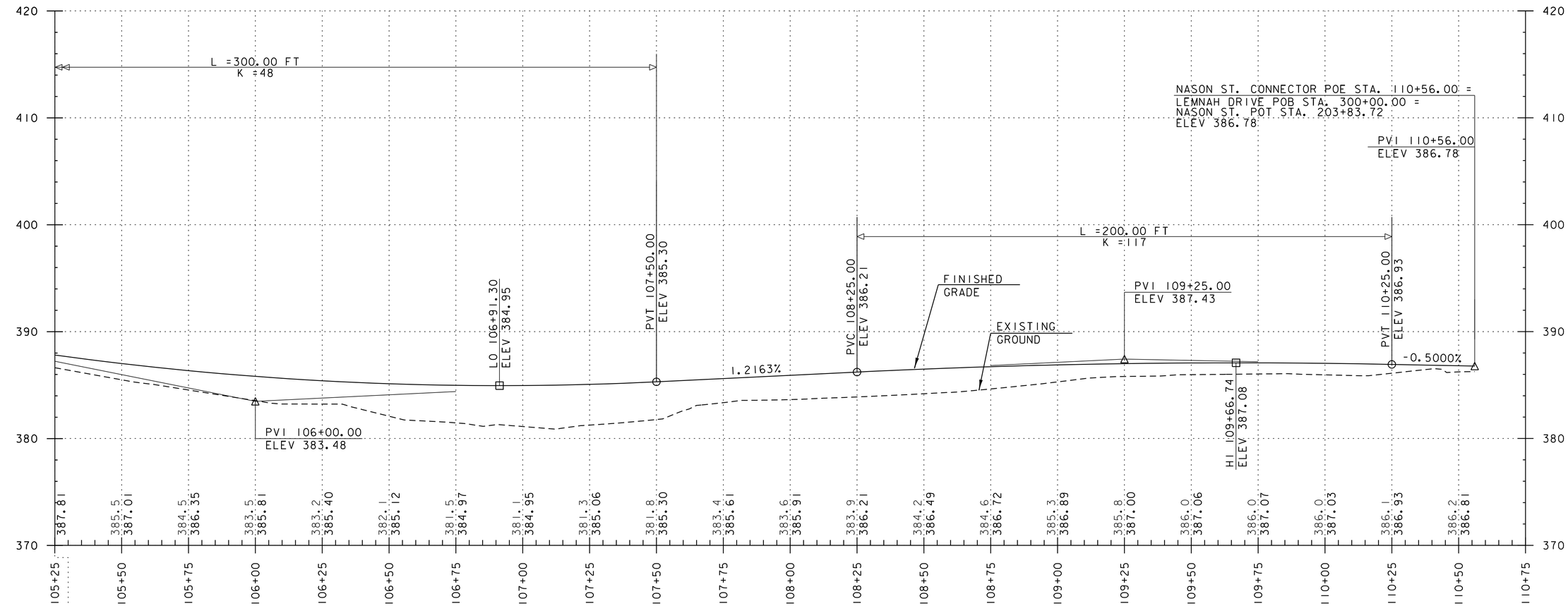

BANKING DIAGRAM

NOTE:

GRADES SHOWN TO THE NEAREST TENTH REPRESENT EXISTING GROUND ELEVATION ALONG THE CENTERLINE.
GRADES SHOWN TO THE NEAREST HUNDRETH REPRESENT FINISH GRADE ELEVATION ALONG THE CENTERLINE.

PROJECT NAME: ST. ALBANS	
PROJECT NUMBER: HPP 8000(17)	
FILE NAME: 57414_PRO.dgn	PLOT DATE: 3/4/2016
PROJECT LEADER: M.A. COLGAN	DRAWN BY: G. GOMEZ
DESIGNED BY: D.M. PECK	CHECKED BY: M.J. SERVETAS
NASON CONNECTOR PROFILE SHEET (2 OF 2)	SHEET 51 OF 230

VHB 57414.00

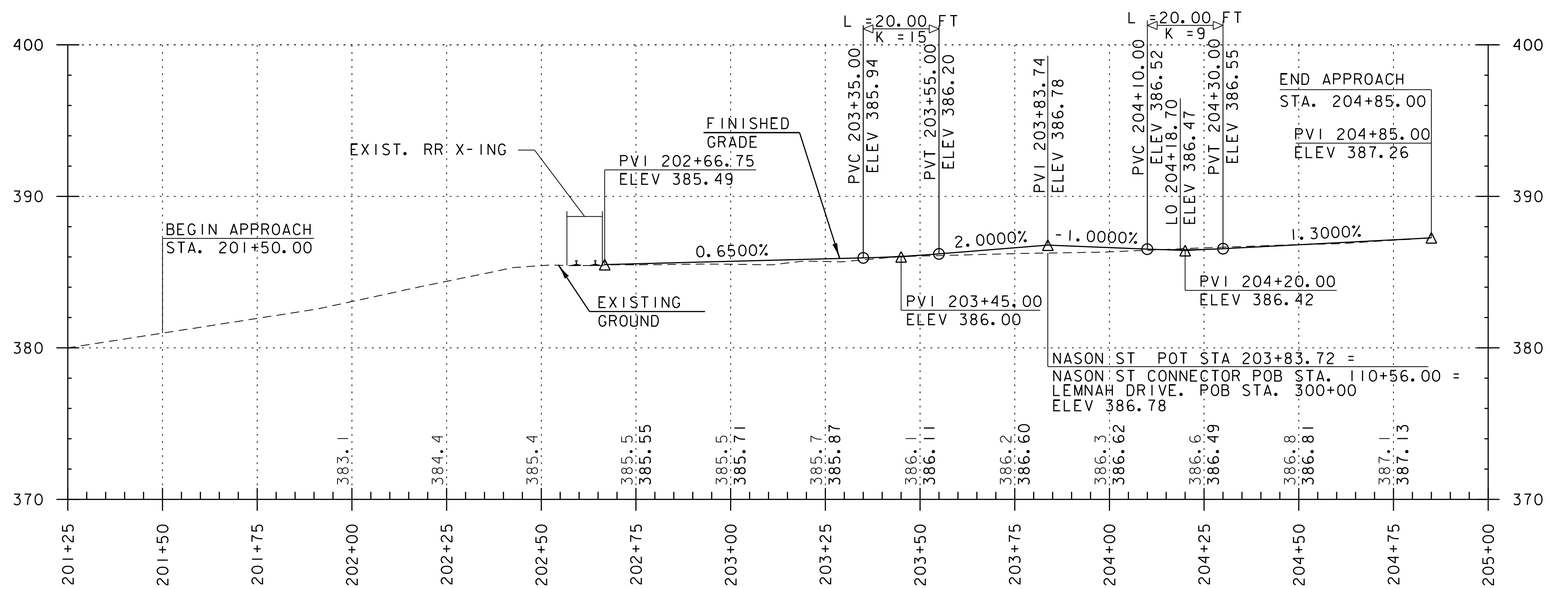

NOTE:

GRADES SHOWN TO THE NEAREST TENTH REPRESENT EXISTING GROUND ELEVATION ALONG THE CENTERLINE.
GRADES SHOWN TO THE NEAREST HUNDRETH REPRESENT FINISH GRADE ELEVATION ALONG THE CENTERLINE.

PROJECT NAME: ST. ALBANS	
PROJECT NUMBER: HPP 8000(17)	
FILE NAME: 57414_PRO.dgn	PLOT DATE: 3/4/2016
PROJECT LEADER: M.A. COLGAN	DRAWN BY: G. GOMEZ
DESIGNED BY: D.M. PECK	CHECKED BY: M.J. SERVETAS
NASON STREET PROFILE SHEET	SHEET 52 OF 230

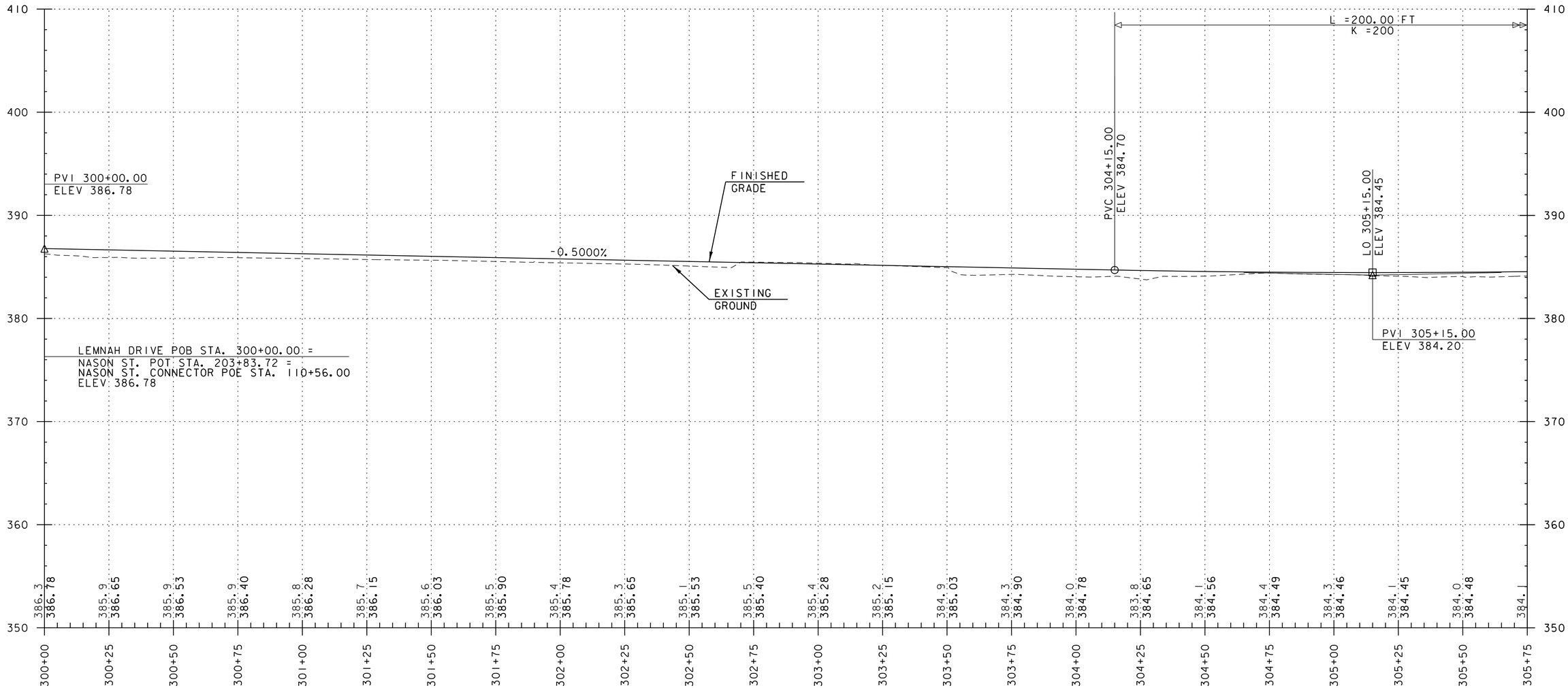

NOTE:

GRADES SHOWN TO THE NEAREST TENTH REPRESENT EXISTING GROUND ELEVATION ALONG THE CENTERLINE.
GRADES SHOWN TO THE NEAREST HUNDRETH REPRESENT FINISH GRADE ELEVATION ALONG THE CENTERLINE.

vhb

PROJECT NAME: ST. ALBANS	
PROJECT NUMBER: HPP 8000(17)	
FILE NAME: 57414_PRO.dgn	PLOT DATE: 3/4/2016
PROJECT LEADER: M.A. COLGAN	DRAWN BY: G. GOMEZ
DESIGNED BY: D.M. PECK	CHECKED BY: M.J. SERVETAS
LEMNAH DRIVE PROFILE SHEET (1 OF 3)	SHEET 53 OF 230

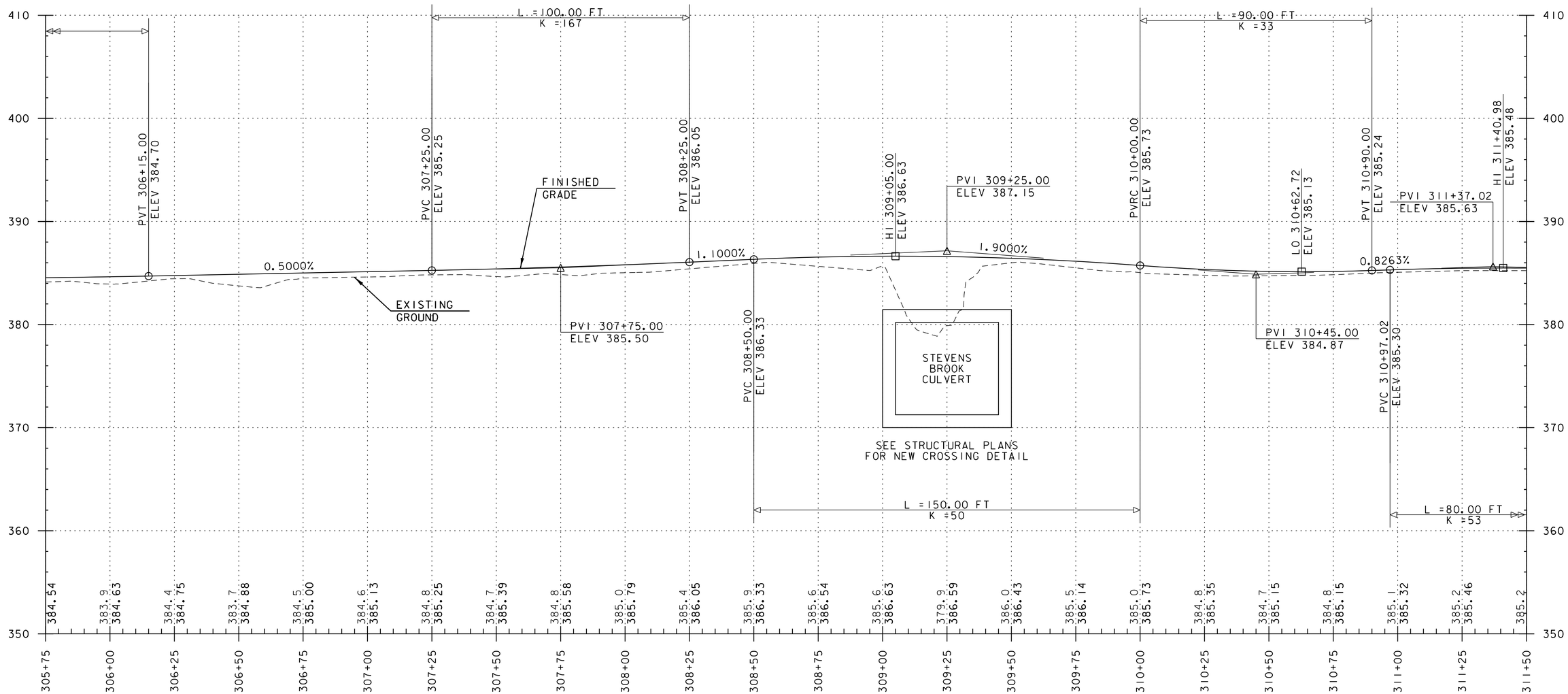

NOTE:

GRADES SHOWN TO THE NEAREST TENTH REPRESENT EXISTING GROUND ELEVATION ALONG THE CENTERLINE.
GRADES SHOWN TO THE NEAREST HUNDRETH REPRESENT FINISH GRADE ELEVATION ALONG THE CENTERLINE.

PROJECT NAME: ST. ALBANS	
PROJECT NUMBER: HPP 8000(17)	
FILE NAME: 57414_PRO.dgn	PLOT DATE: 3/4/2016
PROJECT LEADER: M.A. COLGAN	DRAWN BY: G. GOMEZ
DESIGNED BY: D.M. PECK	CHECKED BY: M.J. SERVETAS
LEMNAH DRIVE PROFILE SHEET (2 OF 3)	SHEET 54 OF 230

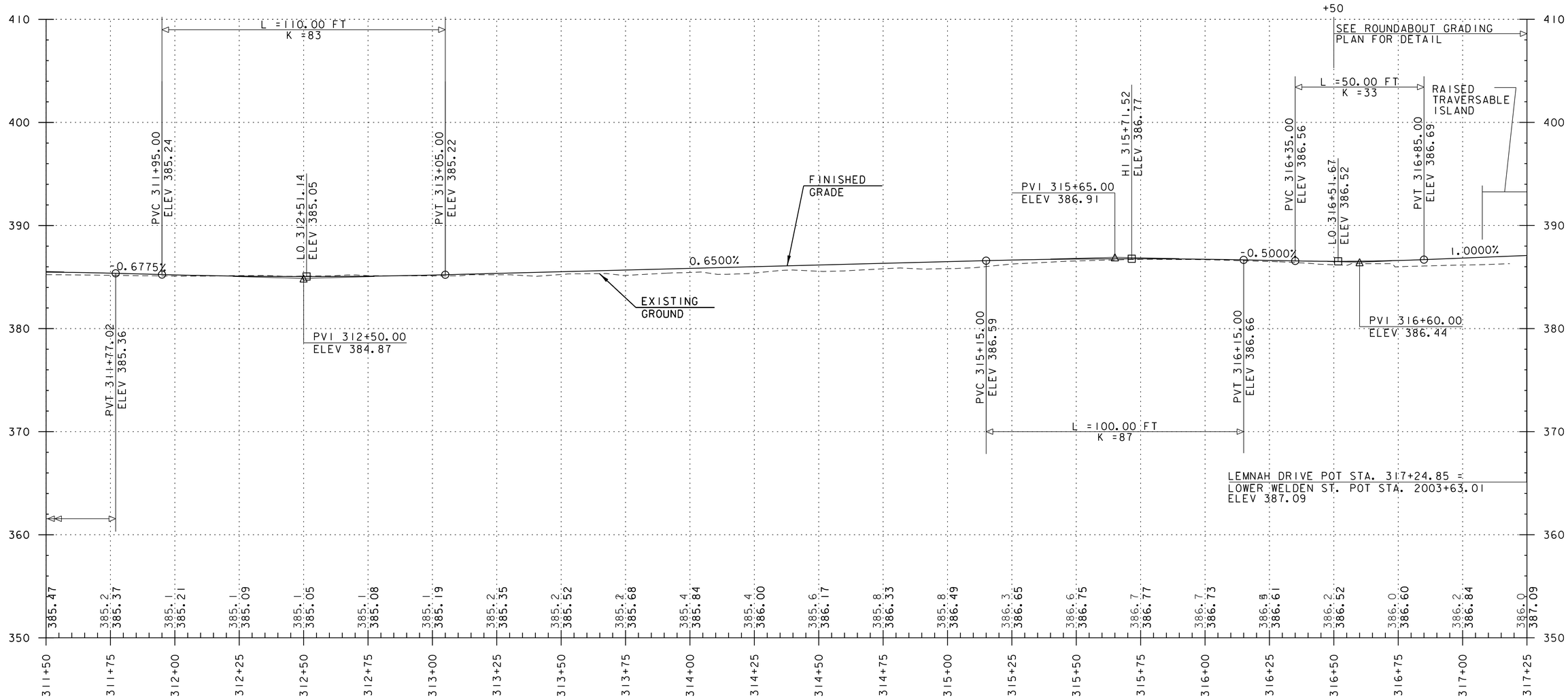

NOTE:

GRADES SHOWN TO THE NEAREST TENTH REPRESENT EXISTING GROUND ELEVATION ALONG THE CENTERLINE.
GRADES SHOWN TO THE NEAREST HUNDRETH REPRESENT FINISH GRADE ELEVATION ALONG THE CENTERLINE.

PROJECT NAME: ST. ALBANS	
PROJECT NUMBER: HPP 8000(17)	
FILE NAME: 57414_PRO.dgn	PLOT DATE: 3/4/2016
PROJECT LEADER: M.A. COLGAN	DRAWN BY: G. GOMEZ
DESIGNED BY: D.M. PECK	CHECKED BY: M.J. SERVETAS
LEMNAH DRIVE PROFILE SHEET (3 OF 3)	SHEET 55 OF 230

VHB 57414.00

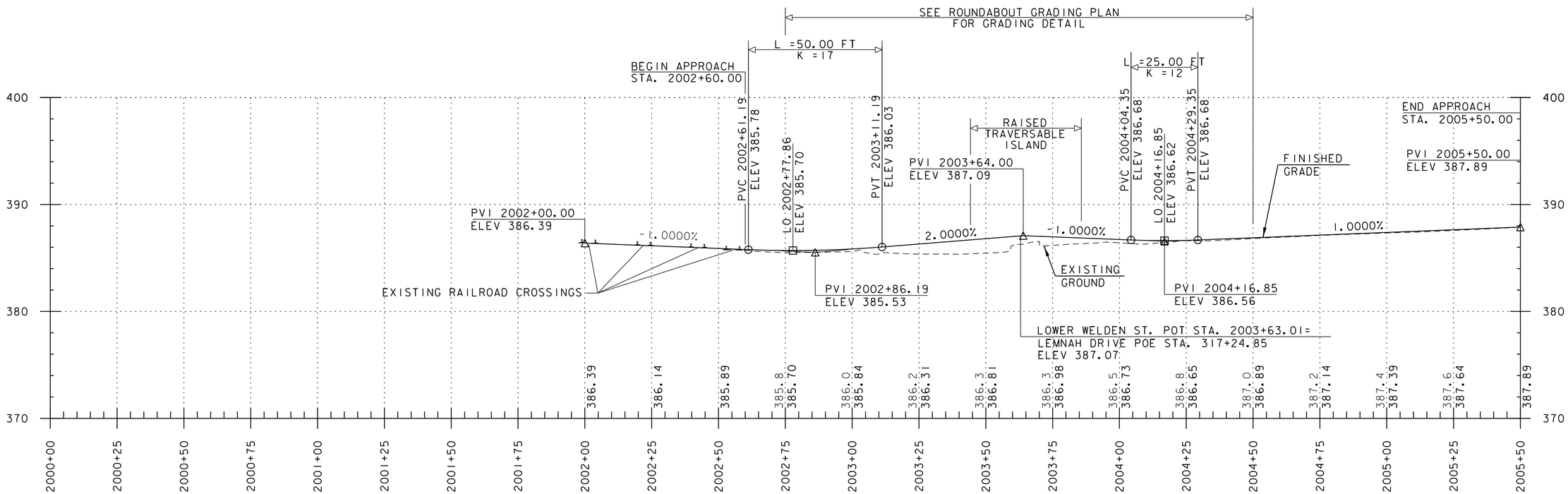

NOTE:

GRADES SHOWN TO THE NEAREST TENTH REPRESENT EXISTING GROUND ELEVATION ALONG THE CENTERLINE.
GRADES SHOWN TO THE NEAREST HUNDRETH REPRESENT FINISH GRADE ELEVATION ALONG THE CENTERLINE.

PROJECT NAME: ST. ALBANS	
PROJECT NUMBER: HPP 8000(17)	
FILE NAME: 57414_PRO.dgn	PLOT DATE: 3/4/2016
PROJECT LEADER: M.A. COLGAN	DRAWN BY: G. GOMEZ
DESIGNED BY: D.M. PECK	CHECKED BY: M.J. SERVETAS
LOWER WELDEN STREET PROFILE SHEET	SHEET 56 OF 230

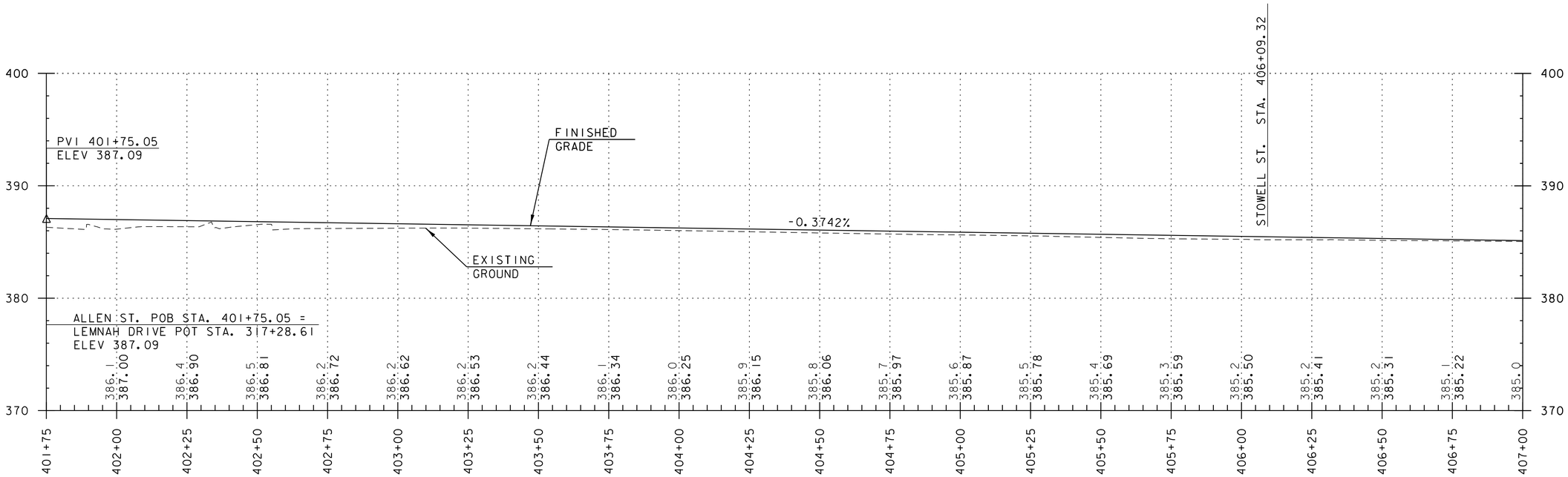

NOTE:

GRADES SHOWN TO THE NEAREST TENTH REPRESENT EXISTING GROUND ELEVATION ALONG THE CENTERLINE.
GRADES SHOWN TO THE NEAREST HUNDRETH REPRESENT FINISH GRADE ELEVATION ALONG THE CENTERLINE.

PROJECT NAME: ST. ALBANS	
PROJECT NUMBER: HPP 8000(17)	
FILE NAME: 57414_PRO.dgn	PLOT DATE: 3/4/2016
PROJECT LEADER: M.A. COLGAN	DRAWN BY: G. GOMEZ
DESIGNED BY: D.M. PECK	CHECKED BY: M.J. SERVETAS
ALLEN-CATHERINE PROFILE SHEET (1 OF 3)	SHEET 57 OF 230

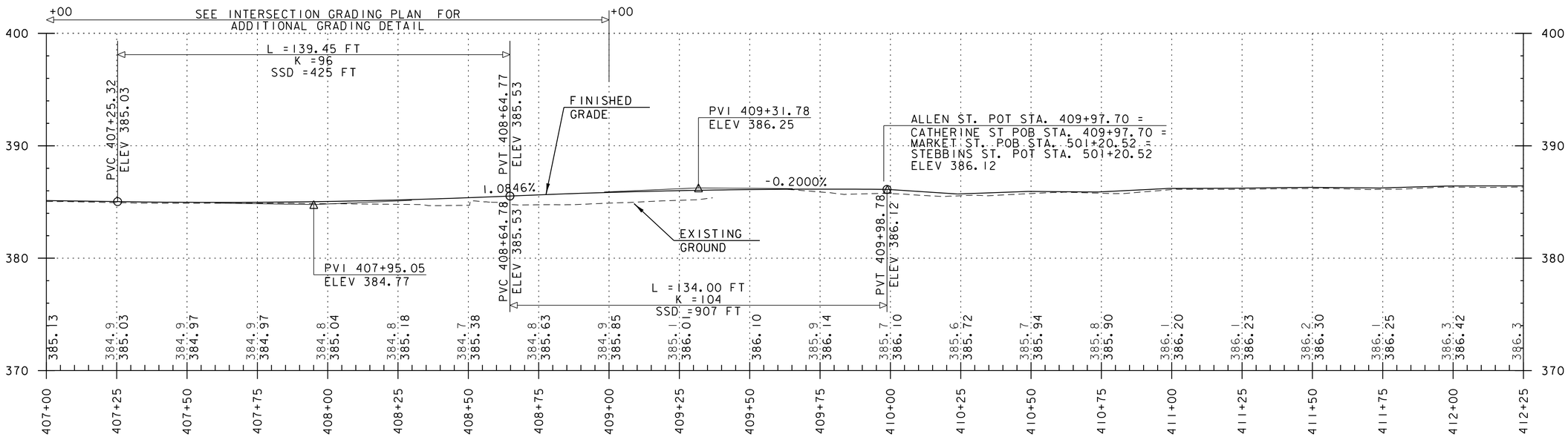

NOTE:

GRADES SHOWN TO THE NEAREST TENTH REPRESENT EXISTING GROUND ELEVATION ALONG THE CENTERLINE.
GRADES SHOWN TO THE NEAREST HUNDRETH REPRESENT FINISH GRADE ELEVATION ALONG THE CENTERLINE.

PROJECT NAME: ST. ALBANS	
PROJECT NUMBER: HPP 8000(17)	
FILE NAME: 57414_PRO.dgn	PLOT DATE: 3/4/2016
PROJECT LEADER: M.A. COLGAN	DRAWN BY: G. GOMEZ
DESIGNED BY: D.M. PECK	CHECKED BY: M.J. SERVETAS
ALLEN-CATHERINE PROFILE SHEET (2 OF 3)	SHEET 58 OF 230

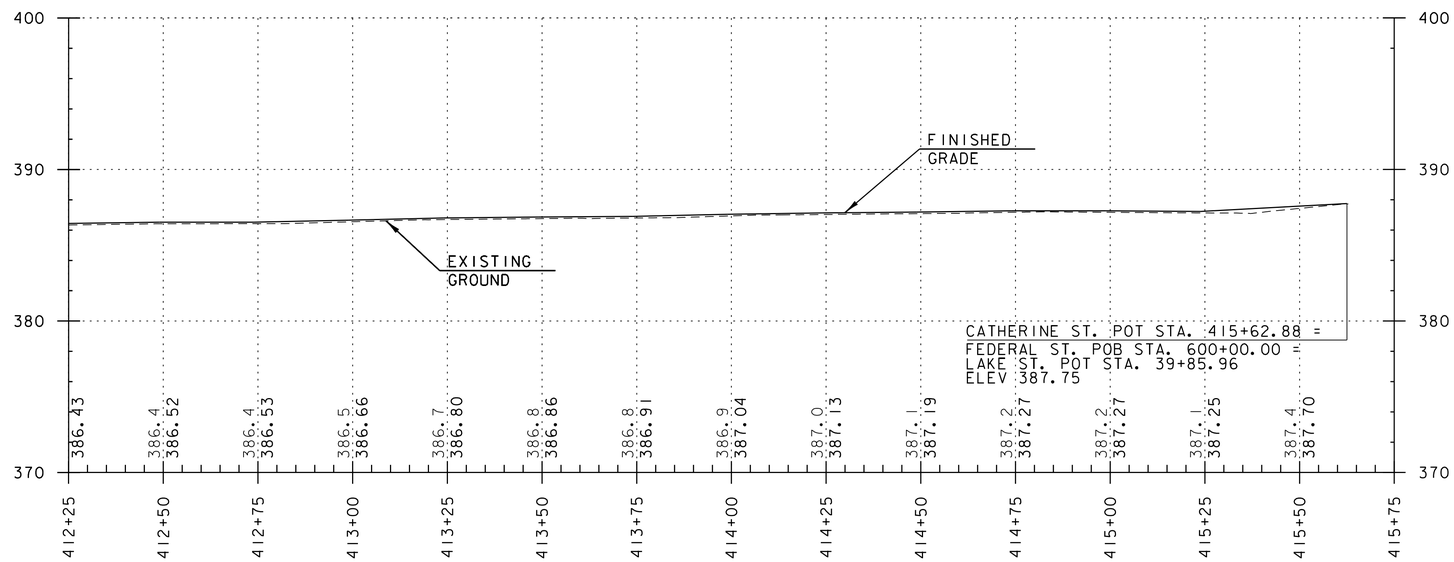

NOTE:

GRADES SHOWN TO THE NEAREST TENTH REPRESENT EXISTING GROUND ELEVATION ALONG THE CENTERLINE.
GRADES SHOWN TO THE NEAREST HUNDRETH REPRESENT FINISH GRADE ELEVATION ALONG THE CENTERLINE.

PROJECT NAME: ST. ALBANS	
PROJECT NUMBER: HPP 8000(17)	
FILE NAME: 57414_PRO.dgn	PLOT DATE: 3/4/2016
PROJECT LEADER: M.A. COLGAN	DRAWN BY: G. GOMEZ
DESIGNED BY: D.M. PECK	CHECKED BY: M.J. SERVETAS
ALLEN-CATHERINE PROFILE SHEET (3 OF 3)	SHEET 59 OF 230

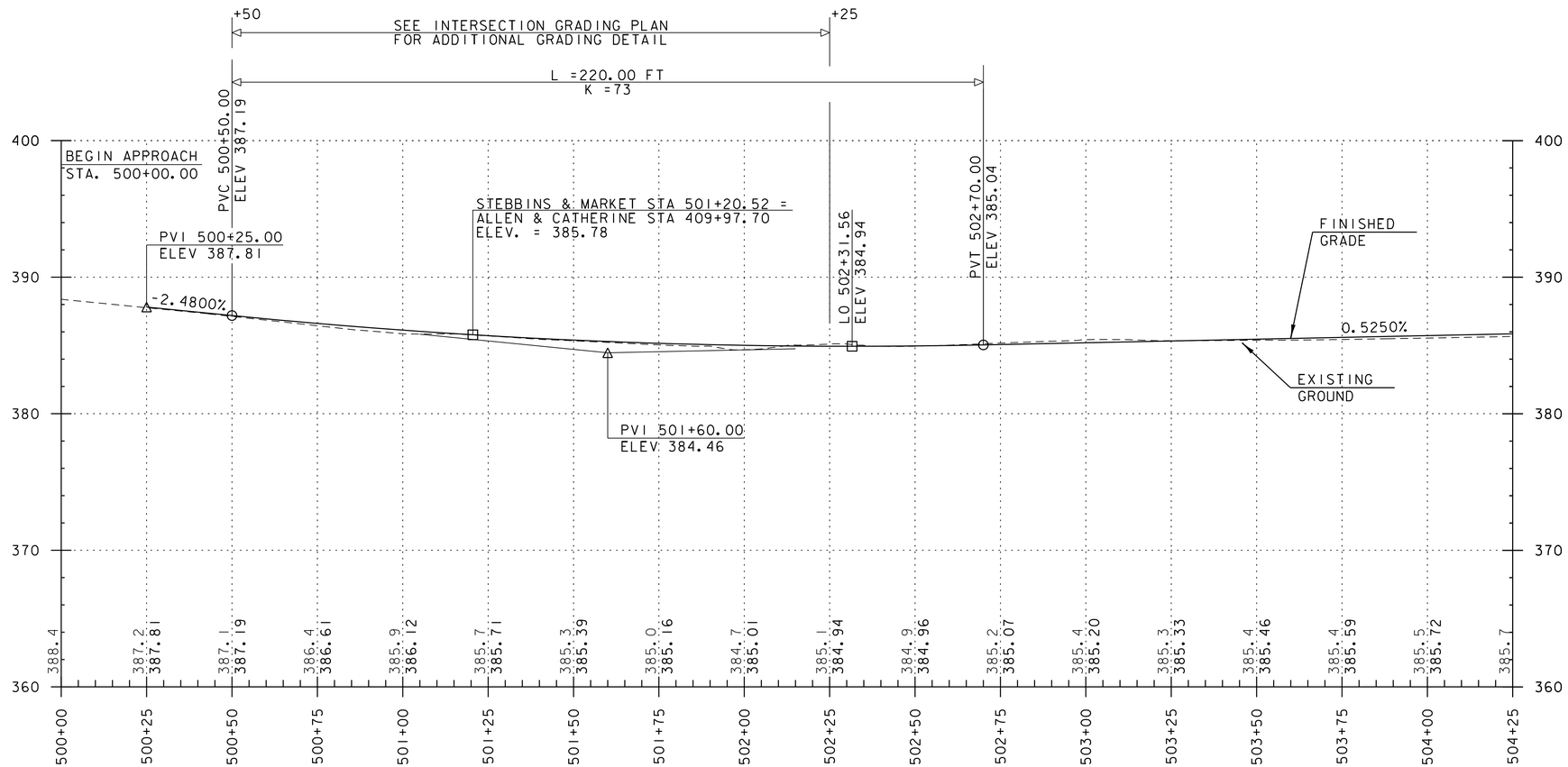

NOTE:

GRADES SHOWN TO THE NEAREST TENTH REPRESENT EXISTING GROUND ELEVATION ALONG THE CENTERLINE.
GRADES SHOWN TO THE NEAREST HUNDRETH REPRESENT FINISH GRADE ELEVATION ALONG THE CENTERLINE.

PROJECT NAME: ST. ALBANS	
PROJECT NUMBER: HPP 8000(17)	
FILE NAME: 57414_PRO.dgn	PLOT DATE: 3/4/2016
PROJECT LEADER: M.A. COLGAN	DRAWN BY: G. GOMEZ
DESIGNED BY: D.M. PECK	CHECKED BY: M.J. SERVETAS
STEBBINS-MARKET PROFILE (SHEET 1 OF 2)	SHEET 60 OF 230

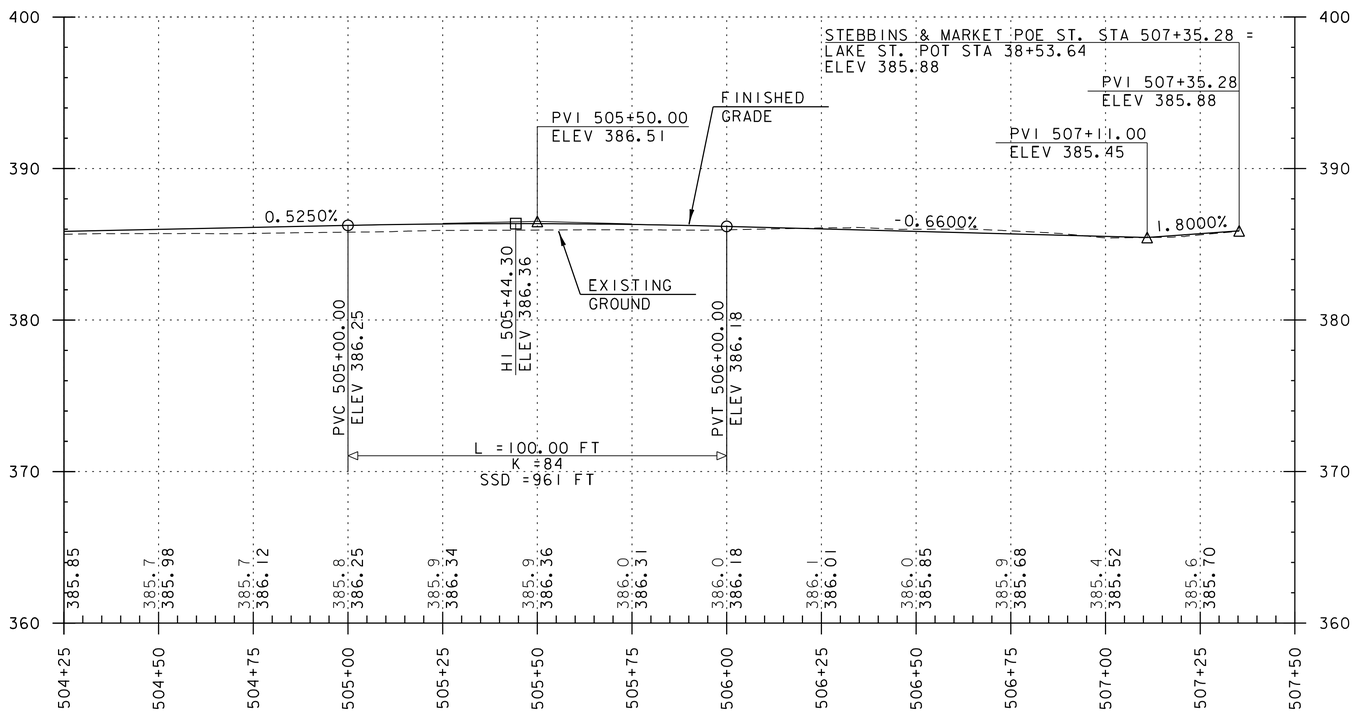

NOTE:

GRADES SHOWN TO THE NEAREST TENTH REPRESENT EXISTING GROUND ELEVATION ALONG THE CENTERLINE.
GRADES SHOWN TO THE NEAREST HUNDRETH REPRESENT FINISH GRADE ELEVATION ALONG THE CENTERLINE.

PROJECT NAME: ST. ALBANS	
PROJECT NUMBER: HPP 8000(17)	
FILE NAME: 57414_PRO.dgn	PLOT DATE: 3/4/2016
PROJECT LEADER: M.A. COLGAN	DRAWN BY: G. GOMEZ
DESIGNED BY: D.M. PECK	CHECKED BY: M.J. SERVETAS
STEBBINS-MARKET PROFILE (SHEET 2 OF 2)	SHEET 61 OF 230

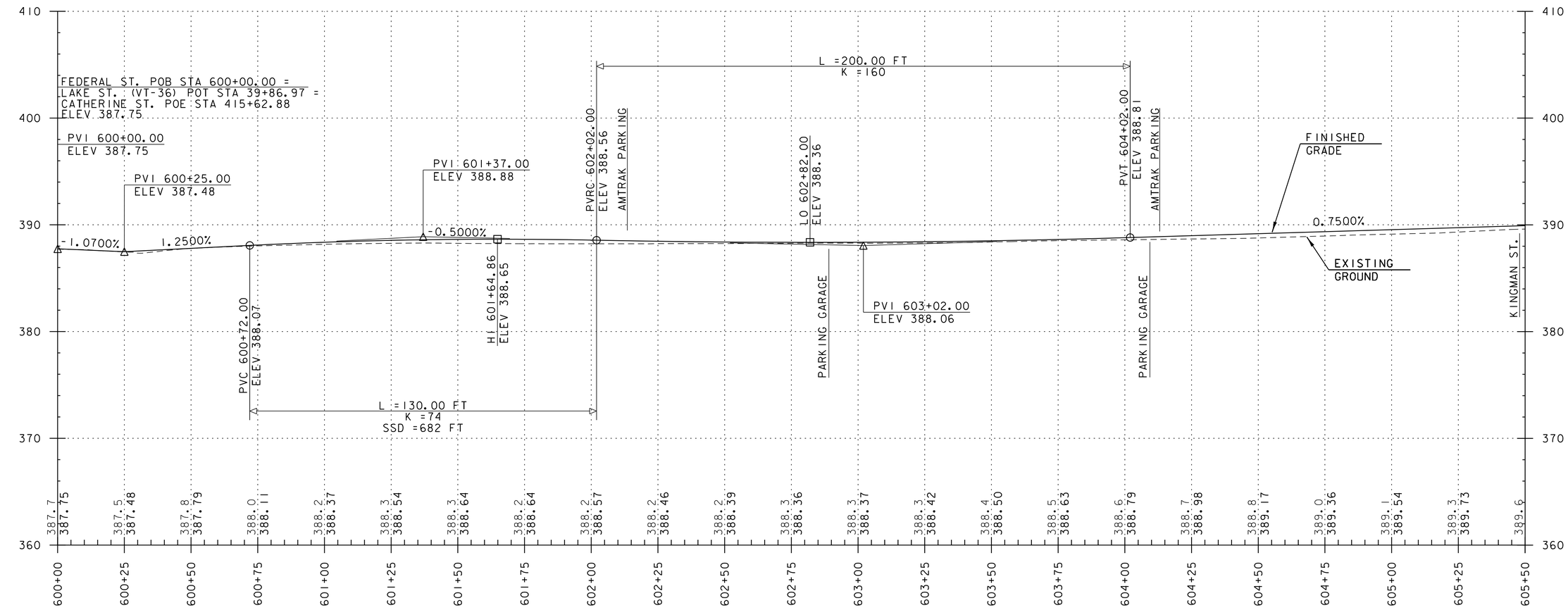

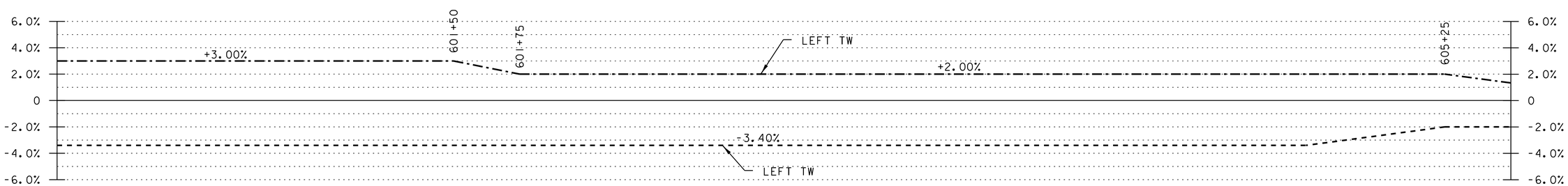

BANKING DIAGRAM

NOTE:

GRADES SHOWN TO THE NEAREST TENTH REPRESENT EXISTING GROUND ELEVATION ALONG THE CENTERLINE.
GRADES SHOWN TO THE NEAREST HUNDRETH REPRESENT FINISH GRADE ELEVATION ALONG THE CENTERLINE.

PROJECT NAME: ST. ALBANS	
PROJECT NUMBER: HPP 8000(17)	
FILE NAME: 57414_PRO.dgn	PLOT DATE: 3/4/2016
PROJECT LEADER: M.A. COLGAN	DRAWN BY: G. GOMEZ
DESIGNED BY: D.M. PECK	CHECKED BY: M.J. SERVETAS
FEDERAL STREET PROFILE (SHEET 1 OF 6)	SHEET 62 OF 230

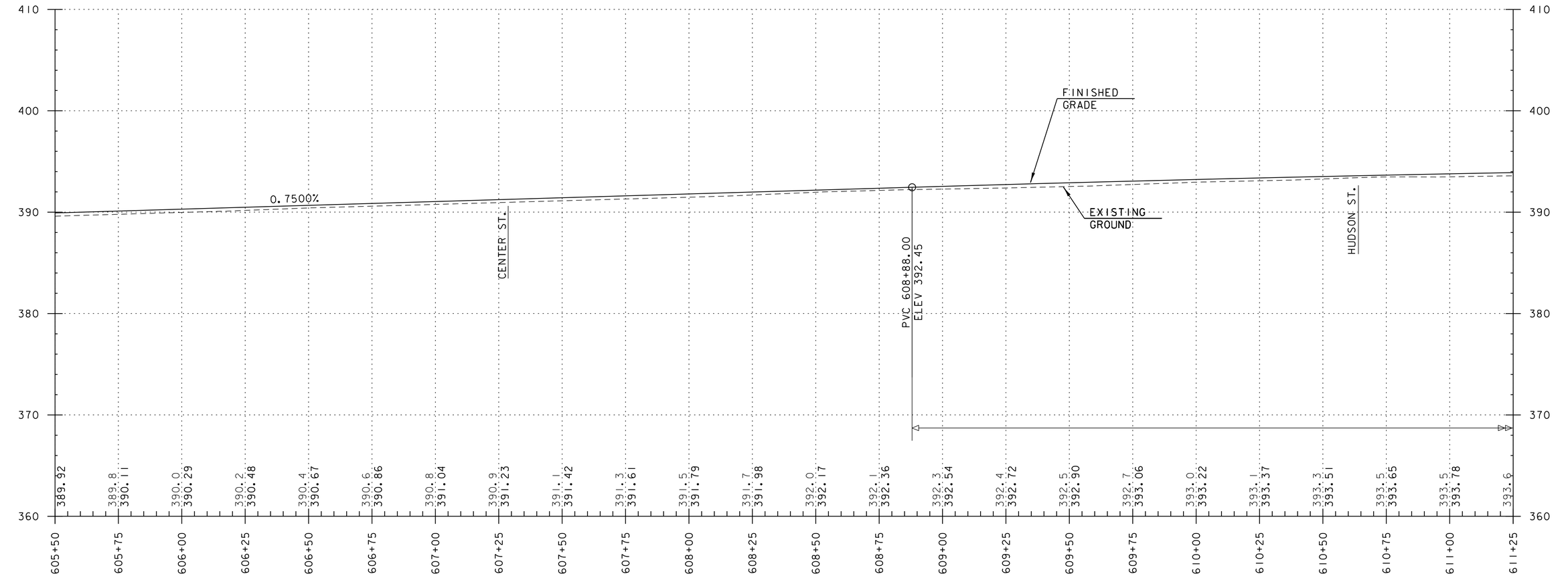

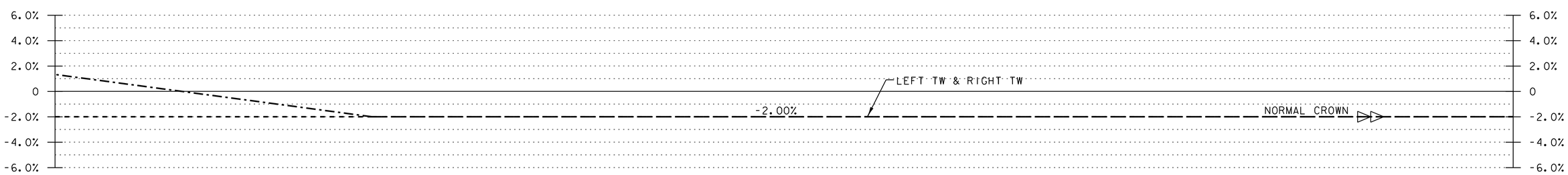

BANKING DIAGRAM

NOTE:

GRADES SHOWN TO THE NEAREST TENTH REPRESENT EXISTING GROUND ELEVATION ALONG THE CENTERLINE.
GRADES SHOWN TO THE NEAREST HUNDRETH REPRESENT FINISH GRADE ELEVATION ALONG THE CENTERLINE.

PROJECT NAME: ST. ALBANS	
PROJECT NUMBER: HPP 8000(17)	
FILE NAME: 57414_PRO.dgn	PLOT DATE: 3/4/2016
PROJECT LEADER: M.A. COLGAN	DRAWN BY: G. GOMEZ
DESIGNED BY: D.M. PECK	CHECKED BY: M.J. SERVETAS
FEDERAL STREET PROFILE (SHEET 2 OF 6)	SHEET 63 OF 230

VHB 57414.00

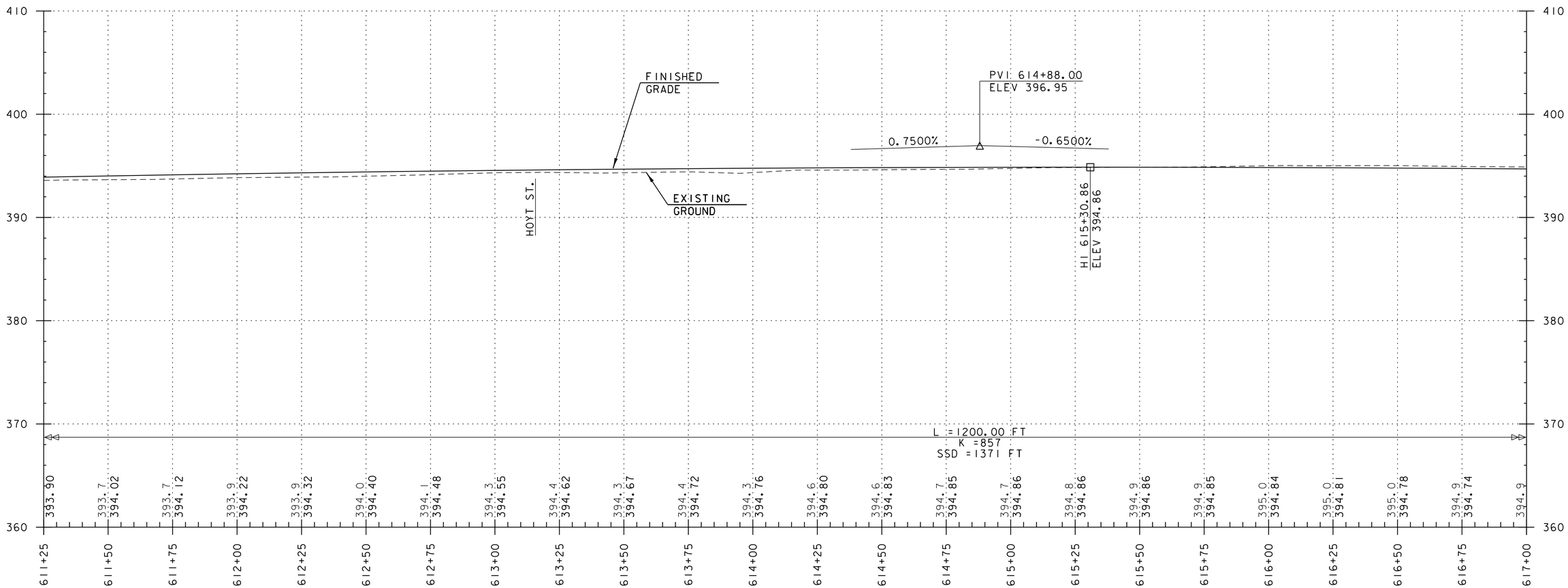

NOTE:

GRADES SHOWN TO THE NEAREST TENTH REPRESENT EXISTING GROUND ELEVATION ALONG THE CENTERLINE.
GRADES SHOWN TO THE NEAREST HUNDRETH REPRESENT FINISH GRADE ELEVATION ALONG THE CENTERLINE.

PROJECT NAME: ST. ALBANS	
PROJECT NUMBER: HPP 8000(17)	
FILE NAME: 57414_PRO.dgn	PLOT DATE: 3/4/2016
PROJECT LEADER: M.A. COLGAN	DRAWN BY: G. GOMEZ
DESIGNED BY: D.M. PECK	CHECKED BY: M.J. SERVETAS
FEDERAL STREET PROFILE (SHEET 3 OF 6)	SHEET 64 OF 230

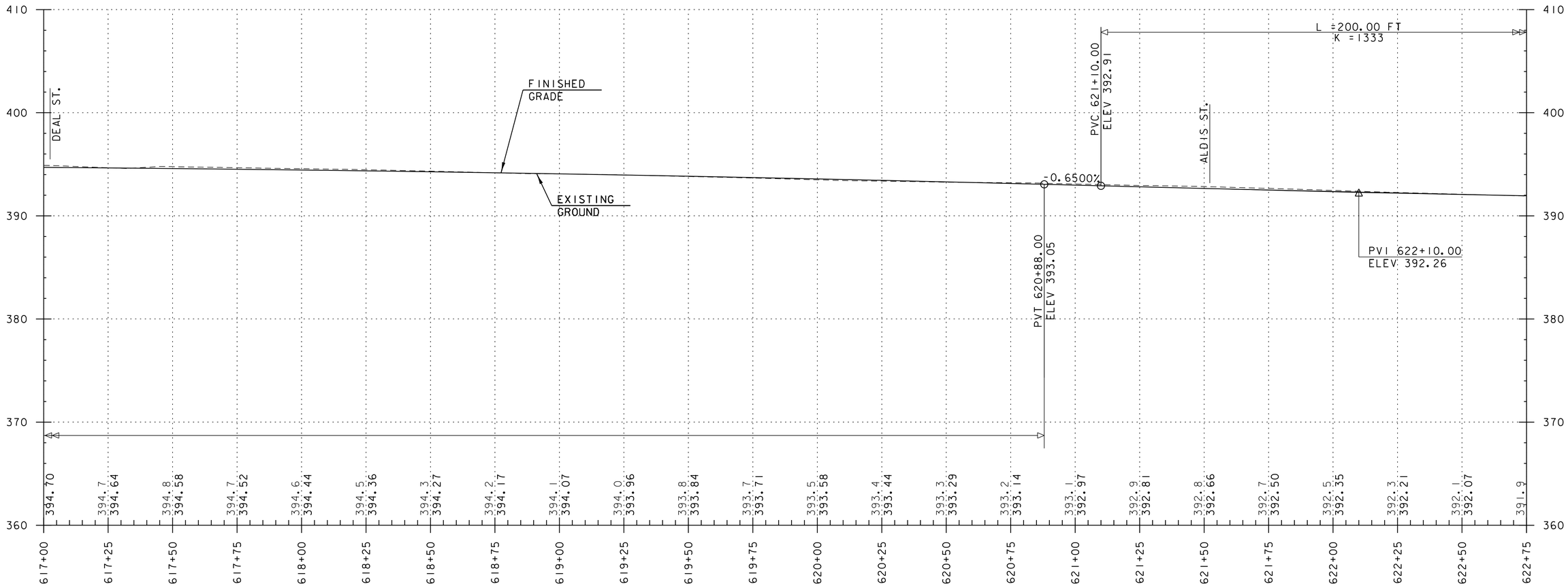

NOTE:

GRADES SHOWN TO THE NEAREST TENTH REPRESENT EXISTING GROUND ELEVATION ALONG THE CENTERLINE.
GRADES SHOWN TO THE NEAREST HUNDRETH REPRESENT FINISH GRADE ELEVATION ALONG THE CENTERLINE.

PROJECT NAME: ST. ALBANS	
PROJECT NUMBER: HPP 8000(17)	
FILE NAME: 57414_PRO.dgn	PLOT DATE: 3/4/2016
PROJECT LEADER: M.A. COLGAN	DRAWN BY: G. GOMEZ
DESIGNED BY: D.M. PECK	CHECKED BY: M.J. SERVETAS
FEDERAL STREET PROFILE (SHEET 4 OF 6)	SHEET 65 OF 230

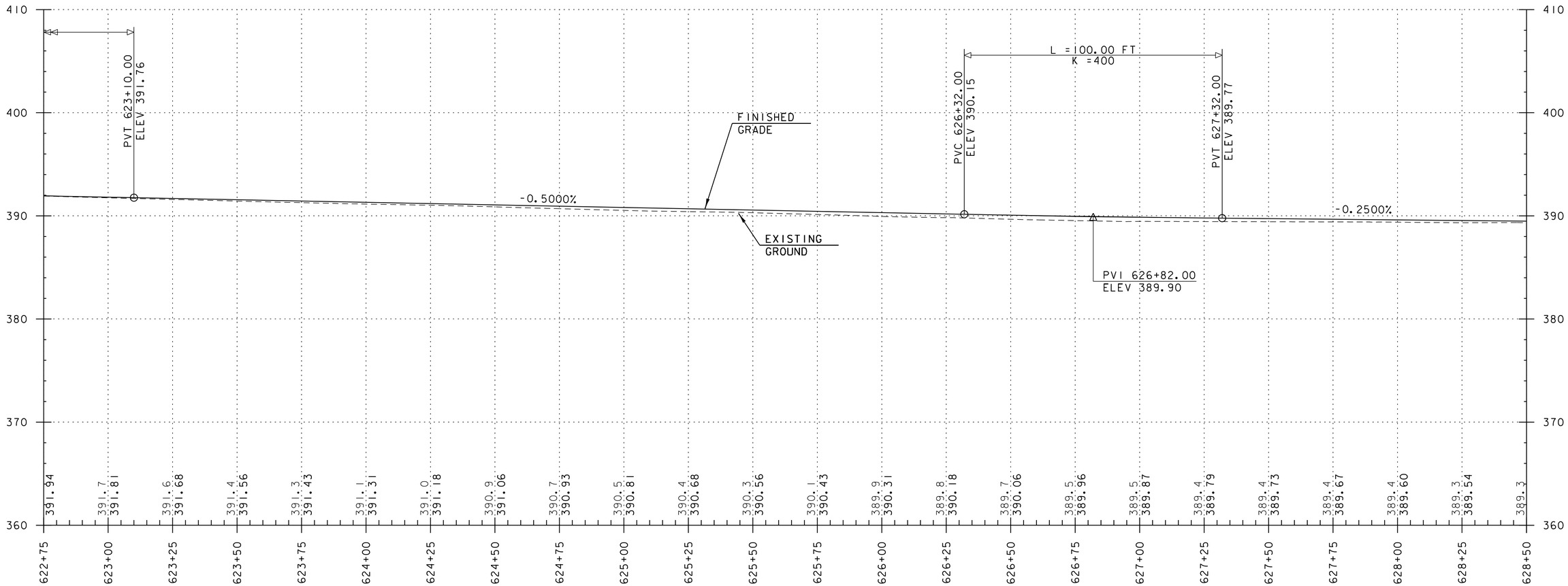

NOTE:

GRADES SHOWN TO THE NEAREST TENTH REPRESENT EXISTING GROUND ELEVATION ALONG THE CENTERLINE.
GRADES SHOWN TO THE NEAREST HUNDRETH REPRESENT FINISH GRADE ELEVATION ALONG THE CENTERLINE.

vhb

PROJECT NAME: ST. ALBANS	
PROJECT NUMBER: HPP 8000(17)	
FILE NAME: 57414_PRO.dgn	PLOT DATE: 3/4/2016
PROJECT LEADER: M.A. COLGAN	DRAWN BY: G. GOMEZ
DESIGNED BY: D.M. PECK	CHECKED BY: M.J. SERVETAS
FEDERAL STREET PROFILE (SHEET 5 OF 6)	SHEET 66 OF 230

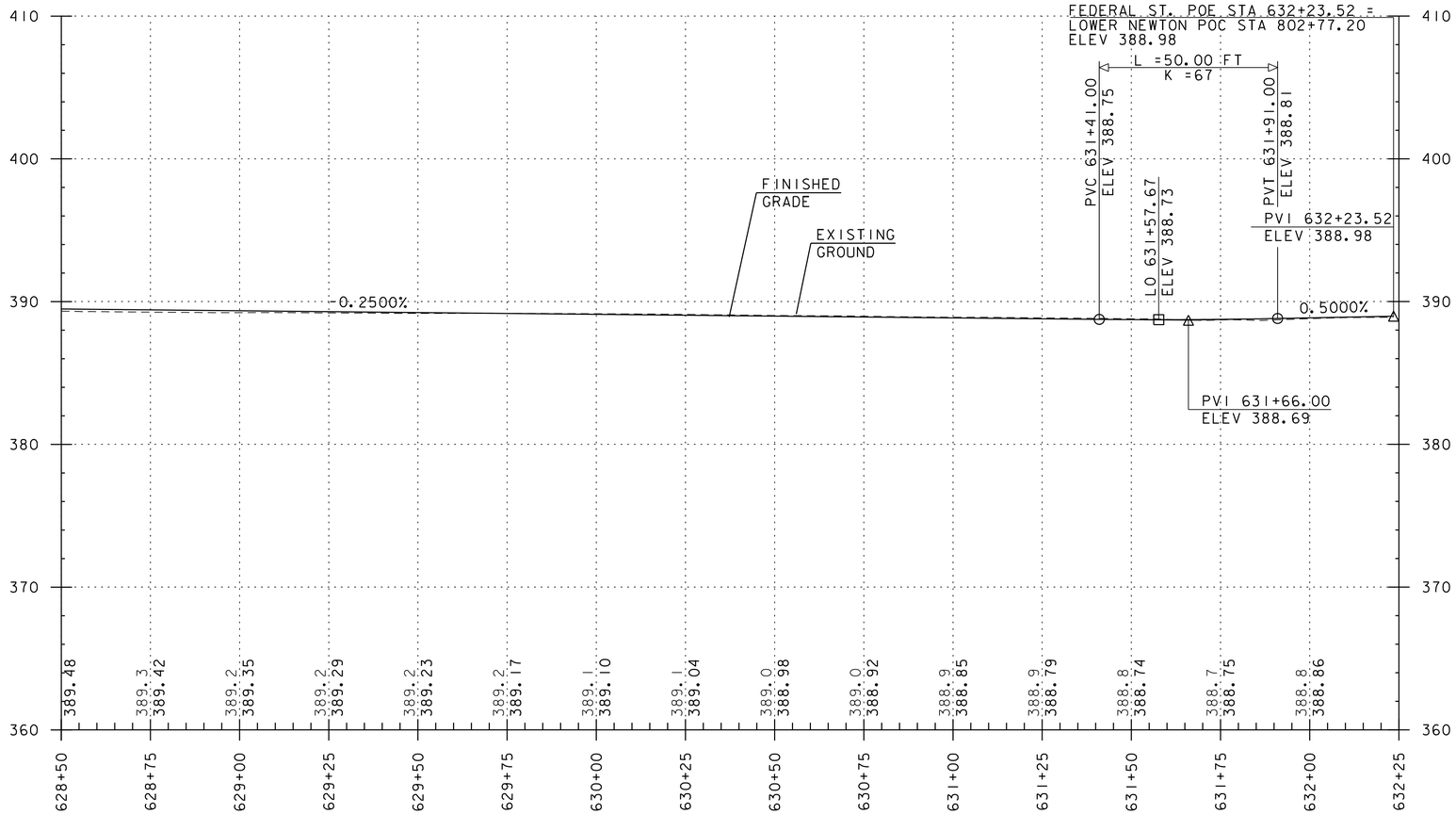

NOTE:

GRADES SHOWN TO THE NEAREST TENTH REPRESENT EXISTING GROUND ELEVATION ALONG THE CENTERLINE.
GRADES SHOWN TO THE NEAREST HUNDRETH REPRESENT FINISH GRADE ELEVATION ALONG THE CENTERLINE.

PROJECT NAME: ST. ALBANS	
PROJECT NUMBER: HPP 8000(17)	
FILE NAME: 57414_PRO.dgn	PLOT DATE: 3/4/2016
PROJECT LEADER: M.A. COLGAN	DRAWN BY: G. GOMEZ
DESIGNED BY: D.M. PECK	CHECKED BY: M.J. SERVETAS
FEDERAL STREET PROFILE (SHEET 6 OF 6)	SHEET 67 OF 230

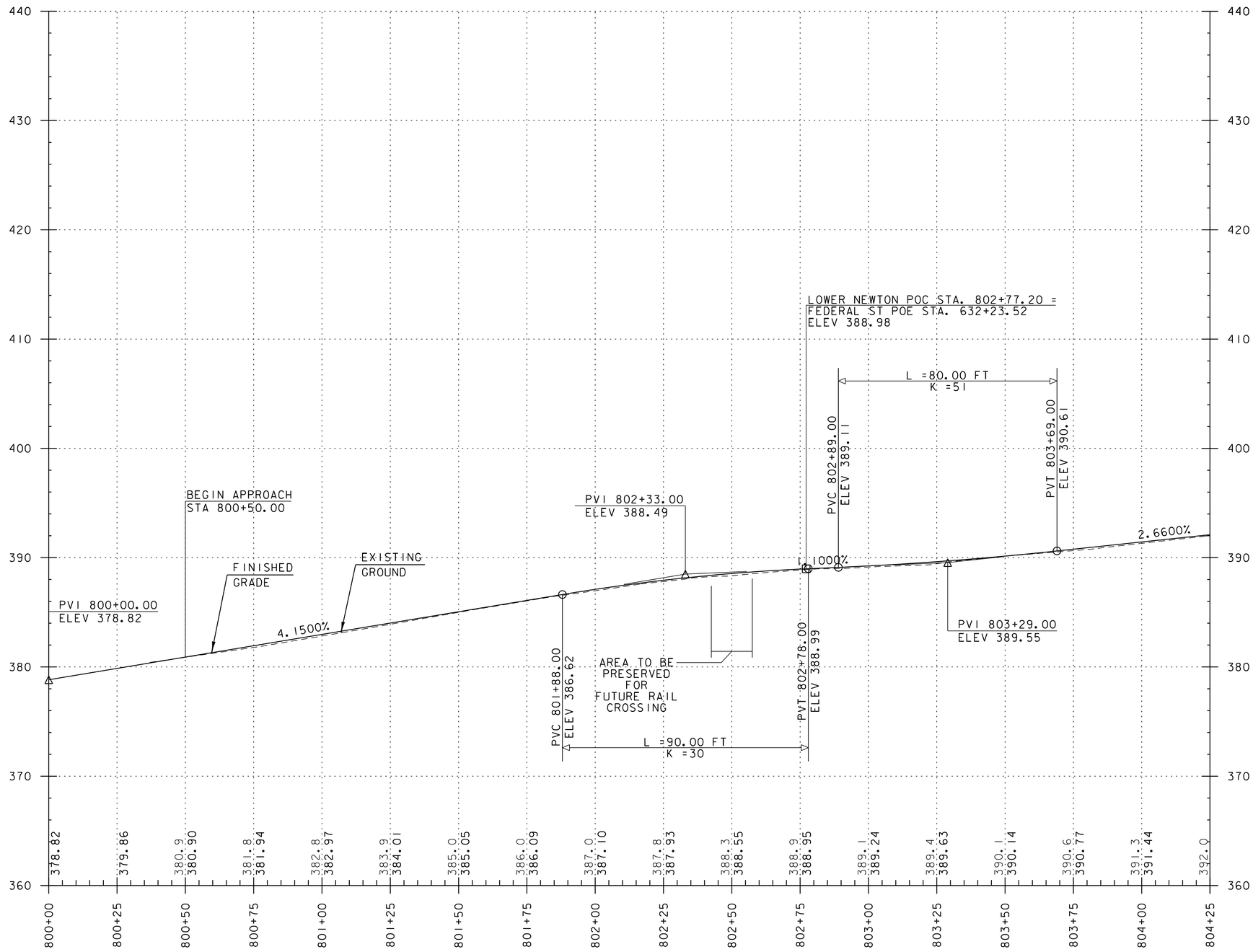

NOTE:

GRADES SHOWN TO THE NEAREST TENTH REPRESENT EXISTING GROUND ELEVATION ALONG THE CENTERLINE.
GRADES SHOWN TO THE NEAREST HUNDRETH REPRESENT FINISH GRADE ELEVATION ALONG THE CENTERLINE.

vhb

PROJECT NAME: ST. ALBANS	
PROJECT NUMBER: HPP 8000(17)	
FILE NAME: 57414_PRO.dgn	PLOT DATE: 3/4/2016
PROJECT LEADER: M.A. COLGAN	DRAWN BY: G. GOMEZ
DESIGNED BY: D.M. PECK	CHECKED BY: M.J. SERVETAS
LOWER NEWTON PROFILE (SHEET 1 OF 2)	SHEET 68 OF 230

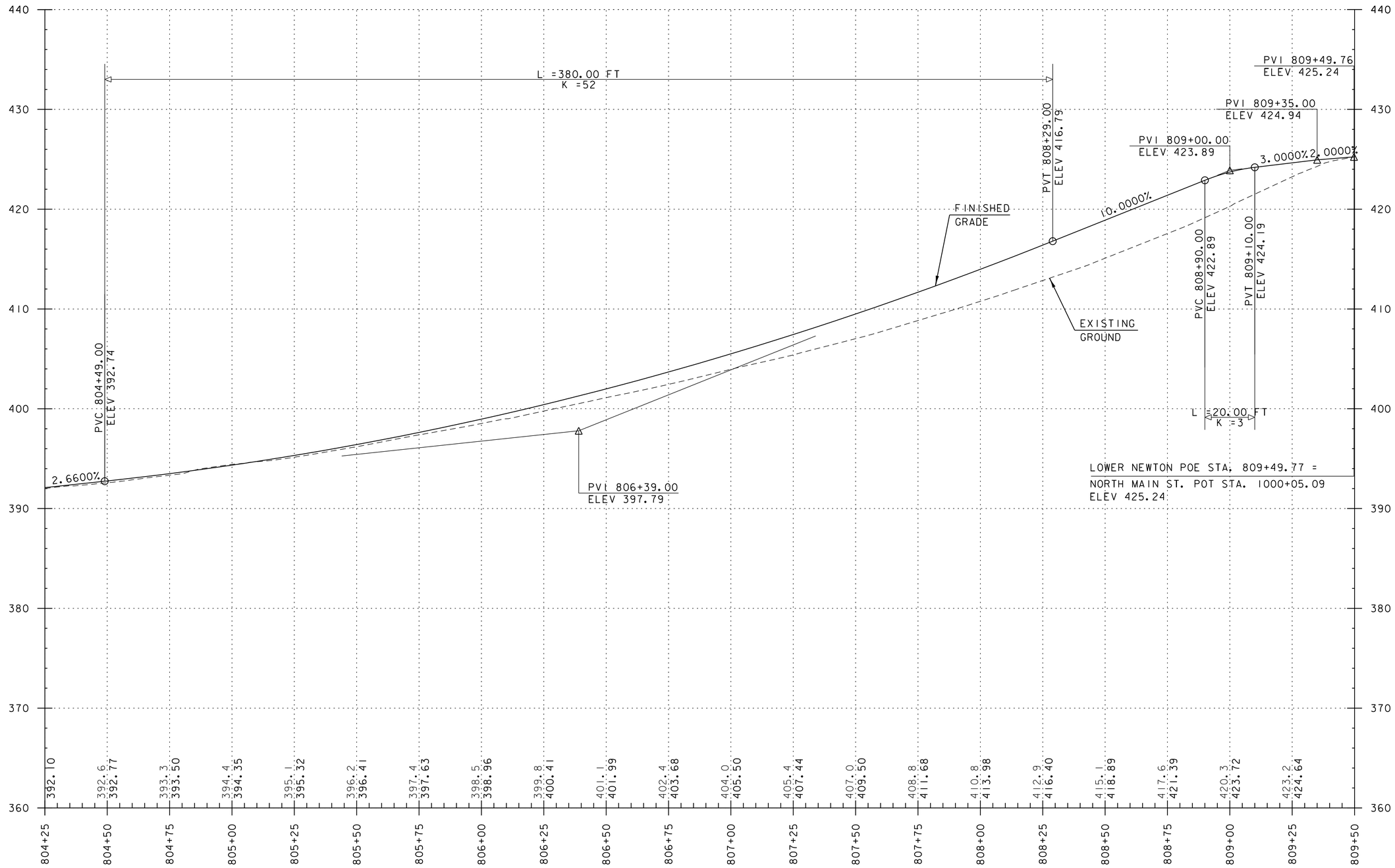

NOTE:

GRADES SHOWN TO THE NEAREST TENTH REPRESENT EXISTING GROUND ELEVATION ALONG THE CENTERLINE.
GRADES SHOWN TO THE NEAREST HUNDRETH REPRESENT FINISH GRADE ELEVATION ALONG THE CENTERLINE.

vhb

PROJECT NAME: ST. ALBANS	
PROJECT NUMBER: HPP 8000(17)	
FILE NAME: 57414_PRO.dgn	PLOT DATE: 3/4/2016
PROJECT LEADER: M.A. COLGAN	DRAWN BY: G. GOMEZ
DESIGNED BY: D.M. PECK	CHECKED BY: M.J. SERVETAS
LOWER NEWTON PROFILE (SHEET 1 OF 2)	SHEET 69 OF 230

100 STA 902+25 36.8 RT TO STA 902+34 36.4 RT
CONST. 7 LF X 15" RCP, CLASS III
CONST. CB + 34, 36.4' RT ALONG EOP
15" INV (EX CB) = 403.60 OUT
TOP OF GRATE 410.18

101 STA 404+93.44 25.0 LT TO STA 101+93.43 5.0 LT
CONST. 17 LF X 18" RCP, CLASS III
CONST. CB + 93, 25' LT ALONG EOP
18" INV (103) = 398.81 OUT
TOP OF GRATE 403.81

102 STA 101+93.41 18.5 RT TO STA 101+93.43 4.99 LT
CONST. 21 LF X 18" RCP, CLASS III
CONST. CB + 93, 18.5' RT
18" INV (103) = 398.90 OUT
TOP OF GRATE 403.45

103 STA 103+93.43 5.0 LT TO STA 104+42.04 5.0 LT
CONST. 245 LF X 18" RCP, CLASS III
CONST. MH + 93, 5' LT
18" INV (101) = 398.71 in
18" INV (102) = 398.71 in
18" INV (106) = 398.71 OUT
TOP OF GRATE 403.71

104 STA 104+42.00 14.0 LT TO STA 104+42.04 5.0 LT
CONST. 6 LF X 18" RCP, CLASS III
CONST. CB + 42, 5' LT
18" INV (106) = 386.38 OUT
TOP OF GRATE 391.38

105 STA 506+92, 14' RT TO STA 104+42 5.00 LT
CONST. 17 LF X 18" RCP, CLASS III
CONST. CB + 42, 14' RT ALONG EOP
18" INV = 386.48 OUT
TOP OF GRATE 391.08

106 STA 104+42 5.0 LT TO STA 106+57 5 LT
CONST. 212 LF x 18" RCP, CLASS III
CONST. MH + 42, 5' LT ALONG EOP
18" INV x 3 (103, 104, 105)= 386.28 in
18" INV= 386.28 OUT
TOP OF GRATE 391.28

107 STA 106+57 14.0 LT TO STA 106+57 5.0 LT
CONST. 6 LF X 18" RCP, CLASS III
CONST. SHALLOW CB + 57, 14' LT, ALONG EOP
18" INV (108) = 382.10 OUT
TOP OF GRATE 385.07

108 STA 106+57 5.0 LT TO STA 107+50 13.0 LT
CONST. 93 LF X 18" RCP, CLASS III
CONST. MH + 57, 5' LT
18" INV x 3 (106, 107, 109) = 381.35 in
18" INV (403) = 381.35 OUT
TOP OF GRATE 385.07

109 STA 106+56 15.0 RT TO STA 106+57 5.0 RT
CONST. 17 LF X 15" RCP, CLASS III
CONST. SHALLOW CB + 57, 15' RT ALONG EOP
15" INV (108) = 381.80 OUT
TOP OF GRATE 384.75

110 STA 107+50 13.0 LT TO STA 107+63 35.0 LT
CONST. 24 LF X 18" RCP, CLASS III
CONST. MH +50, 13' LT ALONG EOP
18" INV (108, 111) = 380.60 in
18" INV (112) = 380.60 OUT
TOP OF GRATE 385.90

111 STA 107+50 38.0 LT TO STA 107+50 13.0 LT
CONST. 47 LF X 18" RCP, CLASS III
CONST. SHALLOW CB +50, 38' RT ALONG CURBLINE
18" INV (110) = 380.95 OUT
TOP OF GRATE 383.90

112 CONST. OF +63, 35' LT
18" INV (110) = 380.40 in

113 CONST. OF +68, 34' LT
18" INV (114) = 381.00 in

114 STA 109+48 11.0 RT TO STA 107+67 35.0 LT
CONST. 188 LF X 18" RCP, CLASS III
CONST. MH +48, 11' RT
18" INV (113) = 383.00 OUT
18" INV x2 (114, 115) = 383.00 in
TOP OF GRATE 386.84

115 STA 109+48 25.0 RT TO STA 109+47.9 11.0 RT
CONST. 11 LF X 18" RCP CLASS III
CONST. CB +48, 25' RT ALONG CURBLINE
18" INV (114) = 383.20 OUT
TOP OF COVER 387.15

116 STA 109+48 14.0 LT TO STA 109+8 11.0 RT
CONST. 22 LF X 18" RCP, CLASS III
CONST. CB +48, 14' LT
18" INV (114) = 383.20 OUT
TOP OF GRATE 387.60

NASON CONNECTOR

PROJECT NAME: ST. ALBANS
PROJECT NUMBER: HPP 8000(17)

FILE NAME: 57414_TYP.dgn
PROJECT LEADER: M.A. COLGAN
DESIGNED BY: D.M. PECK
DRAINAGE NOTES (SHEET 1 OF 7)

PLOT DATE: 5/18/2016
DRAWN BY: DMP / WAD
CHECKED BY: G.L. BAKOS
SHEET 68 OF 211

117 STA 300+70 14.0 LT TO STA 300+98 2.0 LT
CONST. 27 LF X 15" RCP, CLASS III
CONST. SHALLOW CB +70, 14'LT ALONG CURBLINE
15" INV (118) = 383.70 OUT
TOP OF GRATE 386.14

118 STA 300+98 2.0 LT
CONST. DMH + 98, 2' LT OVER EXISTING 18" HDPE
15" INV (117) = 383.05 IN
15" INV (119) = 383.05 IN
18" INV (120) = 383.05 OUT
TOP OF RIM 386.15

119 STA 300+98 25.0 RT TO STA 300+98 2.0 LT
CONST. 31 LF X 15" RCP, CLASS III
CONST. SHALLOW CB + 98, 28' RT
15" INV (118) = 383.30 OUT
TOP OF GRATE 385.78

120 STA 302+85 13.0 LT
CONST. DMH +85, 1' RT OVER EXISTING 18" HDPE
15" INV (121) = 382.25 IN
15" INV (122) = 382.25 IN
18" INV (118) = 382.25 IN
18" INV (124) = 382.25 OUT
TOP OF RIM 385.35

121 STA 302+85 13.0 LT TO STA 302+85 1.0 RT
CONST. 11 LF X 15" RCP, CLASS III
CONST. CB + 85, 13' LT ALONG CURBLINE
15" INV (120) = 382.35 OUT
TOP OF GRATE 385.15

122 STA 302+85 22.0 RT TO STA 302+85 1.00 RT
CONST. 17 LF X 15" RCP, CLASS III
CONST. SHALLOW CB + 85, 22' RT ALONG CURBLINE
15" INV (120) = 382.45 OUT
TOP OF GRATE 384.90

123 STA 305+15 14.0 LT TO STA 305+15 2.0 RT
CONST. CB 17 LF X 18" RCP, CLASS III
CONST. SHALLOW CB + 15, 14' LT ALONG CURBLINE
18" INV (124) = 381.3 OUT
TOP OF GRATE 384.15

124 STA 305+15 2.0 RT
CONST. DMH +15, 2' RT OVER EXISTING 18" HDPE
18" INV (123) = 381.10 IN
18" INV (125) = 381.20 IN
18" INV (120) = 381.20 IN
18" INV (127) = 381.10 OUT
TOP OF RIM 384.32

125 STA 305+15 15.0 RT TO STA 305+15 2.0 RT
CONST. 10 LF X 18" RCP, CLASS III
CONST. SHALLOW CB +15, 15' RT ALONG CURBLINE
18" INV (124) = 381.20 OUT
TOP OF GRATE 384.13

126 STA 306+65 38.0 LT TO STA 306+85 49.0 LT
CONST. MH +65, 38.0 LT
CONST. 18 LF x 18" RCP
OUTlet +85.0, 49.0 LT
18" INV (127) = 379.80 IN
18" INV (pond) = 379.50 OUT
TOP OF RIM 385.00

127 STA 306+60 1.0 RT TO STA 306+65 38.0 LT
CONST. MH +60, 1' RT OVER EXISTING 18" HDPE
CONST 36 LF x 18" RCP
18" INV (124) = 380.00 IN
18" INV (128) = 380.00 IN
18" INV(126) = 379.75 OUT
TOP OF GRATE 384.85

128 STA 307+18 BL
CONST. MH +18, ALONG baseline
18" INV (129) = 380.48 IN
18" INV (130) = 380.48 IN
18" INV (127) = 380.48 OUT

129 STA 307+18 14' RT TO STA 307+18 BL
CONST. 11 LF X 18" RCP CLASS III
CONST. CB +18, 14' RT ALONG CURBLINE
18" INV (128) = 380.75 OUT
TOP OF GRATE 384.32

130 STA 307+65 14.0 LT TO STA 307+18 BL
CONST. 46 LF X 18" RCP, CLASS III
CONST. CB +65, 14' LT
18" INV (128) = 381.00 OUT
TOP OF GRATE 385.20

131 STA 310+66 13.0 LT TO STA 310+66 7.0 RT
CONST. 3 LF X 18" RCP, CLASS III (to 132)
CONST. 141 LF x 18" RCP, CLASS III (to 10)
CONST. CB + 66, 13' RT ALONG CURBLINE
18" INV (10) = 379.90 OUT
18" INV (132) = 380.60 IN
TOP OF GRATE 385.39

132 STA 310+66 7.0 LT TO STA 312+ 9.0 LT
CONST. 181 LF X 18" RCP, CLASS III
CONST. MH +66, 7' LT
18" INV (131) = 380.70 OUT
18" INV (133) = 380.70 IN
18" INV (135) = 380.70 IN
TOP OF RIM 385.52

133 STA 310+66 14.0 LT TO STA 310+ 7.0 LT
CONST. 17 LF x 18" RCP, CLASS III
CONST. CB +66, 14' RT ALONG CURBLINE
18" INV (132) = 381.85 OUT
TOP OF RIM 384.8

10 STA 309+24 44 LT
CONST. OF +24, 44' LT
18" INV (131) = 380.3 IN

134 STA 312+50 16.0 LT TO STA 312+50 9.0 LT
CONST. 4 LF X 18" RCP, CLASS III
CONST. SHALLOW CB +50, 16' LT ALONG CURBLINE
18" INV (135) = 381.74 OUT
TOP OF GRATE 384.74

135 STA 312+50 9.00 LT
CONST DMH +50, 9'LT
18" INV (134) = 381.60 IN
18" INV (136) = 381.60 IN
18" INV (132) = 381.60 OUT
TOP OF RIM 384.89

136 STA 312+50 14.00 RT TO 312+50 9.0 LT
CONST. 19'x15" RCP, CLASS III
CONST. SHALLOW CB +50, 14'RT ALONG CURBLINE
15" INV (135) = 382.10 OUT
TOP OF GRATE 384.55

137A STA 314+06 23.00 LT TO EX 30" RCP
Remove EXISTING MH and install 6' dia DMH
18" INV (137) = 379.85 IN
30" INV (Ex) = 379.60 OUT
TOP OF GRATE 385.70

137 STA 314+06 14.0 LT TO 314+06 23' LT
CONST. 7 LF x 18" RCP, CLASS III
CONST. CB +06, 23' LT ALONG CURBLINE
18" INV (137A) = 380.00 OUT
18" INV (138) = 308.00 IN
12" INV (Ex) = 380.00 IN
TOP OF GRATE 385.65

138 STA 314+08 13.00 RT TO 314+06 14' LT
CONST. 24 LF x 18" RCP, CLASS III
CONST. CB +06, 14' RT ALONG CURBLINE
8" INV (EX) = 380.45 IN
18" INV (137) = 380.55 OUT
TOP OF GRATE 385.63

LEMNAH DRIVE

PROJECT NAME: ST. ALBANS
PROJECT NUMBER: HPP 8000(17)

FILE NAME: 57414_TYP.dgn
PROJECT LEADER: M.A. COLGAN
DESIGNED BY: D.M. PECK
DRAINAGE NOTES (SHEET 2 OF 7)

PLOT DATE: 5/18/2016
DRAWN BY: DMP / WAD
CHECKED BY: G.L. BAKOS
SHEET 69 OF 211

139 STA 316+61 51.0 LT TO STA 316+70 35.0 LT
CONST. 17 LF X 18" RCP, CLASS III
CONST. SHALLOW CB +61, 51'LT ALONG EOP
18" INV (140) = 380.95 OUT
TOP OF GRATE 386.45

140 STA 316+70 35.0 LT TO STA 316+83 43" LT
CONST. DMH + 70, 35' LT
CONST. 14 LF x 18" RCP, CLASS III
18" INV (139) = 380.75 IN
18" INV (141)= 380.75 IN
18" INV (EX CB) = 381.50 OUT
TOP OF RIM 386.47

141 STA 316+62 23.0 RT TO STA 316+70 35.00 LT
CONST. 56 LF X 18" RCP, CLASS III
CONST. CB + 62, 23' RT
18" INV (118) = 381.30 OUT
TOP OF GRATE 386.24

142 STA 317+24 37.0 RT TO STA 2003+84 3.0 LT
CONST. CB +24, 37' RT
CONST. 24 LF X 15" RCP, CLASS III
18" INV (EX MH) = 380.10 OUT
18" INV (143) = 383.35 IN
TOP OF RIM 386.75

143 STA 317+18 47.0 RT TO STA 317+24 37.0 RT
CONST. 8 LF X 15" RCP, CLASS III
CONST. CB + 18, 47' RT ALONG EOP
18" INV (142) = 380.50 OUT
18" INV (144) = 380.75 IN
TOP OF GRATE 386.75

144 STA 317+29 56.0 RT TO STA 317+18 47.00 RT
CONST. 13 LF X 15" RCP, CLASS III
CONST. CB + 29, 56' RT ALONG EOP
18" INV (143) = 381.00 OUT
TOP OF GRATE 386.75

145 STA 2002+88 16.0 LT TO STA 2003+04 19.0 RT
CONST. CB 14 LF X 15" RCP, CLASS III
CONST. CB + 88, 16' LT ALONG EOP
18" INV (146) = 380.50 OUT
TOP OF GRATE 385.45

146 STA 2003+04 19.0 LT TO STA 2003+05 6.0 LT
CONST. DMH +04, 19' LT ALONG EOP
CONST. 9 LF x 18" RCP, CLASS III
18" INV (EX DMH) = 373.90 OUT
18" INV (145) = 380.20 IN
18" INV (147) = 381.00 IN
TOP OF RIM 385.90

146A STA 2003+04 6.00 LT
EXISTING DMH OVER 36" RCP
36" INV (ex)= 373.80 IN
18" RCP (146)= 380.00 IN
18" RCP (140)= 380.15 IN
36" RCP (ex) = 373.80 OUT
RIM= 386.3

147 STA 2003+58 61.0 LT TO STA 2003+04 19.0 LT
CONST. 65 LF X 15" RCP, CLASS III
CONST. CB +58, 61' LT ALONG CURBLINE
18" INV (146) = 381.65 OUT
TOP OF GRATE 386.50

148 STA 2004+31 23.0 LT TO STA 2003+84 3.0 LT
CONST CB +31, 23' LT ALONG CURBLINE
CONST 49 LF x 18" RCP, CLASS III
18" INV (EX DMH) = 380.40 OUT
TOP OF GRATE 386.30

148A STA2003+84 3.00 LT
Ex DMH OVER 36" RCP
36 RCP (ex)= 374.30 IN
18 RCP (148)= 379.90 IN
18" RCP (142)= 379.90 IN
36" RCP (ex)= 374.3 OUT
RIM= 386.8

LOWER WELDEN STREET ROUNDABOUT

PROJECT NAME: ST. ALBANS
PROJECT NUMBER: HPP 8000(17)

FILE NAME: 57414_TYP.dgn
PROJECT LEADER: M.A. COLGAN
DESIGNED BY: D.M. PECK
DRAINAGE NOTES (SHEET 3 OF 7)

PLOT DATE: 5/18/2016
DRAWN BY: DMP / WAD
CHECKED BY: G.L. BAKOS
SHEET 70 OF 211

149 STA 402+89 17.0 LT
CONST. CB +89, 17'LT OVER EXISTING 12" RCP
REMOVE CB & SALVAGE EXISTING CB FRAME & GRATE TO CITY
12" INV (EX) = 379.50 OUT
TOP OF GRATE 386.40

150 STA 403+35 14.0 RT
CONST. CB +35, 14'LT OVER EXISTING 12" RCP
REMOVE CB & SALVAGE EXISTING CB FRAME & GRATE TO CITY
12" INV (EX) = 382.70 OUT
TOP OF GRATE 386.40

151 STA 404+14 16.0 LT TO STA 300+98 2.00 LT
CONST. CB + 14, 16' LT OVER EXISTING 12" RCP
12" INV (EX) = 380.65 OUT
12" INV (EX CB) = 380.65 IN
TOP OF GRATE 385.50

152 STA 404+41 41.0 LT TO STA 404+41 26.0 LT
CONST. SHALLOW CB +41, 41' LT
MODIFY EXISTING CB to DMH
CONST. 12 LF x 12" RCP, CLASS III
12" INV (EX CB) = 380.80 OUT
TOP OF RIM 383.50

153 STA 405+75 14.0 RT
CONST. CB + 75, 14' LT ALONG EOP
REMOVE CB & SALVAGE EXISTING CB FRAME & GRATE TO CITY
12" INV (EX) = 380.30 OUT
TOP OF GRATE 385.43

154 STA 405+96 37.0 LT TO STA 405+96 29.00 LT
CONST. 6 LF X 12" RCP, CLASS III
CONST. SHALLOW CB + 96, 37' LT
MODIFY EXISTING CB to DMH
8" INV (EX CB) = 382.10 OUT
TOP OF GRATE 383.75

155 STA 406+05 16.0 LT
CONST. CB + 05, 16' LT OVER EXISTING 8" CI
8" INV (EX CB) = 380.50 IN
8" INV (EX CB) = 379.62 OUT
TOP OF GRATE 385.10

156 STA 406+36 14.0 RT
CONST. CB +36, 14' RT OVER EXISTING 12" RCP ALONG EOP
12" INV (EX CB) = 381.80 OUT
TOP OF GRATE 385.22

157 STA 407+52 16.0 LT TO STA 407+54 10.0 LT
CONST. 3 LF X 18" RCP, CLASS III
CONST. CB +52, 16' LT ALONG EOP
18" INV (158) = 378.50 OUT
TOP OF GRATE 384.50

158 STA 407+54 10.0 LT
CONST. DMH +54, 10' LT OVER EXISTING 21" RCP
18" INV (157) = 378.47 IN
18" INV (159) = 378.47 IN
18" INV (EX) = 378.2 IN
18" INV (EX) = 378.2 OUT
TOP OF RIM 384.74

159 STA 407+54 14.0 RT TO STA 407+54 10' LT
CONST. CB +54, 14' RT ALONG EOP
CONST. 21 LF x 18" RCP, CLASS III
18" INV (158) = 378.53 OUT
TOP OF GRATE 384.67

160 STA 408+67 14.00 RT
CONST. CB +67, 14' RT ALONG CURBLINE
15" INV (EX) = 381.30 IN
TOP OF RIM 385.25

161 STA 408+32 14 LT
CONST. CB +32, 14' LT ALONG CURBLINE
CONST.6' DIA DMH +32, OVER EXIST. 36" RCP, APPROX. 22' LT
CONST. 6 LF x 15" RCP CLASS III
15" RCP = 379.00 out
RIM= ADJUST TO GRADE

411 STA 801+95, 45.0 LT TO STA 802+00 24.0 LT
CONST. 18 LF X 15" HPDE
CONST. RCDI + 95, 45' LT IN THE GRASSED AREA
15" INV (412) = 379.70 OUT
TOP OF GRATE 383.80

412 STA 802+00 24.0 LT TO STA 802+04 14.0 LT
CONST. 7 LF x 18" RCP
CONST. CB + 00, 23.9' LT ALONG CURBLINE
15"INV (504) = 379.85 IN
15"INV (411) = 379.55 IN
15"INV (413) = 379.45 OUT
TOP OF GRATE=

413 STA 802+04 14.0 LT
CONST 6' DIA DMH + 04, 14' LT OVER EXISTING 21" RCP
21" INV (A5)= 379.35 IN
15" INV (412)= 379.40 IN
18" INV (A4)= 379.50 IN
21" INV (A2)= 379.35 OUT
TOP OF RIM=

A1 STA 800+50. 12.0 RT
ADJUST CB GRATE O.1' BELOW GRADE

A2 STA 801+55, 13.0 LT
ADJUST CB GRATE O.1' BELOW GRADE

A3 LEFT INTENTIONALLY BLANK

A4 STA 802+18, 24.0 RT TO STA 802+04 14.0 LT
CONST 36 LF x 18" RCP, CLASS III
PLUG EXISTING 6" OUTLET
ADJUST CB GRATE O.1' BELOW GRADE
18" INV (413)= 379.75 OUT
TOP OF GRATE 384.90

A7 STA 501+06, 9.00 LT
ADJUST SAN MH COVER, SET TO COVER GRADE

A8 STA 500+81, 17.0 RT
CHANGE CB TO MH, SET COVER TO GRADE

A9 STA 412+36, 12.0 RT
CORE HOLE IN EXISTING CB FOR NEW 15" RCP OUTLI
15" INV (404)= 381.90 OUT
ADJUST CB GRATE O.1' BELOW GRADE
TOP OF GRATE 386.15

A14 STA 501+88 BASELINE
ADJUST DMH COVER
CORE TWO HOLES FOR NEW PIPES
15" INV (503)= 379.5 IN
18" INV (408)= 379.50 IN
21" INV (413)= 379.50 OUT

ALLEN STREET TO MARKET STREET

PROJECT NAME: ST. ALBANS
PROJECT NUMBER: HPP 8000(17)

FILE NAME: 57414_TYP.dgn
PROJECT LEADER: M.A. COLGAN
DESIGNED BY: D.M. PECK
DRAINAGE NOTES (SHEET 4 OF 7)

PLOT DATE: 5/18/2016
DRAWN BY: DMP / WAD
CHECKED BY: G.L. BAKOS
SHEET 71 OF 211

401 STA 414+10, 12.0 RT TO STA 414+10 12.0 LT
CONST. 20 LF X 15" RCP, CLASS III
CONST. CB + 10, 12' RT, ALONG CURBLINE
15" INV (402) = 382.70 OUT
TOP OF GRATE 386.70

402 STA 414+10 12.0 LT TO STA 39+74, 20.0 RT
CONST. 128 LF X 15" RCP, CLASS III
CONST. CB + 10, 12' LT ALONG GUTTER LINE
15" INV (401) = 382.85 IN
15" INV (403) = 382.55 OUT
TOP OF GRATE 386.85

403 STA 39+74, 20.0 RT TO STA 38+46 13.0 LT
CONST. 128 LF X 15" RCP, CLASS III
CONST. 4' DIA DMH + 74, 20' RT
15" INV (402) = 379.40 IN
18" INV (stub) = 379.40 IN Connect to 18" stub left by others
18" INV (601)= 380.00 IN
18" INV (A11) = 379.40 OUT
TOP OF COVER 387.30

404 STA 411+60, 12.0 RT TO STA 412+36, 12.0 RT
411+60 12.0 RT TO STA 411+10, 12.0 RT
CONST. 72 LF X 15" RCP, CLASS III BACK
CONST. 46 LF X 15" RCP, CLASS III FORWARD
CONST. CB + 60, 12' RT
18" INV (A9) = 381.45 IN
18" INV (405) = 381.45 OUT
TOP OF GRATE 385.95

405 STA 411+10, 12.0 RT TO STA 410+60, 20.0 RT
CONST. 46 LF X 15" RCP, CLASS III
CONST. CB + 10, 12' RT ALONG CURBLINE
15" INV (404) = 380.90 IN
15" INV (406) = 380.90 OUT
TOP OF GRATE 385.95

406 STA 410+60, 20.0 RT TO STA 410+30, 35.0 RT
CONST. 30 LF X 18" RCP, CLASS III
CONST. CB + 60, 20' LT
18" INV (405) = 380.60 IN
18" INV (407) = 380.60 OUT
TOP OF COVER 385.40

407 STA 410+30, 35.0 RT TO STA 501+32, 24.0 RT
CONST. 62 LF X 18" RCP CLASS III
CONST. CB + 30, 35' RT
18" INV (406) = 380.40 IN
18" INV (408) = 380.40 OUT
TOP OF COVER 386.05

408 STA 501+32, 24.0 RT TO STA 501+88 BASELINE
CONST. 50 LF X 18" RCP, CLASS III
CONST. DMH + 32, 24' RT
18" INV (409) = 380.10 IN
18" INV (407) = 380.00 IN
18" INV (A5) = 380.00 OUT
TOP OF GRATE 385.45

409 STA 410+64, 17.0 LT TO STA 501+32, 24.0 RT
CONST. 38 LF X 15" RCP, CLASS III
CONST. CB + 85, 17' LT
15" INV (408) = 380.40 OUT
TOP OF GRATE 385.30

410 LEFT INTENTIONALLY BLANK

501 STA 503+75, 12.0 LT TO STA 503+75, 12.0 RT
CONST. 20 LF X 15" RCP, CLASS III
CONST. RCDI + 75, 12' LT ALONG GUTTER LINE
15" INV (502) = 381.35 OUT
TOP OF GRATE 385.25

502 STA 503+75, 12.0 RT TO STA 502+34, 17.0 RT
CONST. 128 LF X 15" RCP, CLASS III
CONST. CB + 34, 17' RT ALONG EOP
15" INV (501) = 381.20 IN
15" INV (503) = 381.10 OUT
TOP OF GRATE 385.25

503 STA 502+34, 17.0 RT TO STA 501+88 BASELINE
CONST. 44 LF X 15" RCP, CLASS III
CONST. CB + 34, 17' RT
15" INV (502) = 380.30 IN
15" INV (A5) = 380.15 OUT
TOP OF GRATE 384.30

504 STA 502+20, 20.5 LT TO STA 802+00 24.0 LT
CONST. 46 LF X 15" RCP, CLASS III
CONST. CB + 20, 20.5' LT ALONG EOP
15" INV (412) = 380.25 OUT
TOP OF GRATE

505 LEFT INTENTIONALLY BLANK

506 LEFT INTENTIONALLY BLANK

507 LEFT INTENTIONALLY BLANK

508 LEFT INTENTIONALLY BLANK

509 STA 506+92, 21.0 LT
CONST. RCDI + 92, 21' LT OVER EXISTING DRAIN LINE
INV (OUT) = MAINTAIN EXISTING ELEV (CONTRACTOR TO FIELD VERIFY)
TOP OF GRATE MATCH EXISTING PAVEMENT

510 LEFT INTENTIONALLY BLANK

REMOVAL NOTES

R1 STA 410+40, 27 RT
REMOVE EXISTING MH
PLUG AND ABANDON EXISTING DRAIN PIPES

R2 STA 410+30, 32 RT
REMOVE EXISTING MH
PLUG AND ABANDON EXISTING DRAIN PIPES

R3 STA 413+80, 11 RT
REMOVE EXISTING CB
PLUG AND ABANDON EXISTING DRAIN PIPES

R4 STA 413+76, 12 LT
REMOVE EXISTING CB
PLUG AND ABANDON EXISTING DRAIN PIPES

ADJUSTMENT NOTES

A5 STA 501+88 BASELINE
ADJUST DMH COVER
CORE TWO HOLES FOR NEW PIPES
15" INV (503)= 379.5 IN
18" INV (408)= 379.50 IN
21" INV (413)= 379.50 OUT

A6 STA 501+99, 1.0 RT
REMOVE EXISTING CB

A7 STA 501+06, 9.00 LT
ADJUST SAN MH COVER, SET TO COVER GRADE

A8 STA 500+81, 17.0 RT
CHANGE CB TO MH, SET COVER TO GRADE

A9 STA 412+36, 12.0 RT
CORE HOLE IN EXIST. CB FOR NEW 15" RCP OUTLET
CONST 72 LF X 15" RCP CLASS III
15" INV (404)= 381.90 OUT
ADJUST CB GRATE O.1' BELOW GRADE
TOP OF GRATE 386.15

A10 STA 38+65. 22.0 RT
ADJUST EXISTING CB GRATE O.1' BELOW GRADE

A11 STA 38+46 13.0 LT
ADJUST CB GRATE O.1' BELOW GRADE
CORE HOLE FOR NEW 15" RCP FROM CB 403

A12 LEFT INTENTIONALLY BLANK

A100 STA 38+32 31 RT
ADJUST EXISTING CB GRATE O.1' BELOW GRADE

S1 STA 203+8(1.50 RT
EXIST. SEWER MH
CONST. 182 LF OF 8" PVC PIPE
CORE HOLE INTO EXISTING SMH
8" PVC INV OUT = 381.40 (NEW)
8" PVC INV in = 381.40
8" PVC INV OUT = 381.40

S2 STA 600+0(9.00 LT
CONST. SMH OVER EXIST. 15" AC PIPE
PROVIDE HOLES FOR 15" AC & 8" PVC PIPE
8" PVC INV in = 378.35
15" AC INV in = 378.35
15" AC INV OUT = 378.35

S22 STA 600+1(5.00 RT
EXIST. SEWER MH.
CONST. 18 LF OF 15" PVC PIPE
CORE NEW HOLE FOR 15" PVC PIPE
CONNECT TO STUB FROM SMH STA 40+16, 6.5 LT
15" PVC INV in = 379.00 (NEW)
15" AC INV in = 378.60
15" AC INV OUT = 378.60

ALLEN STREET TO CATHERINE STREET

PROJECT NAME: ST. ALBANS
PROJECT NUMBER: HPP 8000(17)

FILE NAME: 57414_TYP.dgn
PROJECT LEADER: M.A. COLGAN
DESIGNED BY: D.M. PECK
DRAINAGE NOTES (SHEET 5 OF 7)

PLOT DATE: 5/18/2016
DRAWN BY: DMP / WAD
CHECKED BY: G.L. BAKOS
SHEET 72 OF 211

601 STA 600+45, 28.0 LT TO 39+74, 20.0
CONST. 74 LF X 18" RCP, CLASS III
CONST. RCDI + 45, 28' LT ALONG CURBLINE
18" INV (403) = 381.00 OUT
TOP OF GRATE 0.1 FT BELOW GUTTERLINE

602 LEFT BLANK INTENTIONALLY
603 LEFT BLANK INTENTIONALLY
604 LEFT BLANK INTENTIONALLY

605 STA 602+64, 33.0 LT TO 603+50, 33.0
CONST. 82 LF X 18" RCP, CLASS III
CONST. RCDI + 64, 33' LT ALONG CURBLINE
18" INV (606) = 383.80 OUT
TOP OF GRATE 0.1 FT BELOW GUTTERLINE

606 STA 603+50, 33.0 LT TO 603+50, 2.0
CONST. 32 LF X 18" RCP, CLASS III
CONST. CB + 50, 33' LT
18" INV (605) = 383.60 IN
18" INV (607) = 383.60 OUT
TOP OF GRATE 0.1 FT BELOW GUTTERLINE

607 STA 603+50, 2.0 RT
CONST. DMH + 50, 2' RT OVER EXISTING 21" RCP
18" INV (606) = 383.53 IN
21" INV (EXISTING) 383.53 IN
21" INV (EXISTING) = 383.53 OUT
TOP OF COVER MATCH PAVEMENT GRADE

611 STA 604+95 14.00 RT TO 604+98 7.0 RT
CONST. CB +95, 14' RT
CONST. 5 LFx18" RCP, CLASS III
18" INV (612) = 385.19 OUT
TOP OF GRATE MATCH PAVEMENT GRADE

612 STA 604+98 7.00 RT
CONST. MH +98, 7' RT OVER EXISTING 21" RCP
21" INV (EX) = 385.09 IN
21" INV (EX) = 385.09 OUT
18" INV (611) = 385.09 IN
TOP OF RIM MATCH PAVEMENT GRADE

613 STA 605+35 19.0 LT TO 605+62 9.0 RT
CONST. CB +35, 19' LT ALONG CURBLINE
CONST. 36 LF x 18" RCP, CLASS III
18" INV (EX DMH) = 385.36 OUT
TOP OF GRATE 0.1 FT BELOW GUTTERLINE

614 STA 606+06 19.0 RT TO 606+27 9.0 RT
CONST. CB +06, 19' RT ALONG CURBLINE
CONST. 22 LF x 18" RCP, CLASS III
18" INV (EX DMH 615) = 385.5O OUT
TOP OF GRATE 0.1 FT BELOW GUTTERLINE

615 STA 606+27 9.0 RT
EXISTING DMH +27, 9' RT
24" INV (EX)= 382.1 IN
24" INV (EX)= 382.1 IN
18" INV (614)= 382.1 IN
21" INV (EX)= 381.9 OUT
TOP OF RIM MATCH PAVEMENT GRADE

616 STA 607+61 9.0 RT
CONST. MH +60, 9' RT OVER EXISTING 24" RCP
24" INV (EX) = 384.07 IN
24" INV (EX) = 384.07 OUT
18" INV (617) = 383.01 IN
12" INV (EX CB) = 387.00 IN
TOP OF RIM 391.17

617 STA 607+80 21.0 LT TO 607+61 9.0 RT
CONST. CB +80, 21' LT ALONG CURBLINE
CONST. 32 LF x 18" RCP, CLASS III
18" INV (616) = 384.40 OUT
TOP OF GRATE 390.30

618 STA 611+49 9.00 RT
CONST. MH +49, 9' RT OVER EXISTING 24" RCP
24" INV (EX) = 389.14 IN
24" INV (EX) = 389.14 OUT
18" INV (619) = 389.27 IN
TOP OF RIM 393.92

619 STA 611+65 14.00 LT TO 611+49 9.0 RT
CONST. CB +65, 14' LT ALONG CURBLINE
CONST. 24 LF x 18" RCP, CLASS III
18" INV (618) = 389.88 OUT
TOP OF GRATE 393.89

620 STA 613+01 14.00 LT TO 613+04 7.0 RT
CONST. CB +01, 14' LT ALONG CURBLINE
CONST. 19 LF x 18" RCP, CLASS III
18" INV (EX DMH 621) = 390.43 OUT
TOP OF GRATE 394.47

621 STA 613+04 7.00 RT
EXISTING DMH +04, 7' RT
12" INV(ex)= 390.1 IN
12" INV(ex)= 390.3 IN
18" INV(621)= 390.00 IN
18" INV(ex)= 389.8 OUT
TOP OF COVER MATCH PAVEMENT GRADE

622 STA 614+34 13.0 RT
EXISTING DMH +34, 13' RT
18" INV(ex)= 385.8 IN
18" INV(623)= 386.00 IN
18" INV(ex)= 385.8 OUT
TOP OF COVER MATCH PAVEMENT GRADE

623 STA 614+46 14 LT TO 614+34 13.0 RT
CONST. CB +46, 14' LT
CONST. 28 LF x 18" RCP, CLASS III
18" INV (EX CB 622) = 388.0 OUT
TOP OF GRATE 394.77

624 STA 618+00 14 LT TO 618+13 8.0 LT
CONST. CB +00, 14' LT ALONG CURBLINE
CONST. 13 LF x 18" RCP, CLASS III
18" INV (625) = 390.39 OUT
TOP OF GRATE 0.1 FT BELOW GUTTERLINE

625 STA 618+13 8.00 LT TO 619+19 8.0 LT
CONST. MH +13, 8' LT
CONST. 103 LF x 18" RCP, CLASS III
18" INV (624) = 390.10 IN
18" INV (627) = 390.00 OUT
TOP OF RIM MATCH PAVEMENT GRADE

626 STA 619+10 24 RT TO 619+19 8.0 LT
CONST. CB +10, 24' RT ALONG CURBLINE
CONST. 30 LF x 18" RCP, CLASS III
18" INV (627) = 391.33 OUT
TOP OF GRATE 0.1 FT BELOW GUTTERLINE

627 STA 619+19 8 LT TO 619+98 8.0 LT
CONST. MH +19, 8' LT
CONST. 76 LF x 18" RCP, CLASS III
18" INV (626) = 388.83 IN
18" INV (625) = 389.40 IN
18" INV (629) = 389.40 OUT
TOP OF RIM MATCH PAVEMENT GRADE

628 STA 619+98 14.0 LT TO 619+98 8.0 LT
CONST. CB +98, 14' LT ALONG CURBLINE
CONST 3 LFx18" RCP, CLASS III
18" INV (629) = 389.49 OUT
TOP OF GRATE 0.1 FT BELOW GUTTERLINE

629 STA 619+98 8' LT TO 621+19 8' LT
CONST. MH +98, 8' LT
CONST. 118 LF x 18" RCP, CLASS III
18" INV (628) = 388.40 IN
18" INV (627) = 389.00 IN
18" INV (631) = 389.00 OUT
TOP OF RIM MATCH PAVEMENT GRADE

With all the storm drain being RCP, will we still be using booted connections (as stated in the General notes)?

630 STA 621+19 14 LT TO 621+19 8' LT
CONST. CB +19, 14' LT ALONG CURBLINE
CONST. 3 LF x 18" RCP, CLASS III
18" INV (631) = 388.36 OUT
TOP OF GRATE 0.1 FT BELOW GUTTERLINE

631 STA 621+19 8' LT TO 622+97 8.0 LT
CONST. MH +19, 8' LT
CONST. 175 LF x 18" RCP, CLASS III
18" INV (630) = 388.24 IN
18" INV (629) = 388.35 IN
18" INV (633) = 388.35 OUT
TOP OF RIM MATCH PAVEMENT GRADE

A6 STA 501+99, 1.0 RT
REMOVE EXISTING CB

632 STA 622+97 14.00 LT TO 622+97 8.0 LT
CONST. CB +97, 14' LT ALONG CURBLINE
CONST. 3 LF x 18" RCP, CLASS III
18" INV (633) = 387.51 OUT
TOP OF RIM 0.1 FT BELOW GUTTERLINE

633 STA 622+97 8.00 LT TO 623+43 8' LT
CONST MH +97, 8' LT
CONST 45 LF x 18" RCP, CLASS III
18" INV (632) = 387.01 IN
18" INV (631) = 387.40 IN
18" INV (634) = 387.40 OUT
TOP OF RIM MATCH PAVEMENT GRADE

634 STA 623+43 8' LT TO 624+97 8' LT
CONST. MH +43, 8' LT
CONST. 151 LF x 18" RCP, CLASS III
18" INV (635) = 387.15 IN
18" INV (633) = 387.15 IN
18" INV (637) = 387.15 OUT
TOP OF RIM MATCH PAVEMENT GRADE

635 STA 623+43 8.0 LT to 623+43 8.0 LT
CONST. CB +43, 14' RT ALONG CURBLINE
CONST. 19 LF x 18" RCP, CLASS III
18" INV (634) = 387.3 OUT
TOP OF GRATE 0.1 FT BELOW GUTTERLINE

A13 STA 802+18, 24.0 RT TO 802+04 14.0 LT
CONST 36 LF x 18" RCP, CLASS III
PLUG EXISTING 6" OUTLET
ADJUST CB GRATE O.1' BELOW GRADE
18" INV (413)= 379.75 OUT
TOP OF GRATE 384.90

FEDERAL STREET

PROJECT NAME: ST. ALBANS
PROJECT NUMBER: HPP 8000(17)

FILE NAME: 57414_TYP.dgn
PROJECT LEADER: M.A. COLGAN
DESIGNED BY: D.M. PECK
DRAINAGE NOTES (SHEET 6 OF 7)

PLOT DATE: 5/18/2016
DRAWN BY: DMP / WAD
CHECKED BY: G.L. BAKOS
SHEET 73 OF 211

636 STA 624+97 14.00 LT TO 624+97 8.0 LT
CONST. CB +97, 14' LT ALONG CURBLINE
CONST. 3 LF x 18" RCP, CLASS III
18" INV (637) = 386.60 OUT
TOP OF GRATE 0.1 FT BELOW GUTTERLINE

637 STA 624+97 8 LT TO 626+12 8.0 LT
CONST. MH +97, 8' LT
CONST. 112 LF x 18" RCP, CLASS III
18" INV (636) = 386.50 IN
18" INV (634) = 386.35 IN
18" INV (639) = 386.35 OUT
TOP OF RIM MATCH PAVEMENT GRADE

638 STA 626+12 14.0 LT TO 626+12 8.0 LT
CONST. CB +12, 14' LT ALONG CURBLINE
CONST. 3 LF x 18" RCP, CLASS III
18" INV (639) = 385.95 OUT
TOP OF GRATE 0.1 FT BELOW GUTTERLINE

639 STA 626+12 8.00 LT TO 627+00 8.0 LT
CONST. MH +12, 8' LT
CONST. 85 LF x 18" RCP, CLASS III
18" INV (637) = 385.75 IN
18" INV (638) = 385.75 IN
18" INV (640) = 385.75 IN
18" INV (642) = 385.75 OUT
TOP OF RIM MATCH PAVEMENT GRADE

640 STA 626+12 14.00 RT TO 626+12 8.0 LT
CONST. CB +12, 14' RT ALONG CURBLINE
CONST. 19 LF x 18" RCP, CLASS III
18" INV (639) = 385.95 OUT
TOP OF GRATE 0.1 FT BELOW GUTTERLINE

641 STA 627+00 14.0 LT TO 627+00 8.0 LT
CONST. CB +00, 14' LT ALONG CURBLINE
CONST. 3 LF x 18" RCP, CLASS III
18" INV (642) = 385.70 OUT
TOP OF GRATE 0.1 FT BELOW GUTTERLINE

642 STA 627+00 8.0 LT TO 628+02 8.0 LT
CONST. MH +00, 8' LT
CONST. 98 LF x 18" RCP, CLASS III
18" INV (641) = 385.45 IN
18" INV (639) = 385.30 IN
18" INV (644) = 385.30 OUT
TOP OF RIM MATCH PAVEMENT GRADE

643 STA 628+02 14.0 LT TO 628+02 8.0 LT
CONST. CB +02, 14' LT ALONG CURBLINE
CONST. 3 LF x 18" RCP, CLASS III
18" INV (644) = 385.10 OUT
TOP OF GRATE 0.1 FT BELOW GUTTERLINE

644 STA 628+02 8.0 LT TO 630+31 8.0 LT
CONST. MH +02, 8' LT
CONST. 226 LF x 18" RCP, CLASS III
18" INV (643) = 384.9 IN
18" INV (642) = 384.75 IN
18" INV (646) = 384.75 OUT
TOP OF RIM MATCH PAVEMENT GRADE

645 STA 630+31 14.0 LT TO 630+31 8.0 LT
CONST. CB +31, 14' LT ALONG CURBLINE
CONST. 3 LF x 18" RCP, CLASS III
18" INV (646) = 383.50 OUT
TOP OF GRATE 0.1 FT BELOW GUTTERLINE

646 STA 630+31 8.0 LT TO 631+54 4.0 LT
CONST. MH +31, 8' LT
CONST. 120 LF x 18" RCP
18" INV (645) = 383.40 IN
18" INV (644) = 383.40 IN
18" INV (650) = 383.40 OUT
TOP OF RIM MATCH PAVEMENT GRADE

647 STA 630+19 25 RT TO 630+24 21.0 RT
CONST. CB +19, 25' RT ALONG CURBLINE
CONST. 3 LF x 18" RCP, CLASS III
18" INV (648) = 383.53 OUT
TOP OF GRATE 0.1 FT BELOW GUTTERLINE

648 STA 630+24 21 RT
CONST. MH +24, 21' RT OVER EXISTING 18" RCP
18" INV (647) = 383.50 IN
18" INV (EX) = 380.22 IN
18" INV (EX) = 380.22 OUT
TOP OF RIM MATCH PAVEMENT GRADE

649 STA 631+55 19 LT TO 5 LT
CONST. CB +55, 19' LT ALONG CURBLINE
CONST. 12 LF x 18" RCP , CLASS III
18" INV (650) = 382.74 OUT
TOP OF GRATE 0.1 FT BELOW GUTTERLINE

650 STA 631+54 5 LT TO 19 RT
CONST. MH +54, 5" LT
CONST. 56 LF x 18" RCP, CLASS III
18" INV (651) = 382.70 IN
18" INV (646) = 382.70 IN
18" INV (649) = 382.70 IN
18" INV (051) = 382.70 OUT
TOP OF RIM MATCH PAVEMENT GRADE

651 STA 631+51 48 RT TO 631+54 5.0 LT
CONST. CB +51, 48' RT ALONG CURBLINE
CONST. 50 LF x 18" RCP, CLASS III
18" INV (650) = 383.20 OUT
TOP OF GRATE 0.1 FT BELOW GUTTERLINE

652 STA 804+23 27.00 RT TO 631+51 48 RT
CONST. CB +23, 27' RT ALONG CURBLINE
CONST. 174 LF x 18" RCP, CLASS III
18" INV (651) = 383.90 out
TOP OF GRATE 0.1 FT BELOW GUTTERLINE

45 STA 800+78 2.00 LT
EXISTING DMH +78, 2' LT
48" INV (ex)= 369.8 IN
18" INV (ex)= 376.4 IN
12" INV (ex)= 378.2 IN
18" INV (047)= 376.0 IN
48" INV (ex)= 369.80 OUT
Rim= MATCH PAVEMENT GRADE

46 STA 800+95 16.0 RT TO 800+90 11.0 RT
CONST. CB +95, 16' RT ALONG CURBLINE
Modify EXISTING CB TO DMH
CONST 4 LF x 18" RCP, CLASS III
18" INV (EX CB) = 376.60 OUT
TOP OF GRATE 0.1' BELOW GUTTERLINE

47 STA 800+86 17.00 LT TO 800+79 2.0 LT
CONST CB +86, 17' LT ALONG CURBLINE
CONST 15 LF x 18" RCP, CLASS III
18" INV (045) = 377.00 OUT
TOP OF GRATE 0.1' BELOW GUTTERLINE

48A STA 801+92 3.00 LT
EXISTING DMH +92, 3' LT
36" INV (ex)= 374.10 IN
18" INV (048)= 380.00 IN
48" INV (ex)= 372.80 OUT
Rim= MATCH PAVEMENT GRADE

48 STA 802+00 29.00 RT TO 801+93 3.0 LT
CONST. CB +00, 29' RT ALONG CURBLINE
CONST. 31 LF x 18" RCP, CLASS III
18" INV (EX) = 381.75 IN
18" INV (EX) = 381.50 OUT
TOP OF GRATE 0.1' BELOW GUTTERLINE

49 STA 802+61 46.00 RT TO 802+00 29.0 RT
CONST. CB +61, 46' RT ALONG CURBLINE
CONST 60 LF x 18" RCP, CLASS III
18" INV (048) = 382.4 OUT
TOP OF GRATE 0.1' BELOW GUTTERLINE

50 STA 803+01 12.00 LT TO 803+00 8.0 RT
CONST. CB +01, 12" LT ALONG CURBLINE
CONST. 20 LF x 18" RCP, CLASS III
18" INV (051) = 384.95 OUT
TOP OF GRATE 389.00

51 STA 803+00 8.00 RT
CONST. MH +00, 8' RT OVER EXIST. 36" RCP
18" INV (050) = 384.8 IN
18" INV (650) = 379.95 IN
36" INV (EX) = 376.3 IN
36" INV (EX) = 376.3 OUT
TOP OF RIM MATCH PAVEMENT GRADE

53 STA 805+25 23.00 RT TO 805+12 3.0 RT
CONST CB +25, 23' RT ALONG CURBLINE
REMOVE & SALVAGE EXISTING CB AND PIPE TO CITY
CONST. 24 LF X 18" RCP CLASS III
18" INV = 393.60 OUT
TOP OF GRATE 0.1' BELOW GUTTERLINE

54 STA 805+42 13.00 LT TO 805+12 3.0 RT
CONST Shallow CB +42, 13' LT ALONG CURBLINE
REMOVE & SALVAGE EXISTING CB AND PIPE TO CITY
CONST. 36 LF X 18" RCP CLASS III
18" INV = 393.70 OUT
TOP OF GRATE 0.1' BELOW GUTTERLINE

55 STA 805+12 3.0 RT
EXISTING DMH +12, 3' RT
42" INV (EX)= 391.40 IN
18" INV (53)= 393.40 IN
18" INV (54)= 393.40 IN
36" INV (EX)= 391.70 OUT
TOP OF RIM MATCH PAVEMENT GRADE

FEDERAL STREET AND LOWER NEWTON STREET

PROJECT NAME: ST. ALBANS
PROJECT NUMBER: HPP 8000(17)

FILE NAME: 57414_TYP.dgn
PROJECT LEADER: M.A. COLGAN
DESIGNED BY: D.M. PECK
DRAINAGE NOTES (SHEET 7 OF 7)
PLOT DATE: 5/18/2016
DRAWN BY: DMP / WAD
CHECKED BY: G.L. BAKOS
SHEET 74 OF 211

MATCHLINE STA. 101+85

STATION 100+22
BEGIN PROJECT
HPP 8000(17)

STA. 899+00
BEGIN APPROACH

S. MAIN ST. (US 7)

NASON ST. CONNECTOR

101+00

N/F KELLEY

N/F BESSERY TOWERS

N/F OUELLETTE

VT STATE PLANE GRID

Approximate Exist. R.O.W.

899+00 900+00 901+00 902+00 903+00 904+00

3002+00

3001+00

3000+00

STA. 904+25
END APPROACH

ST. ALBANS STATE HWY
(I-89 ACCESS)

LEDGE OUTCROP

100

STA. 3000+50
BEGIN APPROACH

It would be helpful to show direction of flow on all pipes (typical all

0 20 40
SCALE IN FEET

PROJECT NAME: ST. ALBANS	
PROJECT NUMBER: HPP 8000(17)	
FILE NAME: 57414_BDR_NUI_UT.dgn	PLOT DATE: 3/4/2016
PROJECT LEADER: J. D. SALADINO	DRAWN BY: C.J. HAKEY
DESIGNED BY: D. M. PECK	CHECKED BY: ------
GENERAL PLANS (10F 17)	SHEET 77 OF 230

VHB 57414.00

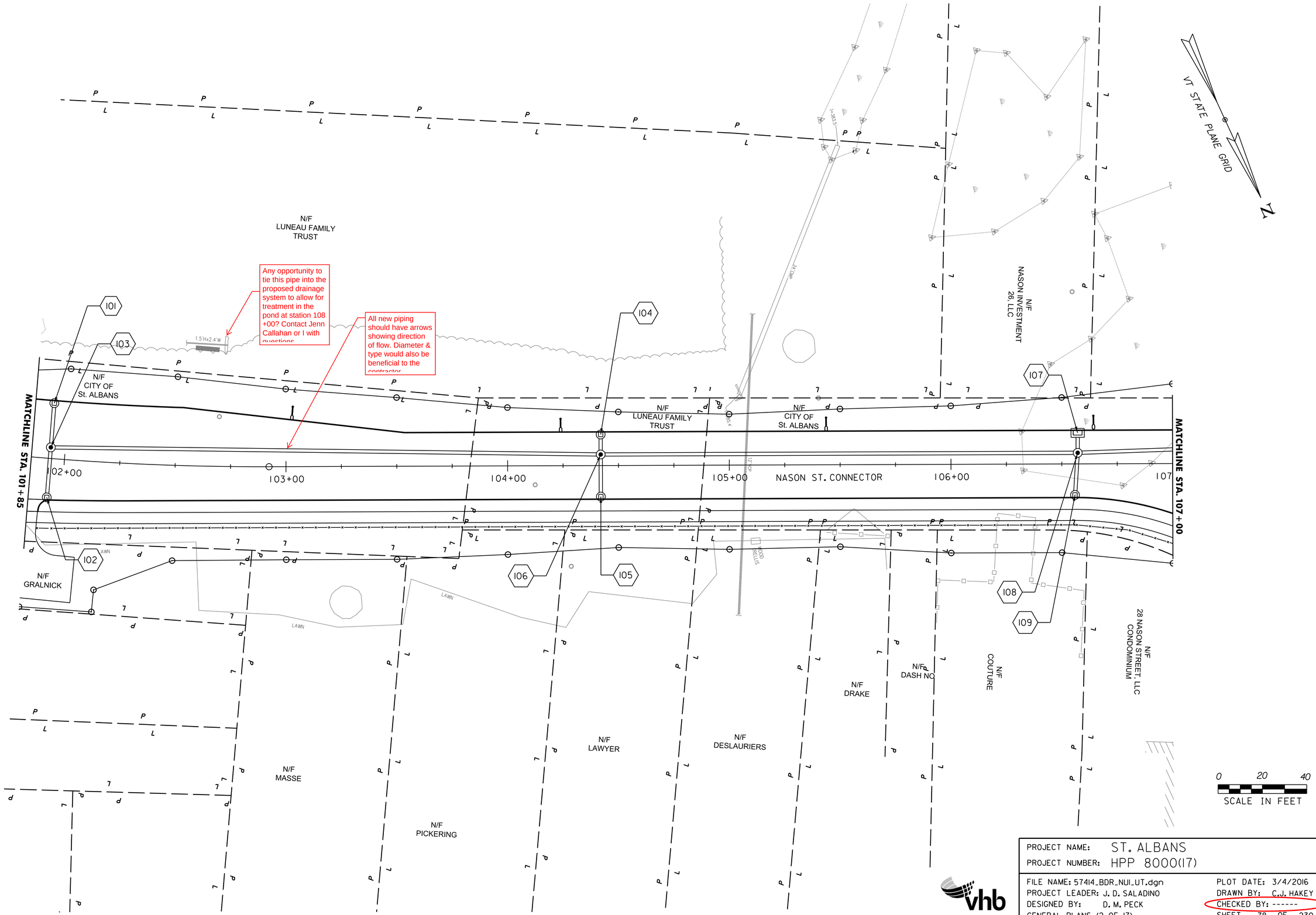

PROJECT NAME: ST. ALBANS
PROJECT NUMBER: HPP 8000(17)

FILE NAME: 57414_BDR_NUI_UT.dgn
PROJECT LEADER: J. D. SALADINO
DESIGNED BY: D. M. PECK
GENERAL PLANS (2 OF 17)

PLOT DATE: 3/4/2016
DRAWN BY: C.J. HAKEY
CHECKED BY: ------
SHEET 78 OF 230

VHB 57414.00

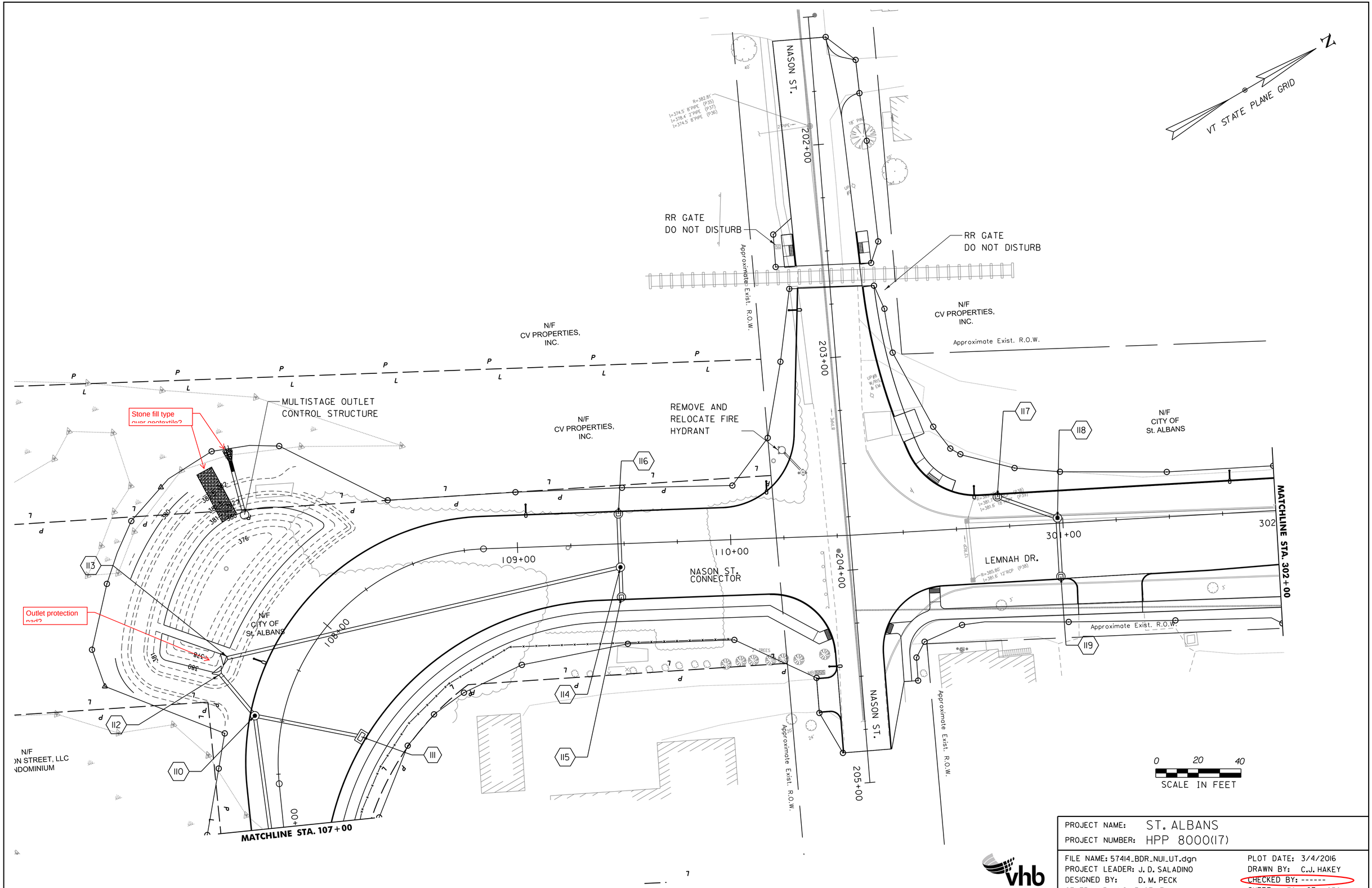

PROJECT NAME: ST. ALBANS	
PROJECT NUMBER: HPP 8000(17)	
FILE NAME: 57414_BDR_NUI_UT.dgn	PLOT DATE: 3/4/2016
PROJECT LEADER: J. D. SALADINO	DRAWN BY: C.J. HAKEY
DESIGNED BY: D. M. PECK	CHECKED BY: ------
GENERAL PLANS (3 OF 17)	SHEET 79 OF 230

VHB 57414.00

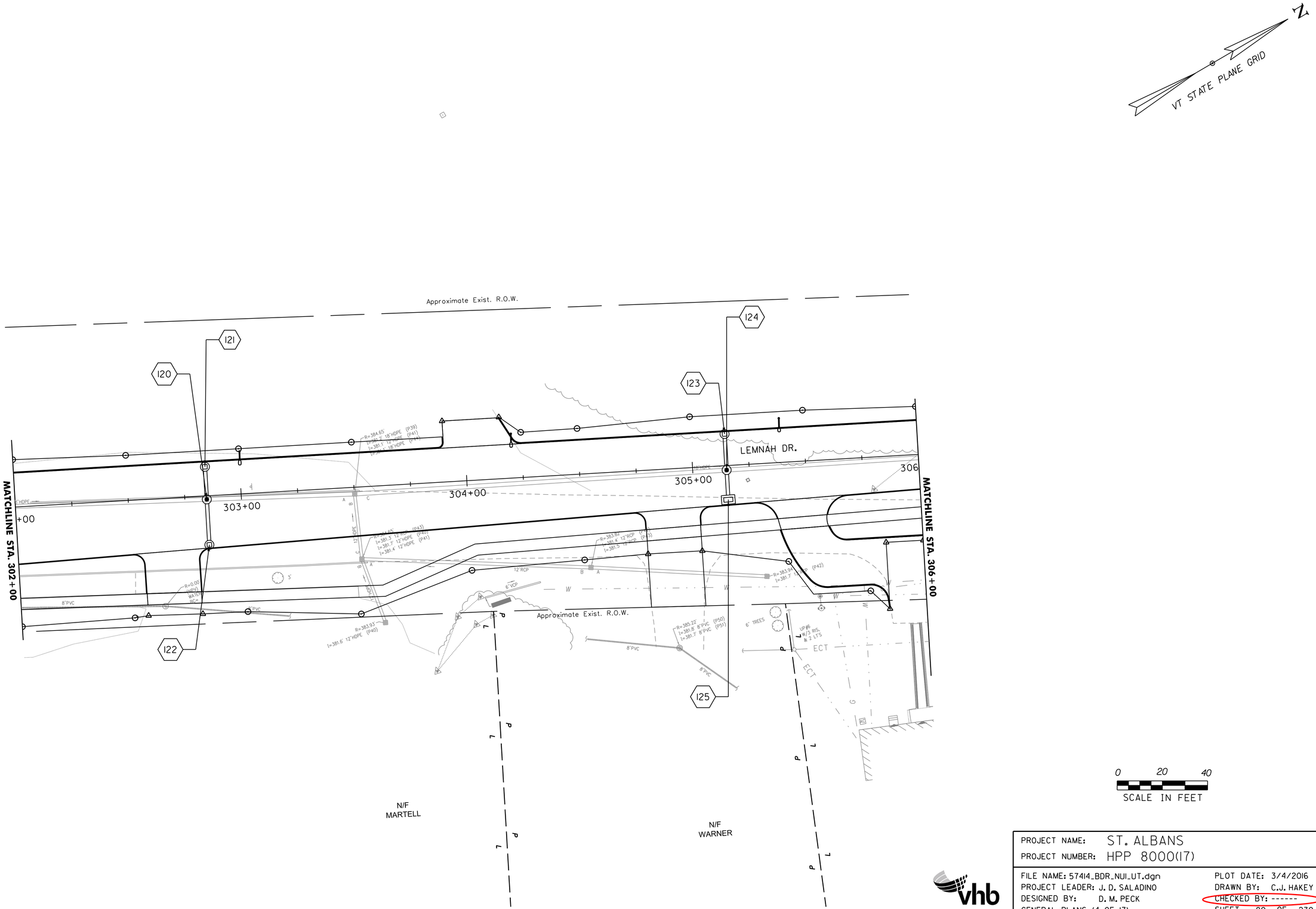

PROJECT NAME: ST. ALBANS	
PROJECT NUMBER: HPP 8000(17)	
FILE NAME: 57414_BDR_NUI_UT.dgn	PLOT DATE: 3/4/2016
PROJECT LEADER: J. D. SALADINO	DRAWN BY: C.J. HAKEY
DESIGNED BY: D. M. PECK	CHECKED BY: ------
GENERAL PLANS (4 OF 17)	SHEET 80 OF 230

VHB 57414.00

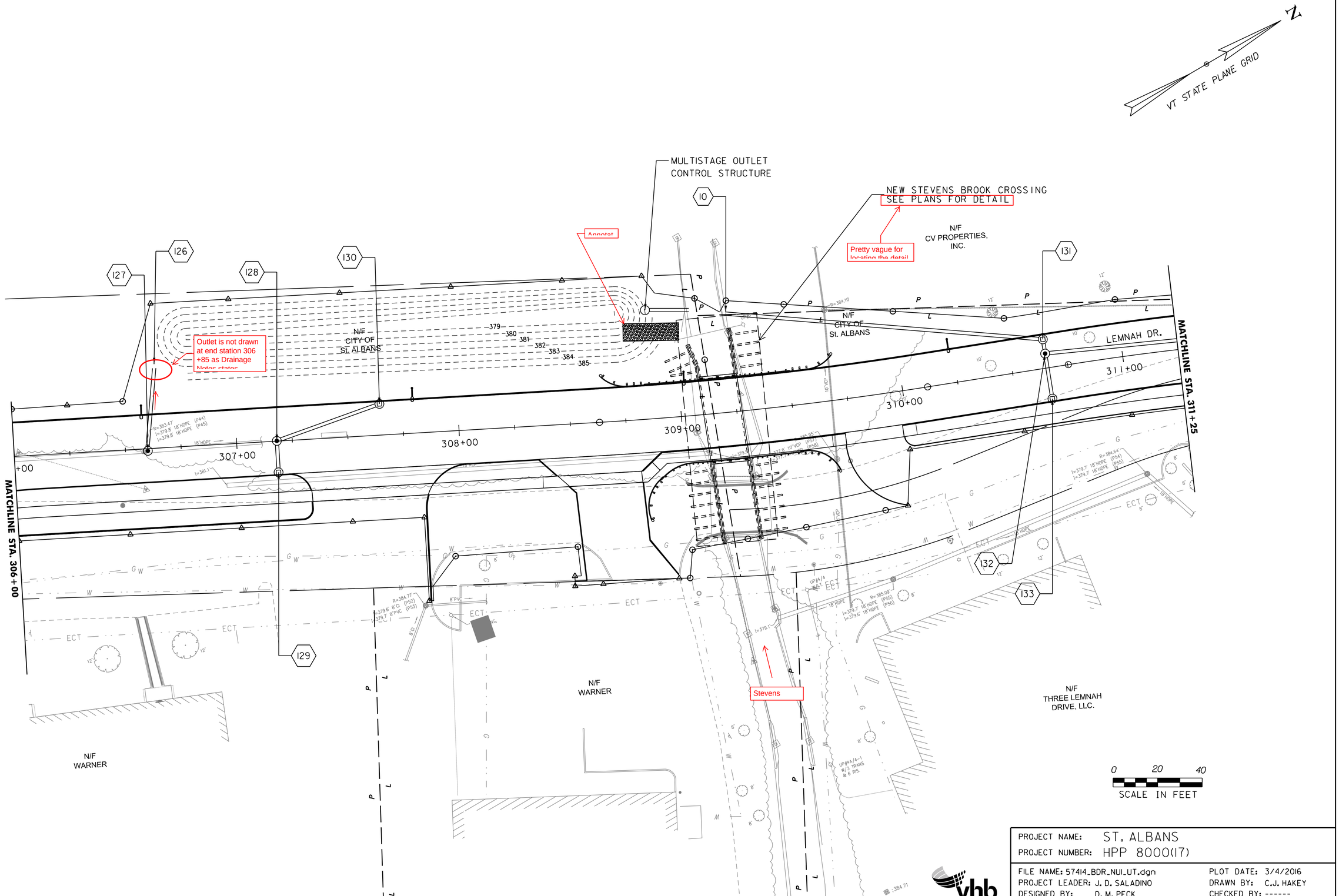

PROJECT NAME: ST. ALBANS
PROJECT NUMBER: HPP 8000(17)

FILE NAME: 57414_BDR_NUI_UT.dgn
PROJECT LEADER: J. D. SALADINO
DESIGNED BY: D. M. PECK
GENERAL PLANS (5 OF 17)

PLOT DATE: 3/4/2016
DRAWN BY: C.J. HAKEY
CHECKED BY: ------
SHEET 81 OF 230

VHB 57414.00

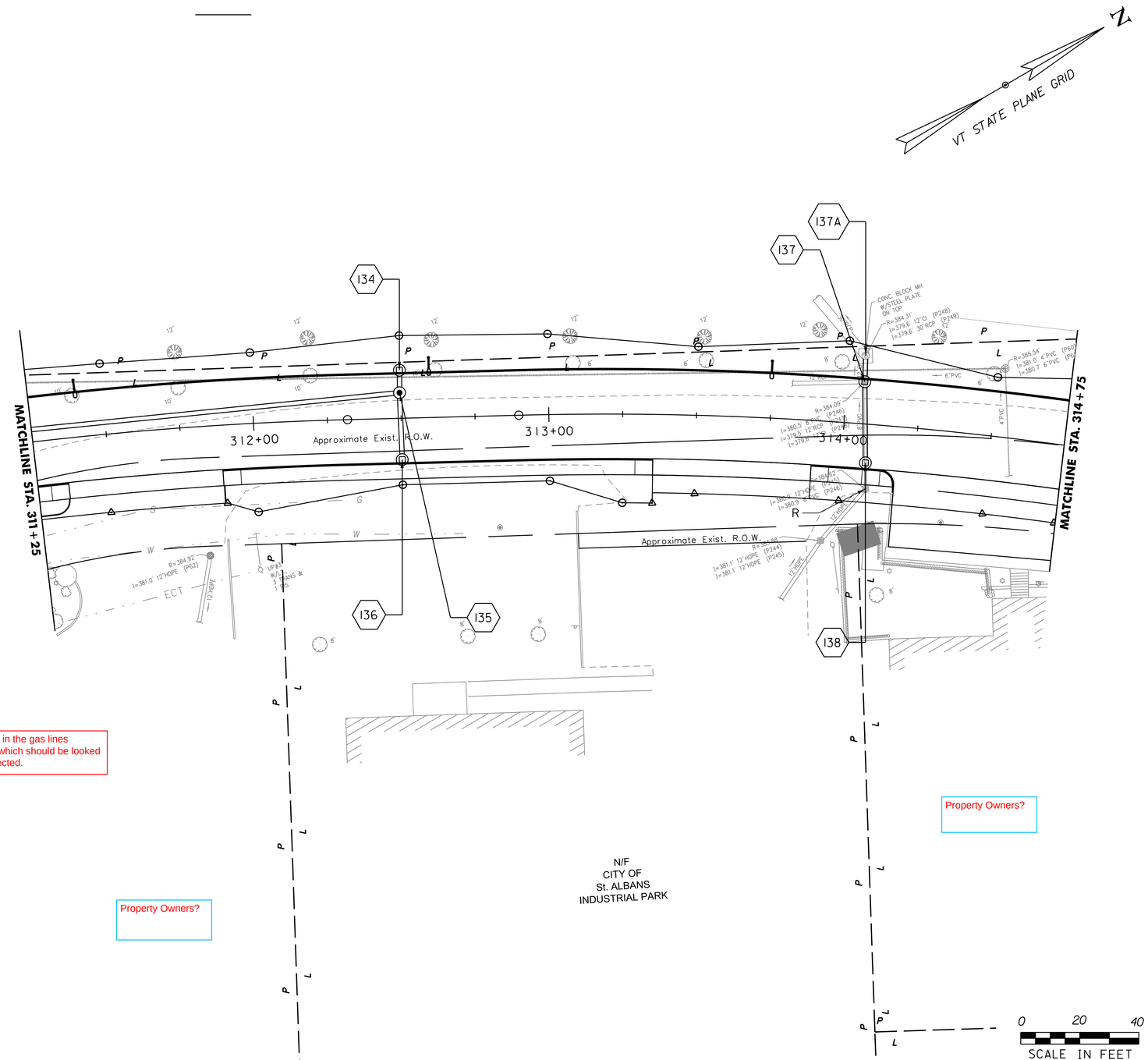

PROJECT NAME: ST. ALBANS
PROJECT NUMBER: HPP 8000(17)

FILE NAME: 57414_BDR_NUI_UT.dgn
PROJECT LEADER: J. D. SALADINO
DESIGNED BY: D. M. PECK
GENERAL PLANS (6 OF 17)

PLOT DATE: 3/4/2016
DRAWN BY: C.J. HAKEY
CHECKED BY: ------
SHEET 82 OF 230

VHB 57414.00

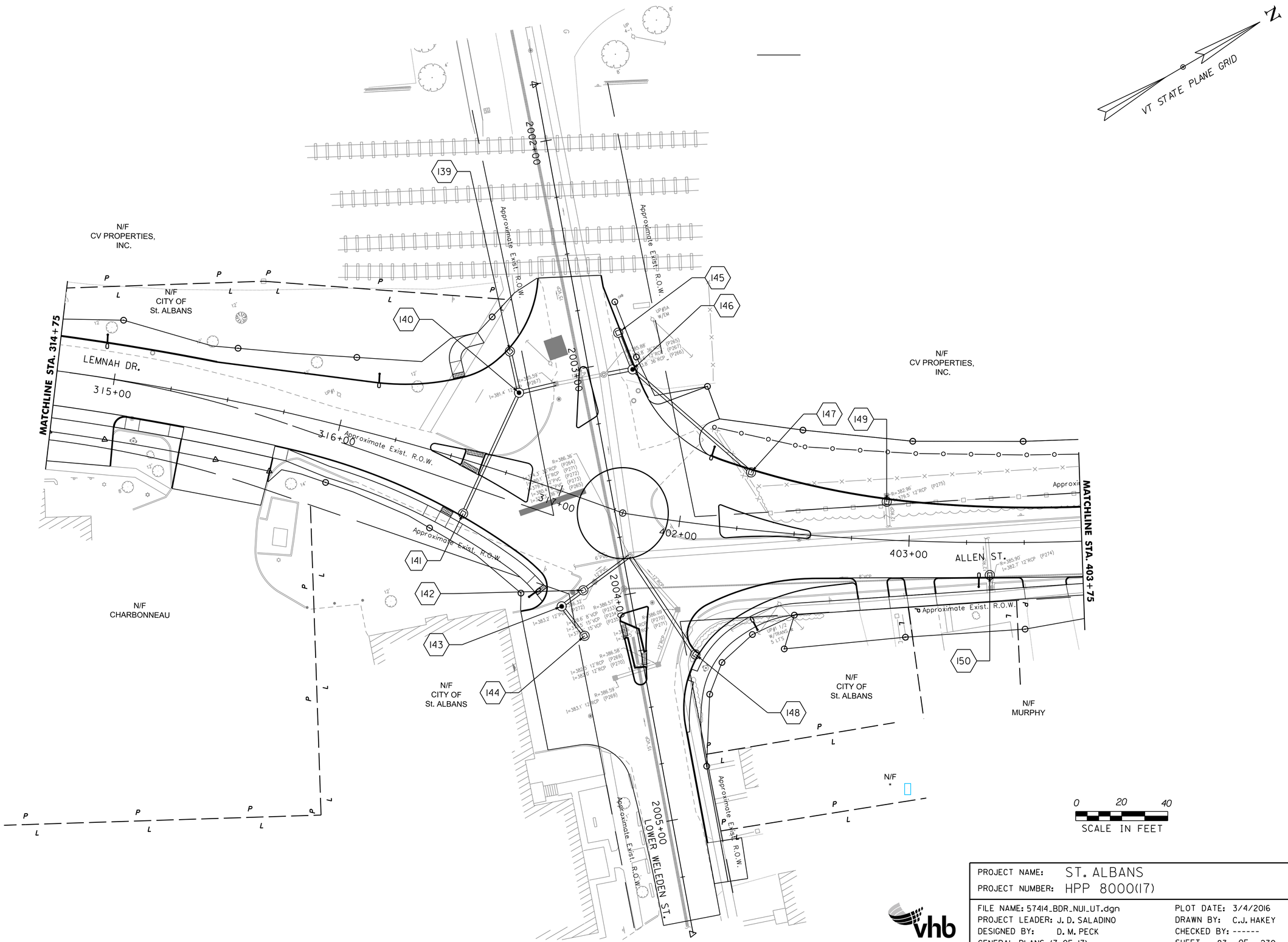

PROJECT NAME:	ST. ALBANS
PROJECT NUMBER:	HPP 8000(17)

FILE NAME: 57414_BDR_NUI_UT.dgn	PLOT DATE: 3/4/2016
PROJECT LEADER: J. D. SALADINO	DRAWN BY: C.J. HAKEY
DESIGNED BY: D. M. PECK	CHECKED BY: ------
GENERAL PLANS (7 OF 17)	SHEET 83 OF 230

VHB 57414.00

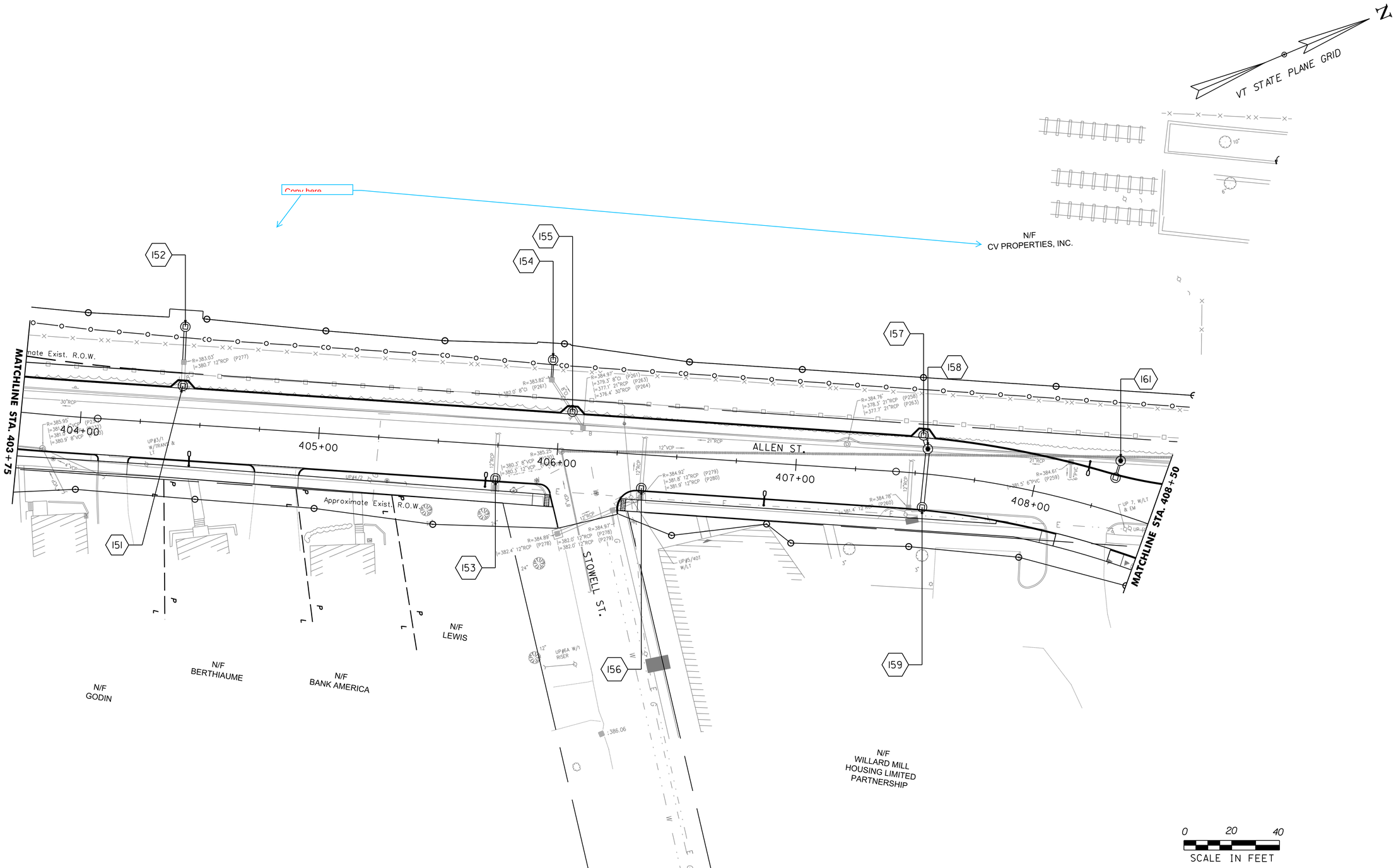

PROJECT NAME: ST. ALBANS	
PROJECT NUMBER: HPP 8000(17)	
FILE NAME: 57414_BDR_NUI_UT.dgn	PLOT DATE: 5/19/2016
PROJECT LEADER: J. D. SALADINO	DRAWN BY: C.J. HAKEY
DESIGNED BY: D. M. PECK	CHECKED BY: ------
GENERAL PLANS (8 OF 17)	SHEET 82 OF 211

VHB 57414.00

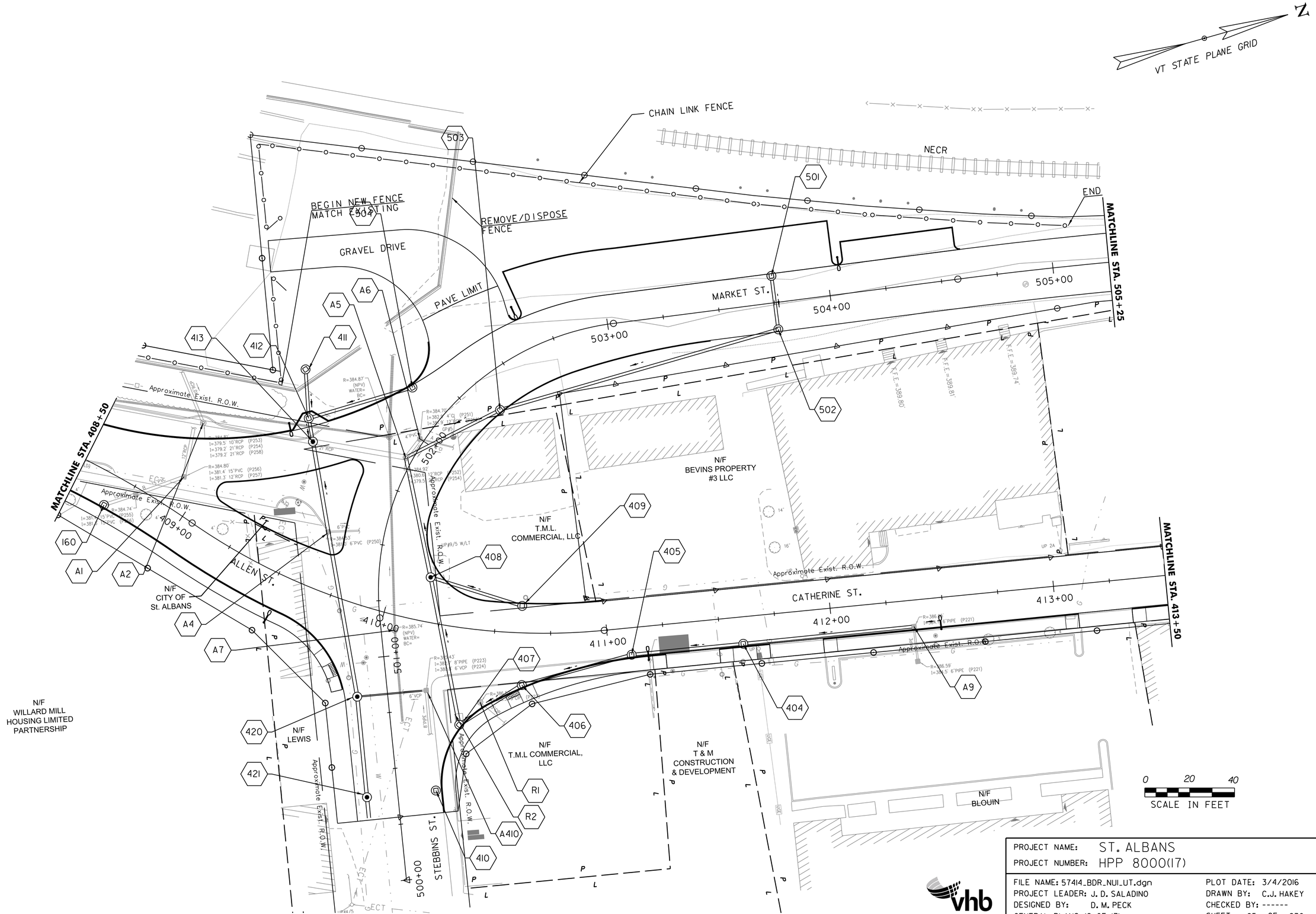

PROJECT NAME: ST. ALBANS	
PROJECT NUMBER: HPP 8000(17)	
FILE NAME: 57414_BDR_NUI_UT.dgn	PLOT DATE: 3/4/2016
PROJECT LEADER: J. D. SALADINO	DRAWN BY: C.J. HAKEY
DESIGNED BY: D. M. PECK	CHECKED BY: ------
GENERAL PLANS (9 OF 17)	SHEET 85 OF 230

VHB 57414.00

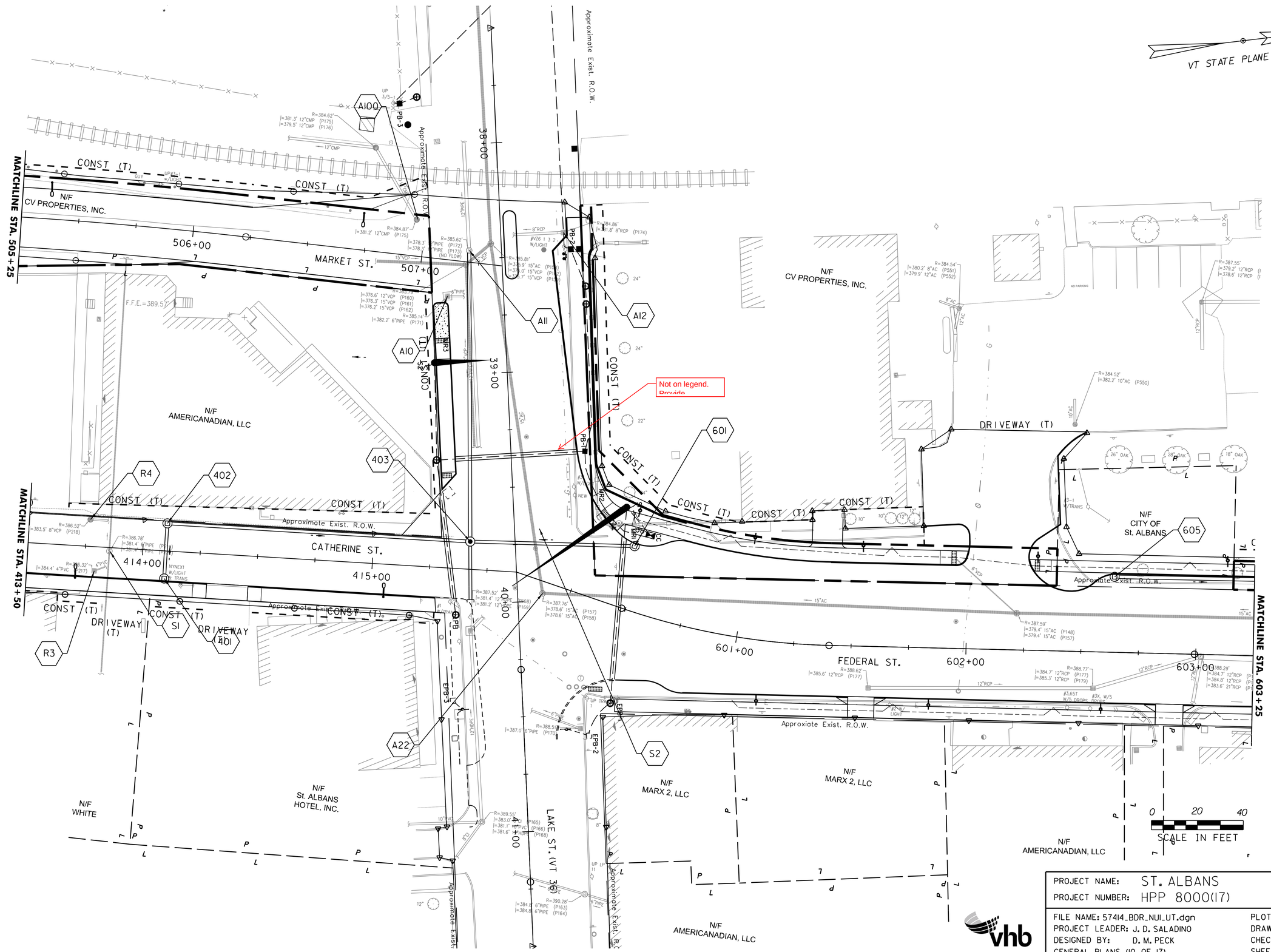

PROJECT NAME:	ST. ALBANS
PROJECT NUMBER:	HPP 8000(17)

FILE NAME: 57414_BDR_NUI_UT.dgn	PLOT DATE: 5/19/2016
PROJECT LEADER: J. D. SALADINO	DRAWN BY: C.J. HAKEY
DESIGNED BY: D. M. PECK	CHECKED BY: ------
GENERAL PLANS (10 OF 17)	SHEET 84 OF 211

VHB 57414.00

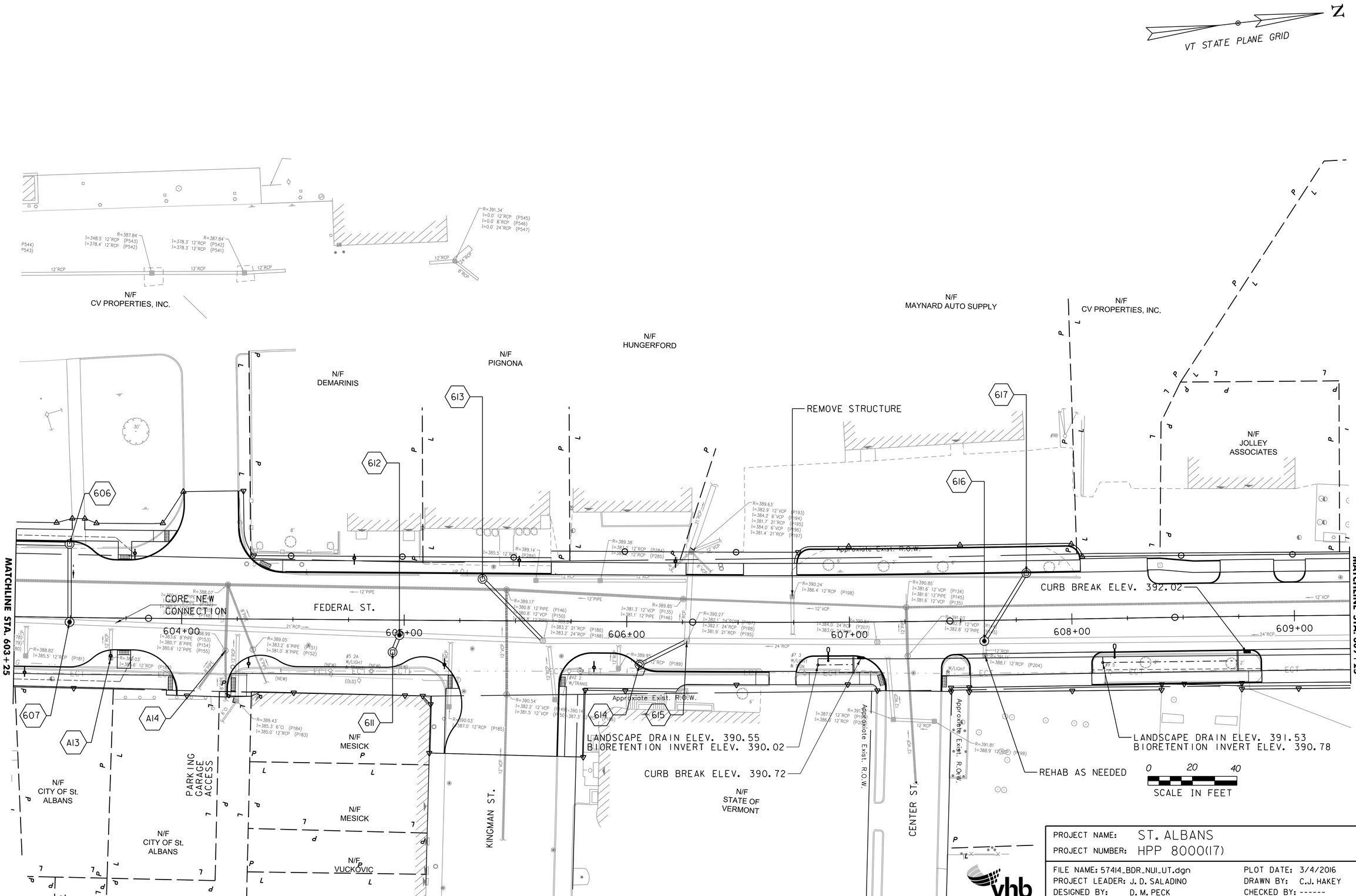

PROJECT NAME: ST. ALBANS	
PROJECT NUMBER: HPP 8000(17)	
FILE NAME: 57414_BDR_NUI_UT.dgn	PLOT DATE: 3/4/2016
PROJECT LEADER: J. D. SALADINO	DRAWN BY: C.J. HAKEY
DESIGNED BY: D. M. PECK	CHECKED BY: ------
GENERAL PLANS (11 OF 17)	SHEET 87 OF 230

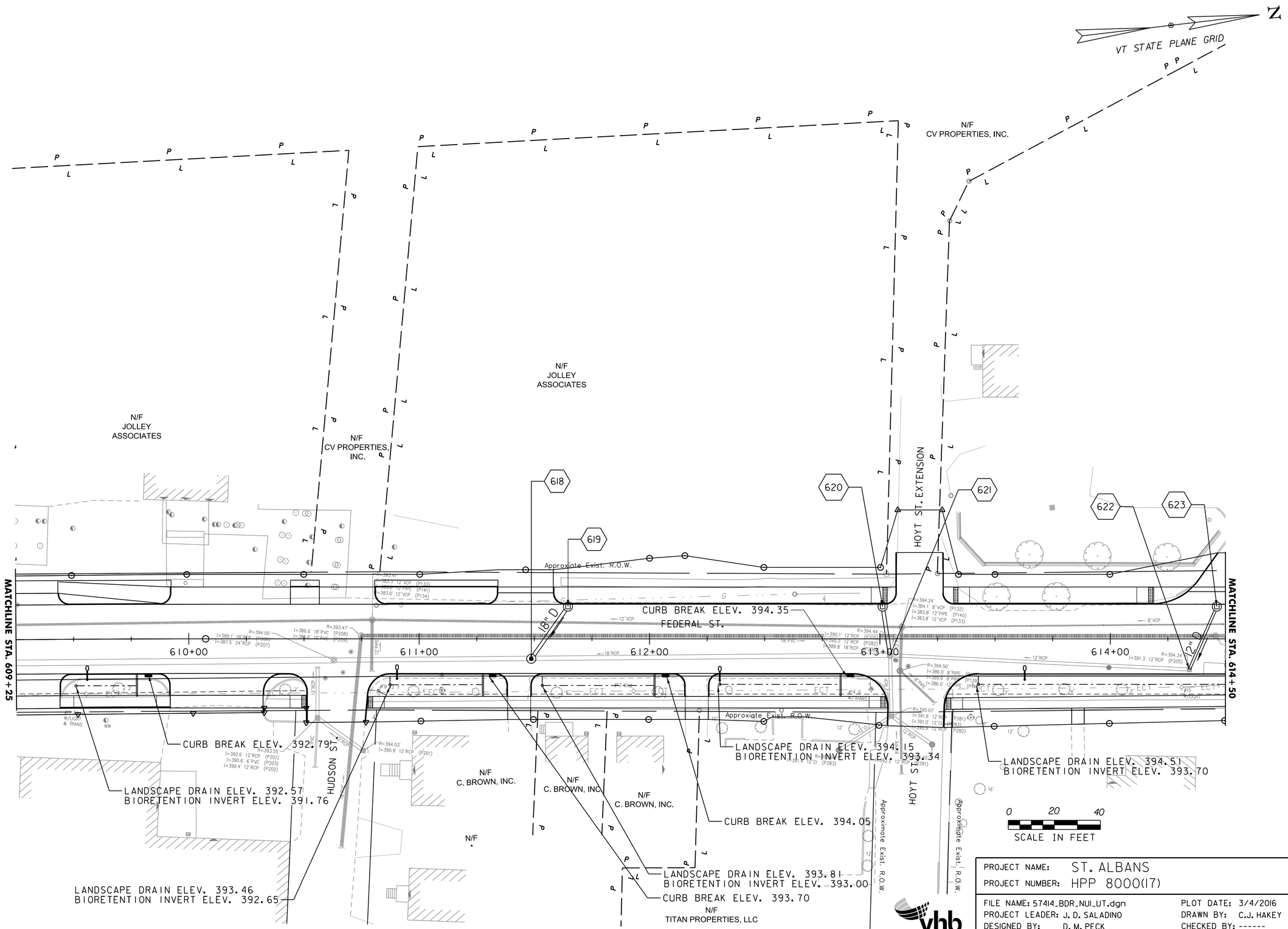

PROJECT NAME: ST. ALBANS	
PROJECT NUMBER: HPP 8000(17)	
FILE NAME: 57414_BDR_NUI_UT.dgn	PLOT DATE: 3/4/2016
PROJECT LEADER: J. D. SALADINO	DRAWN BY: C.J. HAKEY
DESIGNED BY: D. M. PECK	CHECKED BY: ------
GENERAL PLANS (12 OF 17)	SHEET 88 OF 230

vhb

VHB 57414.00

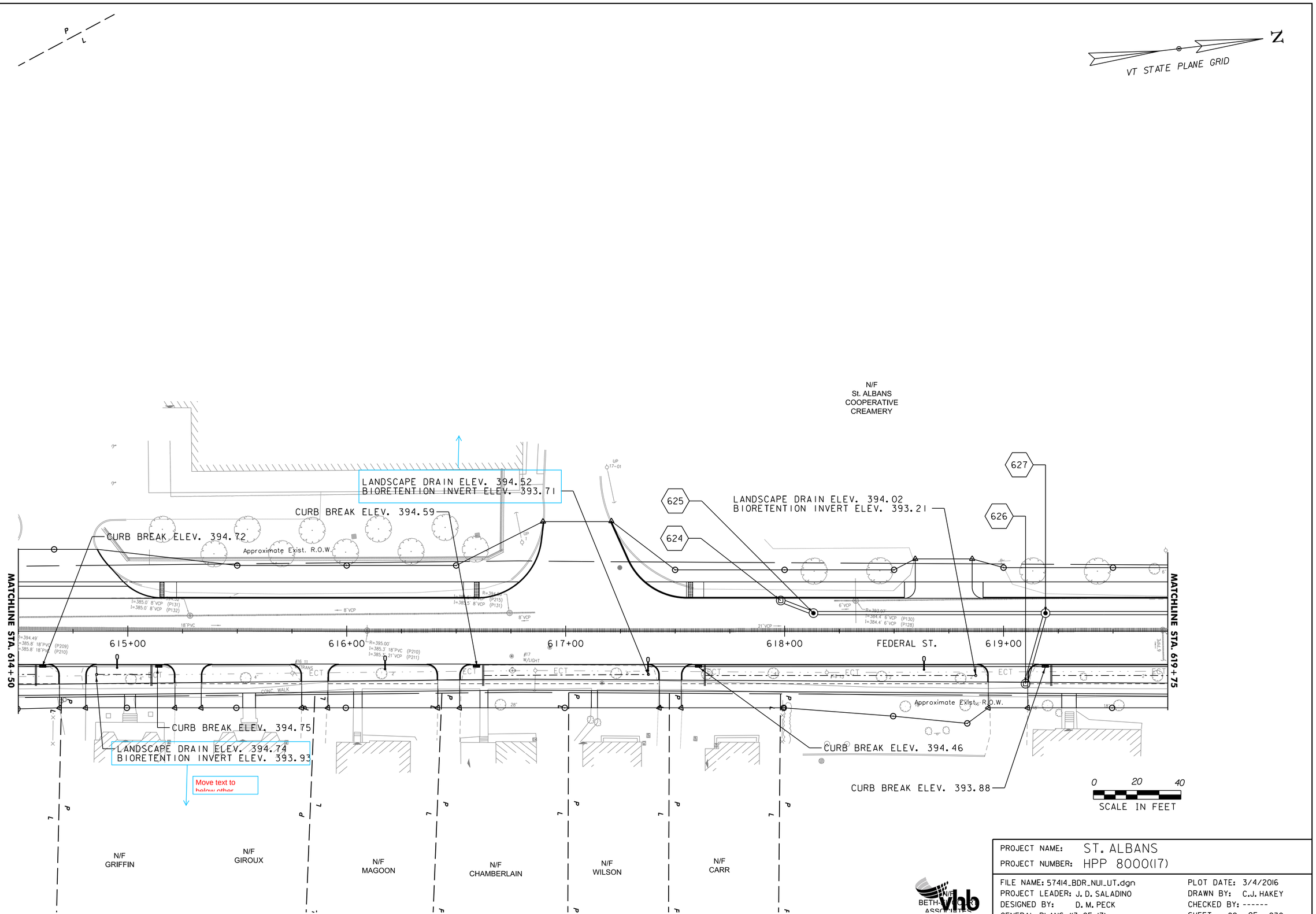

PROJECT NAME: ST. ALBANS
PROJECT NUMBER: HPP 8000(17)

FILE NAME: 57414_BDR_NUI_UT.dgn
PROJECT LEADER: J. D. SALADINO
DESIGNED BY: D. M. PECK
GENERAL PLANS (13 OF 17)

PLOT DATE: 3/4/2016
DRAWN BY: C.J. HAKEY
CHECKED BY: ------
SHEET 89 OF 230

VHB 57414.00

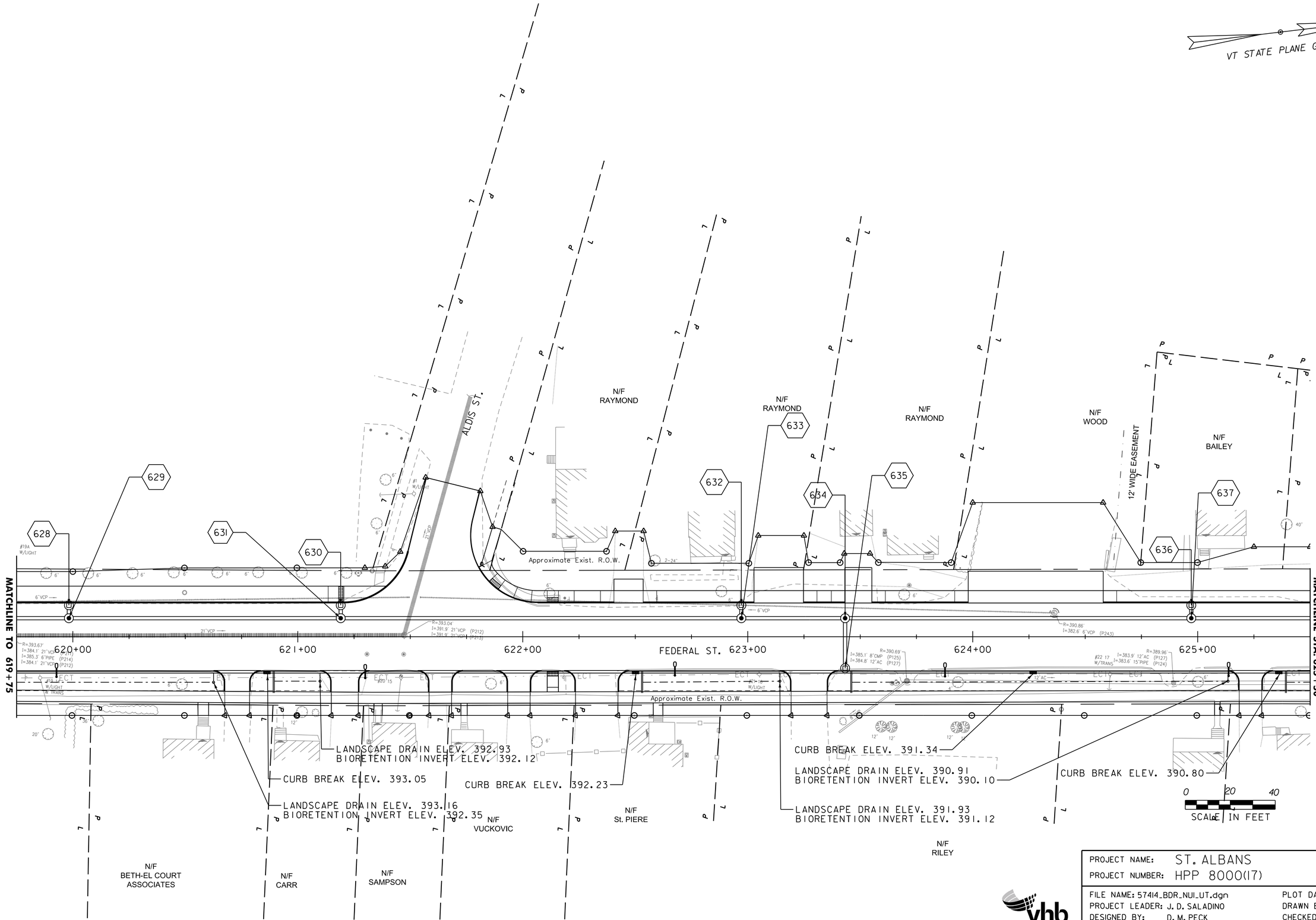

PROJECT NAME: ST. ALBANS
PROJECT NUMBER: HPP 8000(17)

FILE NAME: 57414_BDR_NUI_UT.dgn
PROJECT LEADER: J. D. SALADINO
DESIGNED BY: D. M. PECK
GENERAL PLANS (14 OF 17)

PLOT DATE: 3/4/2016
DRAWN BY: C.J. HAKEY
CHECKED BY: ------
SHEET 90 OF 230

VHB 57414.00

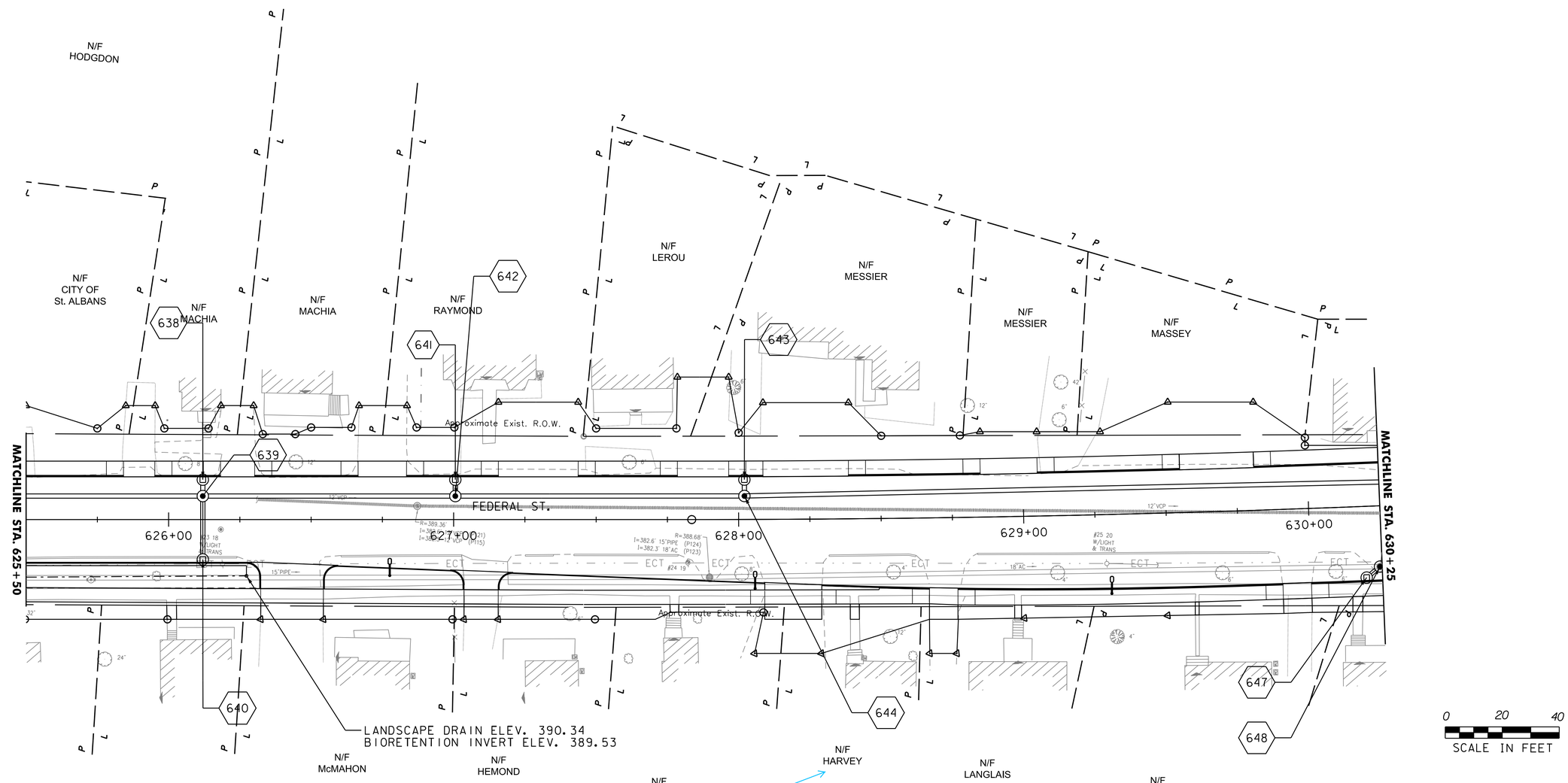

PROJECT NAME:	ST. ALBANS
PROJECT NUMBER:	HPP 8000(17)

FILE NAME: 57414_BDR_NUI_UT.dgn	PLOT DATE: 3/4/2016
PROJECT LEADER: J. D. SALADINO	DRAWN BY: C.J. HAKEY
DESIGNED BY: D. M. PECK	CHECKED BY: ------
GENERAL PLANS (15 OF 17)	SHEET 91 OF 230

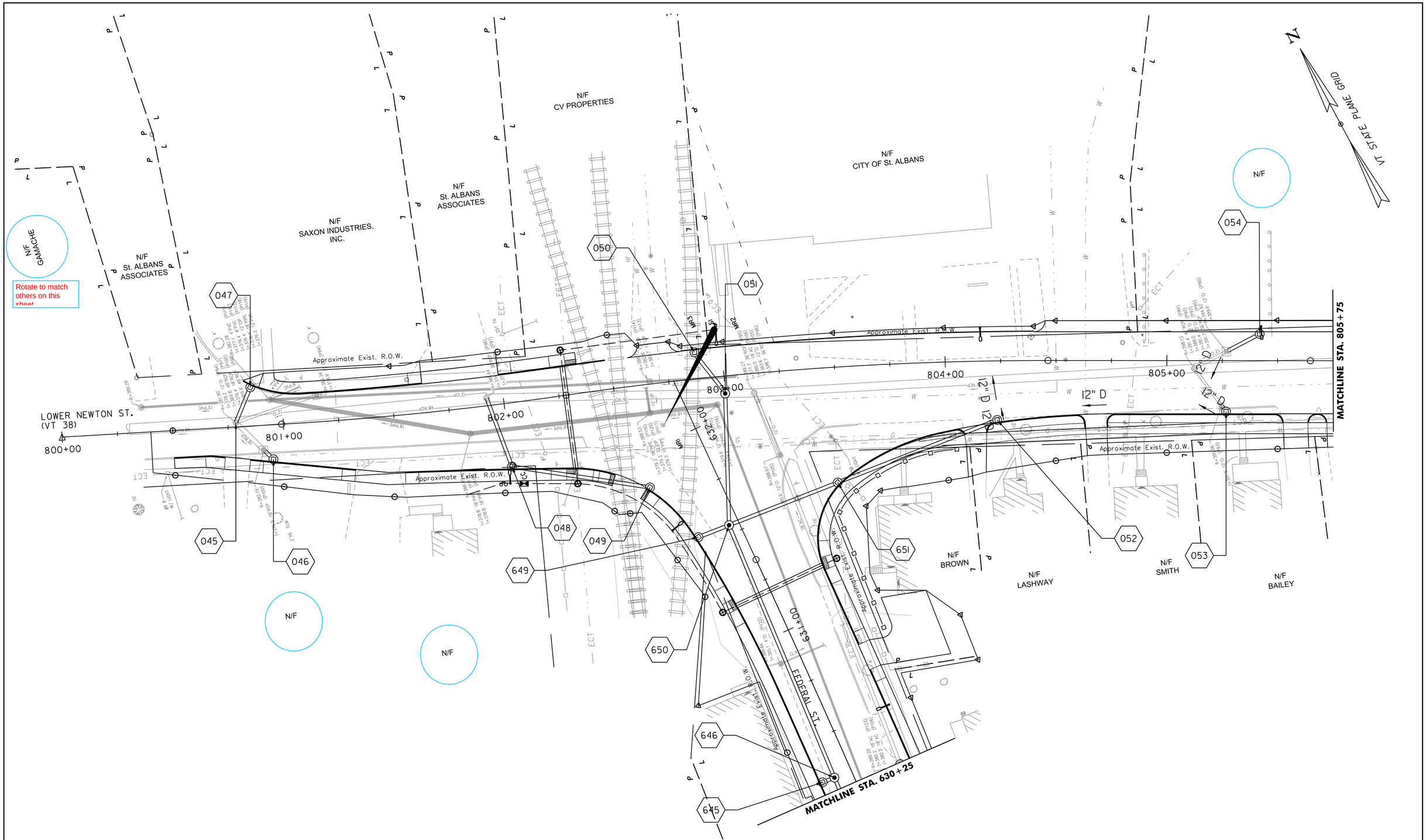

PROJECT NAME: ST. ALBANS	
PROJECT NUMBER: HPP 8000(17)	
FILE NAME: 57414_BDR_NUI_UT.dgn	PLOT DATE: 3/4/2016
PROJECT LEADER: J. D. SALADINO	DRAWN BY: C.J. HAKEY
DESIGNED BY: D. M. PECK	CHECKED BY: ------
GENERAL PLANS (16 OF 17)	SHEET 92 OF 230

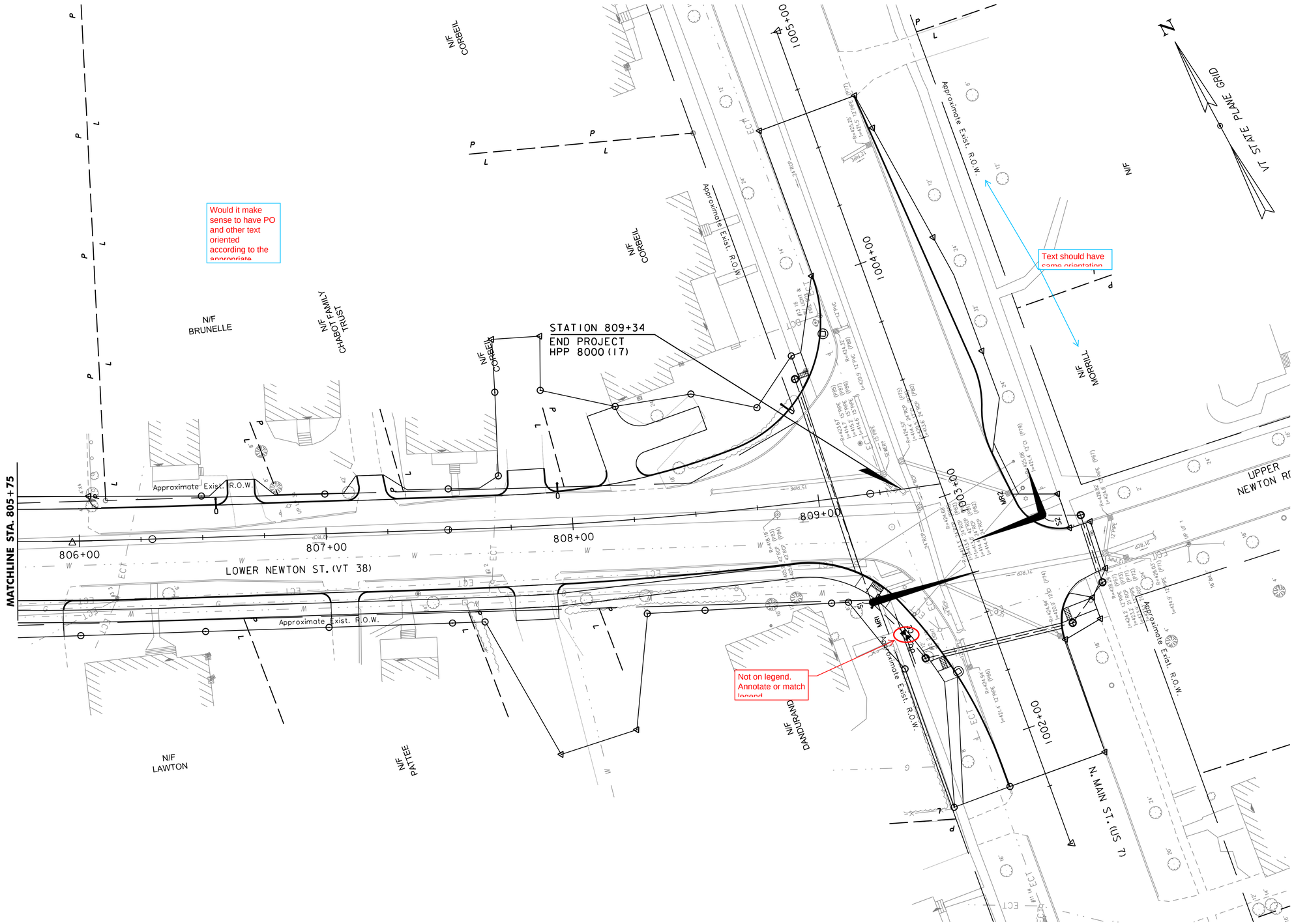

0 20 40
SCALE IN FEET

vhb

PROJECT NAME: ST. ALBANS	
PROJECT NUMBER: HPP 8000(17)	
FILE NAME: 57414_BDR_NUI_UT.dgn	PLOT DATE: 3/4/2016
PROJECT LEADER: J. D. SALADINO	DRAWN BY: C.J. HAKEY
DESIGNED BY: D. M. PECK	CHECKED BY: ------
GENERAL PLANSS (17 OF 17)	SHEET 93 OF 230

VHB 57414.00

CONSTRUCTION NOTES:

DURABLE 4" SINGLE YELLOW LINE
STA. 3000+50 - 3001+59, RT.
STA. 3000+50 - 3001+59, LT.
STA. 100+51 - 101+50, LT. & RT.

DURABLE 4" SINGLE WHITE LINE
STA. 3000+50 - STA. 3001+57, RT.
STA. 3000+50 - STA. 3001+57, RT.
STA. 899+00 - STA. 901+08, RT.
STA. 899+00 - STA. 901+25, RT.
STA. 902+47 - STA. 903+71, LT.
STA. 100+54 - STA. 101+85, LT.
STA. 100+54 - STA. 101+85, LT.
STA. 100+54 - STA. 101+85, RT.

DURABLE 4" DOUBLE YELLOW LINE
STA. 899+20 - 901+29, LT. & RT.
STA. 902+42 - 904+25, LT. & RT.
STA. 101+50 - 101+85, LT. & RT.

DURABLE 24" STOP BAR
STA. 3001+58, RT.
STA. 901+25, RT.
STA. 902+46, LT.
STA. 100+52, LT.

DURABLE CROSSWALK MARKING
STA. 3001+67 - 3001+67, LT. - RT.
STA. 100+37 - 100+47, LT. - RT.

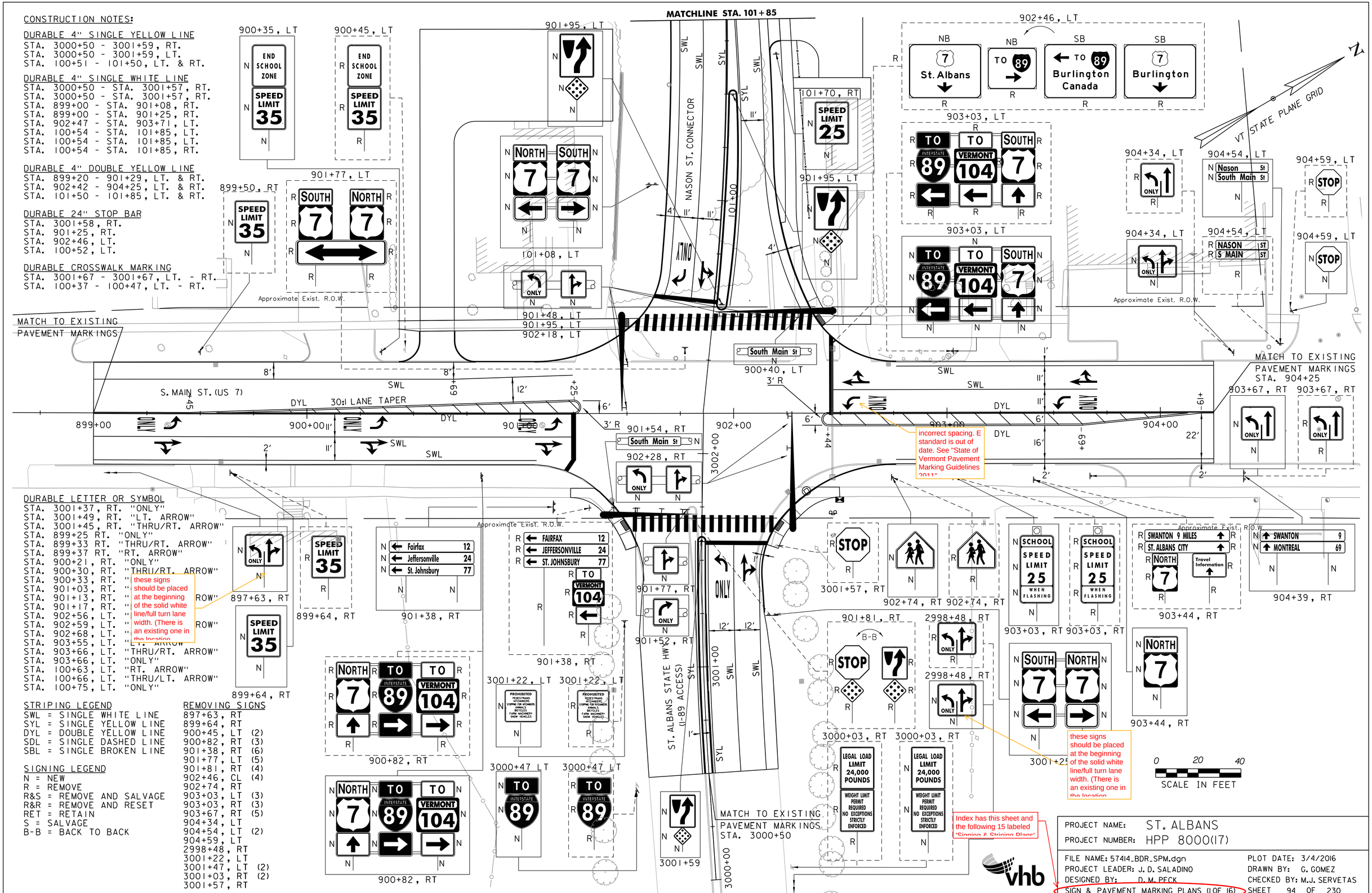

DURABLE LETTER OR SYMBOL
STA. 3001+37, RT. "ONLY"
STA. 3001+49, RT. "LT. ARROW"
STA. 3001+45, RT. "THRU/RT. ARROW"
STA. 899+25 RT. "ONLY"
STA. 899+33 RT. "THRU/RT. ARROW"
STA. 899+37 RT. "RT. ARROW"
STA. 900+21, RT. "ONLY"
STA. 900+30, RT. "THRU/RT. ARROW"
STA. 900+33, RT. "
STA. 901+03, RT. " ROW"
STA. 901+13, RT. "
STA. 901+17, RT. "
STA. 902+56, LT. "
STA. 902+59, LT. " ROW"
STA. 902+68, LT. "
STA. 903+55, LT. "
STA. 903+66, LT. "THRU/RT. ARROW"
STA. 903+66, LT. "ONLY"
STA. 100+63, LT. "RT. ARROW"
STA. 100+66, LT. "THRU/LT. ARROW"
STA. 100+75, LT. "ONLY"

STRIPING LEGEND
SWL = SINGLE WHITE LINE
SYL = SINGLE YELLOW LINE
DYL = DOUBLE YELLOW LINE
SDL = SINGLE DASHED LINE
SBL = SINGLE BROKEN LINE

SIGNING LEGEND
N = NEW
R = REMOVE
R&S = REMOVE AND SALVAGE
R&R = REMOVE AND RESET
RET = RETAIN
S = SALVAGE
B-B = BACK TO BACK

REMOVING SIGNS
897+63, RT
899+64, RT
900+45, LT (2)
900+82, RT (3)
901+38, RT (6)
901+77, LT (5)
901+81, RT (4)
902+46, CL (4)
902+74, RT
903+03, LT (3)
903+03, RT (3)
903+67, RT (5)
904+34, LT
904+54, LT (2)
904+59, LT
2998+48, RT
3001+22, LT
3001+47, LT (2)
3001+03, RT (2)
3001+57, RT

PROJECT NAME: ST. ALBANS
PROJECT NUMBER: HPP 8000(17)

FILE NAME: 57414_BDR_SPM.dgn
PROJECT LEADER: J. D. SALADINO
DESIGNED BY: D. M. PECK
SIGN & PAVEMENT MARKING PLANS (1 OF 16)

PLOT DATE: 3/4/2016
DRAWN BY: G. GOMEZ
CHECKED BY: M.J. SERVETAS
SHEET 94 OF 230

VHB 57414.00

CONSTRUCTION NOTES:

DURABLE 4" SINGLE YELLOW LINE
STA. 101+75 - 102+92, LT. & RT.

DURABLE 4" SINGLE WHITE LINE
STA. 101+85 - 102+53, LT.
STA. 101+85 - 107+00, LT. & RT.

DURABLE 4" DOUBLE YELLOW LINE
STA. 101+85 - 102+52, LT. & RT.
STA. 102+52 - 106+92, CL.
STA. 106+92 - 107+00, LT. & RT.

DURABLE LETTER OR SYMBOL
STA. 102+36, LT. (RT. ARROW)
STA. 102+47, LT. (THRU/LT. ARROW)
STA. 102+49, LT. ("ONLY")

STRIPING LEGEND
SWL = SINGLE WHITE LINE
SYL = SINGLE YELLOW LINE
DYL = DOUBLE YELLOW LINE
SDL = SINGLE DASHED LINE
SBL = SINGLE BROKEN LINE

SIGNING LEGEND
N = NEW
R = REMOVE
R&S = REMOVE AND SALVAGE
R&R = REMOVE AND RESET
RET = RETAIN
S = SALVAGE
B-B = BACK TO BACK

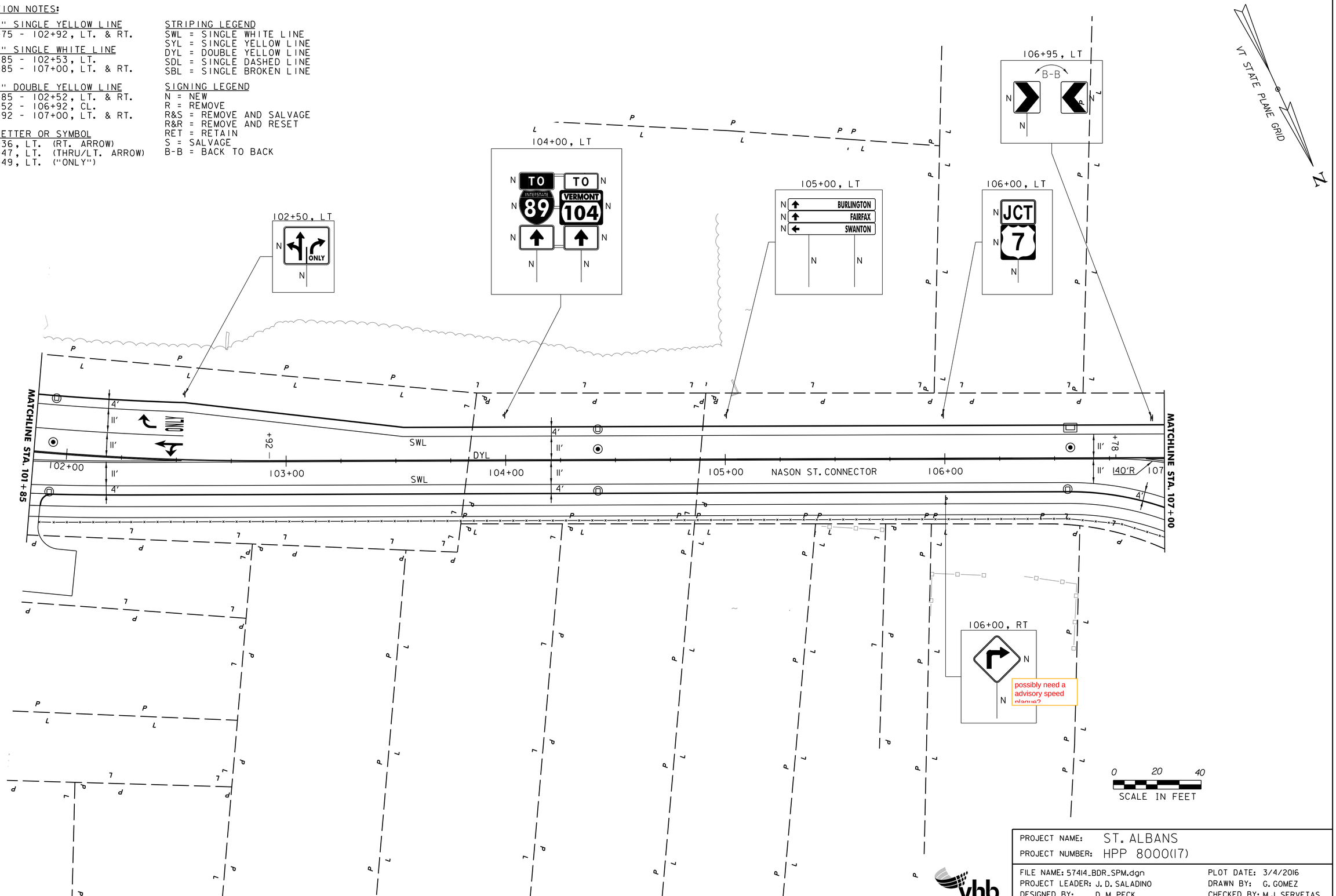

PROJECT NAME: ST. ALBANS
PROJECT NUMBER: HPP 8000(17)

FILE NAME: 57414_BDR_SPM.dgn
PROJECT LEADER: J. D. SALADINO
DESIGNED BY: D. M. PECK
SIGN & PAVEMENT MARKING PLANS (2 OF 16)

PLOT DATE: 3/4/2016
DRAWN BY: G. GOMEZ
CHECKED BY: M.J. SERVETAS
SHEET 95 OF 230

CONSTRUCTION NOTES:

DURABLE 4" SINGLE WHITE LINE
STA. 107+00 - 109+97, LT.
STA. 106+75 - 110+26, RT.
STA. 109+30 - 110+26, RT.
STA. 201+50 - 202+56, RT.
STA. 201+50 - 202+57, LT.
STA. 202+66 - 203+48, LT.
STA. 202+67 - 203+48, RT.
STA. 300+42 - 302+50, LT. & RT.
STA. 300+42 - 302+50, LT.

DURABLE 4" DOUBLE YELLOW LINE
STA. 107+00 - 110+26, CL.
STA. 201+50 - 202+56, CL.
STA. 202+66 - 203+51, CL.
STA. 204+37 - 204+85, CL.
STA. 300+42 - 301+72, CL.
STA. 301+72 - 302+50. LT. & RT.

DURABLE LETTER OR SYMBOL
STA. 109+34, RT. ("ONLY")
STA. 109+46, RT. (LT. ARROW)
STA. 110+10, RT. ("ONLY")
STA. 110+22, RT. (LT. ARROW)
STA. 300+51, LT. "LT. ARROW"
STA. 300+63, LT. "ONLY"
STA. 301+52, LT. "LT. ARROW"
STA. 301+64, LT. "ONLY"

DURABLE 24" STOP BAR
STA. 203+50, RT.
STA. 204+38, LT.

DURABLE CROSSWALK MARKING
STA. 202+47 - 202+46, LT. - RT.
STA. 204+25 - 204+33, LT. - RT.
STA. 300+34 - 300+42, LT. - RT.

REMOVING SIGNS
STA. 300+30, LT (3)

STRIPING LEGEND
SWL = SINGLE WHITE LINE
SYL = SINGLE YELLOW LINE
DYL = DOUBLE YELLOW LINE
SDL = SINGLE DASHED LINE
SBL = SINGLE BROKEN LINE

SIGNING LEGEND
N = NEW
R = REMOVE
R&S = REMOVE AND SALVAGE
R&R = REMOVE AND RESET
RET = RETAIN
S = SALVAGE
B-B = BACK TO BACK

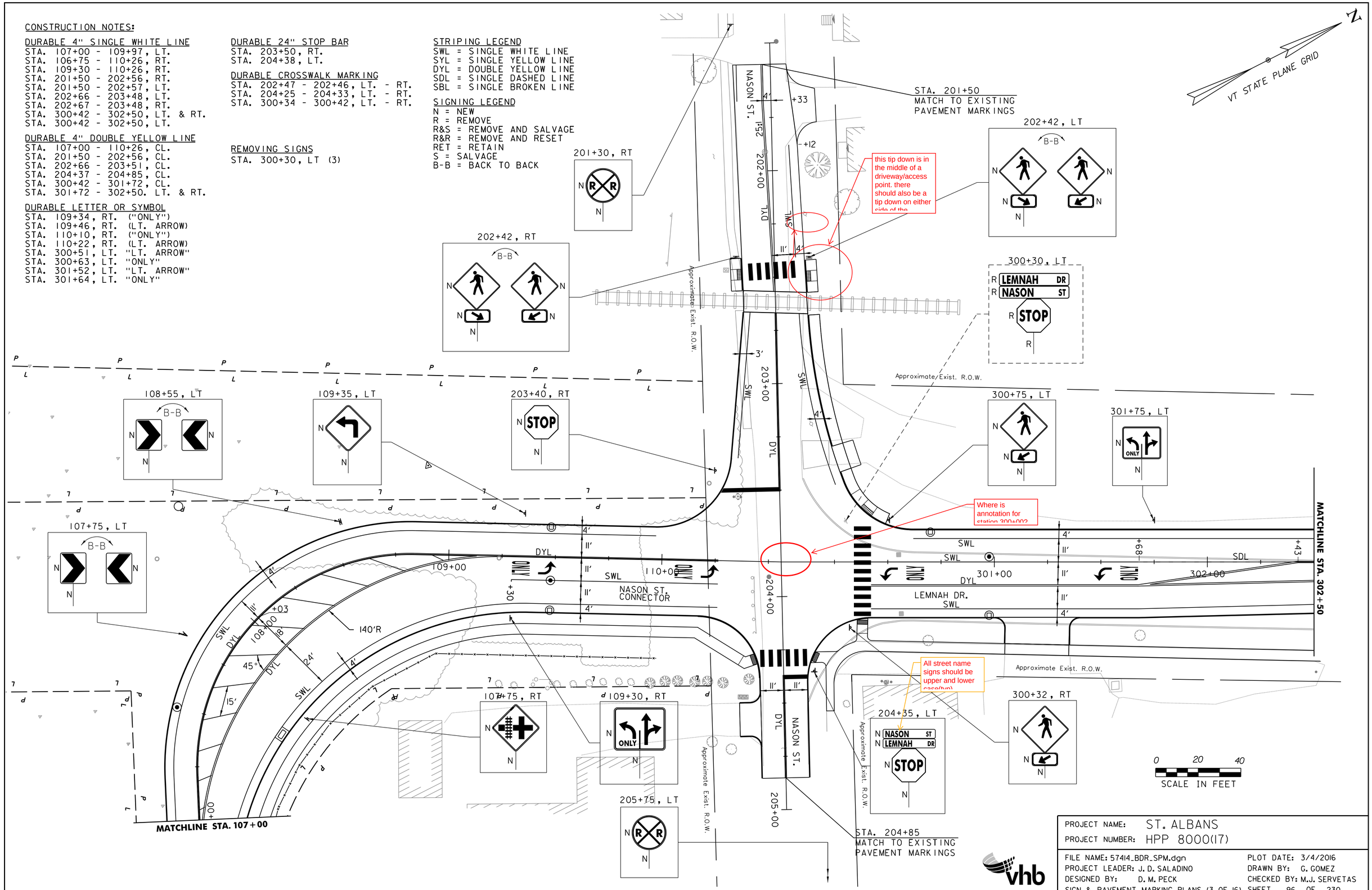

PROJECT NAME: ST. ALBANS	
PROJECT NUMBER: HPP 8000(17)	
FILE NAME: 57414_BDR_SPM.dgn	PLOT DATE: 3/4/2016
PROJECT LEADER: J. D. SALADINO	DRAWN BY: G. GOMEZ
DESIGNED BY: D. M. PECK	CHECKED BY: M.J. SERVETAS
SIGN & PAVEMENT MARKING PLANS (3 OF 16)	SHEET 96 OF 230

VHB 57414.00

CONSTRUCTION NOTES:

DURABLE 4" DOUBLE YELLOW LINE
STA. 302+50 - 305+81, LT. & RT.
STA. 305+81 - 308+25, CL.

DURABLE 4" SINGLE WHITE LINE
STA. 302+50 - 308+25, LT. & RT.
STA. 306+11 - 306+91, RT. (PARKING LOT)

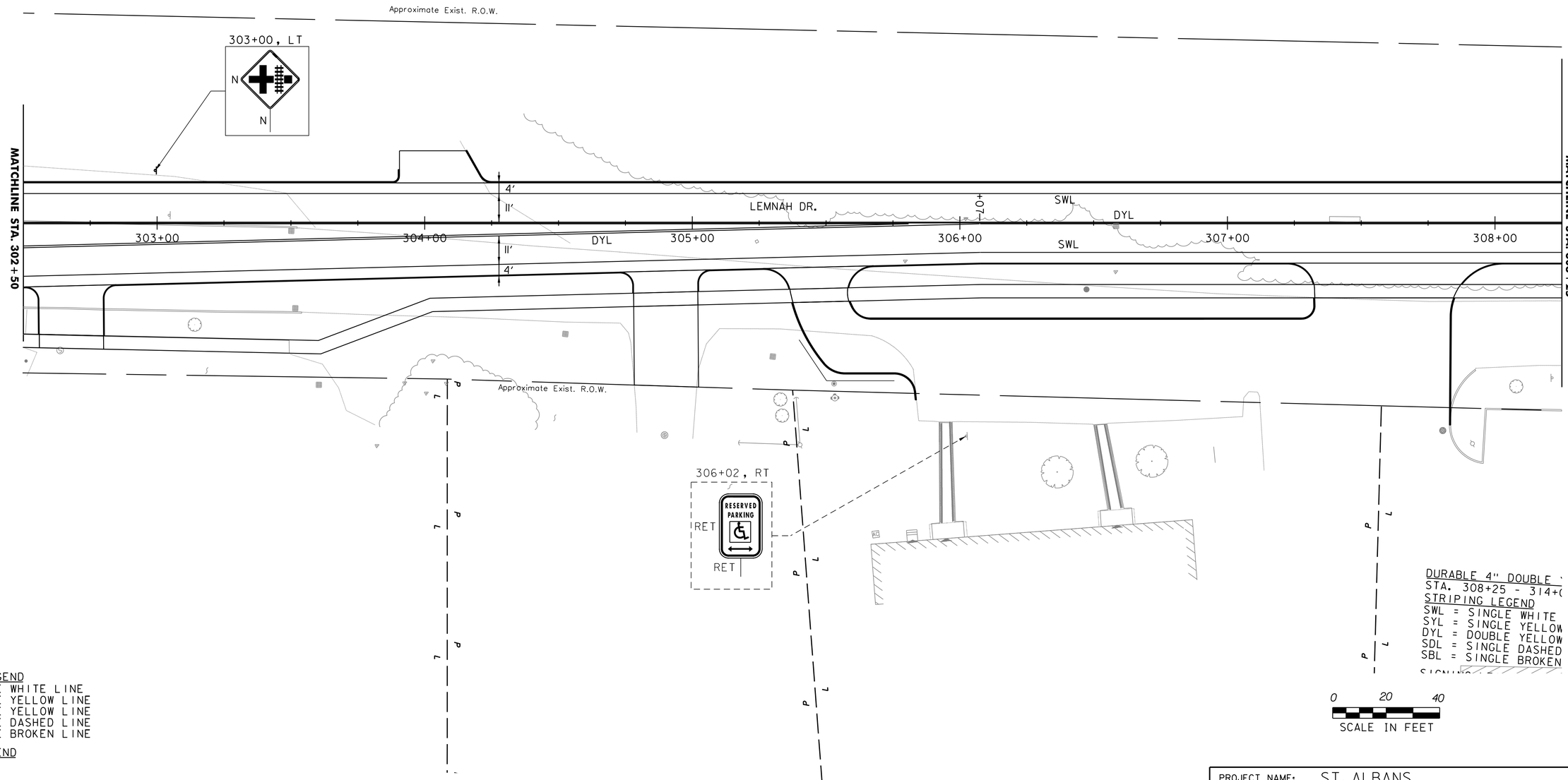

STRIPING LEGEND
SWL = SINGLE WHITE LINE
SYL = SINGLE YELLOW LINE
DYL = DOUBLE YELLOW LINE
SDL = SINGLE DASHED LINE
SBL = SINGLE BROKEN LINE

SIGNING LEGEND
N = NEW
R = REMOVE
R&S = REMOVE AND SALVAGE
R&R = REMOVE AND RESET
RET = RETAIN
S = SALVAGE
B-B = BACK TO BACK

PROJECT NAME: ST. ALBANS	
PROJECT NUMBER: HPP 8000(17)	
FILE NAME: 57414_BDR_SPM.dgn	PLOT DATE: 3/4/2016
PROJECT LEADER: J. D. SALADINO	DRAWN BY: G. GOMEZ
DESIGNED BY: D. M. PECK	CHECKED BY: M.J. SERVETAS
SIGN & PAVEMENT MARKING PLANS (4 OF 16)	SHEET 97 OF 230

VHB 57414.00

CONSTRUCTION NOTES:

DURABLE 4" SINGLE WHITE LINE
STA. 308+25 - 314+00, LT. & RT.
STA. 308+25 - 308+60, RT. (PARKING LOT)
STA. 308+86 - 308+94, RT. (PARKING SPOT)
STA. 310+25 - 311+03, RT. (PARKING LOT)

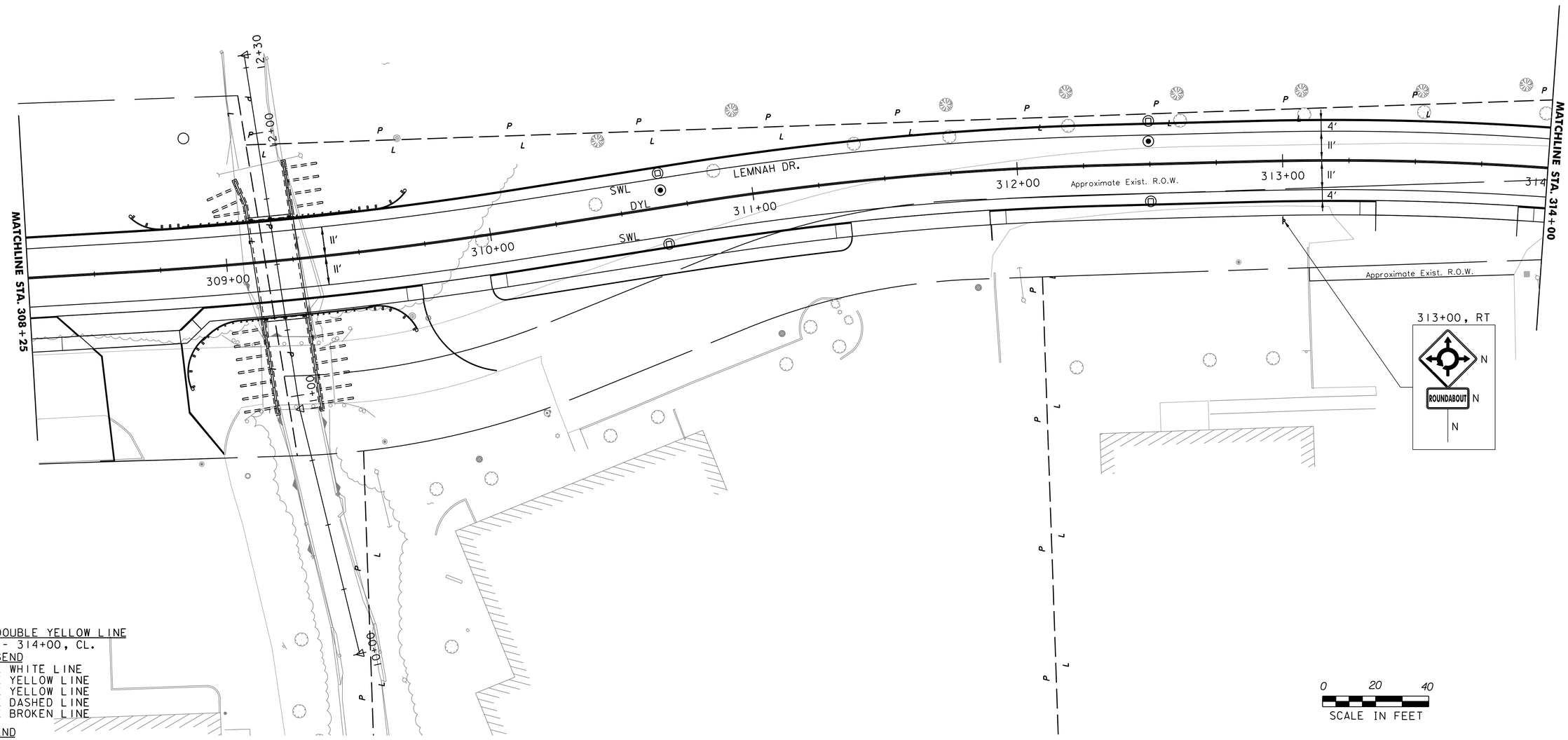

DURABLE 4" DOUBLE YELLOW LINE
STA. 308+25 - 314+00, CL.

STRIPING LEGEND
SWL = SINGLE WHITE LINE
SYL = SINGLE YELLOW LINE
DYL = DOUBLE YELLOW LINE
SDL = SINGLE DASHED LINE
SBL = SINGLE BROKEN LINE

SIGNING LEGEND
N = NEW
R = REMOVE
R&S = REMOVE AND SALVAGE
R&R = REMOVE AND RESET
RET = RETAIN
S = SALVAGE
B-B = BACK TO BACK

PROJECT NAME: ST. ALBANS	
PROJECT NUMBER: HPP 8000(17)	
FILE NAME: 57414_BDR_SPM.dgn	PLOT DATE: 3/4/2016
PROJECT LEADER: J. D. SALADINO	DRAWN BY: G. GOMEZ
DESIGNED BY: D. M. PECK	CHECKED BY: M.J. SERVETAS
SIGN & PAVEMENT MARKING PLANS (5 OF 16)	SHEET 98 OF 230

CONSTRUCTION NOTES:

DURABLE 4" SINGLE WHITE LINE
STA. 314+00 - 316+10, LT.
STA. 314+00 - 317+02, RT.
STA. 316+56 - 316+82, LT.
STA. 2002+67 - 2003+35, LT.
STA. 2002+93 - 2003+20, RT.
STA. 2004+05 - 2005+44, LT.
STA. 400+46 - 402+75, RT.
STA. 400+37 - 402+75, LT.

DURABLE 4" SINGLE YELLOW LINE
STA. 315+66 - 316+91, LT.
STA. 315+66 - 316+90, RT.
STA. 316+56 - 316+73, LT.
STA. 2002+60 - 2003+25, LT.
STA. 2002+60 - 2003+28, RT.
STA. 2003+45 - 2003+86 (ROUNDABOUT)
STA. 2004+05 - 2005+12, LT.
STA. 2004+17 - 2005+12, RT.
STA. 400+47 - 401+83, LT. & RT.

DURABLE 4" DOUBLE YELLOW LINE
STA. 314+00 - 315+66, CL.
STA. 2005+12 - 2005+44, CL.
STA. 401+83 - 402+75, CL.

DURABLE CROSSWALK MARKING
STA. 316+55 - 316+63, RT.
STA. 316+55 - 316+63, LT.
STA. 2003+92 - 2004+17, RT.
STA. 2004+26 - 2004+42, LT.

REMOVING SIGNS
STA. 317+05, RT (3)
STA. 401+98, RT (2)
STA. 402+72, RT
STA. 403+95, LT (2)

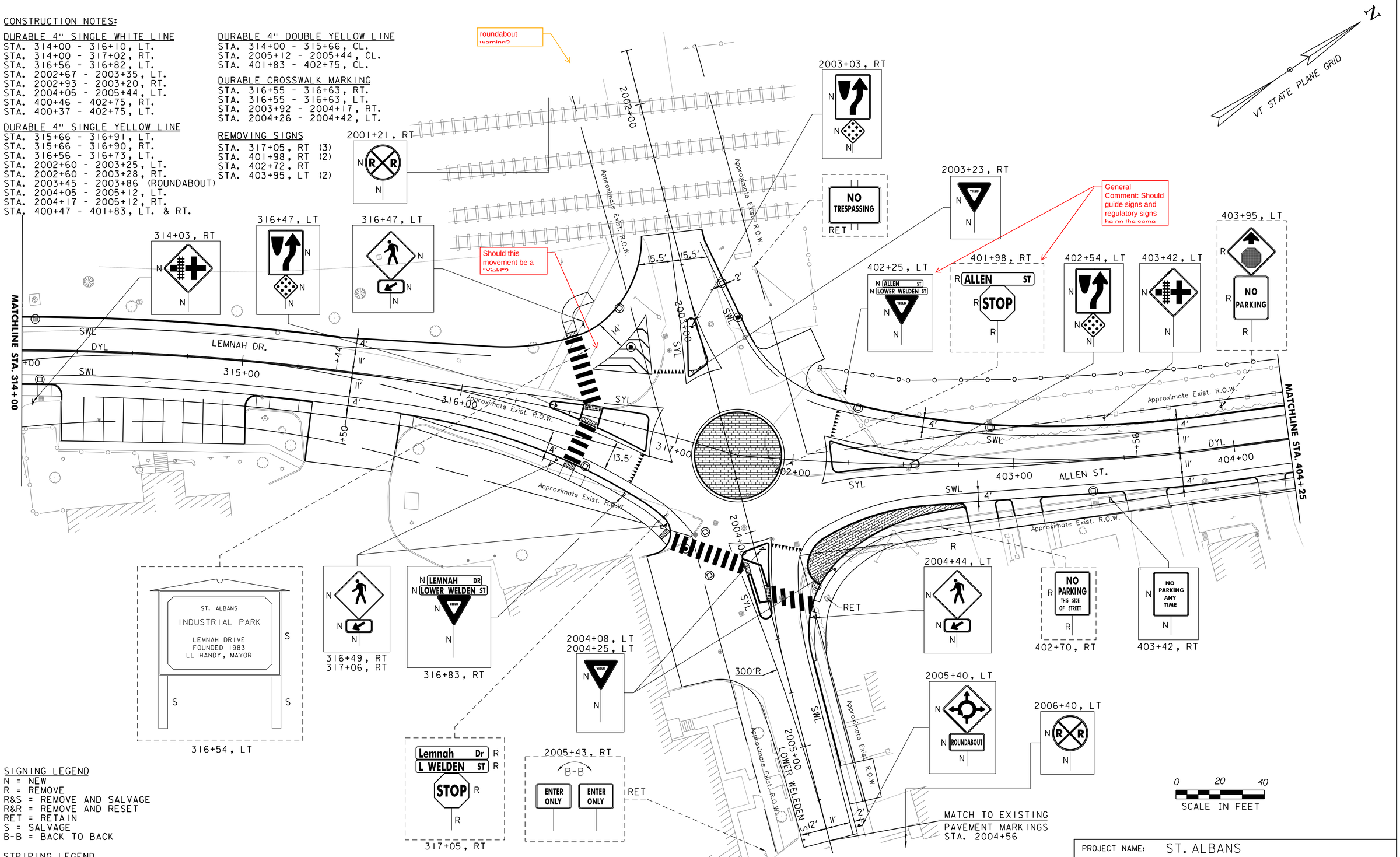

SIGNING LEGEND
N = NEW
R = REMOVE
R&S = REMOVE AND SALVAGE
R&R = REMOVE AND RESET
RET = RETAIN
S = SALVAGE
B-B = BACK TO BACK

STRIPING LEGEND
SWL = SINGLE WHITE LINE
SYL = SINGLE YELLOW LINE
DYL = DOUBLE YELLOW LINE
SDL = SINGLE DASHED LINE
SBL = SINGLE BROKEN LINE

vhb

PROJECT NAME: ST. ALBANS	
PROJECT NUMBER: HPP 8000(17)	
FILE NAME: 57414_BDR_SPM.dgn	PLOT DATE: 3/4/2016
PROJECT LEADER: J. D. SALADINO	DRAWN BY: G. GOMEZ
DESIGNED BY: D. M. PECK	CHECKED BY: M.J. SERVETAS
SIGN & PAVEMENT MARKING PLANS (6 OF 16)	SHEET 99 OF 230

CONSTRUCTION NOTES:

DURABLE 4" DOUBLE YELLOW LINE
STA. 402+75 - 404+28, CL.
STA. 404+64 - 406+75, CL.

DURABLE 4" SINGLE WHITE LINE
STA. 402+75 - 404+28, RT.
STA. 404+64 - 406+75, RT.
STA. 402+75 - 406+75, LT.

DURABLE CROSSWALK MARKING
STA. 404+33 - 404+59, RT.

REMOVING SIGNS
STA. 404+66, RT (2)
STA. 406+16, RT
STA. 406+70, RT
STA. 406+74, RT

ERECTING SALVAGED SIGNS
STA. 406+74, RT

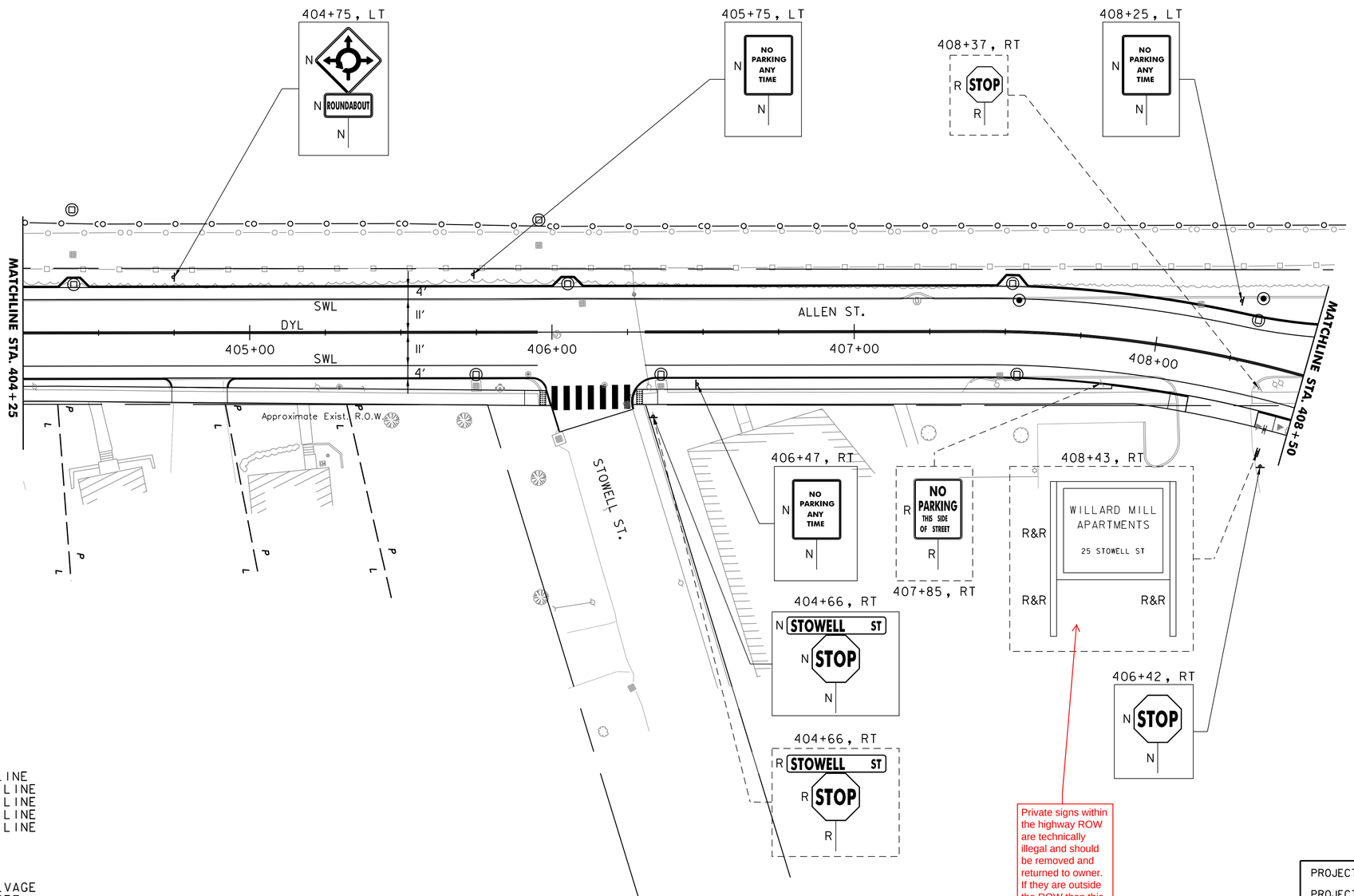

Private signs within the highway ROW are technically illegal and should be removed and returned to owner. If they are outside the ROW then this becomes an item that will need to addressed during the ROW phase with the owner.

STRIPING LEGEND
SWL = SINGLE WHITE LINE
SYL = SINGLE YELLOW LINE
DYL = DOUBLE YELLOW LINE
SDL = SINGLE DASHED LINE
SBL = SINGLE BROKEN LINE

SIGNING LEGEND
N = NEW
R = REMOVE
R&S = REMOVE AND SALVAGE
R&R = REMOVE AND RESET
RET = RETAIN
S = SALVAGE
B-B = BACK TO BACK

0 20 40
SCALE IN FEET

PROJECT NAME: ST. ALBANS	
PROJECT NUMBER: HPP 8000(17)	
FILE NAME: 57414_BDR_SPM.dgn	PLOT DATE: 3/4/2016
PROJECT LEADER: J. D. SALADINO	DRAWN BY: G. GOMEZ
DESIGNED BY: D. M. PECK	CHECKED BY: M.J. SERVETAS
SIGN & PAVEMENT MARKING PLANS (7 OF 16)	SHEET 100 OF 230

CONSTRUCTION NOTES:

DURABLE 4" DOUBLE YELLOW LINE
STA. 406+75 - 407+91, CL.
STA. 408+79 - 412+25, CL.
STA. 501+47 - 505+75, CL.

DURABLE 4" SINGLE YELLOW LINE
STA. 407+12 - 408+10, LT.

DURABLE 4" SINGLE WHITE LINE
STA. 406+75 - 408+11, LT.
STA. 407+11 - 408+02, LT.
STA .406+75 - 407+91, RT.
STA. 408+45 - 412+25, LT.
STA. 409+50 - 412+25, RT.
STA. 501+49 - 501+97, LT.
STA. 501+49 - 505+75, RT.
STA. 502+11 - 505+75, LT.
STA. 502+79 - 503+93, LT. (PARKING LOT)

DURABLE CROSSWALK MARKING
STA. 500+87 - 500+96 LT. - RT.

DURABLE 24" STOP BAR
STA. 500+79, RT.
STA. 501+48, LT.

REMOVING SIGNS
STA. 409+05, LT
STA. 409+40, RT (3)
STA. 409+50, LT
STA. 411+17, RT
STA. 411+70, RT
STA. 411+91, LT
STA. 501+35, RT

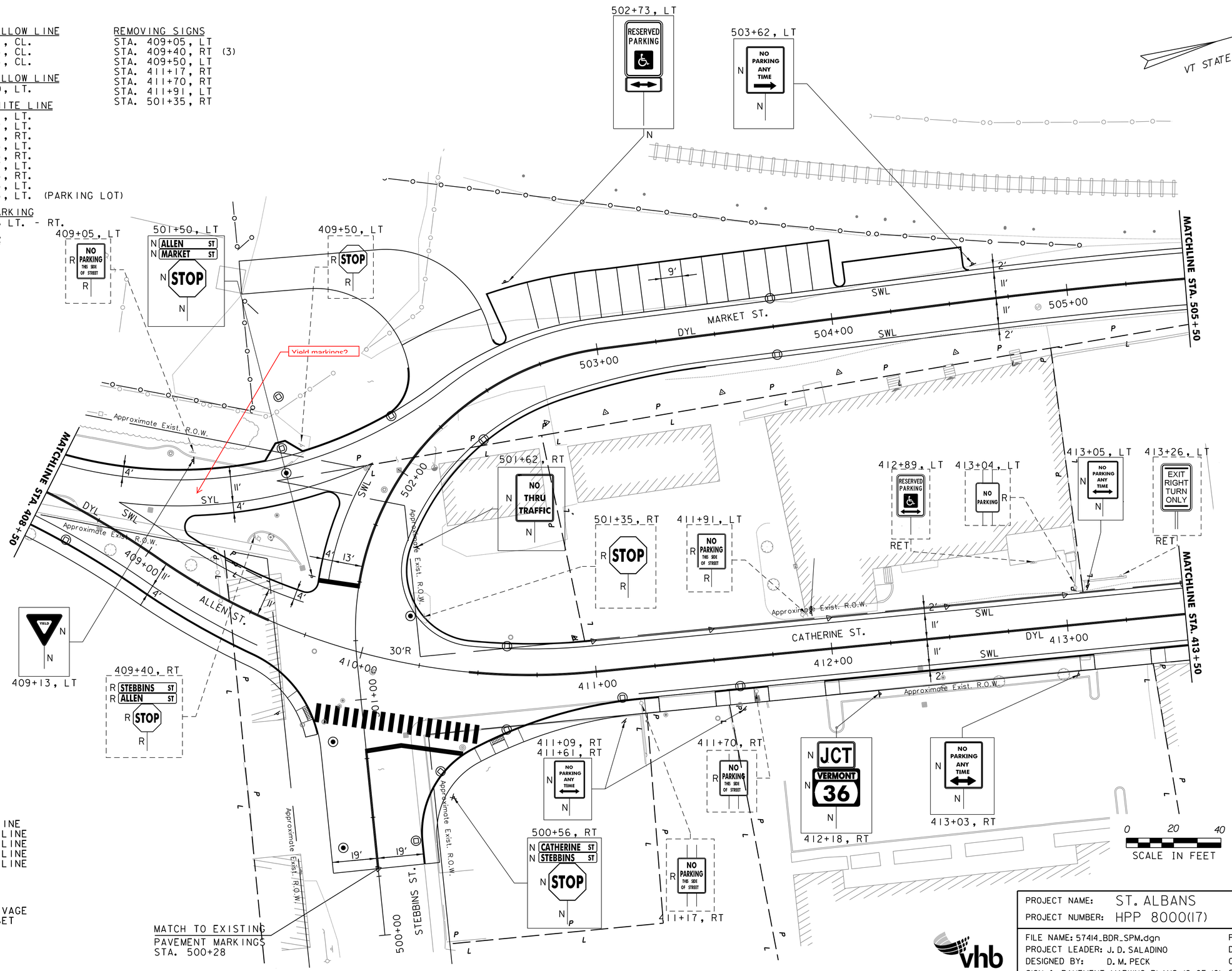

STRIPING LEGEND
SWL = SINGLE WHITE LINE
SYL = SINGLE YELLOW LINE
DYL = DOUBLE YELLOW LINE
SDL = SINGLE DASHED LINE
SBL = SINGLE BROKEN LINE

SIGNING LEGEND
N = NEW
R = REMOVE
R&S = REMOVE AND SALVAGE
R&R = REMOVE AND RESET
RET = RETAIN
S = SALVAGE
B-B = BACK TO BACK

PROJECT NAME: ST. ALBANS	
PROJECT NUMBER: HPP 8000(17)	
FILE NAME: 57414_BDR_SPM.dgn	PLOT DATE: 3/4/2016
PROJECT LEADER: J. D. SALADINO	DRAWN BY: G. GOMEZ
DESIGNED BY: D. M. PECK	CHECKED BY: M.J. SERVETAS
SIGN & PAVEMENT MARKING PLANS (8 OF 16)	SHEET 101 OF 230

CONSTRUCTION NOTES:

DURABLE 4" DOUBLE YELLOW LINE
STA. 38+25 - 39+49, CL. & LT.
STA. 412+25 - 413+57, CL.
STA. 505+75 - 506+98, CL.
STA. 600+46 - 603+25, CL.

DURABLE LETTER OR SYMBOL
STA. 38+29, RT. "LT. ARROW"
STA. 38+86, RT. "ONLY"
STA. 39+33, RT. "LT. ARROW"
STA. 600+57, LT. "RT. ARROW"
STA. 600+57, LT. 'THRU/LT. ARROW"
STA. 601+29, LT. "THRU/LT. ARROW"
STA. 601+29, LT. "ONLY'
STA. 602+13, LT. "THRU/LT. ARROW"
STA. 602+13, LT. "RT. ARROW"
STA. 602+95, LT. "THRU/LT. ARROW"
STA. 602+95, LT. "ONLY"

DURABLE CROSSWALK MARKING
STA. 39+48 - 39+68, RT. - LT.
STA. 413+61 - 413+67, RT. - LT.
STA. 507+01 - 507+13, LT. - RT.
STA. 600+24 - 600+51, LT. - RT.
STA. 602+03 - 602+25, LT.

DURABLE 4" SINGLE WHITE LINE
STA. 38+24 - 39+42, RT.
STA. 412+25 - 413+57, LT. & RT.
STA. 505+75 - 506+75, LT.
STA. 505+75 - 506+98, RT.
STA. 600+48 - 603+25, LT.
STA. 600+70 - 601+98, LT. (PARKING)
STA. 602+65 - 603+10, LT. (PARKING)
STA. 600+81 - 603+12, RT. (PARKING)

DURABLE 24" STOP BAR
STA. 39+43, RT.
STA. 413+56, RT.
STA. 506+99, RT.
STA. 600+47, LT.

REMOVING SIGNS
STA. 39+58, LT.
STA. 40+08, RT
STA. 40+70, LT
STA. 411+92, RT
STA. 413+55, RT (3)
STA. 600+40, LT
STA. 601+15, RT
STA. 601+93, RT
STA. 602+75, RT
STA. 603+15, LT

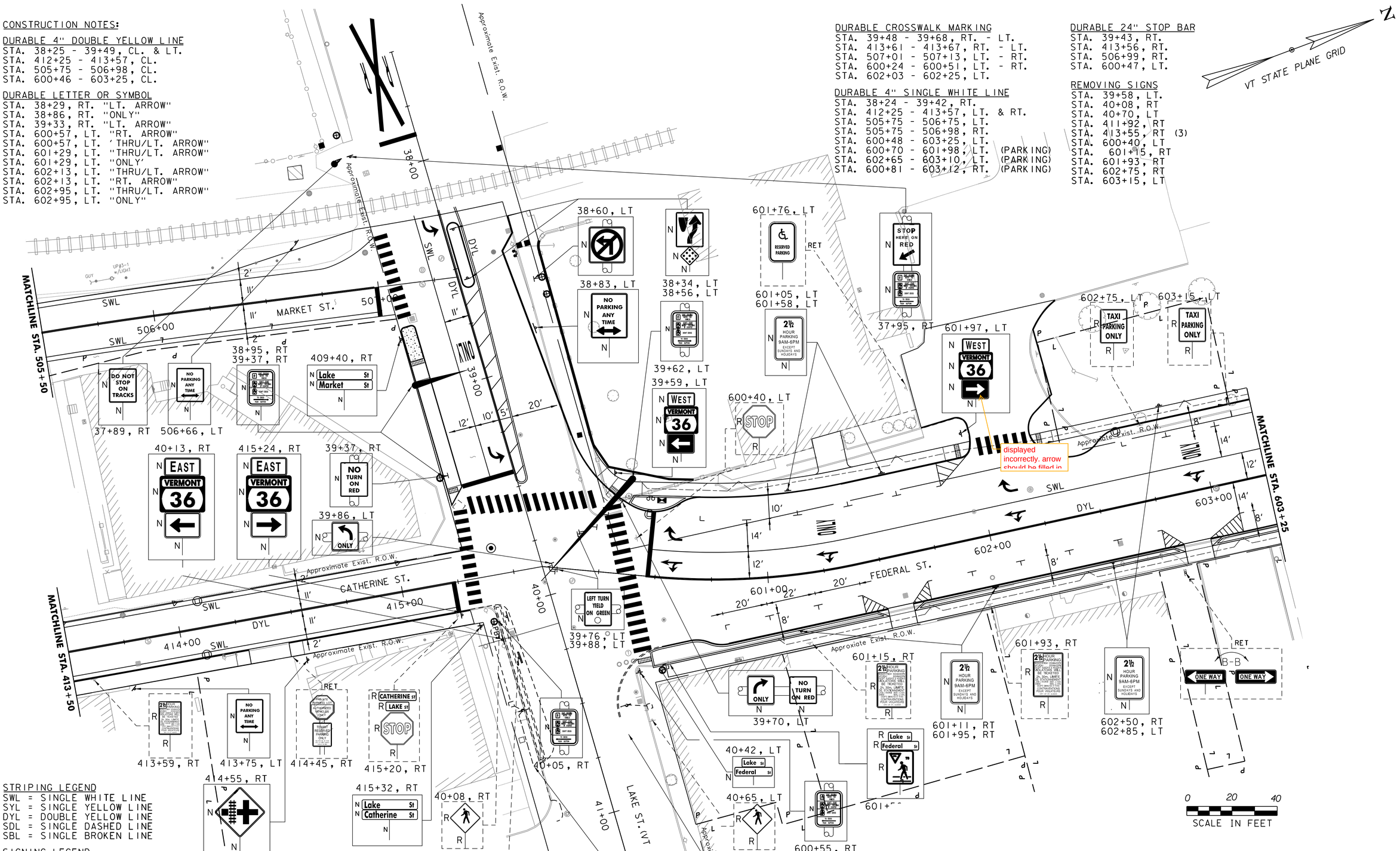

STRIPING LEGEND
SWL = SINGLE WHITE LINE
SYL = SINGLE YELLOW LINE
DYL = DOUBLE YELLOW LINE
SDL = SINGLE DASHED LINE
SBL = SINGLE BROKEN LINE

SIGNING LEGEND
N = NEW
R = REMOVE
R&S = REMOVE AND SALVAGE
R&R = REMOVE AND RESET
RET = RETAIN
S = SALVAGE
B-B = BACK TO BACK

PROJECT NAME: ST. ALBANS	
PROJECT NUMBER: HPP 8000(17)	
FILE NAME: 57414_BDR_SPM.dgn	PLOT DATE: 3/4/2016
PROJECT LEADER: J. D. SALADINO	DRAWN BY: G. GOMEZ
DESIGNED BY: D. M. PECK	CHECKED BY: M.J. SERVETAS
SIGN & PAVEMENT MARKING PLANS (9 OF 16)	SHEET 102 OF 230

CONSTRUCTION NOTES:

DURABLE 4" SINGLE WHITE LINE
STA. 603+28 - 603+50, LT. & RT. (PARKING)
STA. 604+52 - 604+92, RT. (PARKING)
STA. 606+14 - 606+64, RT. (PARKING)
STA. 607+46 - 609+25, RT.
STA. 603+25 - 603+50, LT. (PARKING)
STA. 604+33 - 605+66, LT. (PARKING)
STA. 606+76 - 608+04, LT. (PARKING)
STA. 608+04 - 609+25, LT.

DURABLE 4" DOUBLE YELLOW LINE
STA. 603+25 - 605+11, CL.
STA. 605+55 - 609+25, CL.
STA. 605+41, RT. (KINGMAN ST.)

DURABLE CROSSWALK MARKING
STA. 603+98 - 604+21, RT.
STA. 603+99 - 604+25, LT.
STA. 605+26 - 605+68, RT.
STA. 607+18 - 607+39, RT.

REMOVING SIGNS
STA. 603+62, RT (3)
STA. 604+29, RT
STA. 604+56, LT (2)
STA. 604+92, LT
STA. 605+02, RT (2)
STA. 605+13, RT
STA. 605+26, LT (2)
STA. 605+72, RT (4)
STA. 606+03, RT
STA. 606+96, LT
STA. 607+36, LT
STA. 607+44, RT (2)

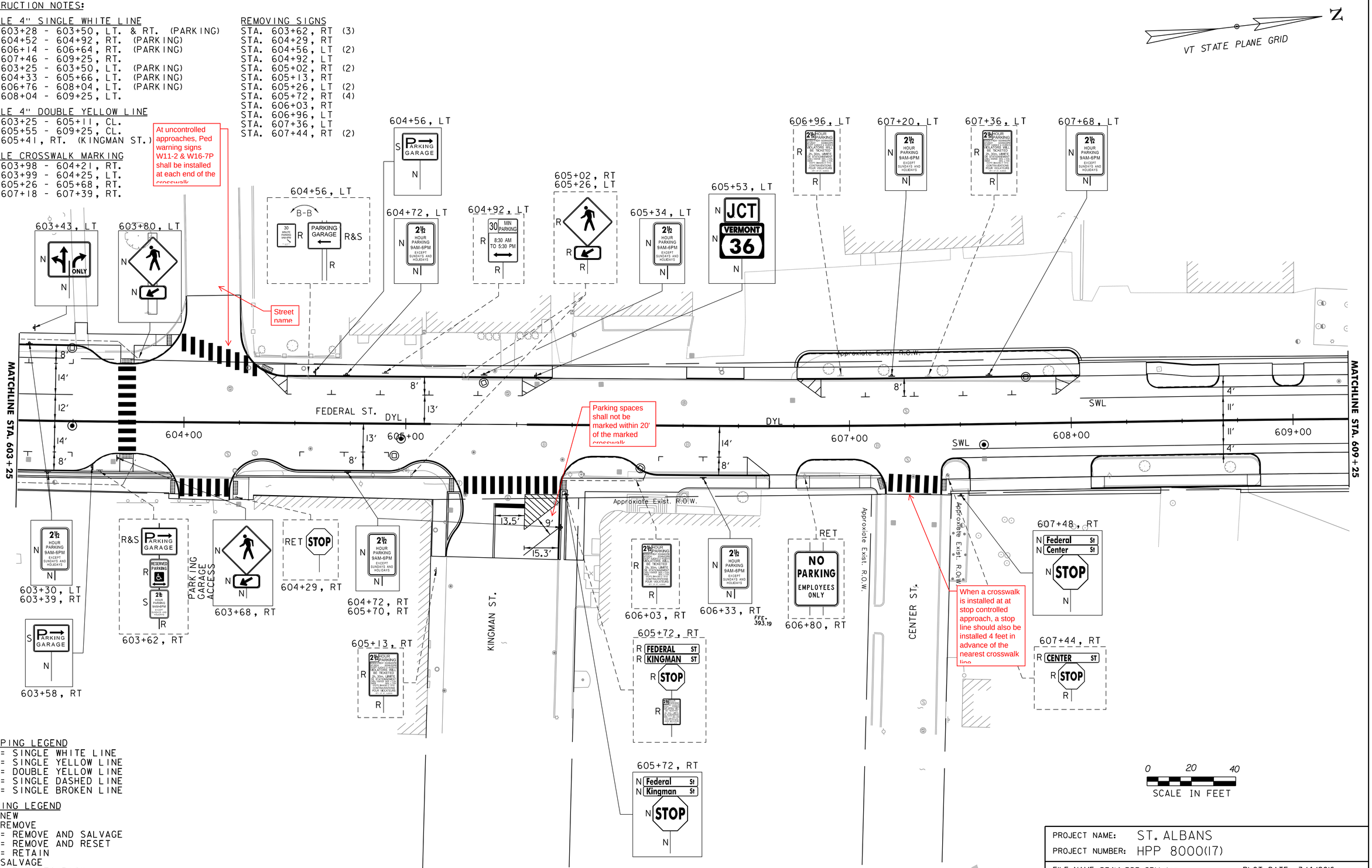

STRIPING LEGEND
SWL = SINGLE WHITE LINE
SYL = SINGLE YELLOW LINE
DYL = DOUBLE YELLOW LINE
SDL = SINGLE DASHED LINE
SBL = SINGLE BROKEN LINE

SIGNING LEGEND
N = NEW
R = REMOVE
R&S = REMOVE AND SALVAGE
R&R = REMOVE AND RESET
RET = RETAIN
S = SALVAGE
B-B = BACK TO BACK

PROJECT NAME: ST. ALBANS	
PROJECT NUMBER: HPP 8000(17)	
FILE NAME: 57414_BDR_SPM.dgn	PLOT DATE: 3/4/2016
PROJECT LEADER: J. D. SALADINO	DRAWN BY: G. GOMEZ
DESIGNED BY: D. M. PECK	CHECKED BY: M.J. SERVETAS
SIGN & PAVEMENT MARKING PLANS (10 OF 16)	SHEET 103 OF 230

VHB 57414.00

CONSTRUCTION NOTES:

DURABLE 4" SINGLE WHITE LINE
STA. 609+25 - 614+50, LT.
STA. 609+25 - 610+44, RT.
STA. 610+87 - 612+89, RT.
STA. 613+43 - 614+50, RT.

DURABLE 4" DOUBLE YELLOW LINE
STA. 609+25 - 610+44, CL.
STA. 610+87 - 612+89, CL.
STA. 613+43 - 614+50, CL.

DURABLE CROSSWALK MARKING
STA. 610+53 - 610+76, RT.
STA. 613+05 - 613+27, RT.
STA. 613+08 - 613+26, LT.

REMOVING SIGNS
STA. 610+80, RT (3)
STA. 612+76, LT
STA. 612+96, RT (2)
STA. 613+41, LT (3)

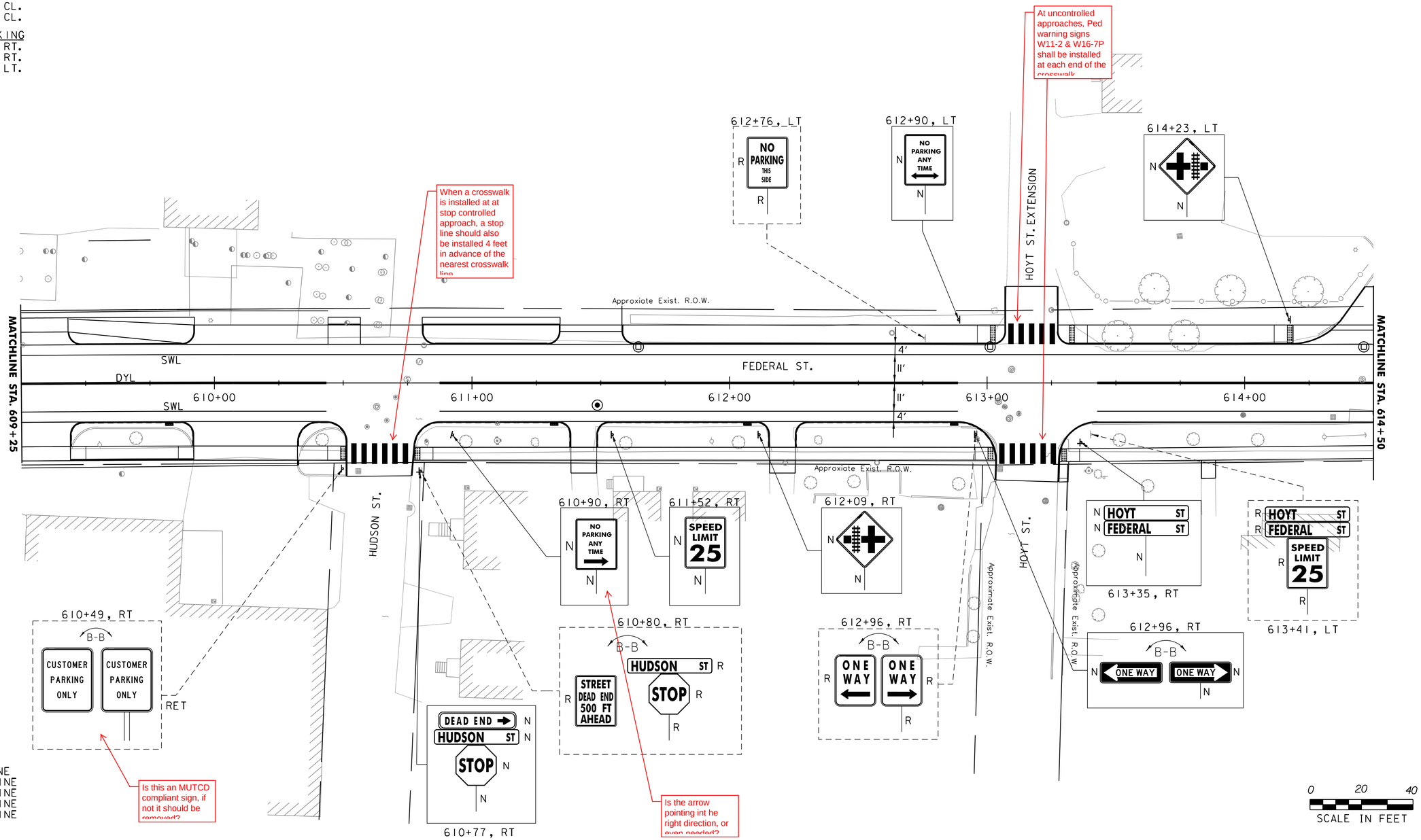

STRIPING LEGEND
SWL = SINGLE WHITE LINE
SYL = SINGLE YELLOW LINE
DYL = DOUBLE YELLOW LINE
SDL = SINGLE DASHED LINE
SBL = SINGLE BROKEN LINE

SIGNING LEGEND
N = NEW
R = REMOVE
R&S = REMOVE AND SALVAGE
R&R = REMOVE AND RESET
RET = RETAIN
S = SALVAGE
B-B = BACK TO BACK

PROJECT NAME: ST. ALBANS	
PROJECT NUMBER: HPP 8000(17)	
FILE NAME: 57414_BDR_SPM.dgn	PLOT DATE: 3/4/2016
PROJECT LEADER: J. D. SALADINO	DRAWN BY: G. GOMEZ
DESIGNED BY: D. M. PECK	CHECKED BY: M.J. SERVETAS
SIGN & PAVEMENT MARKING PLANS (11 OF 16)	SHEET 104 OF 230

VHB 57414.00

CONSTRUCTION NOTES:

DURABLE 4" DOUBLE YELLOW LINE
STA. 614+50 - 616+61, CL.
STA. 617+55 - 620+15, CL.

DURABLE 4" SINGLE WHITE LINE
STA. 614+50 - 616+61, LT.
STA. 617+55 - 620+15, LT.
STA. 614+50 - 620+15, RT.

DURABLE CROSSWALK MARKING
STA. 616+80 - 617+34, LT.

REMOVING SIGNS
619+79, RT

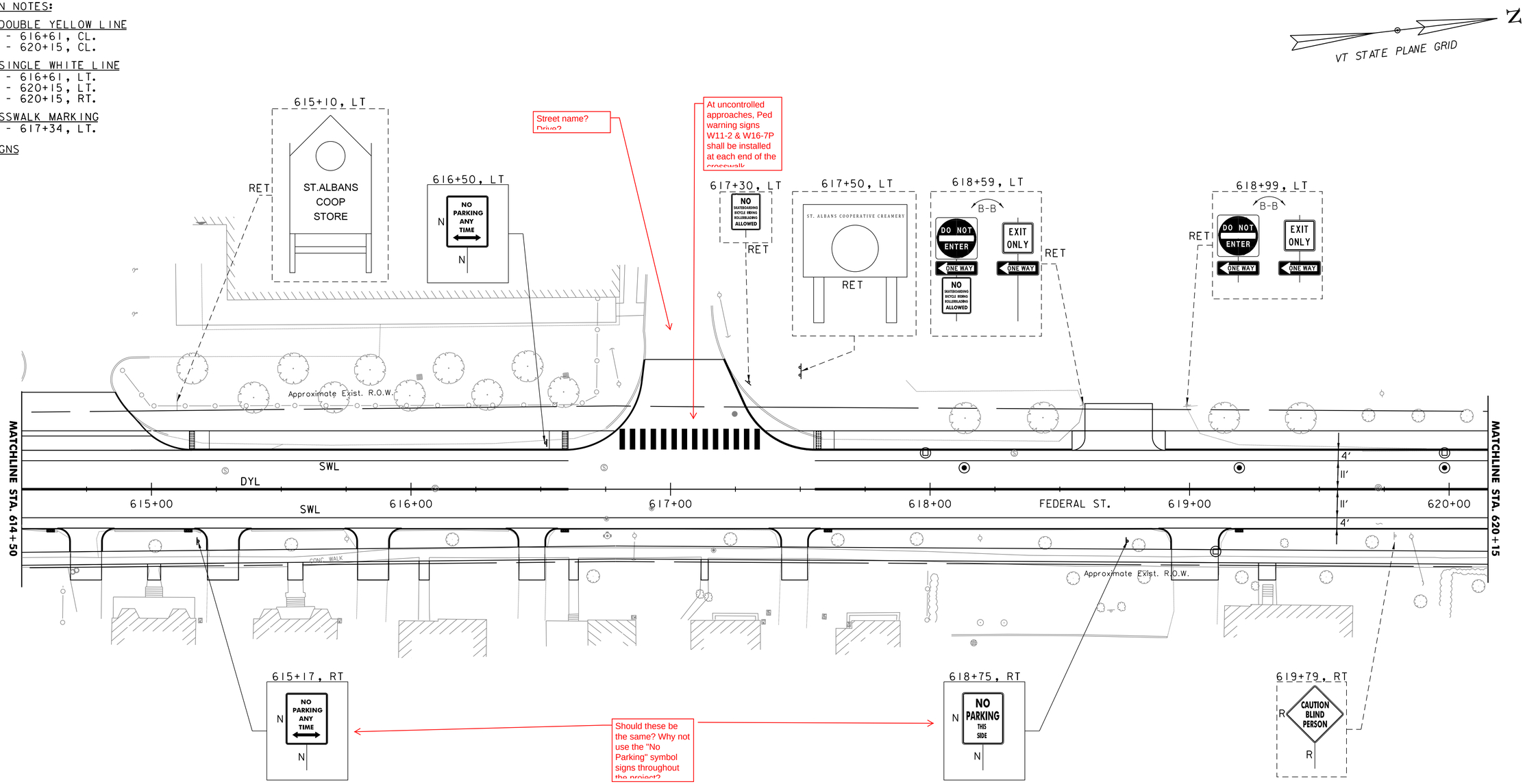

STRIPING LEGEND
SWL = SINGLE WHITE LINE
SYL = SINGLE YELLOW LINE
DYL = DOUBLE YELLOW LINE
SDL = SINGLE DASHED LINE
SBL = SINGLE BROKEN LINE

SIGNING LEGEND
N = NEW
R = REMOVE
R&S = REMOVE AND SALVAGE
R&R = REMOVE AND RESET
RET = RETAIN
S = SALVAGE
B-B = BACK TO BACK

0 20 40
SCALE IN FEET

PROJECT NAME: ST. ALBANS	
PROJECT NUMBER: HPP 8000(17)	
FILE NAME: 57414_BDR_SPM.dgn	PLOT DATE: 3/4/2016
PROJECT LEADER: J. D. SALADINO	DRAWN BY: G. GOMEZ
DESIGNED BY: D. M. PECK	CHECKED BY: M.J. SERVETAS
SIGN & PAVEMENT MARKING PLANS (12 OF 16)	SHEET 105 OF 230

CONSTRUCTION NOTES:

DURABLE 4" DOUBLE YELLOW LINE
STA. 620+15 - 621+33, CL.
STA. 622+15 - 625+50, CL.

DURABLE 4" SINGLE WHITE LINE
STA. 620+15 - 621+22, LT.
STA. 622+15 - 625+50, LT.
STA. 620+15 - 625+50, RT.

DURABLE CROSSWALK MARKING
STA. 621+40 - 621+86, LT.
STA. 622+09 - 622+17, LT. - RT.

REMOVING SIGNS
STA. 621+42, LT (2)
STA. 622+60, LT

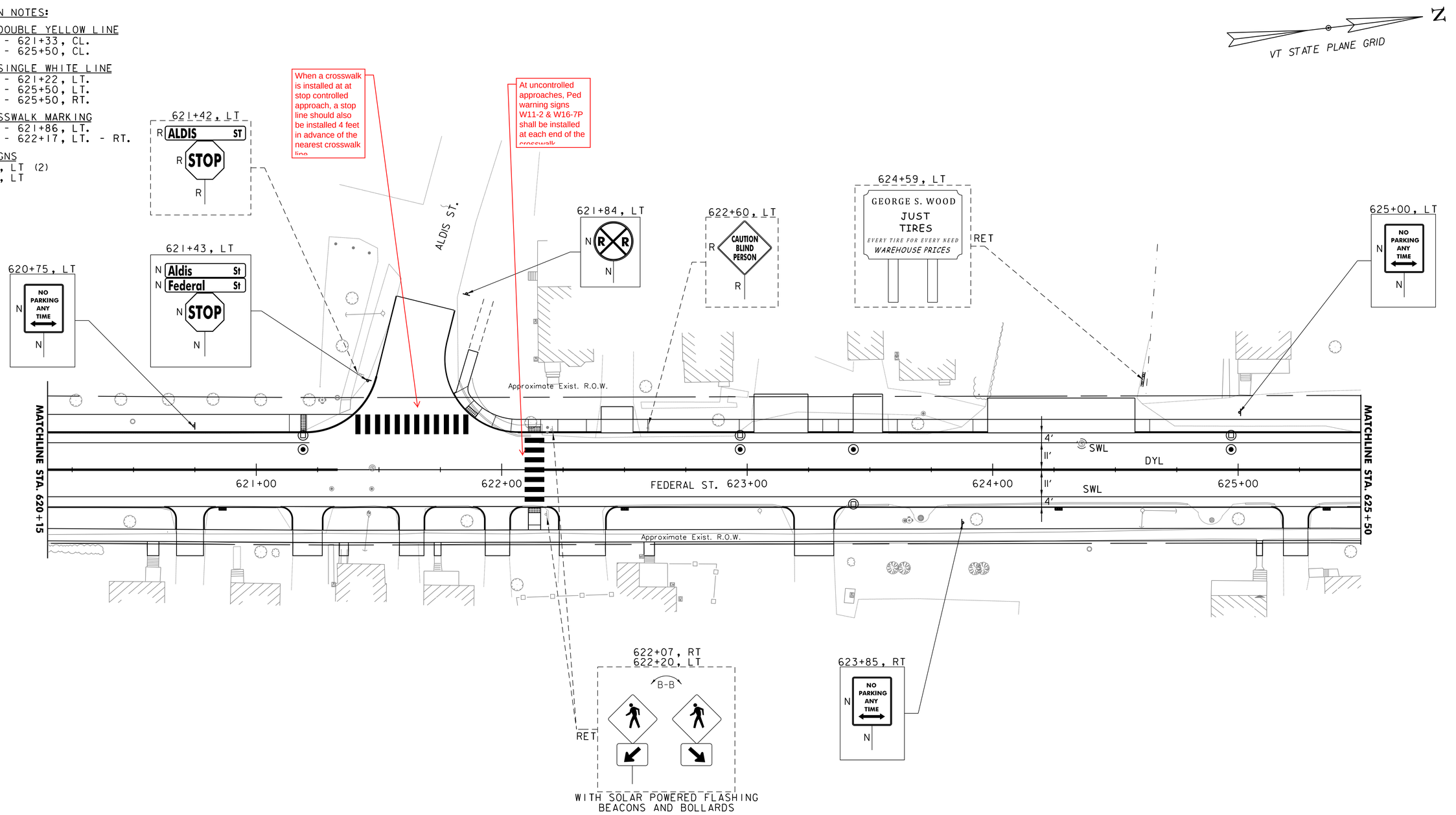

STRIPING LEGEND
SWL = SINGLE WHITE LINE
SYL = SINGLE YELLOW LINE
DYL = DOUBLE YELLOW LINE
SDL = SINGLE DASHED LINE
SBL = SINGLE BROKEN LINE

SIGNING LEGEND
N = NEW
R = REMOVE
R&S = REMOVE AND SALVAGE
R&R = REMOVE AND RESET
RET = RETAIN
S = SALVAGE
B-B = BACK TO BACK

0 20 40
SCALE IN FEET

PROJECT NAME: ST. ALBANS	
PROJECT NUMBER: HPP 8000(17)	
FILE NAME: 57414_BDR_SPM.dgn	PLOT DATE: 3/4/2016
PROJECT LEADER: J. D. SALADINO	DRAWN BY: G. GOMEZ
DESIGNED BY: D. M. PECK	CHECKED BY: M.J. SERVETAS
SIGN & PAVEMENT MARKING PLANS (13 OF 16)	SHEET 106 OF 230

CONSTRUCTION NOTES:

DURABLE 4" SINGLE WHITE LINE
STA. 625+50 - 630+25, LT.
STA. 625+50 - 630+25, RT.
STA. 629+63 - 630+25, RT.

DURABLE 4' DOUBLE YELLOW LINE
STA. 625+50 - 626+50, CL.
STA. 626+50 - 629+50, LT. & RT.
STA. 629+50 - 630+25, CL.

DURABLE LETTER OR SYMBOL
STA. 629+68, RT. "LT. ARROW"
STA. 629+68, RT. "RT. ARROW"

REMOVING SIGNS
STA. 629+14, LT

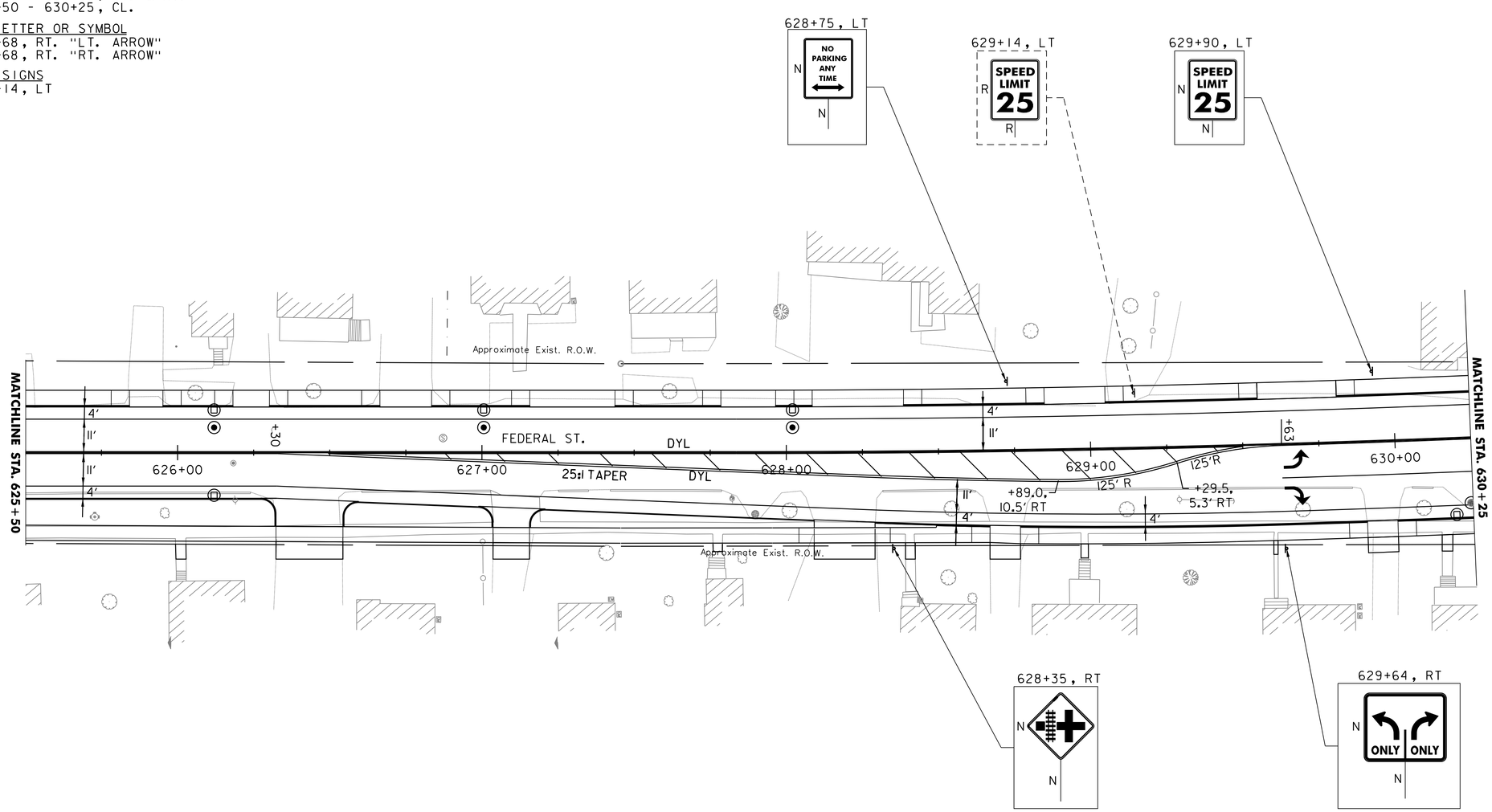

STRIPING LEGEND
SWL = SINGLE WHITE LINE
SYL = SINGLE YELLOW LINE
DYL = DOUBLE YELLOW LINE
SDL = SINGLE DASHED LINE
SBL = SINGLE BROKEN LINE

SIGNING LEGEND
N = NEW
R = REMOVE
R&S = REMOVE AND SALVAGE
R&R = REMOVE AND RESET
RET = RETAIN
S = SALVAGE
B-B = BACK TO BACK

0 20 40
SCALE IN FEET

PROJECT NAME: ST. ALBANS	
PROJECT NUMBER: HPP 8000(17)	
FILE NAME: 57414_BDR_SPM.dgn	PLOT DATE: 3/4/2016
PROJECT LEADER: J. D. SALADINO	DRAWN BY: G. GOMEZ
DESIGNED BY: D. M. PECK	CHECKED BY: M.J. SERVETAS
SIGN & PAVEMENT MARKING PLANS (14 OF 16)	SHEET 107 OF 230

CONSTRUCTION NOTES:

DURABLE 4" DOUBLE YELLOW LINE
STA. 630+25 - 631+13, CL.
STA. 800+40 - 802+25, CL.
STA. 801+31 - 802+25, RT.
STA. 803+40 - 805+25, CL.

DURABLE 4" SINGLE WHITE LINE
STA. 630+25 - 631+13, RT.
STA. 630+25 - 631+13, RT.
STA. 630+25 - 631+16, LT.
STA. 801+46 - 802+18, RT.
STA. 803+41 - 805+15, LT.

24" STOP BAR
STA. 631+13, RT
STA. 802+19, RT.
STA. 803+40, LT.

LETTER OR SYMBOL
STA. 801+51, RT. (RT. ARROW)
STA. 802+10, RT. (RT. ARROW)
STA. 803+50, LT. (LT. ARROW)
STA. 803+62, LT. (ONLY)
STA. 804+98, LT. (LT. ARROW)
STA. 805+11, LT. (ONLY)
STA. 631+04, RT. (LT. ARROW)
STA. 631+04, RT. (RT. ARROW)

DURABLE CROSSWALK MARKING
STA. 631+17 - 631+25, LT. - RT.
STA. 802+27 - 802+33, RT. - LT.

PEDESTRIAN LIGHT POLE BASE
STA. 631+17.91, LT.
STA. 631+18.63, RT.
STA. 802+26.48, LT.
STA. 802+27.27, RT.

TRAFFIC SIGNAL HEAD POLE BASE
STA. 631+19.74, LT.
STA. 631+20.43, RT.
STA. 802+24.14, LT.
STA. 802+25.98, RT.

REMOVING SIGNS
STA. 631+59, RT
STA. 801+10, LT

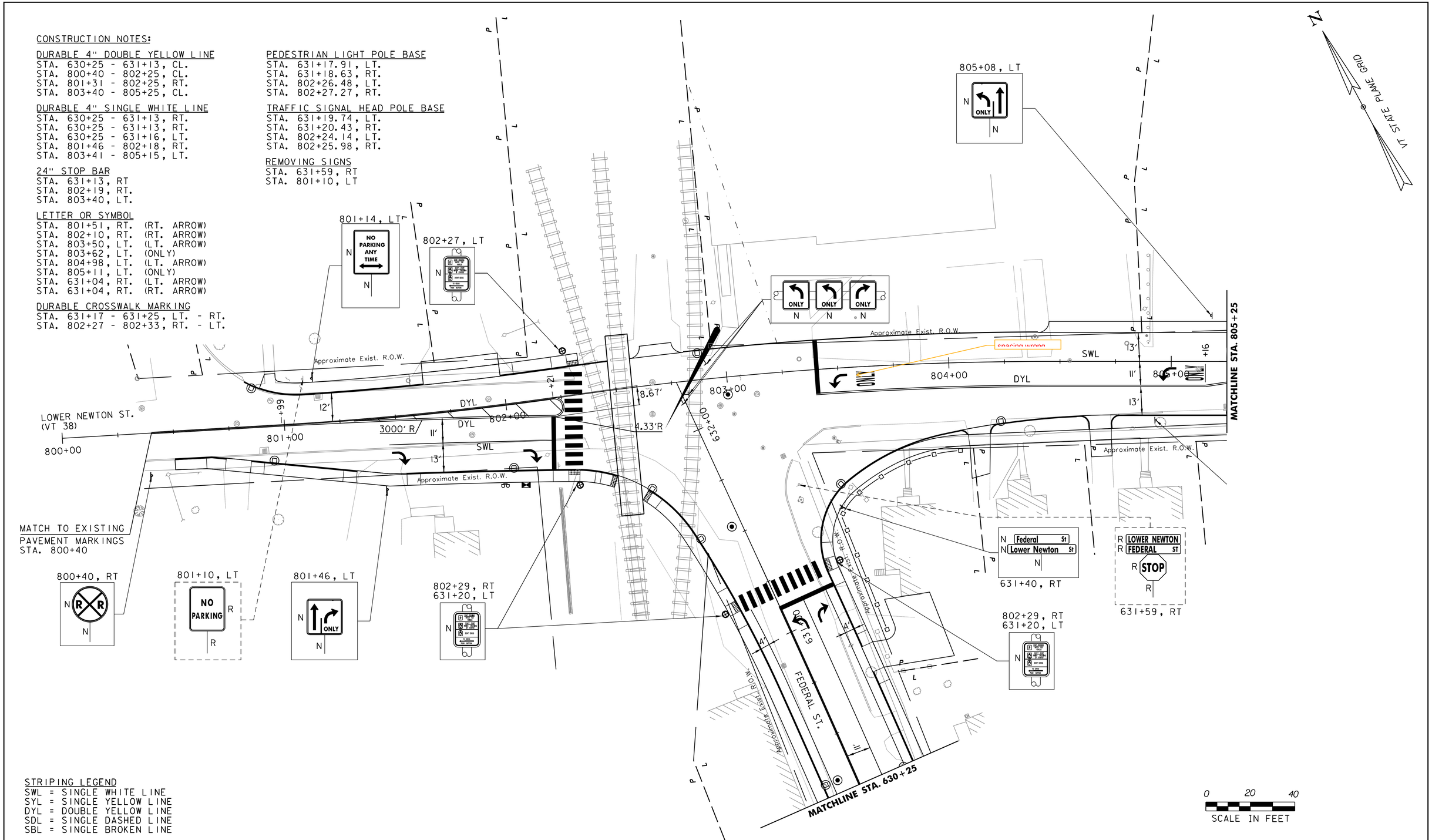

STRIPING LEGEND
SWL = SINGLE WHITE LINE
SYL = SINGLE YELLOW LINE
DYL = DOUBLE YELLOW LINE
SDL = SINGLE DASHED LINE
SBL = SINGLE BROKEN LINE

SIGNING LEGEND
N = NEW
R = REMOVE
R&S = REMOVE AND SALVAGE
R&R = REMOVE AND RESET
RET = RETAIN
S = SALVAGE
B-B = BACK TO BACK

PROJECT NAME: ST. ALBANS	
PROJECT NUMBER: HPP 8000(17)	
FILE NAME: 57414_BDR_SPM.dgn	PLOT DATE: 3/4/2016
PROJECT LEADER: J. D. SALADINO	DRAWN BY: G. GOMEZ
DESIGNED BY: D. M. PECK	CHECKED BY: M.J. SERVETAS
SIGN & PAVEMENT MARKING PLANS (15 OF 16)	SHEET 108 OF 230

CONSTRUCTION NOTES:

DURABLE 4" SINGLE WHITE LINE
STA. 805+90 - 809+02, RT.
STA. 1001+80 - 1002+27, RT.
STA. 1003+77 - 1004+65, LT.

DURABLE 4" DOUBLE YELLOW LINE
STA. 805+25 - 809+04, CL.
STA. 1001+80 - 1002+27, CL.
STA. 1003+81 - 1004+65, CL.

DURABLE CROSSWALK MARKING
STA. 808+98 - 809+23, LT. - RT.
STA. 1002+33 - 1002+41, LT. - RT.
STA. 1002+51 - 1002+69, RT.

24" STOP BAR
STA. 809+01.69, RT.
STA. 1002+27.56, RT.
STA. 1003+77.10, LT.
STA. 1003+83.10, LT.

LETTER OR SYMBOL
STA. 806+02, RT. (ONLY)
STA. 806+15, RT. (LT. ARROW)
STA. 807+49, RT. (ONLY)
STA. 807+61, RT. (LT. ARROW)
STA. 808+82, RT. (ONLY)
STA. 808+93, RT. (LT. ARROW)
STA. 1002+06, RT. (ONLY)
STA. 1002+18, RT. (LT. ARROW)
STA. 1003+84, LT. (RT. ARROW)
STA. 1003+96, LT. (THRU/LT. ARROW)
STA. 1003+98, LT. (ONLY)

REMOVING SIGNS
STA. 806+82, LT (2)
STA. 807+56, RT
STA. 1002+03, LT
STA. 1002+74, RT
STA. 1002+80, LT
STA. 1002+90, RT (2)
STA. 1002+91, LT
STA. 1002+96, LT
STA. 1003+03, RT
STA. 1003+09, RT
STA. 1003+22, RT
STA. 1003+66, LT
STA. 1003+70, LT (2)
STA. 1004+71, LT

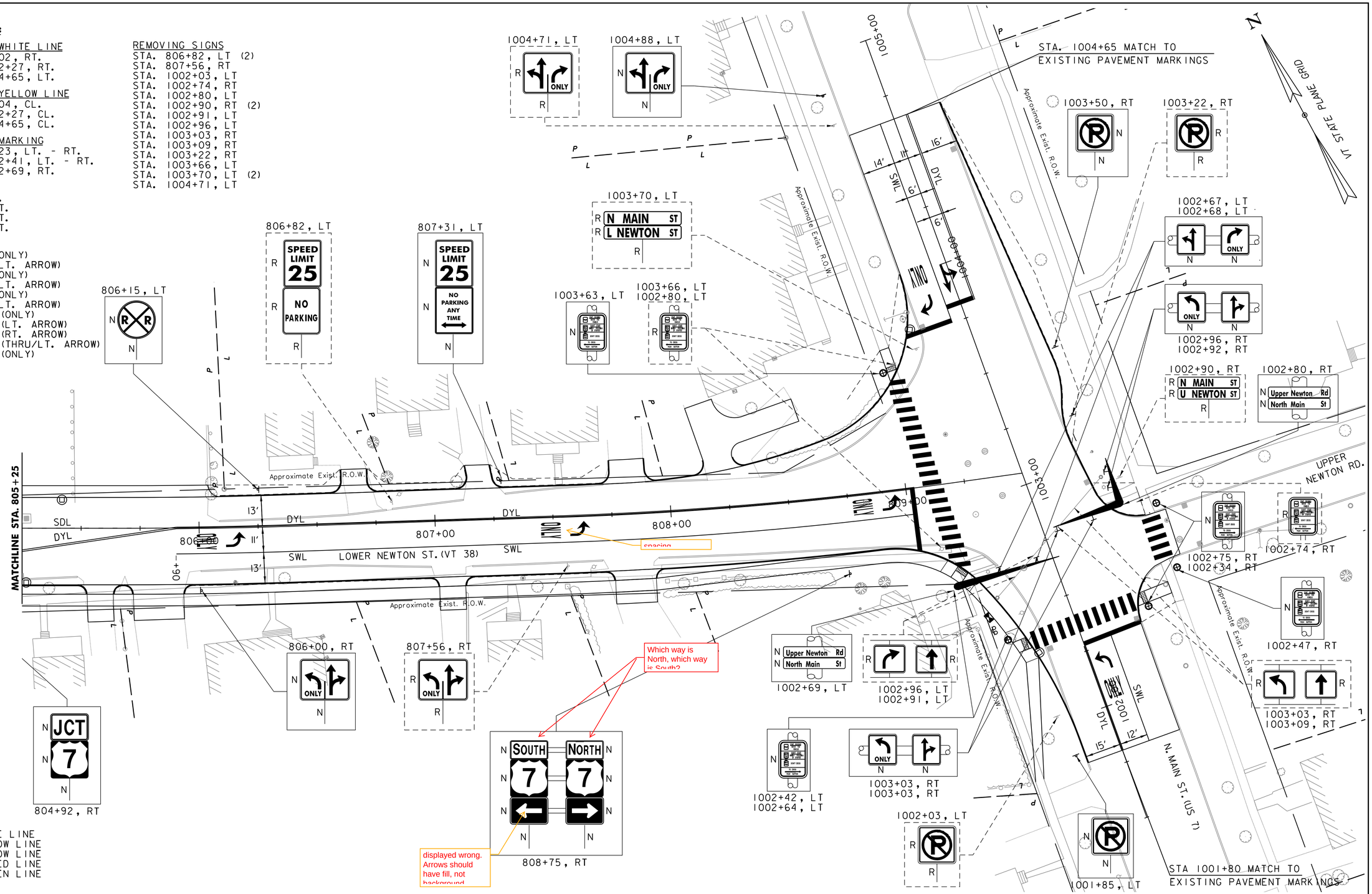

STRIPING LEGEND
SWL = SINGLE WHITE LINE
SYL = SINGLE YELLOW LINE
DYL = DOUBLE YELLOW LINE
SDL = SINGLE DASHED LINE
SBL = SINGLE BROKEN LINE

SIGNING LEGEND
N = NEW
R = REMOVE
R&S = REMOVE AND SALVAGE
R&R = REMOVE AND RESET
RET = RETAIN
S = SALVAGE
B-B = BACK TO BACK

0 20 40
SCALE IN FEET

vhb

PROJECT NAME: ST. ALBANS	
PROJECT NUMBER: HPP 8000(17)	
FILE NAME: 57414_BDR_SPM.dgn	PLOT DATE: 3/4/2016
PROJECT LEADER: J. D. SALADINO	DRAWN BY: G. GOMEZ
DESIGNED BY: D. M. PECK	CHECKED BY: M.J. SERVETAS
SIGN & PAVEMENT MARKING PLANS (16 OF 16)	SHEET 109 OF 230

TRAFFIC SIGNAL PLAN NOTES

1. ALL MATERIALS AND CONSTRUCTION SHALL CONFORM TO THE STATE OF VERMONT AGENCY OF TRANSPORTATION'S "STANDARD SPECIFICATIONS FOR CONSTRUCTION", DATED 2011, WITH CURRENT MODIFICATIONS. ALL TRAFFIC SIGNAL CONTROLLERS SHALL BE NEMA TS2, TYPE 2.

Does St. Albans want a specific brand of equipment for synchronization with other equip? Consider listing here. Will require a Public Interest Finding document if they do.

2. OVERHEAD SIGN/SIGNAL SUPPORTS SHALL CONFORM TO AASHTO'S PUBLICATION ENTITLED "STANDARD SPECIFICATIONS FOR STRUCTURAL SUPPORTS FOR HIGHWAY SIGNS, LUMINAIRES, AND TRAFFIC SIGNALS", DATED 2009 OR ITS LATEST INTERIMS.

3. THE DESIGN CALCULATIONS SHALL TAKE INTO ACCOUNT THE FOLLOWING CRITERIA:

STRUCTURE CRITERIA

DESIGN LIFE: 50 YEARS
WIND LOAD: 90 MPH, UNLESS SPECIAL SITE CONDITIONS DICTATE
ICE LOAD PER AASHTO'S PUBLICATION ENTITLED 'STANDARD SPECIFICATIONS FOR STRUCTURAL SUPPORTS FOR HIGHWAY SIGNS, LUMINAIRES, AND TRAFFIC SIGNALS', DATED 2009 WITH ITS LATEST INTERIMS.

FATIGUE CRITERIA

FATIGUE CATEGORY: I FOR MAST ARM SIGN STRUCTURES, 2 FOR SIGNAL MAST ARMS
VORTEX SHEDDING: INCLUDE NATURAL WIND GUST: INCLUDE TRUCK INDUCED WIND GUSTS: INCLUDE FOR ROADWAYS WHERE SPEED LIMIT IS 40 MPH OR GREATER
GALLOPING: DO NOT INCLUDE IN DESIGN CALCULATIONS

FOUNDATION CRITERIA

CONCRETE: CONCRETE, HIGH PERFORMANCE CLASS B, STATE OF VERMONT, AGENCY OF TRANSPORTATION'S 'STANDARD SPECIFICATIONS FOR CONSTRUCTION', DATED 2011, SECTION 501 REINFORCING STEEL: STATE OF VERMONT, AGENCY OF TRANSPORTATION'S 'STANDARD SPECIFICATIONS FOR CONSTRUCTION', DATED 2011, SUB-SECTION 713.01

ALLOWABLE BEARING CAPACITY: IN ACCORDANCE WITH GEOTECHNICAL REPORT
INTERNAL SOIL FRICTION ANGLE, : IN ACCORDANCE WITH GEOTECHNICAL REPORT

4. ANCHOR BOLTS
A MINIMUM OF FOUR STAINLESS STEEL ANCHOR BOLTS WITH TWO HEXAGON NUTS, ONE WASHER AND ONE LOCK WASHER PER BOLT SHALL BE FURNISHED WITH EACH POLE. ANCHOR BOLT PLATES, WHEN USED, SHALL ALSO BE STAINLESS STEEL. STATE OF VERMONT, AGENCY OF TRANSPORTATION'S 'STANDARD SPECIFICATIONS FOR CONSTRUCTION', DATED 2011, SUB-SECTION 714.09.

Revised VTrans General Specials 714.09 call for galvanized anchor bolts. Recommend against requiring stainless.

5. FLANGE BOLTS

ALL FLANGE BOLTS AND HEX NUTS SHALL BE HIGH STRENGTH STEEL AND SHALL CONFORM TO STATE OF VERMONT, AGENCY OF TRANSPORTATION'S 'STANDARD SPECIFICATIONS FOR CONSTRUCTION', DATED 2011, SUB-SECTION 714.05.

6. HORIZONTAL AND VERTICAL MEMBERS
STEEL TUBES SHALL BE FORMED AND WELDED WITH ONE CONTINUOUS LONGITUDINAL WELD ONLY. AFTER FORMING AND WELDING THEY SHALL BE COLD ROLLED TO ENSURE UNIFORMITY OF SIZE AND SMOOTHNESS OF WELD. THERE SHALL BE NO TRANSVERSE WELDING EXCEPT AT THE FLANGE CONNECTIONS AND POLE BASE PLATES, WHERE THE TUBES SHALL TELESCOPE THE FLANGES AND PLATES AND BE CONTINUOUSLY WELDED BOTH SIDES INSIDE AND OUT TO WITHSTAND THE FULL TRANSFER OF THE BENDING STRENGTH TO THE BOLTS. OPTIONALLY, THE MEMBERS MAY BE A SERIES OF TWO OR THREE DIFFERENT DIAMETER PIPES WELDED TOGETHER. STEEL TUBES SHALL BE CONSTRUCTED FROM MATERIALS CONFORMING TO STATE OF VERMONT, AGENCY OF TRANSPORTATION'S 'STANDARD SPECIFICATIONS FOR CONSTRUCTION', DATED 2011, SUB-SECTION 752.03.

7. GALVANIZING

ANY STEEL COMPONENTS, EXCEPT CONCRETE REINFORCING AND STAINLESS STEEL HARDWARE THAT ARE NOT CALLED OUT TO BE PAINTED BLACK, ARE TO BE HOT DIPPED GALVANIZED AFTER FABRICATION. THE ASSEMBLIES SHALL BE DESIGNED AND FABRICATED TO PERMIT GALVANIZING ON ALL INTERIOR AND EXTERIOR SURFACES AND SHALL BE FREE OF POCKETS AND OTHER STRUCTURAL OBSTRUCTIONS THAT WILL NOT PERMIT PROPER DEPOSITION OF ZINC COATING. GALVANIZING SHALL BE IN ACCORDANCE WITH STATE OF VERMONT, AGENCY OF TRANSPORTATION'S 'STANDARD SPECIFICATIONS FOR CONSTRUCTION', DATED 2011, SUB-SECTION 752.02b.

8. WELDING

ALL DESIGN DETAILS, WORKMANSHIP, PROCEDURES AND INSPECTION SHALL CONFORM TO VTRANS SPECIFICATIONS SUB-SECTION 506.10.

9. FOUNDATIONS

A. FOUNDATIONS SHALL BE DESIGNED IN ACCORDANCE WITH THE MREI 10-01 GUIDELINES ISSUED BY THE AGENCY.

B. FOUNDATIONS SHALL BE CONSTRUCTED IN ACCORDANCE WITH THE FOLLOWING NOTES:

1. A MINIMUM EMBEDMENT DEPTH OF 5 FEET SHALL BE USED FOR ALL SPREAD FOOTING FOUNDATIONS; MEASURED FROM THE FINISHED GROUND SURFACE ELEVATION TO THE BOTTOM OF THE FOOTING ELEVATION.

2. EXCEPT FOR THE UPPERMOST 2 FEET OF SOIL, DRILLED SHAFT FOUNDATIONS SHALL BE POURED AGAINST UNDISTURBED MATERIAL; THE TOP 2 FEET OF SOIL SHALL BE NEGLECTED FOR DESIGN PURPOSES. A DISPOSABLE CIRCULAR CONCRETE FORM, IF USED, SHALL NOT BE PLACED DEEPER THAN 2 FEET, IN ORDER NOT TO REDUCE THE FRICTION BETWEEN THE SOIL AND THE CONCRETE.

3. AS AN ALTERNATIVE TO THE DRILLED HOLES, FOUNDATIONS MAY BE POURED IN EXCAVATED HOLES USING THE PROPER FORMS, WHICH SHALL BE REMOVED. THE EXCAVATED HOLES SHALL BE AT LEAST 2 FEET CLEAR OF THE FOUNDATION SIDES AND 1 FOOT DEEPER THAN THE FOUNDATION. CARE SHALL BE TAKEN TO AVOID EXCAVATING AROUND THE TOP OF THE FOUNDATION. DESIGN LIMITS AS FOR AN AUGURED FOUNDATION APPLY.

4. BACKFILL MATERIAL PLACED ADJACENT TO THE FOUNDATION SHALL MEET THE REQUIREMENTS FOR GRANULAR BACKFILL FOR STRUCTURES, VTRANS SPECIFICATION SUB-SECTION 704.08. BACKFILL MATERIAL SHALL BE COMPACTED AS DESCRIBED IN VTRANS CONSTRUCTION SPECIFICATIONS SUB-SECTION 204.08.

5. CONCRETE FOR FOUNDATION SHALL CONFORM TO THE REQUIREMENTS OF 501.34 CONCRETE, HIGH PERFORMANCE CLASS B. IF DRILLED SHAFT FOUNDATIONS ARE REQUIRED, THE CONCRETE SPECIFICATIONS MAY NEED TO BE ADJUSTED FOR CONSTRUCTIBILITY ISSUES. HOWEVER, IF REQUIRED, THE CONTRACTOR SHALL SUBMIT ANY CHANGES TO THE CONCRETE SPECIFICATION FOR REVIEW BY THE VTRANS PROJECT MANAGER.

6. STEEL PILES SHALL MEET THE REQUIREMENTS OF SECTION 505.

7. WHEN THE DESIGN DEPTH OF A FOUNDATION CANNOT BE OBTAINED DUE TO UNFORESEEN FIELD CONDITIONS, THE CONTRACTOR SHALL NOTIFY THE ENGINEER FOR THE MANUFACTURER TO OBTAIN A REVISED FOUNDATION DESIGN. SUCH A REVISION SHALL BE SUBMITTED TO THE VERMONT, AGENCY OF TRANSPORTATION, PROJECT MANAGER AND MAY REQUIRE UP TO A 4 WEEK REVIEW PERIOD BY VTRANS.

C. SIGNALS/SIGNS SHALL BE INSTALLED AND LEVELED AND POLES SHALL BE PLUMB PRIOR TO PLACING GROUT UNDER POLE BASE. GROUT MATERIAL SHALL BE NON-SHRINKING MORTAR CONFORMING TO SUB-SECTION 707.03 (MORTAR TYPE IV).

10. EACH OVERHEAD TRAFFIC SIGNAL/SIGN SUPPORT SHALL BE GROUNDED. THE GROUND SHALL CONSIST OF:

A) AN INTERNAL GROUND LUG OPPOSITE THE HAND HOLE.

B) A #6 AWG. (MIN.) SOFT DRAWN COPPER GROUNDING ELECTRODE CONDUCTOR.

C) A ⅝" X 8' (MIN.) COPPER CLAD GROUNDING ELECTRODE. THE RESISTANCE TO GROUND SHALL BE 25 OHMS OR LESS. ADDITIONAL GROUNDING ELECTRODES MAY BE REQUIRED (MINIMUM SPACING SHALL BE 6 FEET).

WHEN A POWER SERVICE, METER AND DISCONNECT ARE ATTACHED TO A POLE, THERE SHALL BE A CONTINUOUS GROUNDING ELECTRODE CONDUCTOR FROM THE METER AND DISCONNECT WHICH MAY RUN INTERNAL TO THE UPRIGHT, THROUGH THE ½ INCH FLEXIBLE TUBING IN THE CONCRETE BASE TO THE REQUIRED GROUNDING ELECTRODE(S). THE GROUNDING ELECTRODE CONDUCTOR FROM THE POLE GROUNDING LUG, CONTROLLER CABINET AND/OR LUMINAIRE MAY ATTACH TO THIS CONTINUOUS GROUNDING ELECTRODE CONDUCTOR FROM THE SERVICE METER AND DISCONNECT. THE CONTRACTOR SHALL PERFORM A RESISTANCE TO GROUND TEST ON THE CONTINUOUS GROUNDING ELECTRODE CONDUCTOR FROM THE SERVICE METER AND DISCONNECT AND PROVIDE A WRITTEN STATEMENT TO THE AREA ELECTRICAL INSPECTOR THAT THE GROUNDING ELECTRODE CONDUCTOR IS CONTINUOUS FROM THE SERVICE METER AND DISCONNECT AND THE RESISTANCE TO GROUND IS 25 OHMS OR LESS.

11. HORIZONTAL MEMBERS SHALL BE CAMBERED AND THE VERTICAL POLES BACK RAKED (WHERE APPLICABLE) TO THE ANTICIPATED DEAD LOAD DEFLECTION PLUS THE CAMBER, IF ANY, SPECIFIED ON THE PLANS.

12. AN EQUIVALENT ALTERNATE DESIGN MAY BE SUBSTITUTED FOR THE DETAILS AND MATERIALS SHOWN.

13. THE DETAILS OF DESIGN FOR THE STRUCTURE AND FOUNDATION(S) ARE TO BE SUPPLIED BY THE CONTRACTOR AND/OR BY THE MANUFACTURER. THE STRUCTURE SHALL BE DESIGNED TO RESIST THE MAXIMUM LOADING AS OUTLINED IN THE AASHTO STANDARD SPECIFICATIONS (SEE NOTE 2). ALL DESIGN CALCULATIONS FOR THE STRUCTURE AND THE FOUNDATION(S) SHALL BE CHECKED AND STAMPED BY AN ENGINEER REGISTERED IN THE STATE OF VERMONT PRIOR TO SUBMITTAL OF THE FABRICATION DRAWINGS TO THE VERMONT AGENCY OF TRANSPORTATION.

14. THE CONTRACTOR SHALL SUBMIT THREE (3) COPIES OF THE DESIGN CALCULATIONS TO THE VERMONT AGENCY OF TRANSPORTATION, PROJECT MANAGER, SHOWING THE FOLLOWING INFORMATION FOR EACH OF THE VERTICAL AND HORIZONTAL COMPONENTS OF THE STRUCTURE AND FOUNDATION:

A. THE DESIGN AXIAL AND SHEAR FORCES AND BENDING AND TORSIONAL MOMENTS ACTING AT THE TOP OF THE FOUNDATION.

B. THE DESIGN AXIAL, BENDING AND SHEAR STRESSES AND THE COMBINED STRESS RATIO.

C. THE ALLOWABLE AXIAL, BENDING, AND SHEAR STRESSES.

D. ITEMS A, B, D - SHALL BE SHOWN FOR EACH OF THE GROUP LOADINGS (I,II,III) AND FOR THE BASIC WIND LOAD APPLIED TO THE TWO CASES OUTLINED IN THE AASHTO STANDARD SPECIFICATIONS (SEE NOTE 2) SECTION 1.2.5 (D)(4).

E. FAILURE TO SUPPLY THE PROPER DESIGN INFORMATION SHALL BE CAUSE FOR REJECTION OF THE STRUCTURE.

F. A MINIMUM OF FOUR (4) WEEKS SHALL BE REQUIRED FOR REVIEW BY THE VERMONT AGENCY OF TRANSPORTATION AND THE ENGINEER OF RECORD (VHB, INC).

G. EVERY MEMBER AND CONNECTION IN AN OVERHEAD TRAFFIC SIGN SUPPORT SHALL HAVE A MAXIMUM DESIGN RATIO OF 85% TO PROVIDE RESIDUAL CAPACITY FOR FUTURE MODIFICATIONS TO SIGN SIZE OR CONFIGURATIONS.

15. FABRICATION DRAWINGS (6 COPIES OF EACH) SHALL BE SUBMITTED TO THE STATE OF VERMONT, AGENCY OF TRANSPORTATION, PROJECT MANAGER FOR APPROVAL PRIOR TO FABRICATION. THE FABRICATION DRAWINGS SHALL INCLUDE THE FOLLOWING INFORMATION:

A. DETAILED DRAWING OF EACH COMPONENT OF THE STRUCTURE.

B. MATERIAL SPECIFICATION FOR EACH COMPONENT OF THE STRUCTURE, EITHER BY COMPLETE SPECIFICATION OR REFERENCE TO APPLICABLE ASTM STANDARDS.

C. NOTATION OF PROJECT NAME, PROJECT NUMBER, ROUTE NUMBER, AND STRUCTURE STATIONING (TO BE INCLUDED ON EACH SHEET).

D. DETAILS FOR LOCATION OF SIGNS/SIGNALS AND ATTACHMENT HARDWARE FOR THE SUPPORT STRUCTURE.

E. ALL ELEVATIONS AND DIMENSIONS NECESSARY TO PROVIDE A COMPLETE SET OF RECORD PLANS.

F. DEAD LOAD DEFLECTION AND CAMBER INFORMATION.

G. WELDING DETAILS AND PROCEDURES ARE REQUIRED FOR ALL WELDS. PROCEDURES SHALL BE SUBMITTED FOR APPROVAL WITH REFERENCE TO EACH WELD IDENTIFIED ON THE FABRICATION DRAWINGS. (SEE SUB-SECTION 506.10).

H. THE CONTRACTOR SHALL BE RESPONSIBLE FOR COMPLETION OF THE STRUCTURE AND FOUNDATION DATA ON THE DETAIL SHEETS.

SEE NEXT SHEET FOR CONTINUATION OF TRAFFIC SIGNAL PLAN NOTES.

TRAFFIC SIGNAL PLAN NOTES (CONTINUED)

16. THE TRAFFIC SIGNALS SHALL BE MOUNTED TO THE ARM OR POLE USING A FIXED MOUNT SYSTEM, UNLESS OTHERWISE NOTED ON THE CROSS SECTION SHEET. FOR SIGNALS MOUNTED ON A MAST ARM, THE MAST ARM AND MOUNTING POINT SHALL BE IN THE MIDDLE OF THE SIGNAL HEAD.

17. BASE PLATES SHALL BE STAMPED WITH THE VERTICAL POLE DIAMETER, HEIGHT, YIELD STRENGTH, GAUGE AND THE HORIZONTAL MEMBER DIAMETER, LENGTH, YIELD STRENGTH, GAUGE. ALTERNATELY, THE INFORMATION MAY BE STAMPED ON A METAL TAG RIVETED TO THE POLE NEAR THE HAND HOLE.

18. SEE STANDARD E-171A FOR ADDITIONAL NOTES.

19. SEE SHEETS 112-124 FOR SIGNALIZED INTERSECTION LAYOUTS.

20. SEE SPECIAL PROVISIONS FOR ADDITIONAL DETAILS FOR:
    - A ACCESSIBLE PEDESTRIAN SIGNALS
    - B RADAR STOP BAR DETECTION SYSTEM
    - C PAINTED SIGNAL STRUCTURES

21. FOLLOWING ACCEPTANCE OF THE NEW SIGNAL EQUIPTMENT, THE EXISTING SIGNAL EQUIPTMENT, CONTROLLERS AND STOP CONTROL DEVICES SHALL BE SALVAGE TO THE CITY OF ST ALBANS AT A LOCATION DIRECTED BY THE RESIDENT ENGINEER. ALL OTHER REMOVED SIGNAL EQUIPTMENT THAT IS NOT REQUIRED OR ACCEPTED BY THE CITY SHALL BE REMOVED AND DISPOSED OF BY THE CONTRACTOR IN A MANOR ACCEPTABLE TO THE ENGINEER.

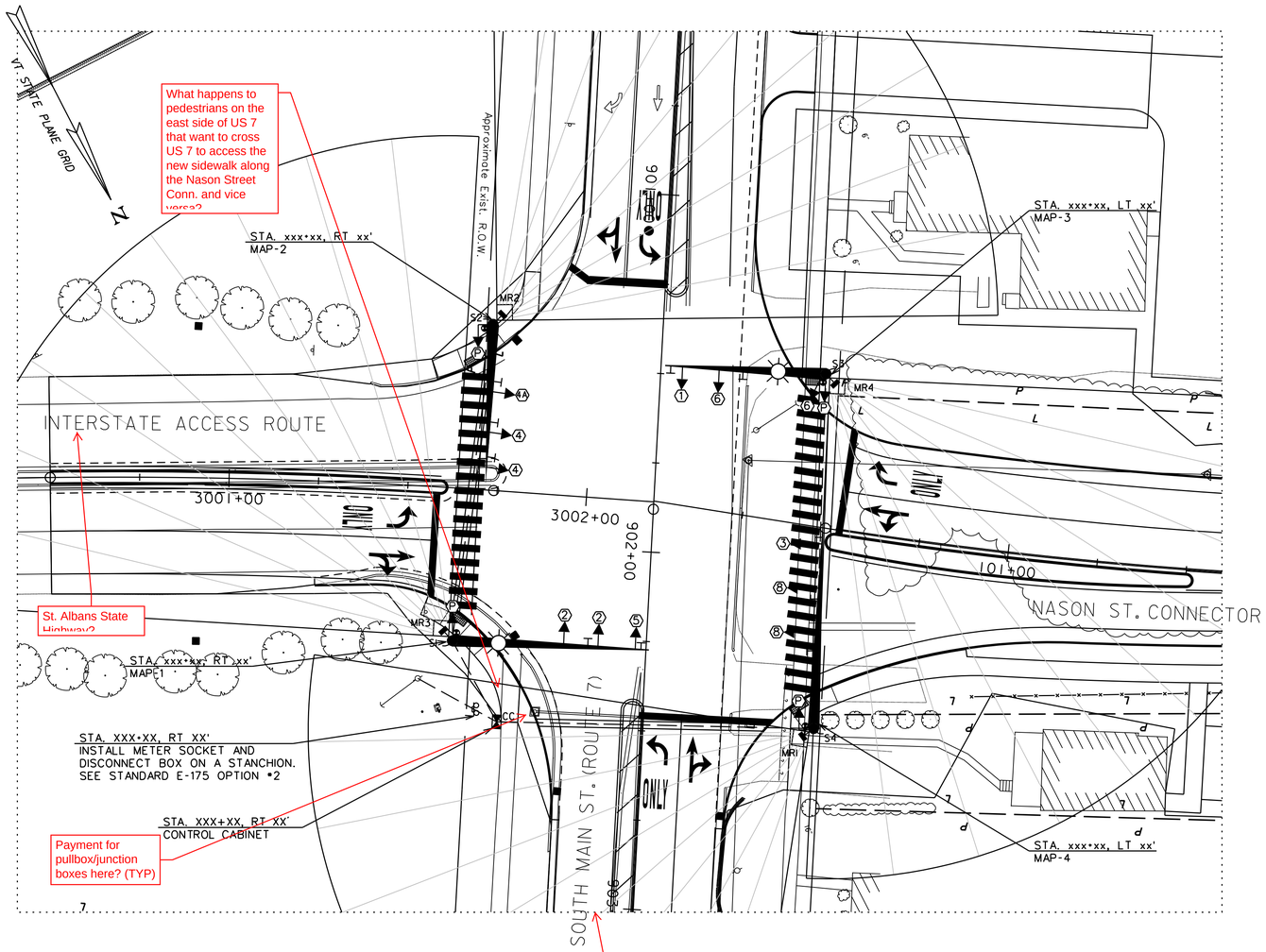

LIST OF MAJOR EQUIPMENT
SOUTH MAIN ST AND NASON ST INTERSECTION

EQUIPMENT ITEM 678.15	QUANTITY	EQUIPMENT ITEM 678.15	QUANTITY
TRAFFIC SIGNAL CONTROLLER ECONOLITE MODEL ASC/3 (TS2, TYPE 2) OR APPROVED EQUAL	1	ONE WAY, 3-SECTION, 12-INCH POLYCARBONATE MAST ARM MOUNTED LED TRAFFIC SIGNAL HEAD WITH TUNNEL VISORS AND LOUVERED BACKPLATES WITH ALL PIECES PAINTED BLACK	12
P44 BASE MOUNTED CONTROLLER CABINET WITH EXTENDED BASE ON A CONCRETE FOUNDATION PAINTED BLACK WITH ANCILLARY CONTROL EQUIPMENT	1	BRACKET MOUNTED 16-INCH LED COUNTDOWN PEDESTRIAN SIGNAL HEADS PAINTED BLACK	4
BLACK PAINTED STEEL MAST ARM SIGNAL POLE WITH 45 FOOT MAST ARM (MAP-2)	1	VTRANS SPEC ACCESSIBLE PEDESTRIAN PUSHBUTTONS WITH R10-3e TYPE SIGN ASSEMBLY	4
BLACK PAINTED STEEL MAST ARM SIGNAL POLE WITH 45 FOOT MAST ARM AND 8 FOOT LIGHTING BRACKET ARM (MAP-3)	1	ASTRO-BRACKETS OR EQUAL	12
		BRACKET SIGNAL MOUNTINGS	4
BLACK PAINTED STEEL MAST ARM SIGNAL POLE WITH 55 FOOT MAST ARM AND 8 FOOT LIGHTING BRACKET ARM (MAP-1)	1	MATRIX RADAR SENSORS WITH SENSOR CABLES OR EQUAL	4
		METER SOCKET DISCONNECT WITH BYPASS ON PEDESTAL	1
BLACK PAINTED STEEL MAST ARM SIGNAL POLE WITH 55 FOOT MAST ARM (MAP-4)	1	GPS UNIT	1

RADAR STOP BAR DETECTOR SCHEDULE

ITEM 678.15

DETECTORS					SETTINGS	
PLAN ID	STREET	DIRECTION	LANE	CALL Ø	TYPE	DETECTOR NUMBER
MR1	SOUTH MAIN ST	SOUTHBOUND	ALL APPROACHES	1/6	RADAR	1
MR2	SOUTH MAIN ST	NORTHBOUND	ALL APPROACHES	2/5	RADAR	2
MR3	ST ALBANS STATE HWY ACCESS	WESTBOUND	ALL APPROACHES	3/8	RADAR	3
MR4	NASON ST CONNECTOR	EASTBOUND	ALL APPROACHES	4	RADAR	4

ALL DETECTION SHOULD BE SET TO NON LOCKING OPERATIONS

ELECTRICAL CONDUIT SCHEDULE

ITEM 678.21

I.D.	STATION	TYPE
S1		SPARE SWEEP AT MAP-1
S2		SPARE SWEEP AT MAP-2
S3		SPARE SWEEP AT MAP-3
S4		SPARE SWEEP AT MAP-4

SIGNAL FACE ARRANGEMENT

(12" LED LENSES W/ 5" BACKPLATES) (16" LED)

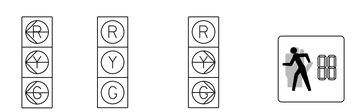

EQUIPMENT NOTES

(A) SEE STANDARDS E-170, 171A, 171B, 171C, 173, & 175 FOR ADDITIONAL INFORMATION.

(B) SEE TRAFFIC SIGNAL NOTE SHEETS 110,111 AND 113 AND SINGLE MAST ARM CANTILEVER/FOOTING DETAIL SHEET 114 FOR ADDITIONAL INFORMATION.

(C) FOR SIGN DETAILS, SEE SHEETS 94-109.

Typically VTrans shows the detection zones similar to where a loop would have been cut- but we also option different radar detectors with different preferred mountings. This is a designer preference.

LEGEND

NEW	LEGEND
CC	CONTROLLER CABINET
	SIGNAL HEAD
	CONDUIT
	PEDESTAL POST
	STANCHION
	MAST ARM
	PEDESTRIAN PUSH BUTTON
PB	PULL BOX
	OVERHEAD SIGN
	LUMINAIRE
MR#	MATRIX RADAR SENSOR
	MATRIX RADAR DETECTION ZONE

WIRED CONDUIT (PVC) AND ELECTRICAL CONDUIT SLEEVE SCHEDULE

ITEM NUMBER	678.21	678.23	678.30	
FROM/TO	ELECTRICAL CONDUIT SPARE 2"	WIRED CONDUIT 2"	CONDUIT SLEEVE 8"	DESCRIPTION
POWER TO STANCHION	15	15		POWER (INCLUDES RISER)
STANCHION TO CABINET	5	5		POWER
CABINET TO MAP-1	25	50		MAP-1, MAP-2 (3 RUNS)
MAP-1 TO MAP-2	90	180	70	MAP-2 (3 RUNS)
CABINET TO MAP-4	90	180	65	MAP-4, MAP-3 (3 RUNS)
MAP-4 TO MAP-3	100	200	85	MAP-3 (3 RUNS)
SUB-TOTALS	325	630	220	
ROUNDING	5	5	5	
TOTALS	330	635	225	

2016 DHV WEEKDAY TRAFFIC DATA

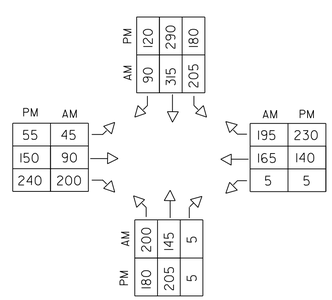

0 20 40
SCALE IN FEET

vhb

PROJECT NAME: ST. ALBANS
PROJECT NUMBER: HPP 8000(17 101/100

FILE NAME: 57414_TSPS1.dgn
PROJECT LEADER: M.A. COLGAN
DESIGNED BY: M. GRAHAM
TRAFFIC SIGNAL SHEET (1 OF 3)

PLOT DATE: 3/4/2016
DRAWN BY: J. ROBERT
CHECKED BY: C. BOBAY
SHEET 112 OF 230

TRAFFIC SIGNAL NOTES

Previous sheet indicates Econolite only.

A. NEW EQUIPMENT

1. ALL SIGNAL HEADS MOUNTED ON CANTILEVER ARMS SHALL BE POLYCARBONATE. BACKPLATES SHALL BE REQUIRED ON ALL SIGNAL HEADS.
2. THE TRAFFIC SIGNAL CONTROLLER AND ANCILLARY EQUIPMENT SHALL BE MANUFACTURED BY ECONOLITE CONTROL PRODUCTS, INC. OR NAZTEC, INC. OR APPROVED EQUIVALENT. TRAFFIC SIGNAL CONTROLLER SHALL BE NEMA TS2, TYPE 2, PROVIDED IN A NEMA "P" TYPE GROUND MOUNTED CABINET WITH BASE EXTENSION INSTALLED AS SHOWN ON THE TRAFFIC SIGNAL PLAN.
3. A DISCONNECT BREAKER FOR EACH CIRCUIT SHALL BE INSTALLED IN A RAINPROOF (NEMA 3R), LOCKED CABINET ON A STANCHION NEXT TO OR BELOW THE METER SOCKET. RECOMMEND OPTION #2 ON STD E-175.
4. ALL SIGNAL HEADS SHALL BE 12-INCH LIGHT EMITTING DIODES (LED).
5. LUMINAIRE ON MAST ARM SHALL BE AN L.E.D. FIXTURE.
6. ALL SIGNAL EQUIPMENT SHALL BE PAINTED FLAT BLACK INCLUDING MAST ARM POLES, MAST ARMS, AND LUMINAIRE BRACKET ARMS.

B. SIGNAL OPERATION

1. UPON STARTUP THE SIGNAL TIMINGS SHOWN ON THE PLANS MAY REQUIRE FINE-TUNING IN THE FIELD BASED ON TRAFFIC OBSERVATION.
2. THE TRAFFIC SIGNALS SHALL NOT BE OPERATED BEFORE PAVEMENT MARKINGS AND SIGNAL RELATED SIGNING IS IN PLACE.
3. ALL SIGNALS SHALL DWELL ON THE US 7 THRU MOVEMENT PHASES (2+6).
4. US 7 THRU PHASES 2+6 SHALL BE USED FOR THE START-UP PHASE FOLLOWING FLASHING OPERATION.
5. THE EASTBOUND RIGHT TURN SHALL OPERATE AS AN OVERLAP TO PHASE 5

C. TRAFFIC SIGNAL CONDUIT

1. ALL TRAFFIC SIGNAL CONDUIT SHALL BE PVC, SCHEDULE 80
2. MINIMUM CONDUIT SIZES SHALL BE 2-INCH FOR ALL APPLICATIONS
3. WHEN new CONDUIT IS PLACED BELOW THE ROADWAY OR ACROSS SIDE ROADS, IT SHALL BE PLACED IN AN PVC ELECTRICAL CONDUIT SLEEVE, SIZE AS SHOWN ON THE PLANS (8" MINIMUM OR MATCHING EXISTING SLEEVE SIZE).
4. WHERE PLANS INDICATE 2 CONDUIT RUNS, 1 SHALL BE FOR THE SIGNAL CABLE AND 1 SHALL BE A SPARE CONDUIT. WHERE PLANS INDICATE 3 CONDUIT RUNS, 1 SHALL BE FOR THE SIGNAL CABLE, 1 SHALL BE FOR THE RADAR DETECTION, AND 1 SHALL BE A SPARE CONDUIT.

D. VEHICLE DETECTION

1. WAVETRANIX MATRIX RADAR SENSORS SHALL BE INSTALLED ON THE SIGNAL POLE UPRIGHT BELOW THE MAST ARM AND AIMED TO PICK UP VEHICLE DETECTION
2. ANY CABLE FOR THE RADAR STOP BAR DETECTION SHALL BE INCIDENTAL TO ITEM 678.15.
3. ALL DETECTORS SHALL FAIL IN THE "ON" MODE.

E. GENERAL

1. THE CONTRACTOR SHALL ACQUIRE ALL NECESSARY PERMITS AND MAKE ALL NECESSARY ARRANGEMENTS WITH THE UTILITY COMPANY TO MAINTAIN THE EXISTING POWER SUPPLY TO THE SIGNAL EQUIPMENT.
2. SEE SUPPLEMENTAL SPECIFICATIONS FOR SECTIONS 678, 679, 752 & 753 FOR ADDITIONAL INFORMATION.
3. SEE THE CONTROLLER ID PLAQUE DETAIL ON THIS SHEET.

TIMING AND PHASING

PHASE 2+6 (DWELL)

		R/W	CLEAR TO Ø 9		Ø 3+8		Ø 4+8		Ø 1+5	
OFF PEAK REST OF DAY	VEHICLE	3								
	MINIMUM	10	4	2	4	2	4	2	4	2
	MAXIMUM	35	4	2	4	2	4	2	4	2
	MAXIMUM2									
	MAXIMUM3									
	PED ACT									
AM PEAK 6-8 AM	VEHICLE	3								
	MINIMUM	10	4	2	4	2	4	2	4	2
	MAXIMUM	25	4	2	4	2	4	2	4	2
	MAXIMUM2									
	MAXIMUM3									
	PED ACT									
PM PEAK 2-6 PM	VEHICLE	3								
	MINIMUM	10	4	2	4	2	4	2	4	2
	MAXIMUM	40	4	2	4	2	4	2	4	2
	MAXIMUM2									
	MAXIMUM3									
	PED ACT									
	FACE 1	~~R~~	~~R~~	~~R~~	~~R~~	~~R~~	~~R~~	~~R~~	~~R~~	~~R~~
	FACE 2	G	Y	R	Y	R	Y	R	Y	R
	FACE 3	~~R~~	~~R~~	~~R~~	~~R~~	~~R~~	~~R~~	~~R~~	~~R~~	~~R~~
	FACE 4	R	R	R	R	R	R	R	R	R
	FACE 4A	R	R	R	R	R	R	R	R	R
	FACE 5	~~R~~	~~R~~	~~R~~	~~R~~	~~R~~	~~R~~	~~R~~	~~R~~	~~R~~
	FACE 6	G	Y	R	Y	R	Y	R	Y	R
	FACE 8	R	R	R	R	R	R	R	R	R
	PED	DW	DW	DW	DW	DW	DW	DW	DW	DW

PHASE 9

		R/W		CLEAR TO Ø 3+8		Ø 4+8		Ø 1+5		Ø 2+6	
OFF PEAK REST OF DAY	VEHICLE – MAXIMUM3										
	PED ACT	4	20	3	1	3	1	3	1	3	1
AM PEAK 6-8 AM	VEHICLE – MAXIMUM3										
	PED ACT	4	20	3	1	3	1	3	1	3	1
PM PEAK 2-6 PM	VEHICLE – MAXIMUM3										
	PED ACT	4	20	3	1	3	1	3	1	3	1
	FACE 1	~~R~~	~~R~~	~~R~~	~~R~~	~~R~~	~~R~~	~~R~~	~~R~~	~~R~~	~~R~~
	FACE 2	R	R	R	R	R	R	R	R	R	R
	FACE 3	~~R~~	~~R~~	~~R~~	~~R~~	~~R~~	~~R~~	~~R~~	~~R~~	~~R~~	~~R~~
	FACE 4	R	R	R	R	R	R	R	R	R	R
	FACE 4A	R	R	R	R	R	R	R	R	R	R
	FACE 5	~~R~~	~~R~~	~~R~~	~~R~~	~~R~~	~~R~~	~~R~~	~~R~~	~~R~~	~~R~~
	FACE 6	R	R	R	R	R	R	R	R	R	R
	FACE 8	R	R	R	R	R	R	R	R	R	R
	PED	W	FD	DW	DW	DW	DW	DW	DW	DW	DW

PHASE 3+8

		R/W	CLEAR TO Ø 4+8		Ø 1+5		Ø 2+6	
OFF PEAK REST OF DAY	VEHICLE	3						
	MINIMUM	10	4	2	4	2	4	2
	MAXIMUM	35	4	2	4	2	4	2
	MAXIMUM2		4	2	4	2	4	2
	MAXIMUM3		4	2	4	2	4	2
	PED ACT							
AM PEAK 6-8 AM	VEHICLE	3						
	MINIMUM	10	4	2	4	2	4	2
	MAXIMUM	35	4	2	4	2	4	2
	MAXIMUM2		4	2	4	2	4	2
	MAXIMUM3		4	2	4	2	4	2
	PED ACT							
PM PEAK 2-6 PM	VEHICLE	3						
	MINIMUM	10	4	2	4	2	4	2
	MAXIMUM	40	4	2	4	2	4	2
	MAXIMUM2		4	2	4	2	4	2
	MAXIMUM3		4	2	4	2	4	2
	PED ACT							
	FACE 1	~~R~~	~~R~~	~~R~~	~~R~~	~~R~~	~~R~~	~~R~~
	FACE 2	R	R	R	R	R	R	R
	FACE 3	~~G~~	~~Y~~	~~R~~	~~Y~~	~~R~~	~~Y~~	~~R~~
	FACE 4	R	R	R	R	R	R	R
	FACE 4A	R	R	R	R	R	R	R
	FACE 5	~~R~~	~~R~~	~~R~~	~~R~~	~~R~~	~~R~~	~~R~~
	FACE 6	R	R	R	R	R	R	R
	FACE 8	G	G	G	Y	R	Y	R
	PED	DW	DW	DW	DW	DW	DW	DW

PHASE 4+8

		R/W	CLEAR TO Ø 1+5		Ø 2+6		Ø 9	
OFF PEAK REST OF DAY	VEHICLE	3						
	MINIMUM	8	4	2	4	2	4	2
	MAXIMUM	20	4	2	4	2	4	2
	MAXIMUM2							
	MAXIMUM3							
	PED ACT							
AM PEAK 6-8 AM	VEHICLE	3						
	MINIMUM	8	4	2	4	2	4	2
	MAXIMUM	20	4	2	4	2	4	2
	MAXIMUM2							
	MAXIMUM3							
	PED ACT							
PM PEAK 2-6 PM	VEHICLE	3						
	MINIMUM	8	4	2	4	2	4	2
	MAXIMUM	20	4	2	4	2	4	2
	MAXIMUM2							
	MAXIMUM3							
	PED ACT							
	FACE 1	~~R~~	~~R~~	~~R~~	~~R~~	~~R~~	~~R~~	~~R~~
	FACE 2	R	R	R	R	R	R	R
	FACE 3	~~R~~	~~R~~	~~R~~	~~R~~	~~R~~	~~R~~	~~R~~
	FACE 4	G	Y	R	Y	R	Y	R
	FACE 4A	~~G~~	~~G~~	~~G~~	~~Y~~	R	~~Y~~	R
	FACE 5	~~R~~	~~R~~	~~R~~	~~R~~	~~R~~	~~R~~	~~R~~
	FACE 6	R	R	R	R	R	R	R
	FACE 8	G	Y	R	Y	R	Y	R
	PED	DW	DW	DW	DW	DW	DW	DW

PHASE 1+5

		R/W	CLEAR TO Ø 2+6		Ø 9		Ø 3+8		Ø 4+8	
OFF PEAK REST OF DAY	VEHICLE	3								
	MINIMUM	5	4	2	4	2	4	2	4	2
	MAXIMUM	25	4	2	4	2	4	2	4	2
	MAXIMUM2									
	MAXIMUM3									
	PED ACT									
AM PEAK 6-8 AM	VEHICLE	3								
	MINIMUM	5	4	2	4	2	4	2	4	2
	MAXIMUM	25	4	2	4	2	4	2	4	2
	MAXIMUM2									
	MAXIMUM3									
	PED ACT									
PM PEAK 2-6 PM	VEHICLE	3								
	MINIMUM	5	4	2	4	2	4	2	4	2
	MAXIMUM	20	4	2	4	2	4	2	4	2
	MAXIMUM2									
	MAXIMUM3									
	PED ACT									
	FACE 1	~~G~~	~~Y~~	~~R~~	~~Y~~	~~R~~	~~Y~~	~~R~~	~~Y~~	~~R~~
	FACE 2	R	R	R	R	R	R	R	R	R
	FACE 3	~~R~~	~~R~~	~~R~~	~~R~~	~~R~~	~~R~~	~~R~~	~~R~~	~~R~~
	FACE 4	R	R	R	R	R	R	R	R	R
	FACE 4A	~~G~~	~~Y~~	R	~~Y~~	R	~~Y~~	R	~~G~~	~~G~~
	FACE 5	~~G~~	~~Y~~	~~R~~	~~Y~~	~~R~~	~~Y~~	~~R~~	~~Y~~	~~R~~
	FACE 6	R	R	R	R	R	R	R	R	R
	FACE 8	R	R	R	R	R	R	R	R	R
	PED	DW	DW	DW	DW	DW	DW	DW	DW	DW

FLASHING OPERATION

	FLASHING OPERATION
FACE 1	FR
FACE 2	FY
FACE 3	FR
FACE 4	FR
FACE 4A	FR
FACE 5	FR
FACE 6	FY
FACE 8	FR
PED	B

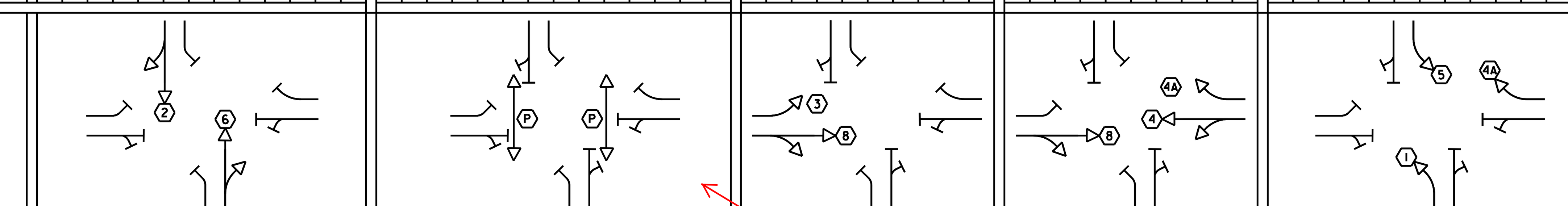

W = WALK, FD = FLASHING DON'T WALK, DW = DON'T WALK, B = BLANK, FR = FLASHING RED, FY = FLASHING YELLOW, SY = STEADY YELLOW

1. FACE NUMBERS ARE BASED ON NEMA PHASES
2. SOUTHBOUND AND NORTHBOUND LEFT-TURNS SHALL OPERATE UNDER PROTECTED PHASING
3. NASON STREET CONNECTOR RIGHT TURNS SHALL OVERLAP US 7 LEFT TURNS DURING PROTECTED PHASE.

Does exclusive ped really make sense in this location?

CONTROLLER IDENTIFICATION PLAQUE
NOT TO SCALE

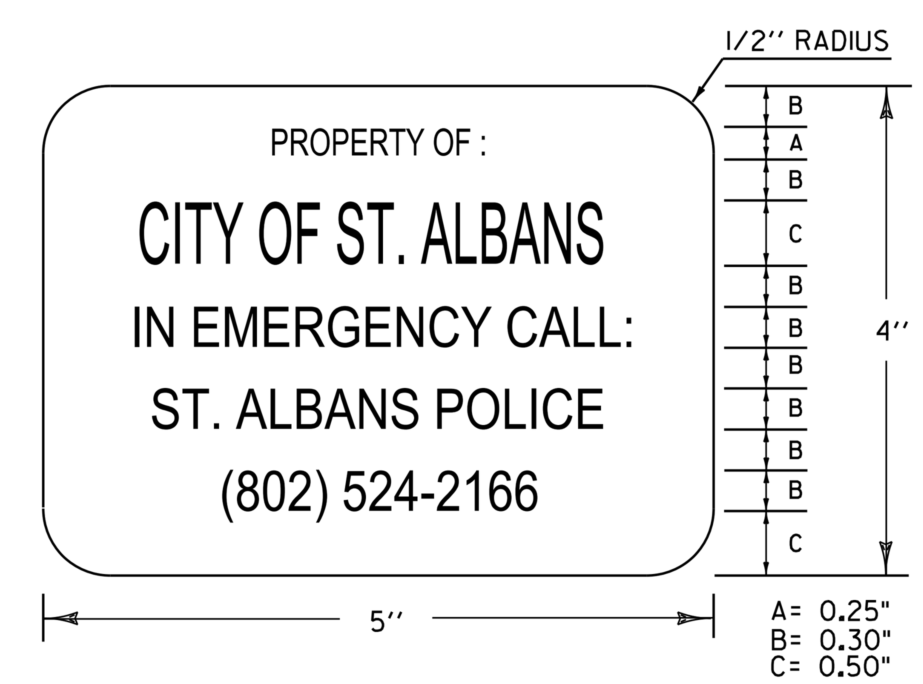

LEGEND: - BLACK (NON-REFL.) - STAMPED PRIOR TO PAINTING
BACKGROUND: NATURAL ALUMINUM OR BRASS SURFACE

NOTES:

1.) THE PLAQUE SHALL BE MOUNTED ON THE TRAFFIC SIGNAL CONTROLLER CABINET. IT SHALL BE FASTENED TO THE CONTROLLER CABINET IN SUCH A MANNER AS TO BE NOT EASILY REMOVED, SUCH AS WELDED, RIVETED OR BOLTED WITH VANDAL PROOF BOLTS.
2.) THE LETTERS SHALL BE PUNCHED OR STAMPED, SUCH STAMPING SHALL PENETRATE AT LEAST ½ THE BASE MATERIAL THICKNESS.
3.) THE BASE MATERIAL FOR THE PLAQUE SHALL BE BRASS OR ALUMINUM WITH A MINIMUM THICKNESS OF 0.100 INCHES.

PROGRAM PERIODS OF OPERATION

(Time scale: 12 AM – 12 PM – 12 AM)

	12 AM–6 AM	6–8 AM	8 AM–2 PM	2–6 PM	6 PM–12 AM
SUNDAY	1				
MONDAY	1	2	1	3	1
TUESDAY	1	2	1	3	1
WEDNESDAY	1	2	1	3	1
THURSDAY	1	2	1	3	1
FRIDAY	1	2	1	3	1
SATURDAY	1				

NOTES:

PLAN 1 - OFFPEAK (MAXIMUM 1): MIDNIGHT TO 6:00 AM, M-F
8:00 AM TO 2:00 PM, M-F
6:00 PM TO MIDNIGHT, M-F
ALL DAY SATURDAY AND SUNDAY

PLAN 2 - AM PEAK (MAXIMUM 2): 6:00 AM TO 8:00 AM, M-F

PLAN 3 - PM PEAK (MAXIMUM 3): 2:00 PM TO 6:00 PM, M-F

vhb

PROJECT NAME: ST. ALBANS
PROJECT NUMBER: HPP 8000(17)

FILE NAME: 57414_TSPSIA.dgn
PROJECT LEADER: M.A. COLGAN
DESIGNED BY: M. GRAHAM
TRAFFIC SIGNAL SHEET (2 OF 3)
PLOT DATE: 3/4/2016
DRAWN BY: J. ROBERT
CHECKED BY: C. BOBAY
SHEET 113 OF 230

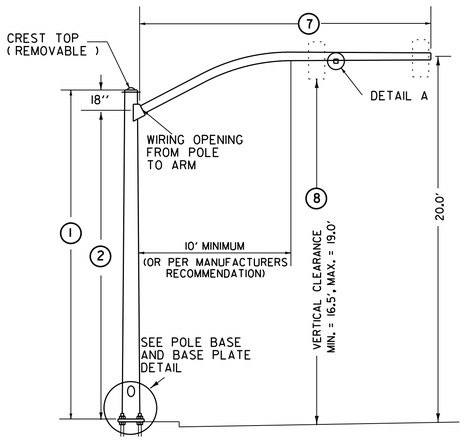

TYPE AI

(SPECIAL CURVED MAST ARM)

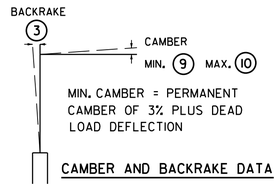

CAMBER AND BACKRAKE DATA

POLE BASE DIAMETER 4

POLE GAUGE 5

POLE TAPER RATE 6

ARM DIAMETER 11

ARM GAUGE 12

ARM TAPER RATE 13

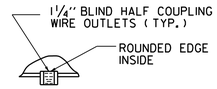

DETAIL A

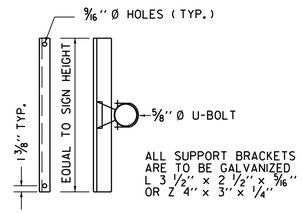

SIGN ON SINGLE
MAST ARM

SIGN BRACKET DETAILS

ANCHOR BOLT DETAIL		
SIZE	L(IN)	T(IN)
1- 1/4" X 48"	42	8
1- 1/2" X 60"	54	9
1- 3/4" X 90"	84	9
2" X 96"	96	9

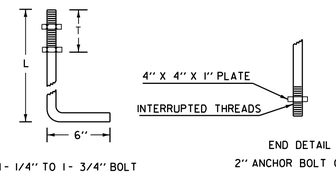

ANCHOR BOLT DETAIL

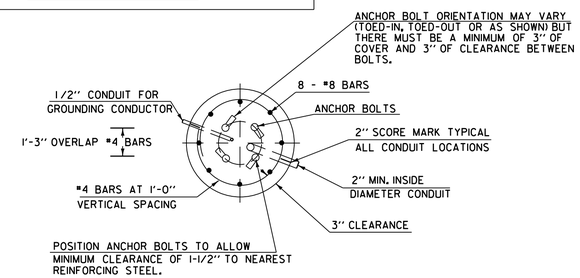

SECTION

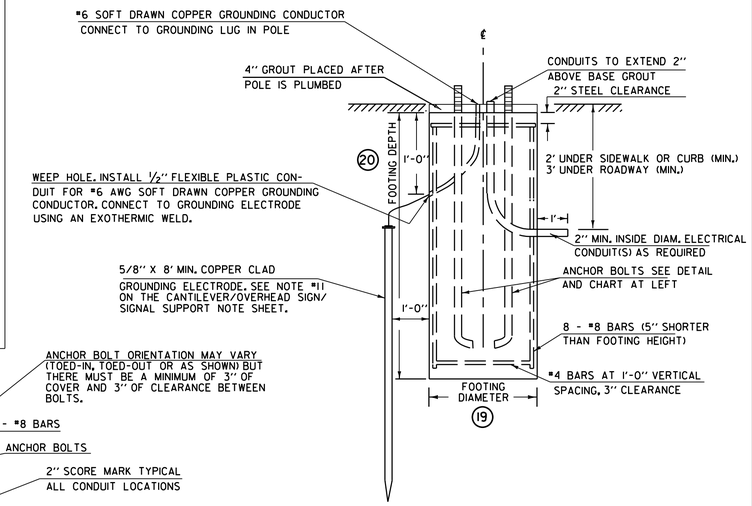

ELEVATION

CANTILEVER FOOTING DETAIL

(SPREAD FOOTINGS OR PILES ARE OPTIONAL)

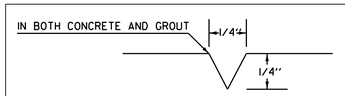

USED FOR CONDUIT LOCATION, SEE SECTION
DETAIL AT LEFT

2" SCORE MARK DETAIL

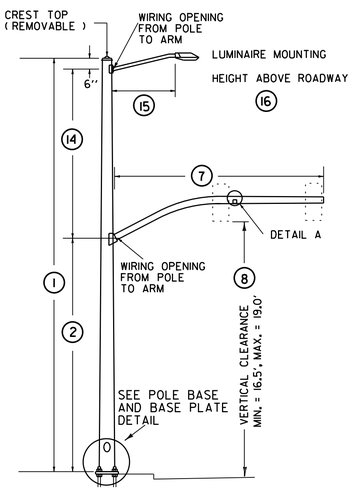

TYPE BI

(SPECIAL CURVED MAST ARM)

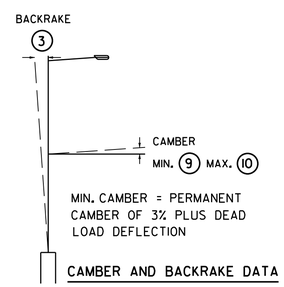

CAMBER AND BACKRAKE DATA

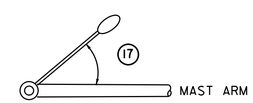

LUMINAIRE ORIENTATION

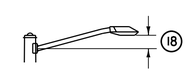

LUMINAIRE ARM RISE

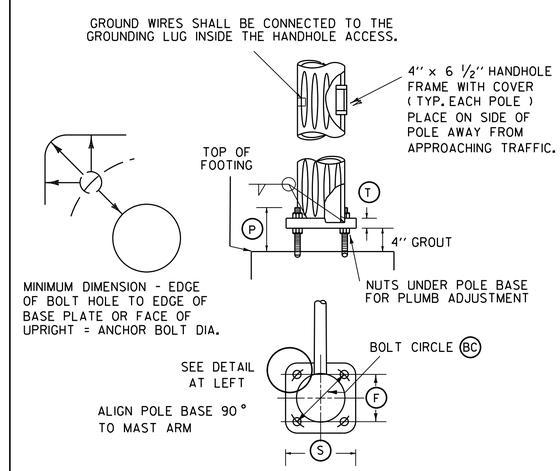

POLE BASE AND BASE PLATE DETAIL

STRUCTURE DIMENSIONS

		POLE DATA						ARM DATA							LIGHTING DATA					FOOTING DATA		BASE PLATE / BOLT DATA					
POLE	TYPE	1	2	3	4	5	6	7	8	9	10	11	12	13	14	15	16	17	18	19	20	BC	F	S	T	P	ANCHOR BOLT SIZE
MAP-1	BI	33	16					55	18						12.5	8		45	2								
MAP-2	AI	21.5	16					45	18																		
MAP-3	BI	33	16					45	18						12.5	8		45	2								
MAP-4	AI	21.5	16					55	18																		

NOTE:
DETAILS
NTS

SINGLE MAST ARM CANTILEVER / FOOTING DETAIL SHEET

PREPARED BY JAR DATE $$$DATE$$$
CHECKED BY CMB DATE $$$DATE$$$
DESIGN SUPERVISOR _____ DATE _____
PROJ. ST. ALBANS
HPP 8000(17 101/100)
TRAFFIC SIGNAL SHEET NO. 3
SHEET 114 OF 230 SHEETS

VHB 57414.00

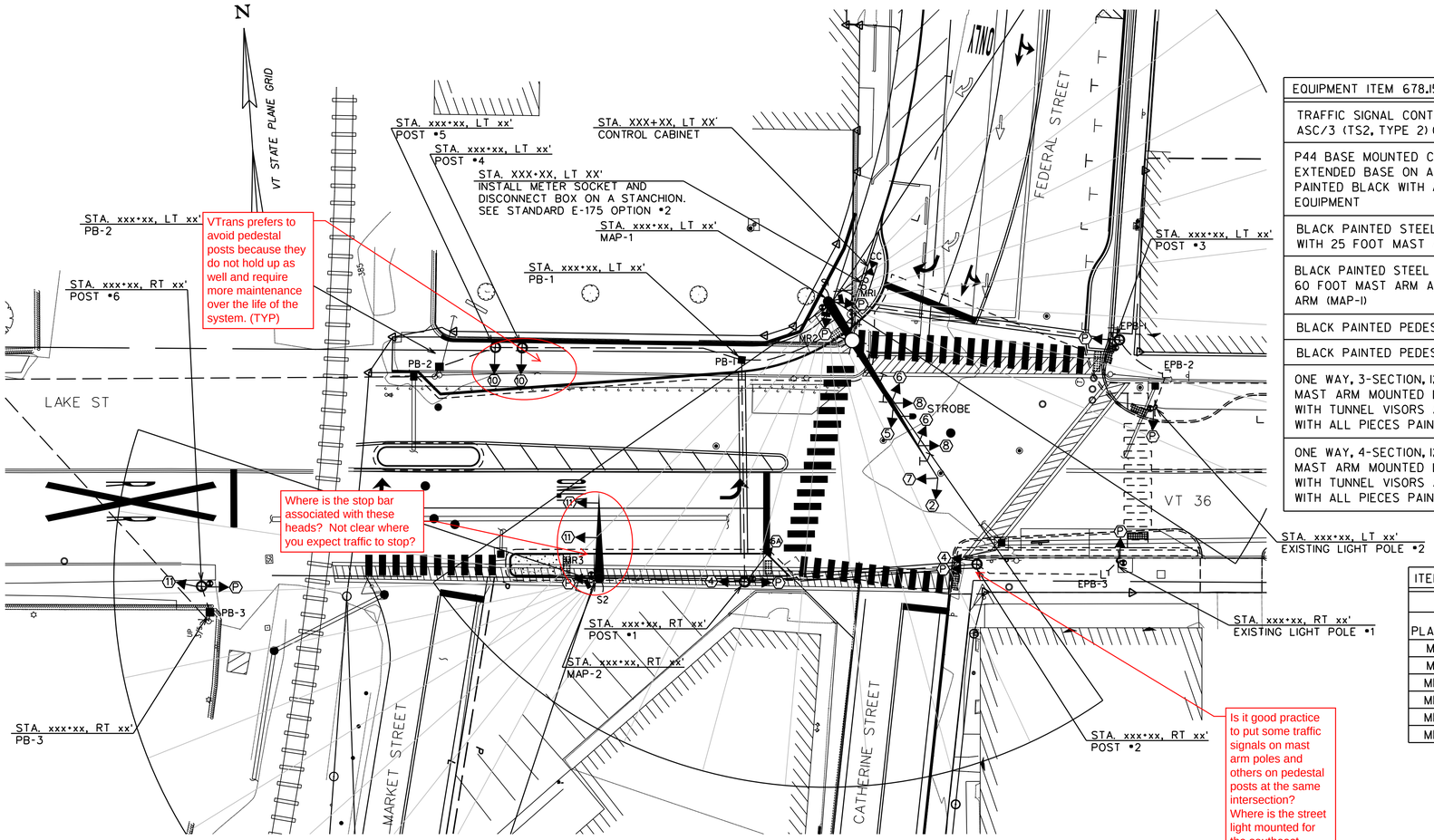

LIST OF MAJOR EQUIPMENT
LAKE ST AND FEDERAL / CATHERINE ST INTERSECTION

EQUIPMENT ITEM 678.15	QUANTITY
TRAFFIC SIGNAL CONTROLLER ECONOLITE MODEL ASC/3 (TS2, TYPE 2) OR APPROVED EQUAL	1
P44 BASE MOUNTED CONTROLLER CABINET WITH EXTENDED BASE ON A CONCRETE FOUNDATION PAINTED BLACK WITH ANCILLARY CONTROL EQUIPMENT	1
BLACK PAINTED STEEL MAST ARM SIGNAL POLE WITH 25 FOOT MAST ARM (MAP-2)	1
BLACK PAINTED STEEL MAST ARM SIGNAL POLE WITH 60 FOOT MAST ARM AND 8 FOOT LIGHTING BRACKET ARM (MAP-1)	1
BLACK PAINTED PEDESTAL POST (8-FOOT)	1
BLACK PAINTED PEDESTAL POST (10-FOOT)	5
ONE WAY, 3-SECTION, 12-INCH POLYCARBONATE MAST ARM MOUNTED LED TRAFFIC SIGNAL HEAD WITH TUNNEL VISORS AND LOUVERED BACKPLATES WITH ALL PIECES PAINTED BLACK	13
ONE WAY, 4-SECTION, 12-INCH POLYCARBONATE MAST ARM MOUNTED LED TRAFFIC SIGNAL HEAD WITH TUNNEL VISORS AND LOUVERED BACKPLATES WITH ALL PIECES PAINTED BLACK	2

EQUIPMENT ITEM 678.15	QUANTITY
BRACKET MOUNTED 16-INCH LED COUNTDOWN PEDESTRIAN SIGNAL HEADS PAINTED BLACK	4
PEDESTAL MOUNTED 16-INCH LED COUNTDOWN PEDESTRIAN SIGNAL HEADS PAINTED BLACK	6
VTRANS SPEC ACCESSIBLE PEDESTRIAN PUSHBUTTONS WITH R10-3e TYPE SIGN ASSEMBLY	8
ASTRO-BRACKETS OR EQUAL	7
BRACKET SIGNAL MOUNTINGS	4
MATRIX RADAR SENSORS WITH SENSOR CABLES OR EQUAL	3
METER SOCKET DISCONNECT WITH BYPASS ON PEDESTAL	1
RAILROAD PREEMPTION SYSTEM	1
WIRELESS RADIO INTERCONNECT SYSTEM	1
RAILROAD PREEMPTION STROBE	1
RAILROAD PREEMPTION CONNECTION	1
GPS UNIT	1

RADAR STOP BAR DETECTOR SCHEDULE

ITEM 678.15

DETECTORS					SETTINGS	
PLAN ID	STREET	DIRECTION	LANE	CALL Ø	TYPE	DETECTOR NUMBER
MR1	FEDERAL ST	SOUTHBOUND	ALL APPROACHES	6	RADAR	1
MR1	LAKE ST	WESTBOUND	ALL APPROACHES	8	RADAR	1
MR2	CATHERINE ST	NORTHBOUND	ALL APPROACHES	2	RADAR	2
MR2	LAKE ST	EASTBOUND	ALL APPROACHES	4/7	RADAR	2
MR3	MARKET ST	NORTHBOUND	ALL APPROACHES	10	RADAR	3
MR3	LAKE ST	WESTBOUND	ALL APPROACHES	11	RADAR	3

ELECTRICAL CONDUIT SCHEDULE

ITEM 678.21

I.D.	STATION	TYPE
S1		SPARE SWEEP AT MAP-1
S2		SPARE SWEEP AT MAP-2

WIRED CONDUIT (PVC) AND ELECTRICAL CONDUIT SLEEVE SCHEDULE

ITEM NUMBER	678.21	678.23		678.30	678.15	
FROM/TO	ELECTRICAL CONDUIT SPARE 2"	WIRED CONDUIT 2"	WIRED CONDUIT 3"	CONDUIT SLEEVE 8"	SIGNAL WIRE	DESCRIPTION
POWER TO STANCHION	5	10				POWER (INCLUDES RISER)
STANCHION TO CABINET	10	5				POWER
CABINET TO PB-1	50		100			POST #1, MAP-2, POST #2, EPB-3, ELP-1, POST #4, POST #5, PB-2, PB-3, POST #6 (3 RUNS)
PB-1 TO POST #1	65		130	55		POST #1, POST #2, EPB-3, ELP-1, MAP-2 (3 RUNS)
POST #1 TO POST #2	70	70		50		POST #2, EPB-3, ELP-1 (2 RUNS)
POST #2 TO EPB-3					40	EPB-3, ELP-1 (EXISTING)
EPB-3 TO ELP-1					10	ELP-1 (EXISTING)
POST #1 TO MAP-2	45	90				MAP-2 (3 RUNS)
PB-1 TO POST #4	65	65				POST #4, POST #5, PB-2, PB-3, POST #6 (2 RUNS)
POST #4 TO POST #5	10	10				POST #5, PB-2, PB-3, POST #6 (2 RUNS)
POST #5 TO PB-2	20	20				PB-2, PB-3, POST #6 (2 RUNS)
PB-2 TO PB-3					325	PB-3, POST #6 (2 RUNS)
PB-3 TO POST #6	10	10				POST #6 (2 RUNS)
CABINET TO MAP-1	20		30			MAP-1, POST #3, EPB-2, ELP-2 (3 RUNS)
MAP-1 TO POST #3	85	85		60		POST #3, EPB-2, ELP-2 (2 RUNS)
POST #3 TO EPB-2					20	EPB-2, ELP-2 (EXISTING)
EPB-2 TO ELP-2					10	ELP-2 (EXISTING)
SUB-TOTALS	450	365	260	170	405	
ROUNDING	5	5	5	5	5	
TOTALS	455	370	265	175	410	

2016 DHV WEEKDAY TRAFFIC DATA

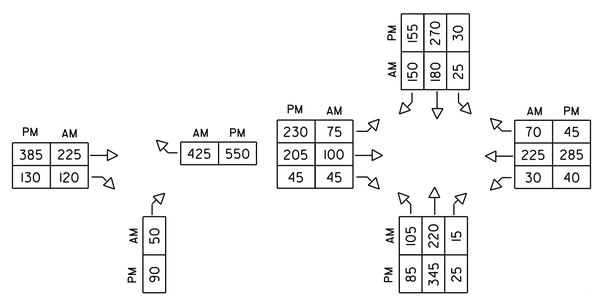

SIGNAL FACE ARRANGEMENT

(12" LED LENSES W/ 5" BACKPLATES) (16" LED)

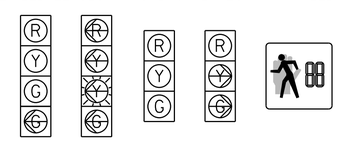

LEGEND

NEW	LEGEND
CC	CONTROLLER CABINET
	SIGNAL HEAD
	CONDUIT
	PEDESTAL POST
	STANCHION
	MAST ARM
	PEDESTRIAN PUSH BUTTON
PB	PULL BOX
	OVERHEAD SIGN
	LUMINAIRE
MR#	MATRIX RADAR SENSOR
	MATRIX RADAR DETECTION ZONE
	WIRELESS ANTENNA

EQUIPMENT NOTES

(A) SEE STANDARDS E-170, 171A, 171B, 171C, 173, & 175 FOR ADDITIONAL INFORMATION.

(B) SEE TRAFFIC SIGNAL NOTE SHEETS 110,111,AND 116 AND SINGLE MAST ARM CANTILEVER/FOOTING DETAIL SHEET 117 FOR ADDITIONAL INFORMATION.

(C) FOR SIGN DETAILS, SEE SHEETS 94-109.

0 20 40
SCALE IN FEET

vhb

PROJECT NAME: ST. ALBANS
PROJECT NUMBER: HPP 8000(17 101/100

FILE NAME: 57414_TSPS2.dgn
PROJECT LEADER: M.A. COLGAN
DESIGNED BY: M. GRAHAM
TRAFFIC SIGNAL SHEET (1 OF 3)

PLOT DATE: 3/4/2016
DRAWN BY: J. ROBERT
CHECKED BY: C. BOBAY
SHEET 115 OF 230

TRAFFIC SIGNAL NOTES

A. NEW EQUIPMENT

1. ALL SIGNAL HEADS MOUNTED ON CANTILEVER ARMS SHALL BE POLYCARBONATE. BACKPLATES SHALL BE REQUIRED ON ALL SIGNAL HEADS.
2. THE TRAFFIC SIGNAL CONTROLLER AND ANCILLARY EQUIPMENT SHALL BE MANUFACTURED BY ECONOLITE CONTROL PRODUCTS, INC. OR NAZTEC, INC. OR APPROVED EQUIVALENT. TRAFFIC SIGNAL CONTROLLER SHALL BE NEMA TS2, TYPE 2, PROVIDED IN A NEMA "P"TYPE GROUND MOUNTED CABINET WITH BASE EXTENSION INSTALLED AS SHOWN ON THE TRAFFIC SIGNAL PLAN.
3. A DISCONNECT BREAKER FOR EACH CIRCUIT SHALL BE INSTALLED IN A RAINPROOF (NEMA 3R), LOCKED CABINET ON A STANCHION NEXT TO OR BELOW THE METER SOCKET. RECOMMEND OPTION #2 ON STD E-175.
4. ALL SIGNAL HEADS SHALL BE 12-INCH LIGHT EMITTING DIODES (LED).
5. LUMINAIRE ON MAST ARM SHALL BE AN L.E.D. FIXTURE.
6. ALL SIGNAL EQUIPMENT SHALL BE PAINTED FLAT BLACK INCLUDING MAST ARM POLES, MAST ARMS, AND LUMINAIRE BRACKET ARMS.
7. A WIRELESS INTERCONNECT SYSTEM SHALL BE INSTALLED AND OPERATIONAL BETWEEN THE LAKE/FEDERAL/CATHERINE INTERSECTION AND THE LAKE/MAIN/FAIRFIELD INTERSECTION.
8. RAILROAD PREEMPTION EQUIPMENT INCLUDING CABLING AND STROBE SHALL BE PROVIDED. COORDINATION WITH THE RAILROAD TO RECEIVE THE PREEMPTION SIGNAL FROM THE RAILROAD CONTROL CABINET SHALL BE REQUIRED.

B. SIGNAL OPERATION

1. UPON STARTUP THE SIGNAL TIMINGS SHOWN ON THE PLANS MAY REQUIRE FINE-TUNING IN THE FIELD BASED ON TRAFFIC OBSERVATION.
2. THE TRAFFIC SIGNALS SHALL NOT BE OPERATED BEFORE PAVEMENT MARKINGS AND SIGNAL RELATED SIGNING IS IN PLACE.
3. ALL SIGNALS SHALL DWELL ON THE VT 36 THRU MOVEMENT PHASES (4+8).
4. VT 36 THRU PHASES 4+8 SHALL BE USED FOR THE START-UP PHASE FOLLOWING FLASHING OPERATION.
5. THE EASTBOUND LEFT TURN SHALL OPERATE WITH PROTECTED-PERMISSIVE FLASHING YELLOW ARROW PHASING.
6. FLASHING YELLOW ARROW SHALL NOT BE DISPLAYED WHEN OPERATING IN PROTECTED ONLY MODE.
7. THE SOUTHBOUND RIGHT TURN SHALL OPERATE AS AN OVERLAP TO PHASE 7

C. TRAFFIC SIGNAL CONDUIT

1. ALL TRAFFIC SIGNAL CONDUIT SHALL BE PVC, SCHEDULE 80
2. MINIMUM CONDUIT SIZES SHALL BE 2-INCH FOR ALL APPLICATIONS
3. WHEN NEW CONDUIT IS PLACED BELOW THE ROADWAY OR ACROSS SIDE ROADS, IT SHALL BE PLACED IN AN PVC ELECTRICAL CONDUIT SLEEVE, SIZE AS SHOWN ON THE PLANS (8" MINIMUM OR MATCHING EXISTING SLEEVE SIZE).
4. EXISTING PULL BOXES 1-4 WERE INSTALLED UNDER CITY OF SAINT ALBANS PROPOSED IMPROVEMENT PROJECT. EXISTING PULL BOXES 1 AND 4 SHALL BE REMOVED AND REPLACED WITH A PEDESTAL POST.
5. WHERE PLANS INDICATE 2 CONDUIT RUNS, 1 SHALL BE FOR THE SIGNAL CABLE AND 1 SHALL BE A SPARE CONDUIT. WHERE PLANS INDICATE 3 CONDUIT RUNS, 1 SHALL BE FOR THE SIGNAL CABLE, 1 SHALL BE FOR THE RADAR DETECTION, AND 1 SHALL BE A SPARE CONDUIT.
6. CONDUIT RUNS TO REACH POST 6 SHALL CONSIST OF A CONDUIT TO REACH UTILITY POLES WITH AERIAL SIGNAL WIRE TO CROSS ABOVE THE RAILROAD TRACKS. RAILROAD PREEMPTION CABLING SHALL FOLLOW THE SAME PATH.

D. VEHICLE DETECTION

1. WAVETRONIX MATRIX RADAR SENSORS SHALL BE INSTALLED ON THE SIGNAL POLE UP RIGHT BELOW THE MAST ARM AND AIMED TO PICK UP VEHICLE DETECTION.
2. ANY CABLE FOR THE RADAR STOP BAR DETECTION SHALL BE INCIDENTAL TO ITEM 678.15.
3. ALL DETECTORS SHALL FAIL IN THE "ON" MODE.

E. GENERAL

1. THE CONTRACTOR SHALL ACQUIRE ALL NECESSARY PERMITS AND MAKE ALL NECESSARY ARRANGEMENTS WITH THE UTILITY COMPANY TO MAINTAIN THE EXISTING POWER SUPPLY TO THE SIGNAL EQUIPMENT.
2. SEE SUPPLEMENTAL SPECIFICATIONS FOR SECTIONS 678, 679, 752 & 753 FOR ADDITIONAL INFORMATION.
3. SEE THE CONTROLLER ID PLAQUE DETAIL ON THIS SHEET.

Where is the RR signal preemption?

TIMING AND PHASING

PHASE 2+5+10

		R/W	CLEAR TO Ø 2+6	Ø 9	Ø 4+8	Ø 4+7
OFF PEAK REST OF DAY	VEHICLE	3				
	MINIMUM	5	4 2	4 2	4 2	4 2
	MAXIMUM	10	4 2	4 2	4 2	4 2
	MAXIMUM2					
	MAXIMUM3					
	PED ACT					
AM PEAK 6-8 AM	VEHICLE	3				
	MINIMUM	5	4 2	4 2	4 2	4 2
	MAXIMUM	10	4 2	4 2	4 2	4 2
	MAXIMUM2					
	MAXIMUM3					
	PED ACT					
PM PEAK 2-6 PM	VEHICLE	3				
	MINIMUM	5	4 2	4 2	4 2	4 2
	MAXIMUM	10	4 2	4 2	4 2	4 2
	MAXIMUM2					
	MAXIMUM3					
	PED ACT					
	FACE 2	G	G G	Y R	Y R	Y R
	FACE 4	R	R R	R R	R R	R R
	FACE 5	~~G~~ G	Y R	Y R	Y R	Y R
	FACE 6	R	R R	R R	R R	R R
	FACE 6A	R	R R	R R	R R	R R
	FACE 7	~~R~~	~~R~~ ~~R~~	~~R~~ ~~R~~	~~R~~ ~~R~~	~~R~~ ~~R~~
	FACE 8	R	R R	R R	R R	R R
	FACE 10	~~G~~	~~Y~~ R	~~Y~~ R	~~Y~~ R	~~Y~~ R
	FACE 11	R	R R	R R	R R	R R
	PED	DW	DW DW	DW DW	DW DW	DW DW

PHASE 2+6+10

		R/W	CLEAR TO Ø 9	Ø 4+8	Ø 4+7	Ø 2+5
OFF PEAK REST OF DAY	VEHICLE	3				
	MINIMUM	5	4 2	4 2	4 2	4 2
	MAXIMUM	10	4 2	4 2	4 2	4 2
	MAXIMUM2					
	MAXIMUM3					
	PED ACT					
AM PEAK 6-8 AM	VEHICLE	3				
	MINIMUM	5	4 2	4 2	4 2	4 2
	MAXIMUM	35	4 2	4 2	4 2	4 2
	MAXIMUM2					
	MAXIMUM3					
	PED ACT					
PM PEAK 2-6 PM	VEHICLE	3				
	MINIMUM	5	4 2	4 2	4 2	4 2
	MAXIMUM	40	4 2	4 2	4 2	4 2
	MAXIMUM2					
	MAXIMUM3					
	PED ACT					
	FACE 2	G	Y R	Y R	Y R	Y R
	FACE 4	R	R R	R R	R R	R R
	FACE 5	R	R R	R R	R R	R R
	FACE 6	G	Y R	Y R	Y R	Y R
	FACE 6A	R	R R	R R	R R	R R
	FACE 7	~~R~~	~~R~~ ~~R~~	~~R~~ ~~R~~	~~R~~ ~~R~~	~~R~~ ~~R~~
	FACE 8	R	R R	R R	R R	R R
	FACE 10	~~G~~	~~Y~~ R	~~Y~~ R	~~Y~~ R	~~Y~~ R
	FACE 11	R	R R	R R	R R	R R
	PED	DW	DW DW	DW DW	DW DW	DW DW

PHASE 9

		R/W	CLEAR TO Ø 4+8	Ø 4+7	Ø 2+5	Ø 2+6
OFF PEAK REST OF DAY	VEHICLE					
	MINIMUM					
	MAXIMUM					
	MAXIMUM2					
	MAXIMUM3					
	PED ACT	4 17	3 1	3 1	3 1	3 1
AM PEAK 6-8 AM	VEHICLE					
	MINIMUM					
	MAXIMUM					
	MAXIMUM2					
	MAXIMUM3					
	PED ACT	4 17	3 1	3 1	3 1	3 1
PM PEAK 2-6 PM	VEHICLE					
	MINIMUM					
	MAXIMUM					
	MAXIMUM2					
	MAXIMUM3					
	PED ACT	4 17	3 1	3 1	3 1	3 1
	FACE 2	R R	R R	R R	R R	R R
	FACE 4	R R	R R	R R	R R	R R
	FACE 5	R R	R R	R R	R R	R R
	FACE 6	R R	R R	R R	R R	R R
	FACE 6A	R R	R R	R R	R R	R R
	FACE 7	~~R~~ ~~R~~	~~R~~ ~~R~~	~~R~~ ~~R~~	~~R~~ ~~R~~	~~R~~ ~~R~~
	FACE 8	R R	R R	R R	R R	R R
	FACE 10	R R	R R	R R	R R	R R
	FACE 11	R R	R R	R R	R R	R R
	PED	W FD	DW DW	DW DW	DW DW	DW DW

PHASE 4+8 (DWELL)

		R/W	CLEAR TO Ø 4+7	Ø 2+5	Ø 2+6	Ø 9
OFF PEAK REST OF DAY	VEHICLE	3				
	MINIMUM	5	4 2	4 2	4 2	4 2
	MAXIMUM	10	4 2	4 2	4 2	4 2
	MAXIMUM2					
	MAXIMUM3					
	PED ACT					
AM PEAK 6-8 AM	VEHICLE	3				
	MINIMUM	5	4 2	4 2	4 2	4 2
	MAXIMUM	25	4 2	4 2	4 2	4 2
	MAXIMUM2					
	MAXIMUM3					
	PED ACT					
PM PEAK 2-6 PM	VEHICLE	3				
	MINIMUM	5	4 2	4 2	4 2	4 2
	MAXIMUM	20	4 2	4 2	4 2	4 2
	MAXIMUM2					
	MAXIMUM3					
	PED ACT					
	FACE 2	R	R R	R R	R R	R R
	FACE 4	G	G G	G G	G G	G G
	FACE 5	R	R R	R R	R R	R R
	FACE 6	R	R R	R R	R R	R R
	FACE 6A	R	R R	R R	R R	R R
	FACE 7	~~FY~~	~~FY~~ ~~FY~~	~~Y~~ ~~R~~	~~Y~~ ~~R~~	~~Y~~ ~~R~~
	FACE 8	G	Y R	Y R	Y R	Y R
	FACE 10	R	R R	R R	R R	R R
	FACE 11	G	Y R	Y R	Y R	Y R
	PED	DW	DW DW	DW DW	DW DW	DW DW

PHASE 4+7

		R/W	CLEAR TO Ø 2+5	Ø 2+6	Ø 9	Ø 4+8
OFF PEAK REST OF DAY	VEHICLE	3				
	MINIMUM	5	4 2	4 2	4 2	4 2
	MAXIMUM	10	4 2	4 2	4 2	4 2
	MAXIMUM2					
	MAXIMUM3					
	PED ACT					
AM PEAK 6-8 AM	VEHICLE	3				
	MINIMUM	5	4 2	4 2	4 2	4 2
	MAXIMUM	15	4 2	4 2	4 2	4 2
	MAXIMUM2					
	MAXIMUM3					
	PED ACT					
PM PEAK 2-6 PM	VEHICLE	3				
	MINIMUM	5	4 2	4 2	4 2	4 2
	MAXIMUM	20	4 2	4 2	4 2	4 2
	MAXIMUM2					
	MAXIMUM3					
	PED ACT					
	FACE 2	R	R R	R R	R R	R R
	FACE 4	G	Y R	Y R	Y R	G G
	FACE 5	R	R R	R R	R R	R R
	FACE 6	R	R R	R R	R R	R R
	FACE 6A	R	R R	R R	R R	R R
	FACE 7	~~G~~	~~Y~~ ~~R~~	~~Y~~ ~~R~~	~~Y~~ ~~R~~	~~Y~~ ~~R~~
	FACE 8	R	R R	R R	R R	R R
	FACE 10	R	R R	R R	R R	R R
	FACE 11	R	R R	R R	R R	R R
	PED	DW	DW DW	DW DW	DW DW	DW DW

FLASHING OPERATION

	FLASHING OPERATION
FACE 2	FR
FACE 4	FR
FACE 5	FR
FACE 6	FR
FACE 6A	FR
FACE 7	FR
FACE 8	FR
FACE 10	FR
FACE 11	FR
PED	B

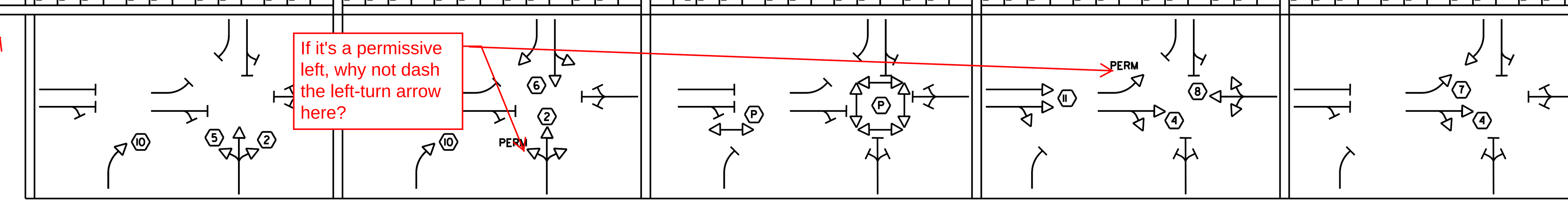

If it's a permissive left, why not dash the left-turn arrow here?

W = WALK, FD = FLASHING DON'T WALK, DW = DON'T WALK, B = BLANK, FR = FLASHING RED, FY = FLASHING YELLOW, SY = STEADY YELLOW

W = WALK, FD = FLASHING DON'T WALK, DW = DON'T WALK, B = BLANK, FR = FLASHING RED, FY = FLASHING YELLOW, SY = STEADY YELLOW

1. FACE NUMBERS ARE BASED ON NEMA PHASES
2. EASTBOUND LEFT-TURNS SHALL OPERATE UNDER PROTECTED/PERMISSIVE LEFT-TURN PHASING, USING THE 4-SECTION FLASHING YELLOW ARROW.
3. FEDERAL STREET SOUTHBOUND RIGHT TURNS SHALL OVERLAP VT 36 LEFT TURNS DURING PROTECTED PHASE.

CONTROLLER IDENTIFICATION PLAQUE
NOT TO SCALE

LEGEND: - BLACK (NON-REFL.) - STAMPED PRIOR TO PAINTING
BACKGROUND: NATURAL ALUMINUM OR BRASS SURFACE

NOTES:

1.) THE PLAQUE SHALL BE MOUNTED ON THE TRAFFIC SIGNAL CONTROLLER CABINET. IT SHALL BE FASTENED TO THE CONTROLLER CABINET IN SUCH A MANNER AS TO BE NOT EASILY REMOVED, SUCH AS WELDED, RIVETED OR BOLTED WITH VANDAL PROOF BOLTS.
2.) THE LETTERS SHALL BE PUNCHED OR STAMPED, SUCH STAMPING SHALL PENETRATE AT LEAST 1/2 THE BASE MATERIAL THICKNESS.
3.) THE BASE MATERIAL FOR THE PLAQUE SHALL BE BRASS OR ALUMINUM WITH A MINIMUM THICKNESS OF 0.100 INCHES.

PROGRAM PERIODS OF OPERATION

1 2 3 4 5 6 7 8 9 10 11 12 1 2 3 4 5 6 7 8 9 10 11 12
AM PM AM

SUNDAY	1				
MONDAY	1	2	1	3	1
TUESDAY	1	2	1	3	1
WEDNESDAY	1	2	1	3	1
THURSDAY	1	2	1	3	1
FRIDAY	1	2	1	3	1
SATURDAY	1				

NOTES:

PLAN 1 - OFFPEAK (MAXIMUM 1): MIDNIGHT TO 6:00 AM, M-F
8:00 AM TO 2:00 PM, M-F
6:00 PM TO MIDNIGHT, M-F
ALL DAY SATURDAY AND SUNDAY

PLAN 2 - AM PEAK (MAXIMUM 2): 6:00 AM TO 8:00 AM, M-F

PLAN 3 - PM PEAK (MAXIMUM 3): 2:00 PM TO 6:00 PM, M-F

PROJECT NAME:	ST. ALBANS
PROJECT NUMBER:	HPP 8000(17)
FILE NAME: 57414_TSPS2A.dgn	PLOT DATE: 3/4/2016
PROJECT LEADER: M.A. COLGAN	DRAWN BY: J. ROBERT
DESIGNED BY: M. GRAHAM	CHECKED BY: C. BOBAY
TRAFFIC SIGNAL SHEET (2 OF 3)	SHEET 116 OF 230

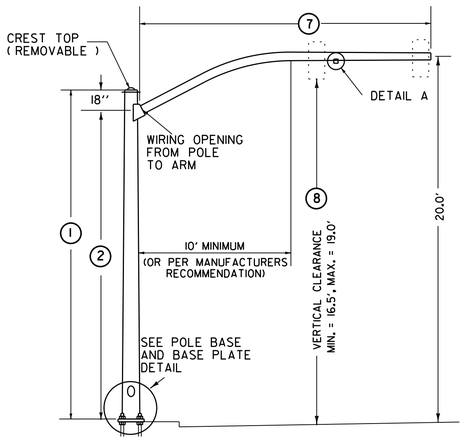

TYPE AI

(SPECIAL CURVED MAST ARM)

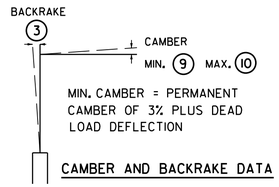

MIN. CAMBER = PERMANENT
CAMBER OF 3% PLUS DEAD
LOAD DEFLECTION

CAMBER AND BACKRAKE DATA

POLE BASE DIAMETER 4

POLE GAUGE 5

POLE TAPER RATE 6

ARM DIAMETER 11

ARM GAUGE 12

ARM TAPER RATE 13

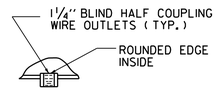

DETAIL A

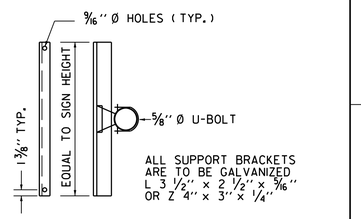

ALL SUPPORT BRACKETS
ARE TO BE GALVANIZED
L 3 1/2" x 2 1/2" x 5/16"
OR Z 4" x 3" x 1/4"

SIGN ON SINGLE
MAST ARM

SIGN BRACKET DETAILS

ANCHOR BOLT DETAIL		
SIZE	L(IN)	T(IN)
1- 1/4" X 48"	42	8
1- 1/2" X 60"	54	9
1- 3/4" X 90"	84	9
2" X 96"	96	9

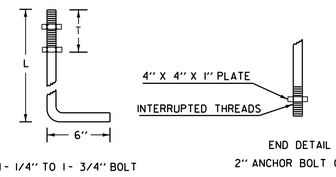

ANCHOR BOLT DETAIL

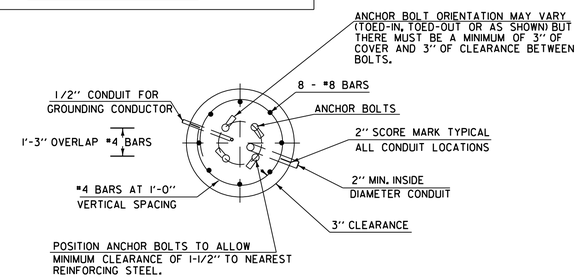

SECTION

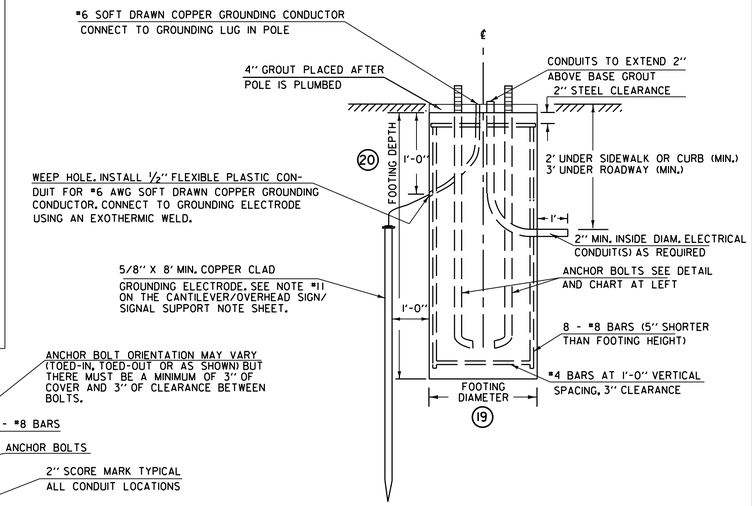

ELEVATION

CANTILEVER FOOTING DETAIL

(SPREAD FOOTINGS OR PILES ARE OPTIONAL)

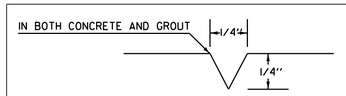

USED FOR CONDUIT LOCATION, SEE SECTION
DETAIL AT LEFT

2" SCORE MARK DETAIL

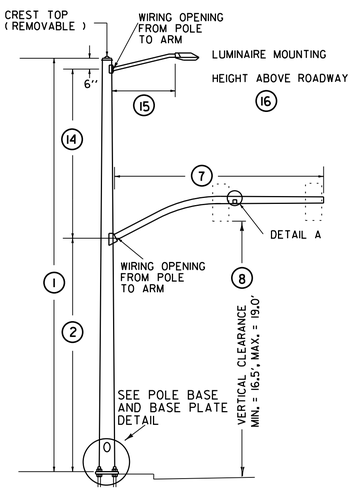

TYPE BI

(SPECIAL CURVED MAST ARM)

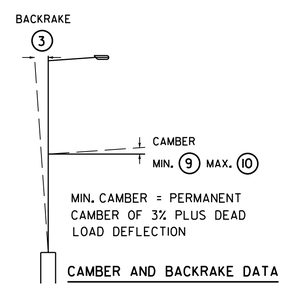

MIN. CAMBER = PERMANENT
CAMBER OF 3% PLUS DEAD
LOAD DEFLECTION

CAMBER AND BACKRAKE DATA

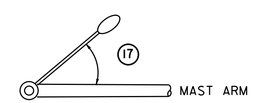

LUMINAIRE ORIENTATION

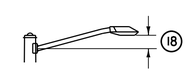

LUMINAIRE ARM RISE

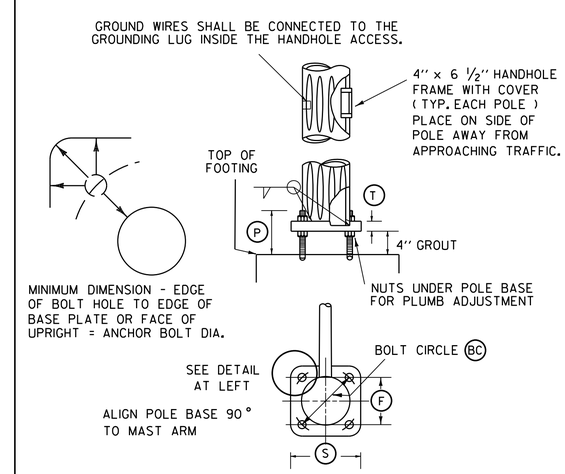

POLE BASE AND BASE PLATE DETAIL

STRUCTURE DIMENSIONS

		POLE DATA						ARM DATA							LIGHTING DATA					FOOTING DATA		BASE PLATE / BOLT DATA					
POLE	TYPE	1	2	3	4	5	6	7	8	9	10	11	12	13	14	15	16	17	18	19	20	BC	F	S	T	P	ANCHOR BOLT SIZE
MAP-1	BI	33	16					60	18						12.5	8		45	2								
MAP-2	AI	21.5	16					25	18																		

NOTE:
DETAILS
NTS

SINGLE MAST ARM CANTILEVER / FOOTING DETAIL SHEET

PREPARED BY JAR DATE $$$DATE$$$
CHECKED BY CMB DATE $$$DATE$$$
DESIGN SUPERVISOR _____ DATE _____
PROJ. ST. ALBANS
HPP 8000(17 101/100
TRAFFIC SIGNAL SHEET NO. 3
SHEET 117 OF 230 SHEETS

VHB 57414.00

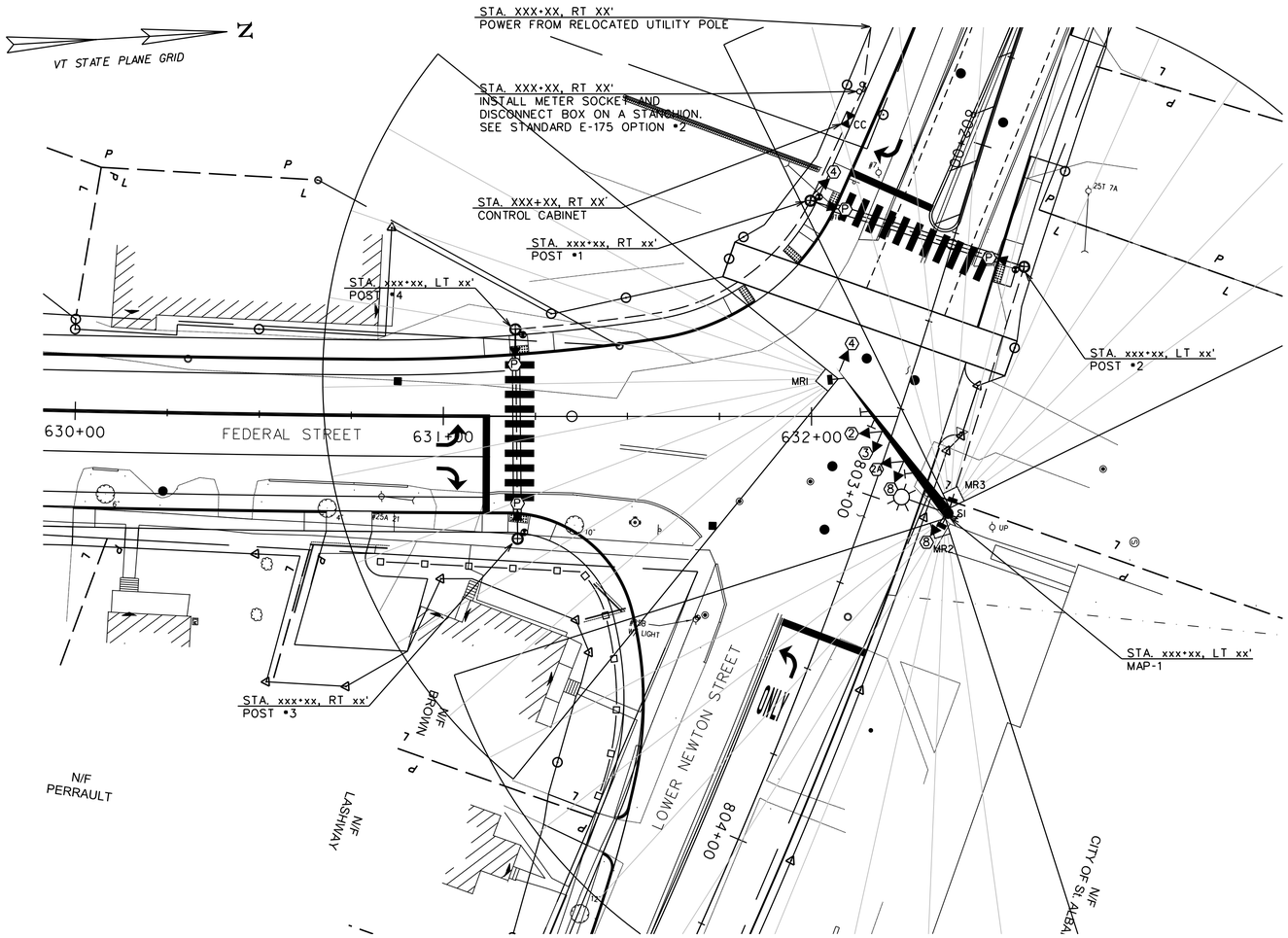

LIST OF MAJOR EQUIPMENT
LOWER NEWTON ST AND FEDERAL ST INTERSECTION

EQUIPMENT ITEM 678.15	QUANTITY
TRAFFIC SIGNAL CONTROLLER ECONOLITE MODEL ASC/3 (TS2, TYPE 2) OR APPROVED EQUAL	1
P44 BASE MOUNTED CONTROLLER CABINET WITH EXTENDED BASE ON A CONCRETE FOUNDATION PAINTED BLACK WITH ANCILLARY CONTROL EQUIPMENT	1
BLACK PAINTED STEEL MAST ARM SIGNAL POLE WITH 50 FOOT MAST ARM AND 8 FOOT LIGHTING BRACKET ARM (MAP-1)	1
BLACK PAINTED PEDESTAL POST (8-FOOT)	3
BLACK PAINTED PEDESTAL POST (10-FOOT)	1
ONE WAY, 3-SECTION, 12-INCH POLYCARBONATE MAST ARM MOUNTED LED TRAFFIC SIGNAL HEAD WITH TUNNEL VISORS AND LOUVERED BACKPLATES WITH ALL PIECES PAINTED BLACK	5
ONE WAY, 5-SECTION, 12-INCH POLYCARBONATE MAST ARM MOUNTED LED TRAFFIC SIGNAL HEAD WITH TUNNEL VISORS AND LOUVERED BACKPLATES WITH ALL PIECES PAINTED BLACK	1

EQUIPMENT ITEM 678.15	QUANTITY
ONE WAY, 4-SECTION, 12-INCH POLYCARBONATE MAST ARM MOUNTED LED TRAFFIC SIGNAL HEAD WITH TUNNEL VISORS AND LOUVERED BACKPLATES WITH ALL PIECES PAINTED BLACK	1
PEDESTAL MOUNTED 16-INCH LED COUNTDOWN PEDESTRIAN SIGNAL HEADS PAINTED BLACK	4
VTRANS SPEC ACCESSIBLE PEDESTRIAN PUSHBUTTONS WITH R10-3e TYPE SIGN ASSEMBLY	4
ASTRO-BRACKETS OR EQUAL	6
MATRIX RADAR SENSORS WITH SENSOR CABLES OR EQUAL	3
METER SOCKET DISCONNECT WITH BYPASS ON PEDESTAL	1
GPS UNIT	1

RADAR STOP BAR DETECTOR SCHEDULE

ITEM 678.15

DETECTORS					SETTINGS	
PLAN ID	STREET	DIRECTION	LANE	CALL Ø	TYPE	DETECTOR NUMBER
MR1	FEDERAL ST	NORTHBOUND	ALL APPROACHES	2	RADAR	1
MR2	LOWER NEWTON ST	WESTBOUND	ALL APPROACHES	3/5	RADAR	2
MR3	LOWER NEWTON ST	EASTBOUND	ALL APPROACHES	4	RADAR	3

ELECTRICAL CONDUIT SCHEDULE

ITEM 678.21

I.D.	STATION	TYPE
SI		SPARE SWEEP AT MAP-1

WIRED CONDUIT (PVC) AND
ELECTRICAL CONDUIT SLEEVE SCHEDULE

ITEM NUMBER	678.21	678.23		678.30	
FROM/TO	ELECTRICAL CONDUIT SPARE 2"	WIRED CONDUIT 2"	WIRED CONDUIT 3"	CONDUIT SLEEVE 8"	DESCRIPTION
POWER TO STANCHION	10	10			POWER (INCLUDES RISER)
STANCHION TO CABINET	10	10			POWER
CABINET TO POST #1	25		50		POST #1, POST#2, MAP-1, POST #4, POST #3 (3 RUNS)
POST #1 TO POST #2	60	120		45	POST#2, MAP-1(3 RUNS)
POST #2 TO MAP-1	80	160			MAP-1(3 RUNS)
POST #1 TO POST #4	90	90			POST #4, POST #3 (2 RUNS)
POST #4 TO POST #3	55	55		42	POST #3 (2 RUNS)
SUB-TOTALS	330	445	50	87	
ROUNDING	5	5	0	3	
TOTALS	335	450	50	90	

2016 DHV WEEKDAY TRAFFIC DATA

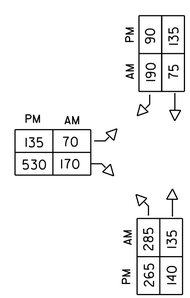

SIGNAL FACE ARRANGEMENT

(12" LED LENSES W/ 5" BACKPLATES) (16" LED)

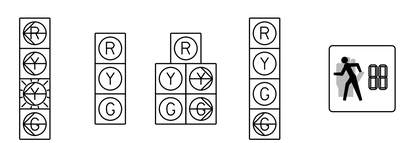

FACE 3 | FACE 4,8 | FACE 2A | FACE 2 | PED FACE P

EQUIPMENT NOTES

(A) SEE STANDARDS E-170, 171A, 171B, 171C, 173, & 175 FOR ADDITIONAL INFORMATION.

(B) SEE TRAFFIC SIGNAL NOTE SHEETS 110,111,AND 119 AND SINGLE MAST ARM CANTILEVER/FOOTING DETAIL SHEET 120 FOR ADDITIONAL INFORMATION.

(C) FOR SIGN DETAILS, SEE SHEETS 94-109.

LEGEND

NEW	LEGEND
CC	CONTROLLER CABINET
	SIGNAL HEAD
	CONDUIT
	PEDESTAL POST
	STANCHION
	MAST ARM
	PEDESTRIAN PUSH BUTTON
PB	PULL BOX
	OVERHEAD SIGN
	LUMINAIRE
MR#	MATRIX RADAR SENSOR
	MATRIX RADAR DETECTION ZONE

0 20 40
SCALE IN FEET

vhb

PROJECT NAME: ST. ALBANS
PROJECT NUMBER: HPP 8000(17 101/100

FILE NAME: 57414_TSPS3.dgn
PROJECT LEADER: M.A. COLGAN
DESIGNED BY: M. GRAHAM
TRAFFIC SIGNAL SHEET (1 OF 3)

PLOT DATE: 3/4/2016
DRAWN BY: J. ROBERT
CHECKED BY: C. BOBAY
SHEET 118 OF 230

TRAFFIC SIGNAL NOTES

ALL SIGNAL HEADS MOUNTED ON CANTILEVER ARMS SHALL BE POLYCARBONATE. BACKPLATES SHALL BE REQUIRED ON ALL SIGNAL HEADS.

A. NEW EQUIPMENT

1. THE TRAFFIC SIGNAL CONTROLLER AND ANCILLARY EQUIPMENT SHALL BE MANUFACTURED BY ECONOLITE CONTROL PRODUCTS, INC. OR NAZTEC, INC. OR APPROVED EQUIVALENT. TRAFFIC SIGNAL CONTROLLER SHALL BE NEMA TS2, TYPE 2, PROVIDED IN A NEMA "P" TYPE GROUND MOUNTED CABINET WITH BASE EXTENSION INSTALLED AS SHOWN ON THE TRAFFIC SIGNAL PLAN.
2. A DISCONNECT BREAKER FOR EACH CIRCUIT SHALL BE INSTALLED IN A RAINPROOF (NEMA 3R), LOCKED CABINET ON A STANCHION NEXT TO OR BELOW THE METER SOCKET. RECOMMEND OPTION #2 ON STD E-175.
3. ALL SIGNAL HEADS SHALL BE 12-INCH LIGHT EMITTING DIODES (LED).

   LUMINAIRE ON MAST ARM SHALL BE AN L.E.D. FIXTURE.
4. ALL SIGNAL EQUIPMENT SHALL BE PAINTED FLAT BLACK INCLUDING MAST ARM POLES, MAST ARMS, AND LUMINAIRE BRACKET ARMS.
5. GPS UNIT SHALL BE INSTALLED AND CONNECTED TO THE CONTROLLER TO MAINTAIN TIME BASED COORDINATION BETWEEN THIS
6. INTERSECTION AND THE MAIN ST WITH UPPER/LOWER NEWTON ST INTERSECTION

UPON STARTUP THE SIGNAL TIMINGS SHOWN ON THE PLANS MAY REQUIRE FINE-TUNING IN THE FIELD BASED ON TRAFFIC OBSERVATION.

B. SIGNAL OPERATION

1. THE TRAFFIC SIGNALS SHALL NOT BE OPERATED BEFORE PAVEMENT MARKINGS AND SIGNAL RELATED SIGNING IS IN PLACE.
2. ALL SIGNALS SHALL DWELL ON THE LOWER WELDON ST. THRU MOVEMENT PHASES (4+8).
3. LOWER WELDON ST THRU PHASES 4+8 SHALL BE USED FOR THE START-UP PHASE FOLLOWING FLASHING OPERATION.
4. THE WESTBOUND LEFT TURN SHALL OPERATE WITH PROTECTED-PERMISSIVE FLASHING YELLOW ARROW PHASING.
5. FLASHING YELLOW ARROW SHALL NOT BE DISPLAYED WHEN OPERATING IN PROTECTED ONLY MODE.
6. ALL TRAFFIC SIGNAL CONDUIT SHALL BE PVC, SCHEDULE 80

C. TRAFFIC SIGNAL CONDUIT

1. MINIMUM CONDUIT SIZES SHALL BE 2-INCH FOR ALL APPLICATIONS
2. WHEN NEW CONDUIT IS PLACED BELOW THE ROADWAY OR ACROSS SIDE ROADS, IT SHALL BE PLACED IN AN PVC ELECTRICAL CONDUIT SLEEVE, SIZE AS SHOWN ON THE PLANS (8" MINIMUM OR MATCHING EXISTING SLEEVE SIZE).
3. WHERE PLANS INDICATE 2 CONDUIT RUNS, 1 SHALL BE FOR THE SIGNAL CABLE AND 1 SHALL BE A SPARE CONDUIT. WHERE PLANS INDICATE 3 CONDUIT RUNS, 1 SHALL BE FOR THE SIGNAL CABLE, 1 SHALL BE FOR THE RADAR DETECTION, AND 1 SHALL BE A SPARE
4. CONDUIT.

What does this mean?

D. VEHICLE DETECTION

1. WAVETRONIX MATRIX RADAR SENSORS SHALL BE INSTALLED ON SIGNAL POLE UPRIGHT (MR2 AND MR3) BELOW THE MASTARM AND AIMED TO PICK UP VEHICLE DETECTION. MR1 SENSOR SHALL BE INSTALLED ON THE MAST ARM AND AIMED TO PICK UP VEHICLE DETECTION.
2. ANY CABLE FOR THE RADAR STOP BAR DETECTION SHALL BE INCIDENTAL TO ITEM 678.15.
3. ALL DETECTORS SHALL FAIL IN THE "ON" MODE.

E. GENERAL

1. THE CONTRACTOR SHALL ACQUIRE ALL NECESSARY PERMITS AND MAKE ALL NECESSARY ARRANGEMENTS WITH THE UTILITY COMPANY TO MAINTAIN THE EXISTING POWER SUPPLY TO THE SIGNAL EQUIPMENT.
2. SEE SUPPLEMENTAL SPECIFICATIONS FOR SECTIONS 678, 679, 752 & 753 FOR ADDITIONAL INFORMATION.

TIMING AND PHASING

		PHASE 2 (DWELL)												PHASE 9												PHASE 3+8												PHASE 4+8												
		R/W	CLEAR TO											R/W	CLEAR TO											R/W	CLEAR TO											R/W	CLEAR TO											
			Ø 9					Ø 3+8				Ø 4+8			Ø 3+8			Ø 4+8			Ø 2					Ø 4+8			Ø 2			Ø 9					Ø 2			Ø 9			Ø 3+8				
OFF PEAK REST OF DAY	VEHICLE	3																								3												3												
	MINIMUM	10	4	2				4	2			4	2													5	4	2		4	2			4	2			5	4	2		4	2			4	2		
	MAXIMUM	35	4	2				4	2			4	2													25	4	2		4	2			4	2			25	4	2		4	2			4	2		
	MAXIMUM2																																																
	MAXIMUM3																																																
	PED ACT													7	10	3	1		3	1			3	1																										
AM PEAK 6-8 AM	VEHICLE	3																								3												3												
	MINIMUM	10	4	2				4	2			4	2													5	4	2		4	2			4	2			5	4	2		4	2			4	2		
	MAXIMUM	30	4	2				4	2			4	2													30	4	2		4	2			4	2			30	4	2		4	2			4	2		
	MAXIMUM2																																																
	MAXIMUM3																																																
	PED ACT													7	10	3	1		3	1			3	1																										
PM PEAK 2-6 PM	VEHICLE	3																								3												3												
	MINIMUM	10	4	2				4	2			4	2													5	4	2		4	2			4	2			5	4	2		4	2			4	2		
	MAXIMUM	45	4	2				4	2			4	2													20	4	2		4	2			4	2			20	4	2		4	2			4	2		
	MAXIMUM2																																																
	MAXIMUM3																																																
	PED ACT													7	10	3	1		3	1			3	1																										
	FACE 2	G/G	Y		R			Y		R			Y	R	R	R	R		R	R			R	R		R	R	R		R	R			R	R		R	R	R	R		R	R			R	R		R	FY
	FACE 2A	G/G	Y/Y		R			Y/G		R/G			Y/Y	R	R	R	R		R	R			R	R		R	G/G	Y/Y	R		Y/Y	R		Y/Y	R		R	R	R	R		R	R			R	R		R	FY
	FACE 3	R	R	R				R		R			R	R	R	R	R		R	R			R	R		R	G	Y	FY		Y	R		Y	R		R	FY	Y	R		Y	R			G	Y		R	FR
	FACE 4	R	R	R				R		R			R	R	R	R	R		R	R			R	R		R	R	R		R	R			R	R		R	G	Y	R		Y	R			Y	R		R	FR
	FACE 8	R	R	R				R		R			R	R	R	R	R		R	R			R	R		R	G	G	G		Y	R			Y	R		G	Y	R		Y	R			G	G		R	FR
	PED	DW	DW	DW				DW		DW			DW	DW	W	FD	DW		DW	DW			DW	DW		DW	DW	DW			DW	DW			DW	DW		DW	DW	DW			DW	DW			DW	DW		DW	B

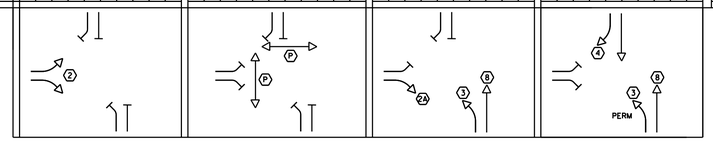

W = WALK, FD = FLASHING DON'T WALK, DW = DON'T WALK, B = BLANK, FR = FLASHING RED, FY = FLASHING YELLOW, SY = STEADY YELLOW

1. FACE NUMBERS ARE BASED ON NEMA PHASES
2. WESTBOUND LEFT-TURNS SHALL OPERATE UNDER PROTECTED/PERMISSIVE LEFT-TURN PHASING, USING THE 4-SECTION FLASHING YELLOW ARROW.

CONTROLLER IDENTIFICATION PLAQUE
NOT TO SCALE

LEGEND: - BLACK (NON-REFL.) - STAMPED PRIOR TO PAINTING
BACKGROUND: NATURAL ALUMINUM OR BRASS SURFACE

NOTES:

1.) THE PLAQUE SHALL BE MOUNTED ON THE TRAFFIC SIGNAL CONTROLLER CABINET. IT SHALL BE FASTENED TO THE CONTROLLER CABINET IN SUCH A MANNER AS TO BE NOT EASILY REMOVED, SUCH AS WELDED, RIVETED OR BOLTED WITH VANDAL PROOF BOLTS.
2.) THE LETTERS SHALL BE PUNCHED OR STAMPED, SUCH STAMPING SHALL PENETRATE AT LEAST ½ THE BASE MATERIAL THICKNESS.
3.) THE BASE MATERIAL FOR THE PLAQUE SHALL BE BRASS OR ALUMINUM WITH A MINIMUM THICKNESS OF 0.100 INCHES.

PROGRAM PERIODS OF OPERATION

	1 AM	2	3	4	5	6	7	8	9	10	11	12 PM	1	2	3	4	5	6	7	8	9	10	11	12 AM
SUNDAY	1																							
MONDAY	1						2						1						3					1
TUESDAY	1						2						1						3					1
WEDNESDAY	1						2						1						3					1
THURSDAY	1						2						1						3					1
FRIDAY	1						2						1						3					1
SATURDAY	1																							

NOTES:

PLAN 1 - OFFPEAK (MAXIMUM 1): MIDNIGHT TO 6:00 AM, M-F
8:00 AM TO 2:00 PM, M-F
6:00 PM TO MIDNIGHT, M-F
ALL DAY SATURDAY AND SUNDAY

PLAN 2 - AM PEAK (MAXIMUM 2): 6:00 AM TO 8:00 AM, M-F

PLAN 3 - PM PEAK (MAXIMUM 3): 2:00 PM TO 6:00 PM, M-F

PROJECT NAME: ST. ALBANS	
PROJECT NUMBER: HPP 8000(17 101/100	
FILE NAME: 57414_TSPS3A.dgn	PLOT DATE: 3/4/2016
PROJECT LEADER: M.A. COLGAN	DRAWN BY: J. ROBERT
DESIGNED BY: M. GRAHAM	CHECKED BY: C. BOBAY
TRAFFIC SIGNAL SHEET (2 OF 3)	SHEET 119 OF 230

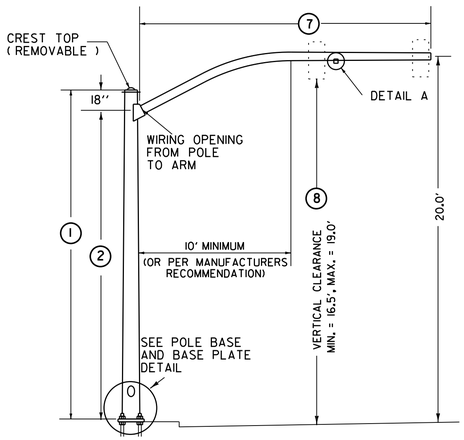

TYPE AI

(SPECIAL CURVED MAST ARM)

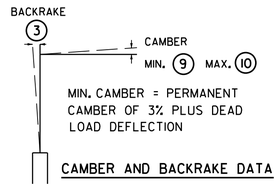

MIN. CAMBER = PERMANENT
CAMBER OF 3% PLUS DEAD
LOAD DEFLECTION

CAMBER AND BACKRAKE DATA

POLE BASE DIAMETER 4

POLE GAUGE 5

POLE TAPER RATE 6

ARM DIAMETER 11

ARM GAUGE 12

ARM TAPER RATE 13

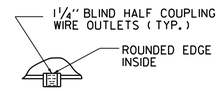

DETAIL A

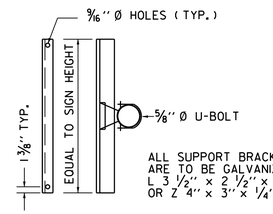

ALL SUPPORT BRACKETS
ARE TO BE GALVANIZED
L 3 1/2" x 2 1/2" x 5/16"
OR Z 4" x 3" x 1/4"

SIGN ON SINGLE
MAST ARM

SIGN BRACKET DETAILS

ANCHOR BOLT DETAIL		
SIZE	L(IN)	T(IN)
1- 1/4" X 48"	42	8
1- 1/2" X 60"	54	9
1- 3/4" X 90"	84	9
2" X 96"	96	9

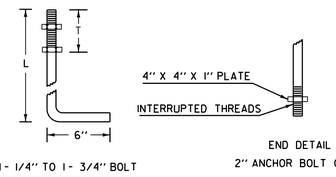

ANCHOR BOLT DETAIL

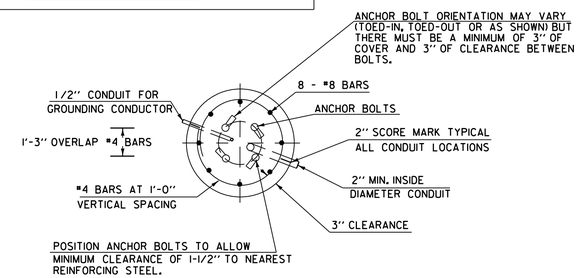

SECTION

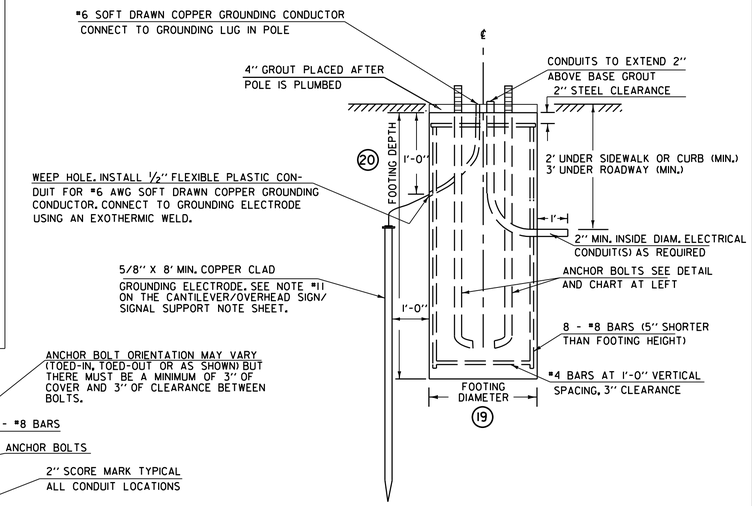

ELEVATION

CANTILEVER FOOTING DETAIL

(SPREAD FOOTINGS OR PILES ARE OPTIONAL)

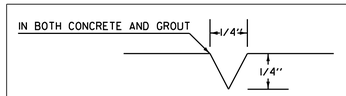

USED FOR CONDUIT LOCATION, SEE SECTION
DETAIL AT LEFT

2" SCORE MARK DETAIL

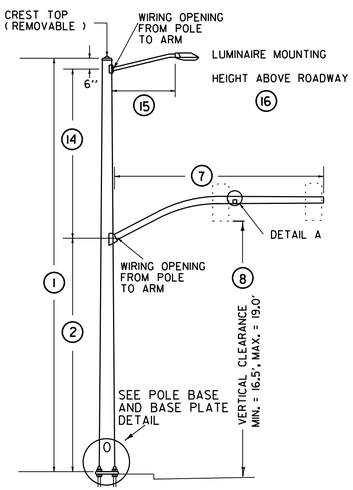

TYPE BI

(SPECIAL CURVED MAST ARM)

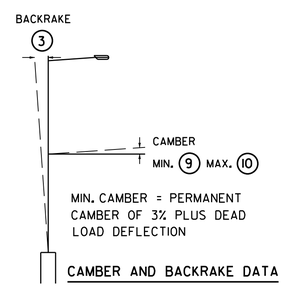

MIN. CAMBER = PERMANENT
CAMBER OF 3% PLUS DEAD
LOAD DEFLECTION

CAMBER AND BACKRAKE DATA

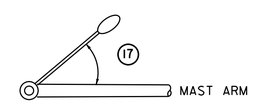

LUMINAIRE ORIENTATION

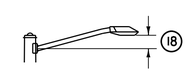

LUMINAIRE ARM RISE

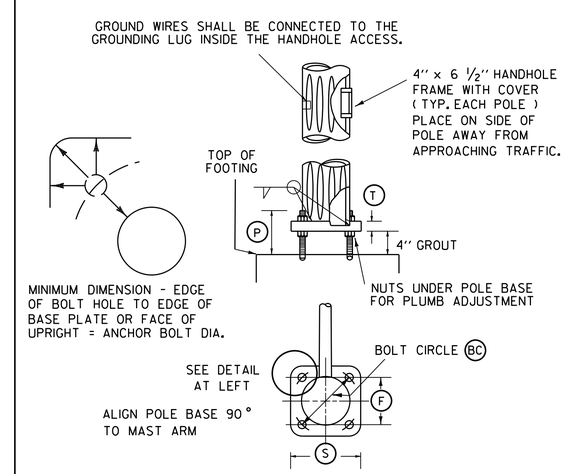

POLE BASE AND BASE PLATE DETAIL

STRUCTURE DIMENSIONS

		POLE DATA						ARM DATA							LIGHTING DATA					FOOTING DATA		BASE PLATE / BOLT DATA					
POLE	TYPE	1	2	3	4	5	6	7	8	9	10	11	12	13	14	15	16	17	18	19	20	BC	F	S	T	P	ANCHOR BOLT SIZE
MAP-1	BI	33	16					50	18						12.5	8		45	2								

NOTE:
DETAILS
NTS

SINGLE MAST ARM CANTILEVER / FOOTING DETAIL SHEET

PREPARED BY JAR DATE $$$DATE$$$
CHECKED BY CMB DATE $$$DATE$$$
DESIGN SUPERVISOR _____ DATE _____
PROJ. ST. ALBANS
HPP 8000(17 101/100
TRAFFIC SIGNAL SHEET NO. 3
SHEET 120 OF 230 SHEETS

VHB 57414.00

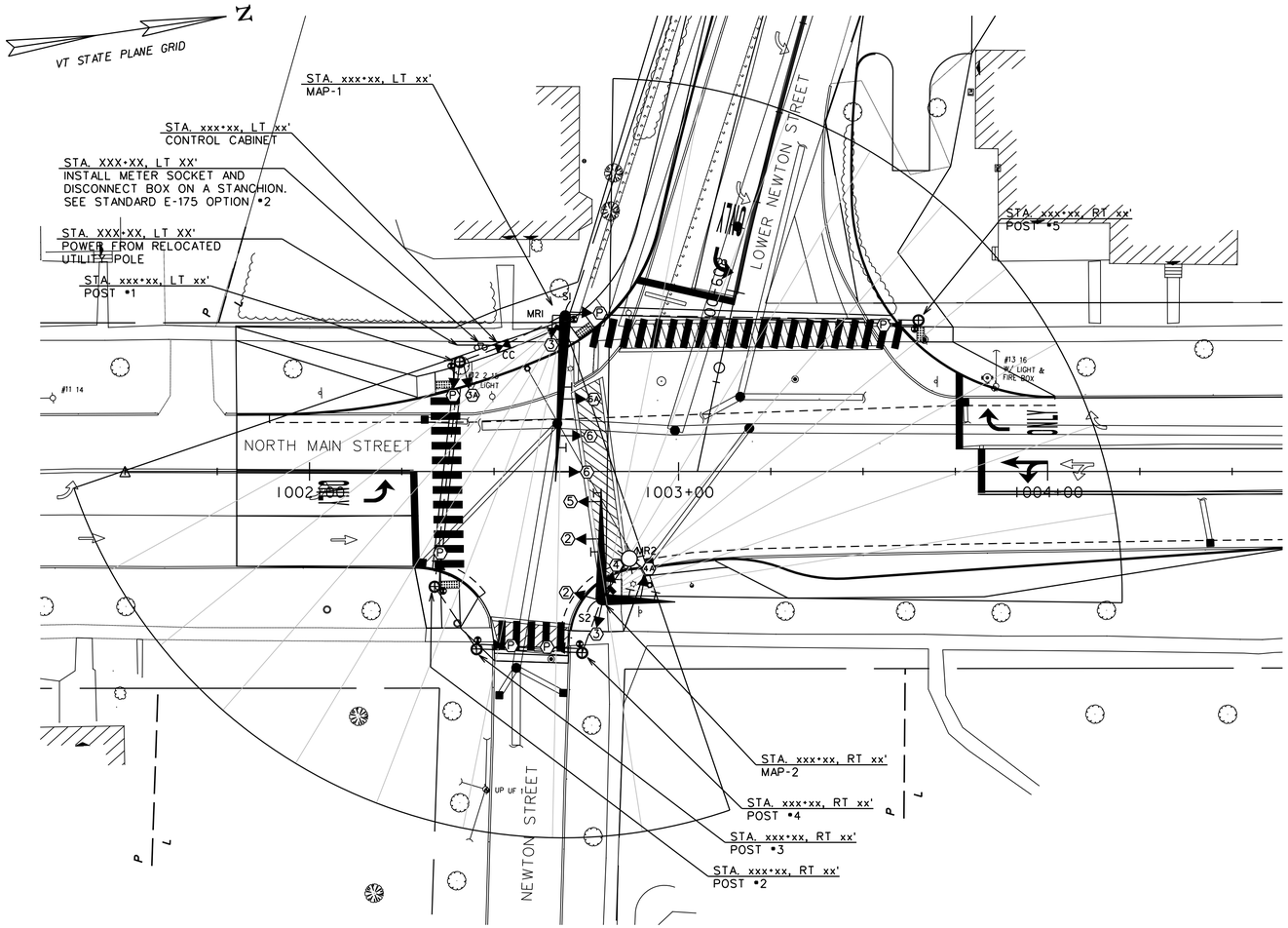

LIST OF MAJOR EQUIPMENT
NORTH MAIN ST AT UPPER / LOWER NEWTON ST INTERSECTION

EQUIPMENT ITEM 678.15	QUANTITY
TRAFFIC SIGNAL CONTROLLER ECONOLITE MODEL ASC/3 (TS2, TYPE 2) OR APPROVED EQUAL	1
P44 BASE MOUNTED CONTROLLER CABINET WITH EXTENDED BASE ON A CONCRETE FOUNDATION PAINTED BLACK WITH ANCILLARY CONTROL EQUIPMENT	1
BLACK PAINTED STEEL MAST ARM SIGNAL POLE WITH 45 FOOT MAST ARM (MAP-1)	1
BLACK PAINTED STEEL DOUBLE MAST ARM SIGNAL POLE WITH 20-FOOT AND 30-FOOT MAST ARM POLE AND 8 FOOT LIGHTING BRACKET ARM (MAP-2)	1
BLACK PAINTED PEDESTAL POST (8-FOOT)	5
ONE WAY, 3-SECTION, 12-INCH POLYCARBONATE MAST ARM MOUNTED LED TRAFFIC SIGNAL HEAD WITH TUNNEL VISORS AND LOUVERED BACKPLATES WITH ALL PIECES PAINTED BLACK	9
ONE WAY, 4-SECTION, 12-INCH POLYCARBONATE MAST ARM MOUNTED LED TRAFFIC SIGNAL HEAD WITH TUNNEL VISORS AND LOUVERED BACKPLATES WITH ALL PIECES PAINTED BLACK	2

EQUIPMENT ITEM 678.15	QUANTITY
PEDESTAL MOUNTED 16-INCH LED COUNTDOWN PEDESTRIAN SIGNAL HEADS PAINTED BLACK	5
BRACKET MOUNTED 16-INCH LED COUNTDOWN PEDESTRIAN SIGNAL HEADS PAINTED BLACK	1
VTRANS SPEC ACCESSIBLE PEDESTRIAN PUSHBUTTONS WITH R10-3e TYPE SIGN ASSEMBLY	6
ASTRO-BRACKETS OR EQUAL	9
MATRIX RADAR SENSORS WITH SENSOR CABLES OR EQUAL	2
METER SOCKET DISCONNECT WITH BYPASS ON PEDESTAL	1
GPS UNIT	1

RADAR STOP BAR DETECTOR SCHEDULE

ITEM 678.15

DETECTORS					SETTINGS	
PLAN ID	STREET	DIRECTION	LANE	CALL Ø	TYPE	DETECTOR NUMBER
MR1	NORTH MAIN ST	NORTHBOUND	ALL APPROACHES	2/5	RADAR	1
MR1	UPPER NEWTON ST	WESTBOUND	ALL APPROACHES	3	RADAR	2
MR2	NORTH MAIN ST	SOUTHBOUND	ALL APPROACHES	6	RADAR	3
MR2	LOWER NEWTON ST	EASTBOUND	ALL APPROACHES	4	RADAR	3

ELECTRICAL CONDUIT SCHEDULE

ITEM 678.21

I.D.	STATION	TYPE
S1		SPARE SWEEP AT MAP-1
S2		SPARE SWEEP AT MAP-2

WIRED CONDUIT (PVC) AND ELECTRICAL CONDUIT SLEEVE SCHEDULE

ITEM NUMBER	678.21	678.23		678.30	
FROM/TO	ELECTRICAL CONDUIT SPARE 2"	WIRED CONDUIT 2"	WIRED CONDUIT 3"	CONDUIT SLEEVE 8"	DESCRIPTION
POWER TO STANCHION	5	5			POWER (INCLUDES RISER)
STANCHION TO CABINET	5	5			POWER
CABINET TO MAP-1	20	40			MAP-1, POST #5 (3 RUNS)
MAP-1 TO POST #5	100	100		75	POST #5 (2 RUNS)
CABINET TO POST #1	10		20		POST #1, POST #2, POST #3, POST #4, MAP-2 (2 RUNS)
POST #1 TO POST #2	60	120		50	POST #2, POST #3, POST #4, MAP-2 (2 RUNS)
POST #2 TO POST #3	20	40			POST #3, POST #4, MAP-2 (2 RUNS)
POST #3 TO POST #4	30	60		20	POST #4, MAP-2 (2 RUNS)
POST #4 TO MAP-2	20	40			MAP-2 (2 RUNS)
SUB-TOTALS	270	430	20	145	
ROUNDING	5	5	5	5	
TOTALS	275	435	25	150	

2016 DHV WEEKDAY TRAFFIC DATA

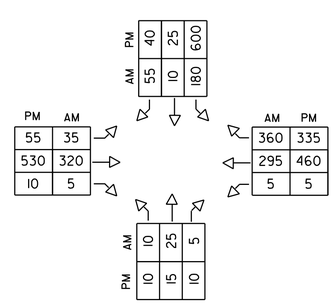

SIGNAL FACE ARRANGEMENT

(12" LED LENSES W/ 5" BACKPLATES) (16" LED)

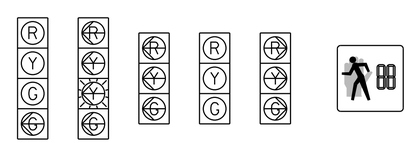

EQUIPMENT NOTES

(A) SEE STANDARDS E-170, 171A, 171B, 171C, 173, & 175 FOR ADDITIONAL INFORMATION.

(B) SEE TRAFFIC SIGNAL NOTE SHEETS 110,111, AND 122 AND SINGLE MAST ARM CANTILEVER/FOOTING DETAIL SHEET 123 AND DOUBLE MAST ARM CANTILEVER/FOOTING DETAIL SHEET 124 FOR ADDITIONAL INFORMATION.

(C) FOR SIGN DETAILS, SEE SHEETS 94-109.

LEGEND

NEW	LEGEND
CC	CONTROLLER CABINET
	SIGNAL HEAD
	CONDUIT
	PEDESTAL POST
	STANCHION
	MAST ARM
	PEDESTRIAN PUSH BUTTON
PB	PULL BOX
	OVERHEAD SIGN
	LUMINAIRE
MR	MATRIX RADAR SENSOR
	MATRIX RADAR DETECTION ZONE

0 20 40
SCALE IN FEET

vhb

PROJECT NAME: ST. ALBANS
PROJECT NUMBER: HPP 8000(17 101/100

FILE NAME: 57414_TSPS4.dgn
PROJECT LEADER: M.A. COLGAN
DESIGNED BY: M. GRAHAM
TRAFFIC SIGNAL SHEET (1 OF 4)

PLOT DATE: 3/4/2016
DRAWN BY: J. ROBERT
CHECKED BY: C. BOBAY
SHEET 121 OF 230

TRAFFIC SIGNAL NOTES

A. NEW EQUIPMENT

1. ALL SIGNAL HEADS MOUNTED ON CANTILEVER ARMS SHALL BE POLYCARBONATE. BACKPLATES SHALL BE REQUIRED ON ALL SIGNAL HEADS.

2. THE TRAFFIC SIGNAL CONTROLLER AND ANCILLARY EQUIPMENT SHALL BE MANUFACTURED BY ECONOLITE CONTROL PRODUCTS, INC. OR NAZTEC, INC. OR APPROVED EQUIVALENT. TRAFFIC SIGNAL CONTROLLER SHALL BE NEMA TS2, TYPE 2, PROVIDED IN A NEMA "P" TYPE GROUND MOUNTED CABINET WITH BASE EXTENSION INSTALLED AS SHOWN ON THE TRAFFIC SIGNAL PLAN.

3. A DISCONNECT BREAKER FOR EACH CIRCUIT SHALL BE INSTALLED IN A RAINPROOF (NEMA 3R), LOCKED CABINET ON A STANCHION NEXT TO OR BELOW THE METER SOCKET. RECOMMEND OPTION #2 ON STD E-175.

4. ALL SIGNAL HEADS SHALL BE 12-INCH LIGHT EMITTING DIODES (LED).

5. LUMINAIRE ON MAST ARM SHALL BE AN L.E.D. FIXTURE.

6. ALL SIGNAL EQUIPMENT SHALL BE PAINTED FLAT BLACK INCLUDING MAST ARM POLES, MAST ARMS, AND LUMINAIRE BRACKET ARMS.

7. GPS UNIT SHALL BE INSTALLED AND CONNECTED TO THE CONTROLLER TO MAINTAIN TIME BASED COORDINATION BETWEEN THIS INTERSECTION AND THE FEDERAL ST WITH LOWER NEWTON ST INTERSECTION.

B. SIGNAL OPERATION

1. UPON STARTUP THE SIGNAL TIMINGS SHOWN ON THE PLANS MAY REQUIRE FINE-TUNING IN THE FIELD BASED ON TRAFFIC OBSERVATION.

2. THE TRAFFIC SIGNALS SHALL NOT BE OPERATED BEFORE PAVEMENT MARKINGS AND SIGNAL RELATED SIGNING IS IN PLACE.

3. ALL SIGNALS SHALL DWELL ON THE US 7 THRU MOVEMENT PHASES (2+6).

4. US 7 THRU PHASES 2+6 SHALL BE USED FOR THE START-UP PHASE FOLLOWING FLASHING OPERATION.

5. THE NORTHBOUND LEFT TURN SHALL OPERATE WITH PROTECTED-PERMISSIVE FLASHING YELLOW ARROW PHASING.

6. FLASHING YELLOW ARROW SHALL NOT BE DISPLAYED WHEN OPERATING IN PROTECTED ONLY MODE.

7. THE SOUTHBOUND RIGHT TURN SHALL OPERATE AS AN OVERLAP TO PHASE 4

C. TRAFFIC SIGNAL CONDUIT

1. TRAFFIC SIGNAL CONDUIT SHALL BE PVC, SCHEDULE 80

2. MINIMUM CONDUIT SIZES SHALL BE 2-INCH FOR ALL APPLICATIONS

3. WHEN NEW CONDUIT IS PLACED BELOW THE ROADWAY OR ACROSS SIDE ROADS, IT SHALL BE PLACED IN AN PVC ELECTRICAL CONDUIT SLEEVE, SIZE AS SHOWN ON THE PLANS (8" MINIMUM OR MATCHING EXISTING SLEEVE SIZE).

4. WHERE PLANS INDICATE 2 CONDUIT RUNS, 1 SHALL BE FOR THE SIGNAL CABLE AND 1 SHALL BE A SPARE CONDUIT. WHERE PLANS INDICATE 3 CONDUIT RUNS, 1 SHALL BE FOR THE SIGNAL CABLE, 1 SHALL BE FOR THE RADAR DETECTION, AND 1 SHALL BE A SPARE CONDUIT.

D. VEHICLE DETECTION

1. WAVETRONIX MATRIX RADAR SENSORS SHALL BE INSTALLED ON THE SIGNAL POLE UPRIGHT BELOW THE MASTARM AND AIMED TO PICK UP VEHICLE DETECTION.

2. ANY CABLE FOR THE RADAR STOP BAR DETECTION SHALL BE INCIDENTAL TO ITEM 678.15.

3. ALL DETECTORS SHALL FAIL IN THE "ON" MODE.

E. GENERAL

1. THE CONTRACTOR SHALL ACQUIRE ALL NECESSARY PERMITS AND MAKE ALL NECESSARY ARRANGEMENTS WITH THE UTILITY COMPANY TO MAINTAIN THE EXISTING POWER SUPPLY TO THE SIGNAL EQUIPMENT.

2. SEE SUPPLEMENTAL SPECIFICATIONS FOR SECTIONS 678, 679, 752 & 753 FOR ADDITIONAL INFORMATION.

3. SEE THE CONTROLLER ID PLAQUE DETAIL ON THIS SHEET.

TIMING AND PHASING

		PHASE 2+5								PHASE 2+6 (DWELL)								PHASE 9								PHASE 3								PHASE 4								
		R/W	CLEAR TO							R/W	CLEAR TO							R/W	CLEAR TO							R/W	CLEAR TO							R/W	CLEAR TO							FLASHING OPERATION
			Ø 2+6		Ø 9		Ø 3		Ø 4		Ø 9		Ø 3		Ø 4		Ø 2+5		Ø 3		Ø 4		Ø 2+5		Ø 2+6		Ø 4		Ø 2+5		Ø 2+6		Ø 9		Ø 2+5		Ø 2+6		Ø 9		Ø 3		
OFF PEAK REST OF DAY	VEHICLE	3								3																3								3								
	MINIMUM	5	4	2		4	2		4	2		4	2		4	2		10	4	2		4	2		4	2		5	4	2		4	2		4	2		4	2		5	4	2		4	2		4	2
	MAXIMUM	10	4	2		4	2		4	2		4	2		4	2		30	4	2		4	2		4	2		10	4	2		4	2		4	2		4	2		25	4	2		4	2		4	2
	MAXIMUM2																																														
	MAXIMUM3																																														
	PED ACT																	7	21	3	1		3	1		3	1																			
AM PEAK 6-8 AM	VEHICLE	3								3																3								3								
	MINIMUM	5	4	2		4	2		4	2		4	2		4	2		10	4	2		4	2		4	2		5	4	2		4	2		4	2		4	2		5	4	2		4	2		4	2
	MAXIMUM	10	4	2		4	2		4	2		4	2		4	2		35	4	2		4	2		4	2		10	4	2		4	2		4	2		4	2		30	4	2		4	2		4	2
	MAXIMUM2																																														
	MAXIMUM3																																														
	PED ACT																	7	21	3	1		3	1		3	1																			
PM PEAK 2-6 PM	VEHICLE	3								3																3								3								
	MINIMUM	5	4	2		4	2		4	2		4	2		4	2		10	4	2		4	2		4	2		5	4	2		4	2		4	2		4	2		5	4	2		4	2		4	2
	MAXIMUM	10	4	2		4	2		4	2		4	2		4	2		30	4	2		4	2		4	2		10	4	2		4	2		4	2		4	2		20	4	2		4	2		4	2
	MAXIMUM2																																														
	MAXIMUM3																																														
	PED ACT																	7	21	3	1		3	1		3	1																			
	FACE 2	G	G	G		Y	R		Y	R		Y	R		Y	R		G	Y	R		Y	R		Y	R		R	R	R		R	R		R	R		R	R		R	R	R		R	R		R	R	FY
	FACE 3	R	R	R		R	R		R	R		R	R		R	R		R	R	R		R	R		R	R		R	R	R		R	R		R	R		R	R		G	Y	R		Y	R		Y	R	FR
	FACE 3A	~~R~~	~~R~~	~~R~~		~~R~~	~~R~~		~~R~~	~~R~~		~~R~~	~~R~~		~~R~~	~~R~~		~~R~~	~~R~~	~~R~~		~~R~~	~~R~~		~~R~~	~~R~~		~~R~~	~~R~~	~~R~~		~~R~~	~~R~~		~~R~~	~~R~~		~~R~~	~~R~~		~~G~~	~~Y~~	~~R~~		~~Y~~	~~R~~		~~Y~~	~~R~~	FR
	FACE 4	R	R	R		R	R		R	R		R	R		R	R		R	R	R		R	R		R	R		R	R	R		R	R		R	R		R	R		R	R	R		R	R		R	R	FR
	FACE 4A	R	R	R		R	R		R	R		R	R		R	R		R	R	R		R	R		R	R		R	R	R		R	R		R	R		R	R		G	Y	R		Y	R		Y	R	FR
	FACE 5	~~G~~	~~FY~~	~~FY~~		~~Y~~	~~R~~		~~Y~~	~~R~~		~~Y~~	~~R~~		~~Y~~	~~R~~		~~FY~~	~~Y~~	~~R~~		~~Y~~	~~R~~		~~Y~~	~~R~~		~~R~~	~~R~~	~~R~~		~~R~~	~~R~~		~~R~~	~~R~~		~~R~~	~~R~~		~~R~~	~~R~~	~~R~~		~~R~~	~~R~~		~~R~~	~~R~~	FR
	FACE 6	R	R	R		R	R		R	R		R	R		R	R		G	Y	R		Y	R		Y	R		R	R	R		R	R		R	R		R	R		R	R	R		R	R		R	R	FY
	FACE 6A	~~R~~	~~R~~	~~R~~		~~R~~	~~R~~		~~R~~	~~R~~		~~R~~	~~R~~		~~G~~	~~G~~		~~G~~	~~Y~~	~~R~~		~~Y~~	~~R~~		~~Y~~	~~R~~		~~R~~	~~R~~	~~R~~		~~R~~	~~R~~		~~R~~	~~R~~		~~R~~	~~R~~		~~G~~	~~Y~~	~~R~~		~~Y~~	~~R~~		~~Y~~	~~R~~	FY
	PED	DW	DW	DW		DW	DW		DW	DW		DW	DW		DW	DW		DW	DW	DW		DW	DW		DW	DW		W	FD	DW		DW	DW		DW	DW		DW	DW		DW	DW	DW		DW	DW		DW	DW	B

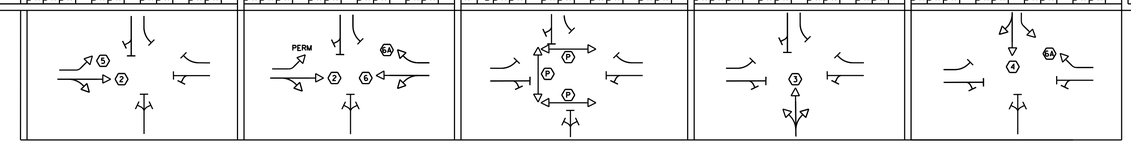

W = WALK, FD = FLASHING DON'T WALK, DW = DON'T WALK, B = BLANK, FR = FLASHING RED, FY = FLASHING YELLOW, SY = STEADY YELLOW

1. FACE NUMBERS ARE BASED ON NEMA PHASES

2. NORTHBOUND LEFT-TURNS SHALL OPERATE UNDER PROTECTED/PERMISSIVE LEFT-TURN PHASING, USING THE 4-SECTION FLASHING YELLOW ARROW.

3. SOUTHBOUND RIGHT TURNS SHALL OVERLAP LOWER NEWTON ST LEFT TURNS DURING PHASE 4.

CONTROLLER IDENTIFICATION PLAQUE
NOT TO SCALE

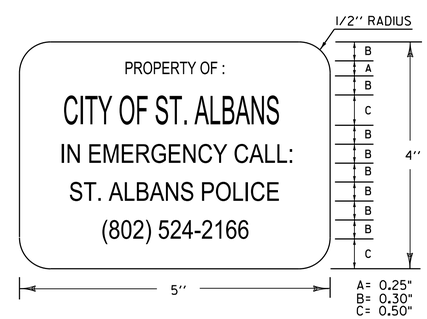

LEGEND: - BLACK (NON-REFL.) - STAMPED PRIOR TO PAINTING
BACKGROUND: NATURAL ALUMINUM OR BRASS SURFACE

NOTES:

1.) THE PLAQUE SHALL BE MOUNTED ON THE TRAFFIC SIGNAL CONTROLLER CABINET. IT SHALL BE FASTENED TO THE CONTROLLER CABINET IN SUCH A MANNER AS TO BE NOT EASILY REMOVED, SUCH AS WELDED, RIVETED OR BOLTED WITH VANDAL PROOF BOLTS.

2.) THE LETTERS SHALL BE PUNCHED OR STAMPED, SUCH STAMPING SHALL PENETRATE AT LEAST ½ THE BASE MATERIAL THICKNESS.

3.) THE BASE MATERIAL FOR THE PLAQUE SHALL BE BRASS OR ALUMINUM WITH A MINIMUM THICKNESS OF 0.100 INCHES.

PROGRAM PERIODS OF OPERATION

	1 2 3 4 5 6 7 8 9 10 11 12 1 2 3 4 5 6 7 8 9 10 11 12 (AM / PM / AM)				
SUNDAY	1				
MONDAY	1	2	1	3	1
TUESDAY	1	2	1	3	1
WEDNESDAY	1	2	1	3	1
THURSDAY	1	2	1	3	1
FRIDAY	1	2	1	3	1
SATURDAY	1				

NOTES:

PLAN 1 - OFFPEAK (MAXIMUM 1): MIDNIGHT TO 6:00 AM, M-F
8:00 AM TO 2:00 PM, M-F
6:00 PM TO MIDNIGHT, M-F
ALL DAY SATURDAY AND SUNDAY

PLAN 2 - AM PEAK (MAXIMUM 2): 6:00 AM TO 8:00 AM, M-F

PLAN 3 - PM PEAK (MAXIMUM 3): 2:00 PM TO 6:00 PM, M-F

PROJECT NAME: ST. ALBANS
PROJECT NUMBER: HPP 8000(17)

FILE NAME: 57414_TSPS4A.dgn
PROJECT LEADER: M.A. COLGAN
DESIGNED BY: M. GRAHAM
TRAFFIC SIGNAL SHEET (2 OF 4)

PLOT DATE: 3/4/2016
DRAWN BY: J. ROBERT
CHECKED BY: C. BOBAY
SHEET 122 OF 230

VHB 57414.00

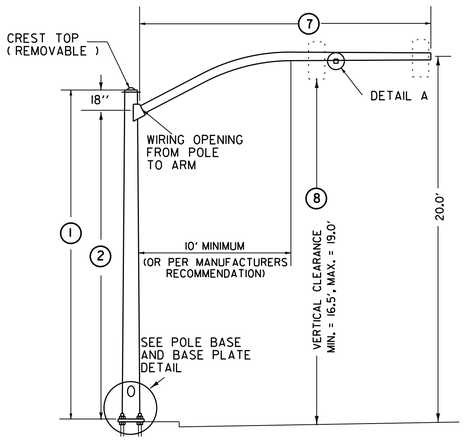

TYPE AI

(SPECIAL CURVED MAST ARM)

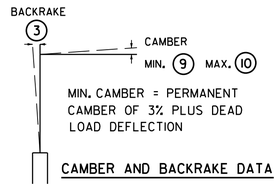

MIN. CAMBER = PERMANENT
CAMBER OF 3% PLUS DEAD
LOAD DEFLECTION

CAMBER AND BACKRAKE DATA

POLE BASE DIAMETER 4

POLE GAUGE 5

POLE TAPER RATE 6

ARM DIAMETER 11

ARM GAUGE 12

ARM TAPER RATE 13

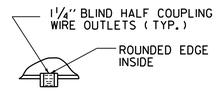

DETAIL A

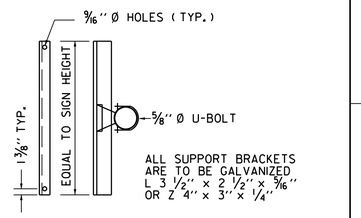

ALL SUPPORT BRACKETS
ARE TO BE GALVANIZED
L 3 1/2" x 2 1/2" x 5/16"
OR Z 4" x 3" x 1/4"

SIGN ON SINGLE
MAST ARM

SIGN BRACKET DETAILS

ANCHOR BOLT DETAIL		
SIZE	L(IN)	T(IN)
1- 1/4" X 48"	42	8
1- 1/2" X 60"	54	9
1- 3/4" X 90"	84	9
2" X 96"	96	9

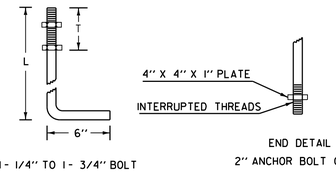

ANCHOR BOLT DETAIL

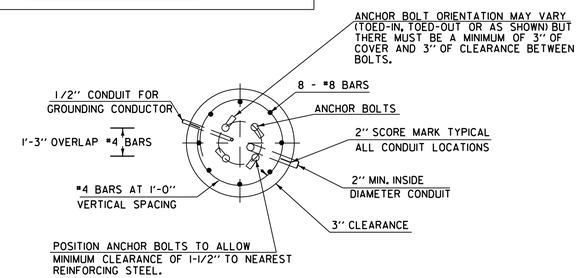

SECTION

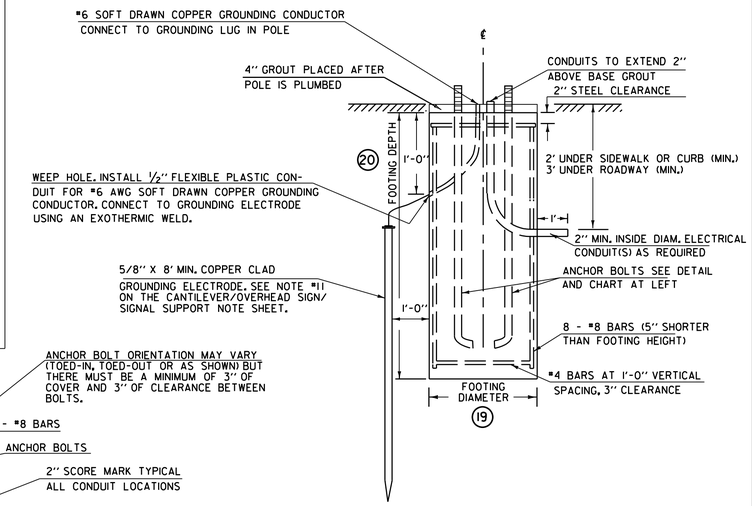

ELEVATION

CANTILEVER FOOTING DETAIL

(SPREAD FOOTINGS OR PILES ARE OPTIONAL)

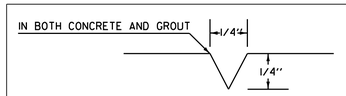

USED FOR CONDUIT LOCATION, SEE SECTION
DETAIL AT LEFT

2" SCORE MARK DETAIL

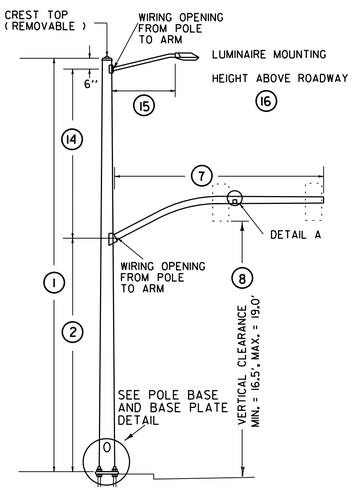

TYPE BI

(SPECIAL CURVED MAST ARM)

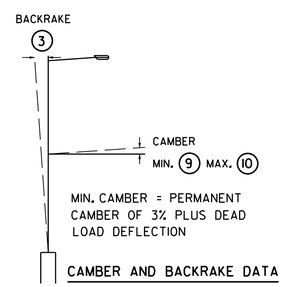

MIN. CAMBER = PERMANENT
CAMBER OF 3% PLUS DEAD
LOAD DEFLECTION

CAMBER AND BACKRAKE DATA

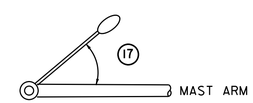

LUMINAIRE ORIENTATION

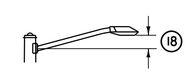

LUMINAIRE ARM RISE

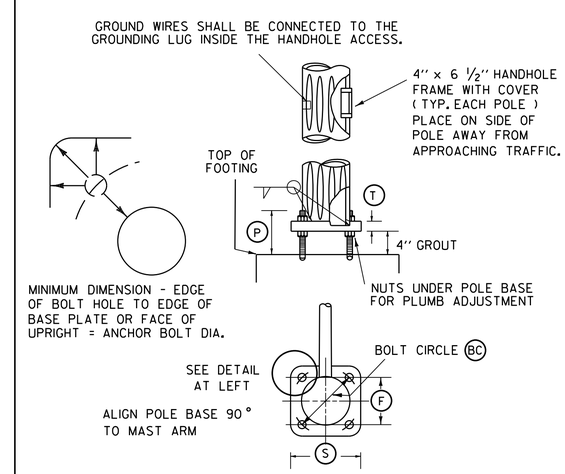

POLE BASE AND BASE PLATE DETAIL

STRUCTURE DIMENSIONS

		POLE DATA						ARM DATA							LIGHTING DATA					FOOTING DATA		BASE PLATE / BOLT DATA					
POLE	TYPE	1	2	3	4	5	6	7	8	9	10	11	12	13	14	15	16	17	18	19	20	BC	F	S	T	P	ANCHOR BOLT SIZE
MAP-1	AI	21.5	16					45	18																		

NOTE:
DETAILS
NTS

SINGLE MAST ARM CANTILEVER / FOOTING DETAIL SHEET

PREPARED BY JAR DATE $$$DATE$$$
CHECKED BY CMB DATE $$$DATE$$$
DESIGN SUPERVISOR _____ DATE _____
PROJ. ST. ALBANS
HPP 8000(17 101/100
TRAFFIC SIGNAL SHEET NO. 3
SHEET 123 OF 230 SHEETS

VHB 57414.00

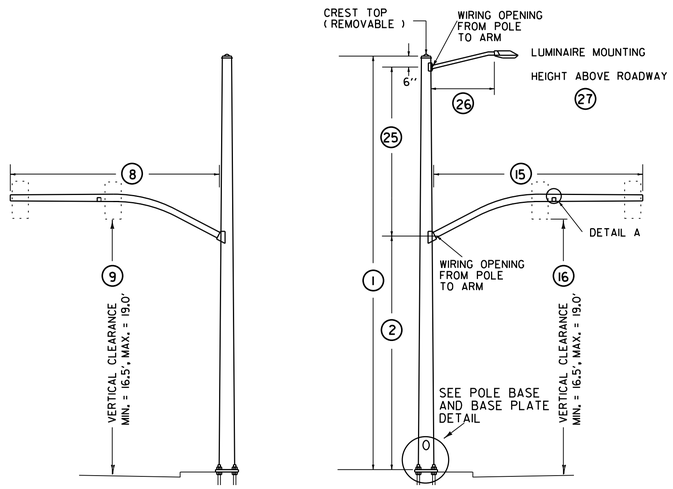

POLE BASE DIAMETER (3)
POLE GAUGE (4)
POLE TAPER RATE (5)

ARM A DIAMETER (10)
ARM A GAUGE (11)
ARM A TAPER RATE (12)

ARM B DIAMETER (17)
ARM B GAUGE (18)
ARM B TAPER RATE (19)

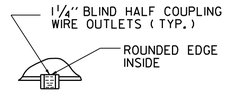

DETAIL A

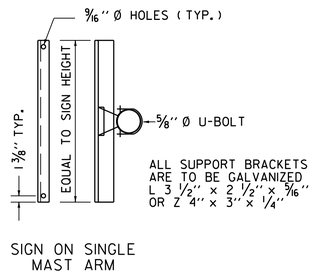

SIGN BRACKET DETAILS

ANCHOR BOLT DETAIL		
SIZE	L (IN)	T (IN)
1 - 1/4" X 48"	42	8
1 - 1/2" X 60"	54	9
1 - 3/4" X 90"	84	9
2" X 96"	96	9

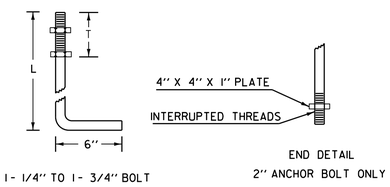

ANCHOR BOLT DETAIL

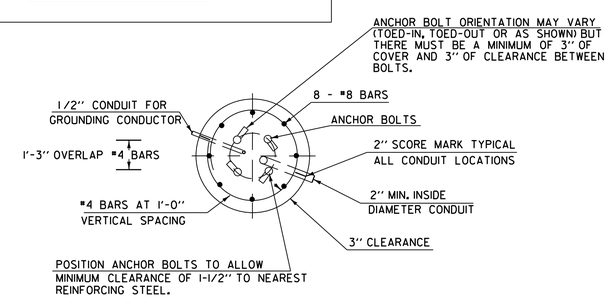

SECTION

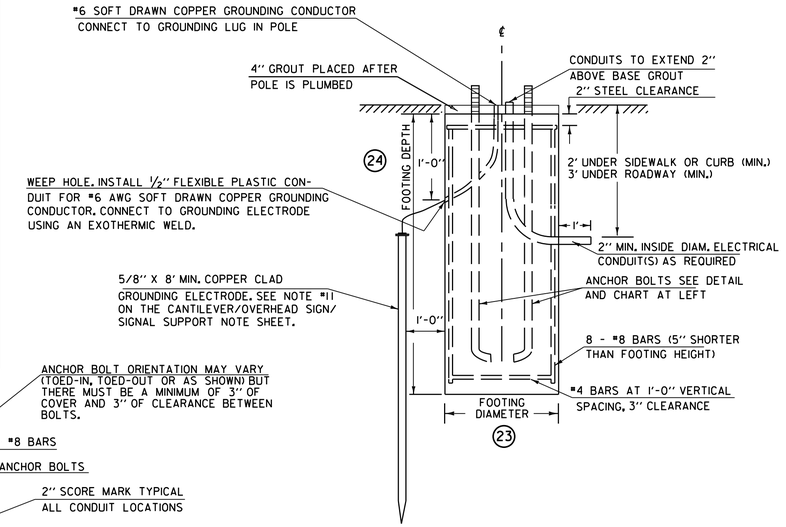

ELEVATION

CANTILEVER FOOTING DETAIL

(SPREAD FOOTINGS OR PILES ARE OPTIONAL)

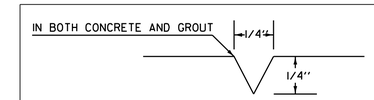

USED FOR CONDUIT LOCATION, SEE SECTION DETAIL AT LEFT

2" SCORE MARK DETAIL

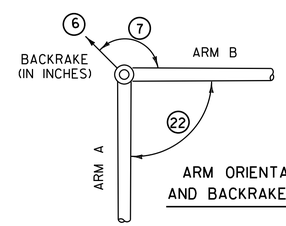

ARM ORIENTATION
AND BACKRAKE DATA

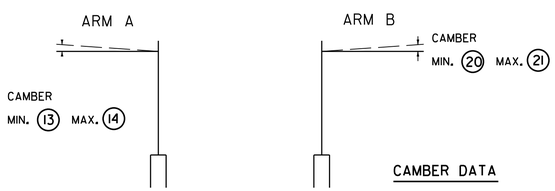

CAMBER DATA

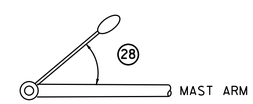

LUMINAIRE ORIENTATION

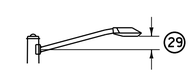

LUMINAIRE ARM RISE

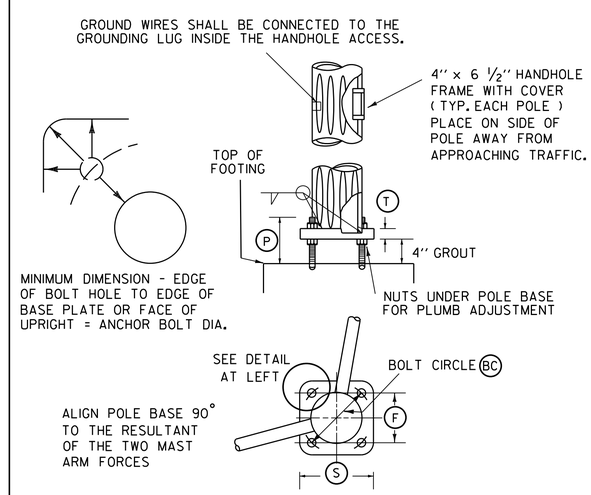

POLE BASE AND BASE PLATE DETAIL

STRUCTURE DIMENSIONS

POLE DATA									ARM DATA															FOOTING DATA		LIGHTING DATA					BASE PLATE / BOLT DATA					
POLE	TYPE	1	2	3	4	5	6	7	8	9	10	11	12	13	14	15	16	17	18	19	20	21	22	23	24	25	26	27	28	29	BC	F	S	T	P	ANCHOR BOLT SIZE
MAP-2	B	33	16						30	18						20	18									12.5	8		45	2						

NOTE:
DETAILS
NTS

DOUBLE MAST ARM CANTILEVER / FOOTING DETAIL SHEET

Why is this sheet not combined with previous sheet?

PREPARED BY JAR DATE $$$DATE$$$
CHECKED BY CMB DATE $$$DATE$$$
DESIGN SUPERVISOR _____ DATE _____
PROJ. ST. ALBANS
HPP 8000(17) 101/100
TRAFFIC SIGNAL SHEET NO. 4
SHEET 124 OF 230 SHEETS

VHB 57414.00

TRAFFIC CONTROL NOTES

two weeks VTrans Spec book

GENERAL

THE FEDERAL STREET CONNECTOR PROJECT IS INTENDED TO BE CONSTRUCTED IN PHASES. THE PROJECT WILL BE IN BROKEN UP INTO SMALLER PROJECTS TO MATCH THE AVAILABLE FUNDING. THE CONTRACTOR SHALL BE RESPONSIBLE FOR DEVELOPING A PROJECT SPECIFIC TRAFFIC CONTROL PLAN TO MATCH EACH CONSTRUCTION PHASE.

THE FOLLOWING TRAFFIC CONTROL INFORMATION IS INTENDED TO BE A CONCEPTUAL PLAN FOR HOW THE WORK MAY PROCEED. THE CONTRACTOR SHALL SUBMIT A DETAILED TRAFFIC CONTROL PLAN TO THE RESIDENT ENGINEER. THE CONTRACTOR SHALL ALLOW AT LEAST ONE (1) WEEK FOR REVIEW AND APPROVAL. ALL CHANGES TO THE TRAFFIC CONTROL PLAN MUST BE APPROVED BY THE CITY OF ST. ALBANS AND THE ENGINEER. MODIFICATIONS TO THE APPROVED TRAFFIC CONTROL PLAN FOR VEHICLES OR PEDESTRIANS SHALL BE SUBMITTED TO THE ENGINEER AT LEAST ONE WEEK PRIOR TO THE IMPLEMENTATION OF THE CHANGE.

THE CONTRACTOR'S TRAFFIC CONTROL PLAN SHALL BE DEVELOPED IN ACCORDANCE WITH THE 2011 EDITION OF VTRANS STANDARD SPECIFICATIONS SECTION 641 - TRAFFIC CONTROL AND IN SUBSTANTIAL CONFORMANCE WITH THE 2009 EDITION OF THE MANUAL ON UNIFORM TRAFFIC CONTROL DEVICES (MUTCD) WITH LATEST INTERIMS. THE PLAN SHALL ACCOMMODATE VEHICLE TRAFFIC, PEDESTRIAN TRAFFIC, AND EMERGENCY SERVICES. THE TRAFFIC CONTROL PLAN SHALL INCLUDE ALL TEMPORARY SIGNS, PAVEMENT MARKINGS, CHANNELIZING DEVICES, PORTABLE MESSAGE BOARDS, ARROW PANELS, AND OTHER DEVICES REQUIRED TO PROVIDE COMPLETE MANAGEMENT OF TRAFFIC. ANY SIGNS NOT INCLUDED IN THE FHWA STANDARD HIGHWAY SIGNS BOOK SHALL INCLUDE SIGN FACE DIMENSIONS AND LAYOUT.

TRAFFIC SHALL BE MAINTAINED AT ALL TIMES. THE WORK SHALL INCLUDE ERECTING, MAINTAINING, AND REMOVING ALL TEMPORARY SIGNING AS SHOWN IN THE PLANS, AS REQUIRED BY SITE SPECIFIC WORK, AND AS DIRECTED BY THE ENGINEER.

DURING THE STAGED CONSTRUCTION, TRAFFIC CONTROL PLANS SHALL BE ESTABLISHED TO MAINTAIN THE CONTINUITY OF VEHICLE AND PEDESTRIAN TRAFFIC THROUGH THE CORRIDOR. SIGNS SHALL BE ADJUSTED AT THE COMPLETION OF EACH CONSTRUCTION PHASE AS SHOWN ON THE TRAFFIC CONTROL PLANS AND AS DIRECTED BY THE ENGINEER. THE CONTRACTOR SHALL MAINTAIN TEMPORARY SIGNING, AND OTHER SUPPORTING TRAFFIC CONTROLS THROUGHOUT CONSTRUCTION. INSTALLING, MAINTAINING, ADJUSTING, MODIFYING, AND REMOVING TRAFFIC CONTROLS SHALL BE INCLUDED IN THE UNIT PRICE BID FOR CONTRACT ITEM 641.10 TRAFFIC CONTROL.

TRAFFIC SHALL NOT BE CHANGED FROM ONE PHASE TO THE NEXT UNTIL ALL TEMPORARY SIGNING REQUIRED FOR THE SUBSEQUENT PHASE IS COMPLETED. ANY CONFLICTING PAVEMENT MARKINGS SHALL BE MASKED WITH PAVEMENT MARKING MASK OR REMOVED BY GRINDING. EXISTING PAVEMENT MARKINGS THAT ARE TO REMAIN FOR LATER USE SHALL BE MASKED WITH PAVEMENT MARKING MASK. PAVEMENT MARKING MASK AND/OR REMOVAL OF EXISTING PAVEMENT MARKINGS SHALL BE INCLUDED IN THE UNIT PRICE BID FOR CONTRACT ITEM 641.10 TRAFFIC CONTROL.

EACH SEGMENT OF ROADWAY CONSTRUCTED SHALL ALLOW FOR ALL UTILITY INSTALLATION AND DRAINAGE INSTALLATION. EACH SEGMENT SHALL PROVIDE INTERIM PLACEMENT OF DRAINAGE GRATES AS NEEDED. TEMPORARY PAVEMENT MARKINGS SHALL BE PLACED ON ALL RECONSTRUCTED ROADWAY SEGMENTS PRIOR TO OPENING THAT SEGMENT TO TRAFFIC. AT THE COMPLETION OF ALL CONSTRUCTION PHASES, THE CONTRACTOR SHALL APPLY THE TOP COURSE PAVEMENT AND APPLY THE FINAL PAVEMENT MARKINGS.

REFLECTORIZED DRUMS SHALL BE USED TO DELINEATE THE WORK ZONE FROM THE TRAVELED WAY FOR VERTICAL DROP OFFS OF NOT MORE THAN THREE INCHES. FOR VERTICAL GRADE CHANGES GREATER THAN THREE INCHES, THE SLOPE ADJACENT TO THE TRAVELED WAY SHALL BE AT LEAST 4H:1V OR FLATTER WHEN UNATTENDED AND SHALL BE SEPARATED FROM THE TRAVELED WAY BY THREE HORIZONTAL FEET AND REFLECTORIZED DRUMS. FOR SHORT DURATIONS OF NOT MORE THAN THREE DAYS, THE SLOPE ADJACENT TO THE TRAVELED WAY MAY BE 3H:1V BEHIND DRUMS. DURING ACTIVE AND ATTENDED CONSTRUCTION ACTIVITIES, AND IN THE PRESENCE OF UNIFORMED TRAFFIC OFFICERS, THE ADJACENT STREET TRAFFIC SHALL BE A MINIMUM OF THREE FEET FROM THE EDGE OF THE EXCAVATION AND DELINEATED BY REFLECTORIZED DRUMS. IF THE GRADE CHANGE ADJACENT TO THE TRAVELED WAY IS MORE SEVERE THAN THESE CONDITIONS IN A WORK AREA , TEMPORARY CONCRETE BARRIER WALL SHALL BE USED TO SEPARATE THE WORK ZONE FROM ADJACENT TRAFFIC. ALL TEMPORARY CONCRETE BARRIER WALL SHALL HAVE THE BLUNT ENDS THAT FACE ON-COMING TRAFFIC PROTECTED IN ACCORDANCE WITH THE AASHTO ROADSIDE DESIGN GUIDE AND VAOT STANDARDS. TEMPORARY CONCRETE BARRIER WILL BE SUBSIDIARY TO ITEM 641.10, TRAFFIC CONTROL.

EXISTING SIGNS SHALL REMAIN UNTIL THEY ARE NO LONGER REQUIRED. EXISTING SIGNS WHICH CONFLICT WITH TEMPORARY TRAFFIC CONTROLS SHALL BE COMPLETELY COVERED WITH SOLID COVERS PAINTED BLACK OR REMOVED/RELOCATED AS NEEDED. TEMPORARY SIGNS SHALL BE INSTALLED AS SHOWN IN THE PLANS AND THE CONTRACTOR'S APPROVED TRAFFIC CONTROL PLANS. NEW SIGNING SHALL BE INSTALLED AS IT BECOMES APPLICABLE. ALL PROPOSED SIGNING SHALL BE INSTALLED AND ALL SIGNS TO BE REMOVED SHALL BE REMOVED PRIOR TO THE APPLICATION OF THE FINAL PAVEMENT MARKINGS.

CONTRACTOR SHALL MAINTAIN PEDESTRIAN ACCESS TO ALL COMMERCIAL AND MUNICIPAL PROPERTIES DURING BUSINESS HOURS. PEDESTRIAN ACCESS SHALL MEET ALL APPLICABLE AMERICANS WITH DISABILITIES ACT (ADA) REQUIREMENTS. POSITIVE GUIDANCE SHALL BE PROVIDED TO SEPARATE PEDESTRIAN ACCESS FROM THE WORK AREA AND VERTICAL GRADE CHANGES. ACCESS TO PROPERTIES MAY BE RESTRICTED FOR SHORT DURATIONS OF NOT MORE THAN TWO HOURS WITH THE PERMISSION AND PRIOR NOTIFICATION OF THE OWNER DURING BUSINESS HOURS. CONTRACTOR SHALL COORDINATE MAJOR WORK ADJACENT TO COMMERCIAL AND MUNICIPAL ACCESS AREAS WITH THE OWNER AND CITY AT LEAST ONE WEEK PRIOR TO STARTING THE WORK IN THE AREA.

SPECIAL CARE MUST BE TAKEN TO PROVIDE ACCESS THROUGH THE WORK ZONES FOR EMERGENCY VEHICLES. THE CONTRACTOR SHALL COORDINATE WITH BOTH POLICE AND FIRE DEPARTMENTS TO DETERMINE THEIR MINIMUM ACCESS REQUIREMENTS BEFORE PROCEEDING TO THE NEXT PHASE OF CONSTRUCTION. CONTRACTOR SHALL ENSURE THAT ACCESS IS AVAILABLE TO ALL PROPERTIES AT ALL TIMES FOR EMERGENCY VEHICLES.

COORDINATION WITH ADJACENT CITY PROJECTS

THE CONTRACTOR SHALL BE AWARE THAT THERE MAY BE OTHER STATE, CITY AND PRIVATE CONSTRUCTION PROJECTS PLANNED TO BE UNDER CONSTRUCTION EITHER ADJACENT TO OR IN THE VICINITY OF THIS PROJECT. THE CONTRACTOR SHALL COORDINATE CONSTRUCTION SEQUENCING AND TRAFFIC CONTROL MEASURES WITH THE CITY AND THE RESIDENT ENGINEER TO MINIMIZE CONFLICTS BETWEEN PROJECTS. RESTRICTIONS TO LANE, STREET OR SIDEWALK CLOSURES MAY BE REQUIRED BETWEEN PROJECTS TO EFFICIENTLY MOVE VEHICLE AND PEDESTRIAN TRAFFIC THRU THE CONSTRUCTION AREA.

TRAFFIC MANAGEMENT AND ROADWAY CONSTRUCTION SEQUENCING

IT IS POSSIBLE THAT THE WORK WILL NOT ALL BE COMPLETED IN THE FIRST CALENDAR YEAR AND THIS COULD REQUIRE ONE (1) WINTER SHUTDOWN PERIOD WHEN THE WEATHER IS NOT CONDUCIVE TO CONTINUED CONSTRUCTION ACTIVITIES. THE CONTRACTOR AND ENGINEER SHALL COORDINATE THE BEGINNING AND ENDING OF THE WINTER SHUTDOWN PERIODS IN ACCORDANCE WITH VAOT PROCEDURES. AT LEAST TWO (2) WEEKS PRIOR TO THE ANTICIPATED WINTER SHUTDOWN, THE CONTRACTOR SHALL PREPARE ALL WORK AREAS TO BE REOPENED TO TRAFFIC. THIS INCLUDES PROVIDING A PAVED SURFACE FOR ALL STREETS AND SIDEWALKS, FRESH PAINTED PAVEMENT MARKINGS, AND ALL NECESSARY TRAFFIC SIGNS.

FINAL PAVING SHALL BE PERFORMED AT NIGHT WITH THE DATES AND HOURS OF OPERATION COORDINATED WITH AND APPROVED BY THE ENGINEER AND THE CITY.

PEDESTRIAN TEMPORARY TRAFFIC CONTROL NOTES

1. THE CONTRACTOR SHALL MAINTAIN PEDESTRIAN THROUGH MOVEMENTS FROM ONE END OF THE CONSTRUCTION AREA TO THE OTHER, ON AT LEAST ONE SIDE OF THE STREET DURING CONSTRUCTION. ANY SIDEWALK CLOSURES SHALL MEET THE REQUIREMENTS OF THE MUTCD, PART 6.
2. PEDESTRIAN ACCESS SHALL BE PROVIDED TO ALL ADJACENT PROPERTIES, BUILDINGS, RESIDENCES AND COMMERCIAL PROPERTIES AT ALL TIMES. THIS MAY INCLUDE TEMPORARY WALKWAYS SPANNING THE CONSTRUCTION AREA.
3. IF SIDEWALKS ARE CLOSED, A TEMPORARY PEDESTRIAN ACCESS ROUTE (TPAR) SHALL BE PROVIDED ON THE SAME SIDE OF THE ROAD AS THE CLOSED SIDEWALK, IF POSSIBLE. SIGNS AND BARRICADES SHALL BE USED TO PROVIDE ADVANCE NOTICE OF THE CLOSURE AND THE ROUTE OF ANY PEDESTRIAN DETOURS. THE TPAR SHALL HAVE A MINIMUM UNOBSTRUCTED WIDTH OF 4 FEET. IF THE TPAR IS LESS THAN 5 FEET IN WIDTH, A 5 FOOT BY 5 FOOT PASSING SPACE SHOULD BE PROVIDED AT LEAST EVERY 200 FEET. THE SURFACE OF THE TPAR SHALL BE SMOOTH AND CONTINUOUS FOR THE LENGTH OF THE TPAR. THE TPAR SHALL MAINTAIN THE SAME LEVEL OF ACCESSIBILITY AND DETECTABILITY AS THE FACILITY THAT IS BEING CLOSED. THE TPAR SHALL NOT LEAD PEDESTRIANS INTO CONFLICTS WITH VEHICLES, EQUIPMENT, OR CONSTRUCTION OPERATIONS.
4. IF THE TPAR IS ADJACENT TO MOVING TRAFFIC, CONSTRUCTION OPERATIONS/EQUIPMENT, OR DROP-OFFS, THEN CRASH WORTHY CHANNELIZING DEVICES THAT MEET THE REQUIRMENTS OF THE MUTCD SHALL BE USED.
5. THE CONTRACTOR SHALL NOT STORE OR PLACE ANY CONSTRUCTION MATERIALS, EQUIPMENT OR SIGNS IN THE PEDESTRIAN PATH OF TRAVEL.
6. THE CONTRACTOR'S OPERATIONS SHALL NOT OCCUPY SIDEWALKS EXCEPT WHERE PROPER PROTECTION AND A TPAR HAVE BEEN PROVIDED.
7. THE CONTRACTOR SHALL PROVIDE A TEMPORARY PEDESTRIAN TRAFFIC CONTROL PLAN FOR REVIEW AND WRITTEN APPROVAL A MINIMUM OF TWO WEEKS BEFORE SUCH PLAN IS IMPLEMENTED. THIS PLAN SHALL DETAIL THE CONSTRUCTION PHASING AND SCHEDULE AND THE SPECIFIC METHODS OF MAINTAINING SAFE PEDESTRIAN ACCESS THROUGHOUT THE CONSTRUCTION AREA. THIS PLAN SHALL PROVIDE THE LOCATION AND DETAILS OF TEMPORARY CONSTRUCTION SIGNING, MARKINGS, BARRICADES, CHANNELIZING DEVICES, TPARs AND METHODS TO MAINTAIN ACCESS TO ADJACENT PROPERTIES, BUSINESSES, RESIDENCES, ETC.

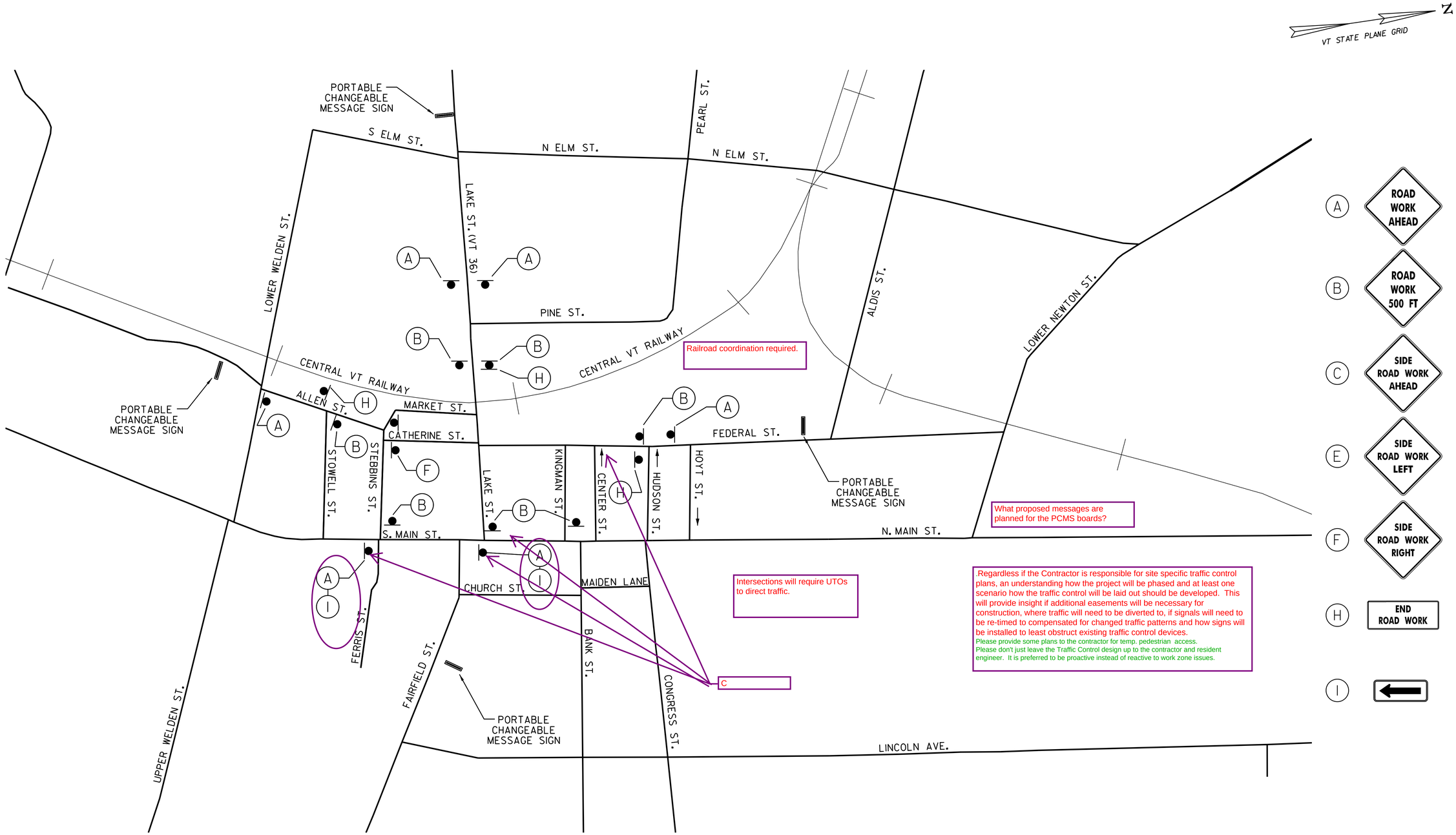

.Regardless if the Contractor is responsible for site specific traffic control plans, an understanding how the project will be phased and at least one scenario how the traffic control will be laid out should be developed. This will provide insight if additional easements will be necessary for construction, where traffic will need to be diverted to, if signals will need to be re-timed to compensated for changed traffic patterns and how signs will be installed to least obstruct existing traffic control devices.

Please provide some plans to the contractor for temp. pedestrian access.

Please don't just leave the Traffic Control design up to the contractor and resident engineer. It is preferred to be proactive instead of reactive to work zone issues.

TYPICAL CONSTRUCTION APPROACH SIGNING FOR A PHASE I PROJECT THAT INCLUDES THE FOLLOWING:

MARKET STREET RECONSTRUCTION
CATHERINE STREET RECONSTRUCTION
FEDERAL STREET RECONSTRUCTION (LAKE STREET - KINGMAN STREET)
LAKE STREET RECONSTRUCTION (NECR RAILROAD TO FEDERAL STREET)
ALLEN STREET / STEBBINS STREET INTERSECTION RECONSTRUCTION

0 300 600
SCALE IN FEET

PROJECT NAME: ST. ALBANS	
PROJECT NUMBER: HPP 8000(17)	
FILE NAME: 57414_CONS.dgn	PLOT DATE: 3/4/2016
PROJECT LEADER: J. D. SALADINO	DRAWN BY: G.A. GOMEZ
DESIGNED BY: M.J. SERVETAS	CHECKED BY: M.J. SERVETAS
CONSTRUCTION APPROACH SIGNING PLAN	SHEET 126 OF 230

VHB 57414.00

EPSC PLAN NARRATIVE

1.1 PROJECT DESCRIPTION

THIS PROJECT, ST. ALBANS HPP 8000(17), IS LOCATED WEST ON MAIN STREET IN ST. ALBANS VERMONT. THE PROJECT WILL CONSIST OF THE FOLLOWING PRINCIPAL COMPONENTS:

- CONSTRUCTION OF THE NASON STREET CONNECTOR, 1000-FT OF NEW ROADWAY CONNECTING THE INTERSTATE ACCESS ROAD WITH LEMNAH DRIVE.
- REALIGNMENT OF LEMNAH DRIVE AND ALLEN STREET
- REPLACEMENT OF THE LEMNAH DRIVE BRIDGE OVER STEVENS BROOK WITH A XX-FT WIDE, XX-FT TALL, XX-FT LONG PRECAST CONCRETE BOX CULVERT
- RECONSTRUCTION OF THE LOWER WELDEN STREET, LEMNAH DRIVE, AND ALLEN STREET INTERSECTION
- RECONSTRUCTION OF MARKET STREET, AND CATHERINE STREET.
- RECONSTRUCTION OF THE LAKE STREET, CATHERINE STREET, MARKET STREET, FEDERAL STREET INTERSECTION.
- REHABILITATION OF FEDERAL STREET
- VERTICAL REALIGNMENT AND WIDENING OF LOWER NEWTON ROAD
- INSTALLATION OF DRAINAGE INFRASTRUCTURE, INCLUDING STORMWATER TREATMENT PONDS, *SUBSURFACE CATCHMENT AND CONVEYANCE STRUCTURES, REHABILITATION OF EXISTING* STORMWATER STRUCTURES, AND TYING INTO EXISTING MUNICIPAL STORMWATER SYSTEMS.

NOTE: AREA OF DISTURBANCE INCLUDES LIMITS OF EARTH DISTURBANCE WITHIN THE PROJECT AREA, AS WELL AS WASTE, BORROW AND STAGING AREAS, AND OTHER EARTH DISTURBING ACTIVITIES WITHIN OR DIRECTLY ADJACENT TO THE PROJECT LIMITS AS SHOWN ON THE ATTACHED EPSC PLAN.

TOTAL AREA OF DISTURBANCE AS SHOWN ON THE ATTACHED EPSC PLAN IS APPROXIMATELY 11.5 ACRES.

THE PROJECT WILL BE CONSTRUCTED IN SIX CONSTRUCTION PHASES AS FUNDING FOR EACH PHASE BECOMES AVAILABLE. SEE SECTION 1.5 SEQUENCING AND STAGING FOR MORE INFORMATION.

1.2 SITE INVENTORY

1.2.1 TOPOGRAPHY

THE TOPOGRAPHY OF THE AREA IS MOSTLY DEVELOPED URBAN AREA. THE GRADE GENERALLY RUNS FROM EAST TO WEST TOWARD LAKE CHAMPLAIN. THE NASON STREET CONNECTOR AND LOWER NEWTON ROAD ARE THE ONLY TWO ROADS WITH SIGNIFICANT GRADE; 5% ON THE CONNECTOR AND 10% ON LOWER NEWTON ROAD.

1.2.2 DRAINAGE, WATERWAYS, BODIES OF WATER, AND PROXIMITY TO NATURAL OR MAN-MADE WATER FEATURES

THE PROJECT FALLS INTO THE WATERSHEDS OF STEVENS AND RUGG BROOK. BOTH ARE ON THE VERMONT IMPAIRED SURFACE WATER LIST 303(d).

STEVENS BROOK IS HEAVILY CHANNELIZED WITH ROCK AND CONCRETE WALLS AS IT FLOWS THROUGH DOWNTOWN ST. ALBANS. THE STREAMBED HAS A WIDE GRADATION FROM LARGE BOULDERS TO VERY SMALL FINES. THE SLOPE OF THE STREAM IN THE VICINITY OF THE BRIDGE REPLACEMENT IS VERY FLAT (~0.5%)

THE NASON CONNECTOR AND A PORTION OF LEMNAH ON THE SOUTHERN PORTION OF THE PROJECT FLOWS TO RUGG BROOK. RUGG BROOK FLOWS THROUGH THE RESIDENTIAL LAND USE WEST OF STEVENS BROOK AND EVENTUALLY TO LAKE CHAMPLAIN.

1.2.3 VEGETATION

VEGETATION IN THE AREA IS LIMITED TO THE AREA WHERE THE NASON CONNECTOR WILL BE CONSTRUCTED AND THE WEST SIDE OF LEMNAH DRIVE IN THE LOCATION OF WHERE THE NEW ALIGNMENT AND REPLACEMENT CULVERT WILL BE CONSTRUCTED. IN BOTH OF THESE LOCATIONS, THE VEGETATION IS MOSTLY HARDWOOD TREES WITH DENSE UNDERGROWTH. IN EACH OF THESE LOCATIONS THE UNDER GROWN IS ALSO LITTERED WITH TRASH WHICH WILL NEED TO BE DISPOSED OF. DISTURBED VEGETATION WILL BE REESTABLISHED WITH STANDARD SEED AND MULCH PRACTICES.

1.2.4 SOILS

ALL SOIL DATA CAME FROM THE U.S. DEPARTMENT OF AGRICULTURE NATURAL RESOURCE CONSERVATION SERVICE FOR THE COUNTY OF FRANKLIN, VERMONT.

SOILS ON THE PROJECT ARE AS FOLLOWS:

- COPAKE FINE SANDY LOAM: K=0.20
- MASSENA STONY LOAM: K=0.28
- RUMNEY VARIANT SILT LOAM: K=0.32
- GEORGIA STONY LOAM: K=0.28

ALL OF THESE SOILS HAVE A MODERATE EROSION POTENTIAL EXCEPT THE COPAKE LOAM WHICH IS LOW.

NOTE: K-VALUES GENERALLY INDICATE THE FOLLOWING:
0.0-0.23 = LOW EROSION POTENTIAL
0.24-0.36 = MODERATE EROSION POTENTIAL
0.37 AND HIGHER = HIGH EROSION POTENTIAL

1.2.5 SENSITIVE RESOURCE AREAS

CRITICAL HABITATS: NO
HISTORICAL AREAS: A PORTION OF THE PROJECT FALLS WITHIN THE ST. ALBANS HISTORIC DISTRICT BUT NO BUILDINGS ARE BEING EFFECTED.
ARCHEOLOGICAL AREAS: NO HIGH RISK ARCHEOLOGICAL AREAS WERE IDENTIFIED WITHIN THE PROJECT AREA.
PRIME AGRICULTURAL LAND: NO
THREATENED AND ENDANGERED SPECIES: NO
WATER RESOURCE: STEVENS BROOK AND RUGG BROOK, BOTH IMPAIRED WATERSHEDS ON THE IMPAIRED SURFACE WATERS LIST 303(D)
WETLANDS: TWO WETLANDS WERE IDENTIFIED IN THE VICINITY OF THE PROJECT AREA BOTH ON THE SOUTH WEST SIDE OF THE PROJECT NEAR THE NASON STREET CONNECTOR.

- WETLAND B: 32,300 SQ-FT REGULATED WETLAND
- WETLAND F: 2,930 SQ-FT NON-REGULATED WETLAND

1.3 RISK EVALUATION

CONTRACTOR ACTIVITIES SHALL ADHERE TO THESE PLANS, THE CONDITIONS OF THE INDIVIDUAL CONSTRUCTION STORMWATER DISCHARGE PERMIT (INDC), AND THE VERMONT STANDARDS & SPECIFICATIONS FOR EROSION PREVENTION & SEDIMENT CONTROL (2006, AMENDED 2008).

1.4 EROSION PREVENTION AND SEDIMENT CONTROL

THE EROSION CONTROL PLANS ARE MEANT AS A GUIDELINE FOR PREVENTING EROSION AND CONTROLLING SEDIMENT TRANSPORT. THE PRINCIPLES OUTLINED IN THIS NARRATIVE CONSIST OF APPLYING MEASURES THROUGHOUT CONSTRUCTION OF THE PROJECT IN ORDER TO MINIMIZE SEDIMENT TRANSPORT TO THE RECEIVING WATERS. THE MEASURES INCLUDE STABILIZATION AND STRUCTURAL PRACTICES, STORM WATER CONTROLS AND OTHER POLLUTION PREVENTION PRACTICES. THEY HAVE BEEN PROPOSED BY THE DESIGNER AS A BASIS FOR PROTECTING RESOURCES AND WILL NEED TO BE BUILT UPON BASED ON THE SPECIFIC MEANS AND METHODS OF THE CONTRACTOR.

CONTRACTOR ACTIVITIES SHALL ADHERE TO THESE PLANS, THE CONDITIONS OF THE INDIVIDUAL CONSTRUCTION STORMWATER DISCHARGE PERMIT (INDC), AND THE VERMONT STANDARDS & SPECIFICATIONS FOR EROSION PREVENTION & SEDIMENT CONTROL (2006, AMENDED 2008).

EPSC MEASURES SHALL BE INSTALLED PRIOR TO EARTH DISTURBING ACTIVITIES WITH THE EXCEPTION OF LAND DISTURBANCE THAT MAY RESULT FROM ACCESSING THE AREA(S) WITH EQUIPMENT IN ORDER TO INSTALL THOSE EPSC MEASURES. TEMPORARY EPSC MEASURES INTENDED TO TRAP SEDIMENT SHALL BE INSTALLED AS A FIRST STEP IN LAN DISTURBING ACTIVITIES AND SHALL BE MADE FUNCTIONAL BEFORE UPSLOPE LAND DISTURBANCE TAKES PLACE, WITH THE EXCEPTION OF THOSE LAND DISTURBING ACTIVITIES THAT ARE NECESSARY TO INSTALL THE MEASURES.

1.4.1 EPSC SPECIALIST OVERSIGHT

THE EPSC SPECIALIST DESIGNATED TO THE PROJECT SHALL:

a. BE RESPONSIBLE FOR PERFORMING ENVIRONMENTAL INSPECTIONS AND REPORTING AT A FREQUENCY PURSUANT TO THE CONSTRUCTION STORMWATER DISCHARGE PERMIT ISSUED FOR THE PROJECT.
b. BE RESPONSIBLE FOR ASSESSING THE SITE TO ENSURE COMPLIANCE WITH THE EPSC PLAN AND DIRECTING CORRECTIVE ACTION AS NEEDED.
c. NOTIFY THE OSPC WHEN CHANGES IN PRACTICE ARE NEEDED TO COMPLY WITH THE EPSC PLAN.
   AND
d. DETERMINE/CONFIRM/REPORT THAT APPROPRIATE EPSC PLAN MODIFICATIONS ARE BEING MADE AND RECORDED AS NECESSARY.

THE EPSC SPECIALIST SHALL NOT BE THE OSPC.

EPSC SPECIALIST INSPECTIONS SHALL BE DOCUMENTED USING AN INSPECTION REPORT FOR THAT HAS BEEN APPROVED IN WRITING BY VT DEC.

EPSC SPECIALIST INSPECTIONS SHALL INCLUDE A REVIEW OF THE OSPC'S INSPECTION REPORTS.

EPSC SPECIALIST INSPECTION REPORTS SHALL BE SUBMITTED TO VT DEC AT A FREQUENCY PURSUANT TO THE CONSTRUCTION STORMWATER DISCHARGE PERMIT, AS WELL AS BEING MAINTAINED ON-SITE FOR THE DURATION OF THE PROJECT AND MADE AVAILABLE TO VT DEC UPON REQUEST.

1.4.2 ON-SITE PLAN COORDINATOR (OSPC)

UNDER THE INDC, A FULL TIME ON-SITE PLAN COORDINATOR (OSPC) IS REQUIRED. THE OSPC MUST BE KNOWLEDGEABLE OF EPSC PRACTICES AND IS RESPONSIBLE FOR THE ON-SITE IMPLEMENTATION OF THE EPSC PLAN.

THE OSPC DESIGNATED TO THE PROJECT (AND HIS/HER DESIGNEE) SHALL:

a. REVIEW VT DEC'S "ON-SITE PLAN COORDINATOR MANUAL."
b. BE ON-SITE ON A DAILY BASIS (OR HAVE A DESIGNEE THAT IS ON-SITE WHEN HE/SHE CANNOT BE).
c. BE DIRECTLY RESPONSIBLE FOR ON-SITE IMPLEMENTATION OF THE EPSC PLAN.
d. BE KNOWLEDGEABLE IN THE PRINCIPLES AND PRACTICES OF EPSC.
e. POSSESS THE SKILLS AND EQUIPMENT TO ASSESS CONDITIONS AT THE CONSTRUCTION SITE THAT COULD IMPACT STORMWATER QUALITY.
f. POSSESS THE SKILLS TO ASSESS THE EFFECTIVENESS OF EPSC MEASURES SELECTED TO CONTROL THE QUALITY OF STORMWATER DISCHARGES FROM CONSTRUCTION ACTIVITY.
g. POSSESS THE SKILLS AND EQUIPMENT TO CONDUCT TURBIDITY MONITORING PURSUANT TO THE CONSTRUCTION STORMWATER DISCHARGE PERMIT.
   AND
h. HAVE THE AUTHORITY TO STOP AND/OR MODIFY CONSTRUCTION ACTIVITIES AS NECESSARY TO COMPLY WITH THE EPSC PLAN AND THE CONSTRUCTION STORMWATER DISCHARGE PERMIT.

ALL PROPOSED CHANGES TO THE EPSC PLAN MUST BE APPROVED BY THE OSPC OR HIS/HER DESIGNEE, THE PLAN DESIGNER OR A CERTIFIED PROFESSIONAL IN EROSION AND SEDIMENT CONTROL (CPESC_ PRIOR TO IMPLEMENTATION, AND BE CONSIDERED MINOR AMENDMENTS AS DEFINED IN THE OSPC HANDBOOK. ALL MINOR AMENDMENTS ARE TO BE RECORDED USING THE MINOR AMENDMENT RECORD FORM AND MARKED ON THE MASTER OSPC PLANSET. ALL MODIFICATIONS THAT FALL OUTSIDE OF THE MINOR AMENDMENT DEFINITION MUST BE APPROVED BY THE VT DEC.

DURING THE REGULAR CONSTRUCTION SEASON (APRIL 12 TO OCT 15), THE OSPC OR HIS/HER DESIGNEE SHALL CONDUCT INSPECTIONS AT LEAST ONCE EVERY SEVEN (7) CALENDAR DAYS AND WITHIN 24 HOURS FOLLOWING A STORM EVENT RESULTING IN DISCHARGE OF STORMWATER FROM THE CONSTRUCTION SITE.

DURING THE WINTER CONSTRUCTION SEASON (OCT 15 TO APRIL 15), THE OSPC OR HIS/HER DESIGNEE SHALL CONDUCT INSPECTIONS ON A DAILY BASIS DURING ACTIVE EARTHWORK.

THE OSPC AND HIS/HER DESIGNEE(S) SHALL FOLLOW TURBIDITY MONITORING PROTOCOLS OUTLINED IN THE VT DEC'S "MONITORING OF TURBIDITY IN STORMWATER RUNOFF FROM CONSTRUCTION ACTIVITIES" MANUAL.

INSPECTIONS CONDUCTED BY THE OSPC OR HIS/HER DESIGNEE SHALL COVER ALL AREAS OF THE SITE THAT ARE BEING ACTIVELY DISTURBED BY CONSTRUCTION OR CONSTRUCTION RELATED ACTIVITIES, INCLUDING AREAS THAT HAVE BEEN TEMPORARILY STABILIZED.

OSPC INSPECTIONS SHALL BE DOCUMENTED USING THE VT DEC INSPECTION REPORT FOR OR A VT DEC ACCEPTED INSPECTION REPORT FORM.

OSPC INSPECTION REPORTS SHALL BE MAINTAINED ON-SITE FOR THE DURATION OF THE PROJECT AND MADE AVAILABLE TO VT DEC UPON REQUEST.

1.4.3 INSPECTION REQUIREMENTS

INSPECTIONS SHALL BE CONDUCTED AT LEAST ONCE EVERY SEVEN (7) CALENDAR DAYS, WITH ADDITIONAL INSPECTION FREQUENCY REQUIRED FOR RAIN EVENT, WINTER CONSTRUCTION, AND VISIBLE DISCHARGES PER THE CONDITIONS OF PART 6 OF THE GENERAL PERMIT. A WRITTEN REPORT SHALL BE COMPLETED FOR EACH INSPECTION AND SIGNED BY THE OSPC. ALL REPORTS ARE TO BE MAINTAINED ON-SITE AND MADE AVAILABLE TO STATE DEC REPRESENTATIVES UPON REQUEST. AN OSPC INSPECTION REPORT FOR PROJECTS UNDER INDIVIDUAL DISCHARGE PERMIT CAN BE FOUND ON THE VERMONT DEC WEBSITE AT http://www.vtwaterquality.org/stormwater/docs/construction/sw_INDC-OSPC-Inspection%20Form.doc

1.4.4 MARK SITE BOUNDARIES

CONSTRUCTION DEMARCATION AND PERIMETER CONTROLS SHALL COMPLY WITH THE FOLLOWING:

CONSTRUCTION DEMARCATION:

a. CONSTRUCTION DEMARCATION TO BE INSTALLED ALONG PERIMETER OF LIMITS OF DISTURBANCE PER THE EPSC PLAN.
b.

1.4.5 LIMIT DISTURBANCE AREA

PREVENTING INITIAL SOIL EROSION BY MINIMIZING THE EXPOSED AREA IS MUCH MORE EFFECTIVE THAN TREATING ERODED SEDIMENT. EARTH DISTURBANCE CAN BE MINIMIZED THROUGH CONSTRUCTION PHASING BY ONLY OPENING UP EARTH AS NECESSARY. THIS CAN LIMIT THE AREA THAT WILL BE DISTURBED AND EXPOSED TO EROSION. EMPLOY TEMPORARY CONSTRUCTION STABILIZATION PRACTICES IN INCREMENTAL STAGES AS PHASES CHANGE. FOR PROJECTS WHICH FALL UNDER THE CONSTRUCTION GENERAL PERMIT, ONLY THE ACREAGE LISTED ON THE PERMIT AUTHORIZATION MAY BE EXPOSED AT ANY GIVEN TIME.

MAINTAINING VEGETATED BUFFERS ALONG STREAM BANKS, WETLANDS OR OTHER SENSITIVE AREAS IS A CRUCIAL EROSION AND SEDIMENT CONTROL MEASURE THAT SHOULD BE ESTABLISHED WHEREVER POSSIBLE.

1.4.6 SITE ENTRANCE/EXIT STABILIZATION
TRACKING OF SEDIMENT ONTO PUBLIC HIGHWAYS SHALL BE MINIMIZED TO REDUCE THE POTENTIAL FOR RUNOFF ENTERING RECEIVING WATERS. INSTALLATION SHALL COINCIDE WITH THE CONTRACTORS PROGRESS SCHEDULE.

STABILIZED CONSTRUCTION ENTRANCES SHALL BE INSTALLED AS PROPOSED ON THE EPSC PLAN AND ANYWHERE EQUIPMENT WILL BE GOING FROM AREAS OF EXPOSED SOILS TO PAVED SURFACES.

STABILIZED CONSTRUCTION ENTRANCES SHALL BE MAINTAINED REGULARLY TO CONTROL EQUIPMENT AND VEHICLES FROM TRACKING MATERIAL OFFSITE AND ONTO ROADWAYS.

SWEEPING OF ROADWAYS WILL BE CONDUCTED AS NEEDED TO PREVENT TRANSPORTATION OF SEDIMENT FROM THE SITE.

1.4.7 INSTALL SEDIMENT BARRIERS
SEDIMENT BARRIERS SHALL BE UTILIZED TO INTERCEPT RUNOFF AND ALLOW SUSPENDED SEDIMENT TO SETTLE OUT. THEY SHALL BE INSTALLED PRIOR TO ANY UP SLOPE WORK.

SILT FENCE WILL BE INSTALLED AS PROPOSED ON THE EPSC PLAN. WOVEN WIRE REINFORCED SILT FENCE SHALL BE USED INSTEAD OF SILT FENCE WITHIN 100 FEET UPSLOPE OF RECEIVING WATERS.

1.4.8 INSTALL STORM DRAIN INLET PROTECTION
ALL EXISTING AND PROPOSED STORMWATER INLETS IN THE CONSTRUCTION AREA SHALL HAVE INLET PROTECTION INSTALLED TO PREVENT SEDIMENT LADEN WATER FROM ENTERING A STORM DRAIN SYSTEM THROUGH INLETS.

SEDIMENT FROM STORMWATER ENTERING DRAIN INLET SHALL BE REDUCED BY PONDING OR PASSING THROUGH A SEMI-PERMEABLE FILTER PRIOR TO ENTERING A STORM SYSTEM.

STORM DRAIN INLET PROTECTION SHALL CONFORM TO ONE OF THE 4 TYPES DEPICTED IN THE VT DEC EPSC MANUAL AND CHOSEN BASED ON THE BEST SUITED FOR THE TYPE OF INLET.

FILTER FABRIC SHALL HAVE AN AOS OF 40-85.

DRAINAGE STONE SHALL BE CLEAN STONE OR GRAVEL UNIFORMLY SIZED FROM ½" TO ¾".

DRAINAGE AREA FOR A STORM DRAIN INLET SHALL NOT EXCEED ONE ACRE. THE CREST ELEVATIONS OF THESE PRACTICES SHALL PROVIDES STORAGE AM MINIMIZE BYPASS FLOW.

1.4.9 DIVERT UPLAND RUNOFF
DIVERSIONARY MEASURES SHALL BE USED TO INTERCEPT RUNOFF FROM ABOVE THE CONSTRUCTION AND DIRECT IT AROUND THE DISTURBED AREA SO THAT CLEAN WATER DOES NOT BECOME MUDDIED WHILE TRAVELING OVER EXPOSED SOILS ON THE CONSTRUCTION SITE.

1.4.10 CONSTRUCT PERMANENT CONTROLS
PERMANENT STORMWATER TREATMENT DEVICES SHALL BE INSTALLED AS SHOWN ON THE PLANS AND IN ACCORDANCE WITH PERMIT CONDITIONS.

1.4.11 STABILIZE EXPOSED SOILS DURING CONSTRUCTION
ALL AREAS OF DISTURBANCE MUST HAVE TEMPORARY STABILIZATION IN PLACE WITHIN 48 HOURS OF DISTURBANCE OR IN ACCORDANCE WITH THE CONSTRUCTION GENERAL PERMIT 3-9020 AUTHORIZATION.

SURFACE ROUGHENING OF ALL EXPOSED SLOPES, COMBINED WITH TEMPORARY MULCHING, SHALL BE UTILIZED ON A REGULAR BASIS. BIODEGRADABLE EROSION CONTROL MATTING OR AN EQUIVALENT SHALL BE USED TO STABILIZE ALL SLOPES STEEPER THAN 1:3.

THE FORECAST OF RAINFALL EVENTS SHALL TRIGGER IMMEDIATE PROTECTION OF EXPOSED SOILS.

1.4.12 WINTER STABILIZATION
VARIOUS MEASURES SPECIFIC TO WINTER MAY BE NECESSARY SHOULD THE PROJECT EXTEND INTO WINTER (OCTOBER 15 THROUGH APRIL 15). REFER TO THE VERMONT STANDARDS & SPECIFICATIONS FOR EROSION & SEDIMENT CONTROL 2006 FOR GUIDANCE.

1.4.13 STABILIZE SOIL AT FINAL GRADE
EXPOSED SOIL MUST BE STABILIZED WITHIN 48 HOURS OF REACHING FINAL GRADE.

SEED, MULCH, FERTILIZER AND LIME SHALL BE USED TO ESTABLISH PERMANENT VEGETATION. FOR SLOPES STEEPER THAN 1:3, BIODEGRADABLE EROSION CONTROL MATTING OR AN EQUIVALENT SHALL BE USED INSTEAD OF MULCH.

1.4.14 DE-WATERING ACTIVITIES
DISCHARGE FROM DEWATERING ACTIVITIES THAT FLOWS OFF OF THE CONSTRUCTION SITE MUST NOT CAUSE OR CONTRIBUTE TO A VIOLATION OF THE VERMONT WATER QUALITY STANDARDS.

EFFLUENT FROM DEWATERING OPERATIONS SHALL BE FILTERED OR PASSED THROUGH A SEDIMENT TRAPPING DEVICE AND DISCHARGED IN A MATTER THAT DOES NOT RESULT IN IMPACTS TO WATER QUALITY OR CONTRIBUTE TO EROSION.

1.4.15 INSPECT YOUR SITE
INSPECT THE PROJECT SITE BASED ON SPECIAL PROVISION REQUIREMENTS OR CONSTRUCTION GENERAL PERMIT AUTHORIZATION STIPULATIONS.

1.5 SEQUENCE AND STAGING

THIS SECTION WILL BE DEVELOPED BY THE CONTRACTOR USING THE GUIDANCE OUTLINED IN THE VTRANS EPSC PLAN CONTRACTOR CHECKLIST.

1.5.1 CONSTRUCTION SEQUENCE

THE PROJECT HAS BEEN DIVIDED
INTO SIX PHASES OUTLINED BELOW:

- NASON STREET CONNECTOR: CONSTRUCTING THE NEW NASON STREET CONNECTOR AND ALSO INCLUDING APPROACH WORK ON MAIN STREET, THE I-89 ACCESS ROAD, NASON STREET, AND 250-FT NORTH ON LEMNAH DRIVE.
- LEMNAH DRIVE REALIGNMENT: FROM NASON TO THE SOUTH SIDE OF LOWER WELDEN STREET INCLUDING THE BRIDGE REPLACEMENT OVER STEVENS BROOK
- ALLEN STREET AND INTERSECTIONS: REALIGNMENT OF ALLEN ROAD INCLUDING THE LOWER WELDEN STREET AND MARKET/STEBBINS INTERSECTIONS AND APPROACH WORK
- MARKET, CATHERINE, LAKE STEBBINS, & FEDERAL STREET INTERSECTIONS: RECONSTRUCTION OF MARKET STREET, CATHERINE STREET, LAKE STREET, STEBBINS STREET, AND FEDERAL STREET NORTH TO KINGMAN STREET
- FEDERAL STREET REHABILITATION: REHABILITATION OF FEDERAL STREET FROM KINGMAN STREET TO LOWER NEWTON ROAD
- LOWER NEWTON ROAD REALIGNMENT: LOWER NEWTON ROAD VERTICAL REALIGNMENT INCLUDING THE LOWER NEWTON AND MAIN STREET INTERSECTION WORK

1.5.2 OFF-SITE ACTIVITIES

IN ADDITION TO THE CONTRACTOR CHECKLIST ANY ACTIVITIES OUTSIDE THE CONSTRUCTION LIMITS SHALL FOLLOW SPECIFICATION 105.25- 105.29 OF THE STANDARD SPECIFICATIONS FOR CONSTRUCTION.

BARRIER FENCE (LINE STYLE) 653.50	-BF-×-×-×-BF-
BRUSH LAYER 653.75, DETAIL	BL
CHECK DAM (LINE STYLE) 653.25, DETAIL	▸—▸—▸–
COFFERDAM (LINE STYLE) 208.40	
DUST CONTROL 609.10 & 15	DC
PIPE INLET PROTECTION 653.40, DETAIL	
EXCAVATED DROP INLET PROTECTION 653.40, DETAIL	
FIBER ROLL (EROSION LOG) 653.60, DETAIL	FR
FILTER BAG 653.45, DETAIL	
FILTER FABRIC DROP INLET PROTECTION 653.40, DETAIL	
PROJECT DEMARCATION FENCE (LINE STYLE) 653.55	-PDF——PDF-
ROLLED EROSION CONTROL PRODUCT (RECP) 653.20 (TEMP. EROSION MATTING)	
SILT FENCE(LINE STYLE) 649.51, DETAIL	
SILT FENCE WOVEN WIRE(LINE STYLE) 649.515, DETAIL	

ADAPTED FROM DETAILS PROVIDED BY: NEW YORK STATE DEC
ORIGINALLY DEVELOPED BY USDA-NRCS
VERMONT DEPARTMENT OF ENVIRONMENTAL CONSERVATION

STANDARD SYMBOLS

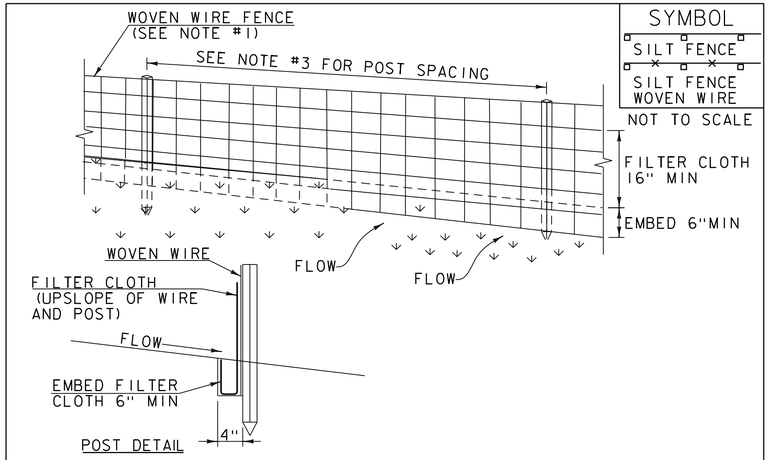

SYMBOL
SILT FENCE
SILT FENCE WOVEN WIRE
NOT TO SCALE

CONSTRUCTION SPECIFICATIONS

1. WOVEN WIRE REINFORCED FENCE IS REQUIRED WITHIN 100' UPSLOPE OF RECEIVING WATERS WHEN THE PROJECT FALLS UNDER A CONSTRUCTION STORMWATER PERMIT. WOVEN WIRE SHALL BE A MIN. 14 GAUGE WITH A 6" MAX. MESH OPENING.
2. FILTER CLOTH SHALL BE EITHER FILTER X, MIRAFI100X, STABILINKA T140N OR APPROVED EQUIVALENT.
3. POST SPACING FOR WIRE-BACKED FENCE SHALL BE 10' MAXIMUM. FOR FILTER-CLOTH FENCE, WHEN ELONGATION IS >50%, POST SPACING SHALL NOT EXCEED 4' AND WHEN ELONGATION IS <50%, POST SPACING SHALL NOT EXCEED 6'.
4. WOVEN WIRE FENCE IS TO BE FASTENED SECURELY TO FENCE POSTS WITH WIRE TIES. FILTER CLOTH IS TO BE FASTENED SECURELY TO WOVEN WIRE FENCE WITH TIES SPACED EVERY 24" AT TOP AND MID SECTION.
5. WHEN TWO SECTIONS OF FILTER CLOTH ADJOIN EACH OTHER THEY SHALL BE OVER-LAPPED BY 6" AND FOLDED.
6. MAINTENANCE SHALL BE PERFORMED AS NEEDED AND MATERIAL REMOVED WHEN SEDIMENT REACHES HALF OF FABRIC HEIGHT.

ADAPTED FROM DETAILS PROVIDED BY: NEW YORK STATE DEC
ORIGINALLY DEVELOPED BY USDA-NRCS
VERMONT DEPARTMENT OF ENVIRONMENTAL CONSERVATION

SILT FENCE

NOTES:
REFER TO "THE VERMONT STANDARDS & SPECIFICATIONS FOR EROSION PREVENTION & SEDIMENT CONTROL -2006- "FROM THE VT AGENCY OF NATURAL RESOURCES FOR ADDITIONAL GUIDANCE.

THIS WORK SHALL BE PERFORMED IN ACCORDANCE WITH SECTION 649 AND AS SHOWN IN THE PLANS FOR GEOTEXTILE FOR SILT FENCE (PAY ITEM 649.51) ~~OR GEOTEXTILE FOR SILT FENCE, WOVEN WIRE REINFORCED (PAY ITEM 649.515).~~

REVISIONS	
MARCH 21, 2008	WHF
DECEMBER 11, 2008	WHF
JANUARY 13, 2009	WHF

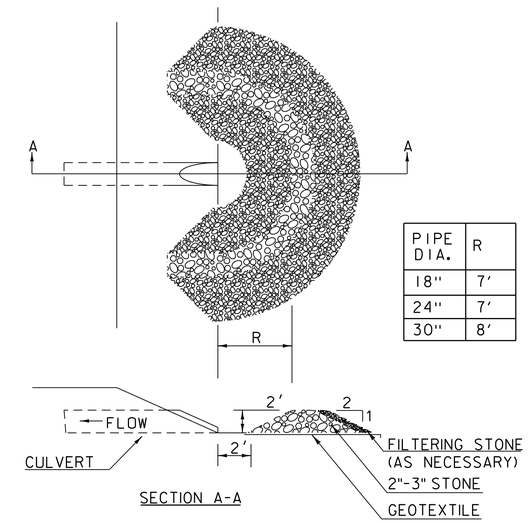

PIPE DIA.	R
18"	7'
24"	7'
30"	8'

SYMBOL
NOT TO SCALE

CONSTRUCTION SPECIFICATIONS

1. USE 2" TO 3" STONE. FILTERING STONE SHALL BE 3/4".
2. PLACE STONE OVER GEOTEXTILE.
3. ONCE THE AREAS UPSTREAM FROM THE CHECK DAM ARE STABILIZED WITH VEGETATION, THE SEDIMENT TRAPPED BEHIND THE DAM SHALL BE DISPOSED OF IN AN APPROVED WASTE AREA.
4. THE CHECK DAM(S) SHALL BE FLATTENED AND GRADED IN A MANNER WHICH PROTECTS THE AREA FROM EROSION AND CHANNEL BLOCKAGE . (GEOTEXTILE MUST BE REMOVED).
5. THE GEOTEXTILE MUST BE DISPOSED OF APPROPRIATELY.
6. THE AREA CONTRIBUTING TO THE CHECK DAM SHALL NOT EXCEED 4 ACRES.

ADAPTED FROM DETAILS PROVIDED BY: ILLINOIS USDA-NRCS
ORIGINALLY DEVELOPED BY USDA-NRCS

PIPE INLET PROTECTION

THIS WORK SHALL BE PERFORMED IN ACCORDANCE WITH SECTION 653 FOR INLET PROTECTION DEVICE, TYPE I(PAY ITEM 653.40).

REVISIONS	
MARCH 6, 2008	WHF
JANUARY 13, 2009	WHF

vhb

PROJECT NAME: ST. ALBANS	
PROJECT NUMBER: HPP 8000(17)	
FILE NAME: 57414_EPSC-DET.dgn	PLOT DATE: 3/4/2016
PROJECT LEADER: J. D. SALADINO	DRAWN BY: C. J. HAKEY
DESIGNED BY: M. KEENE	CHECKED BY: M. J. SERVETAS
EPSC DETAILS (SHEET 1 OF 3)	SHEET 129 OF 230

SYMBOL

NOT TO SCALE

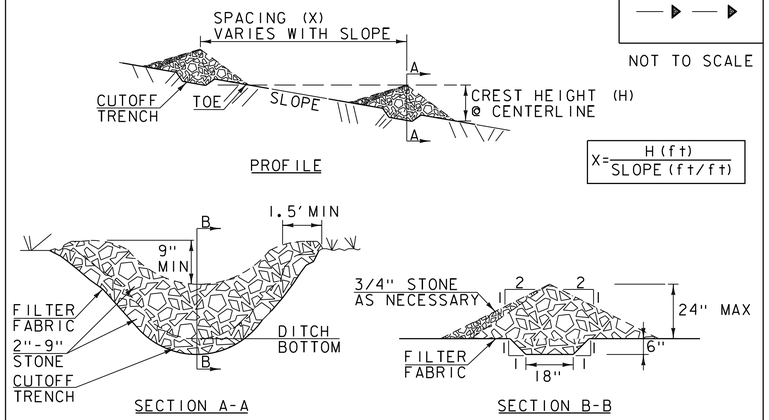

CONSTRUCTION SPECIFICATIONS

1. STONE WILL BE PLACED ON A FILTER FABRIC FOUNDATION.
2. CHECK DAMS SHALL BE SPACED SO THAT THE ELEVATION OF THE CREST OF THE DOWNSTREAM DAM IS AT THE SAME ELEVATION AS THE TOE OF THE UPSTREAM DAM.
3. 3/4" FILTERING STONE MAY BE ADDED TO THE FACE OF THE CHECK DAM AS NECESSARY.
4. EXTEND THE STONE A MINIMUM OF 1.5' BEYOND THE DITCH BANKS TO PREVENT CUTTING AROUND THE DAM.
5. PROTECT CHANNEL DOWNSTREAM OF THE LOWEST CHECK DAM FROM SCOUR AND EROSION WITH STONE OR LINER AS APPROPRIATE.
6. ENSURE THAT CHANNEL APPURTENANCES SUCH AS CULVERT ENTRANCES BELOW CHECK DAMS ARE NOT SUBJECT TO DAMAGE OR BLOCKAGE FROM DISPLACED STONE.
7. MAXIMUM DRAINAGE AREA 2 ACRES.

ADAPTED FROM DETAILS PROVIDED BY: NEW YORK STATE DEC
ORIGINALLY DEVELOPED BY USDA-NRCS
VERMONT DEPARTMENT OF ENVIRONMENTAL CONSERVATION

CHECK DAM

NOTES:
REFER TO "THE VERMONT STANDARDS & SPECIFICATIONS FOR EROSION PREVENTION & SEDIMENT CONTROL -2006- "FROM THE VT AGENCY OF NATURAL RESOURCES FOR ADDITIONAL GUIDANCE.

THIS WORK SHALL BE PERFORMED IN ACCORDANCE WITH SECTION 653 FOR TEMPORARY STONE CHECK DAM, TYPE I (PAY ITEM 653.25)

REVISIONS	
MARCH 21, 2008	WHF
JANUARY 8, 2009	WHF

SYMBOL

NOT TO SCALE

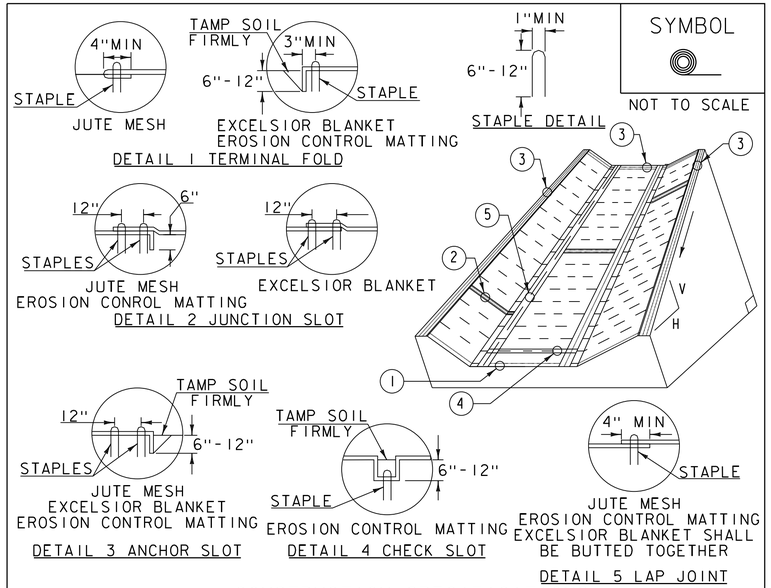

CONSTRUCTION SPECIFICATIONS

1. EROSION MATTING, CHECK SLOTS, SHALL BE SPACED IN DITCH CHANNEL SO THAT ONE OCCURS WITHIN EACH 50' ON SLOPES OF MORE THAN 4% AND LESS THAN 6%. ON SLOPES OF 6% OR MORE, THEY SHALL BE SPACED SO THAT ONE OCCURS WITHIN EACH 25'.
2. APPLY FERTILIZER, LIME SEED PRIOR TO PLACING MATTING.
3. STAPLES ARE TO BE PLACED ALTERNATELY, IN COLUMNS APPROXIMATELY 2' APART AND IN ROWS APPROXIMATELY 3' APART. APPROXIMATELY 175 STAPLES ARE REQUIRED PER 4'X225' ROLL OF MATERIAL AND 125 STAPLES ARE REQUIRED PER 4'X150' ROLL OF MATERIAL.
4. DISTURBED AREAS SHALL BE SMOOTHLY GRADED. EROSION CONTROL MATERIAL SHALL BE PLACED LOOSELY OVER GROUND SURFACE. DO NOT STRETCH.
5. ALL TERMINAL ENDS AND TRANSVERSE LAPS SHALL BE STAPLED AT APPROXIMATELY 12" INTERVALS.

ADAPTED FROM DETAILS PROVIDED BY: NEW YORK STATE DEC
ORIGINALLY DEVELOPED BY USDA-NRCS
VERMONT DEPARTMENT OF ENVIRONMENTAL CONSERVATION

ROLLED EROSION CONTROL PRODUCT (RECP) DITCH

NOTES:
REFER TO "THE VERMONT STANDARDS & SPECIFICATIONS FOR EROSION PREVENTION & SEDIMENT CONTROL -2006- "FROM THE VT AGENCY OF NATURAL RESOURCES FOR ADDITIONAL GUIDANCE.
THIS WORK SHALL BE PERFORMED IN ACCORDANCE WITH SECTION 653 AND AS SHOWN IN THE PLANS FOR TEMPORARY EROSION MATTING (PAY ITEM 653.20) ~~OR PERMANENT EROSION MATTING (PAY ITEM 653.21)~~.

REVISIONS	
MARCH 8, 2007	JMF
APRIL 16, 2007	WHF
JANUARY 13, 2009	WHF

SYMBOL

NOT TO SCALE

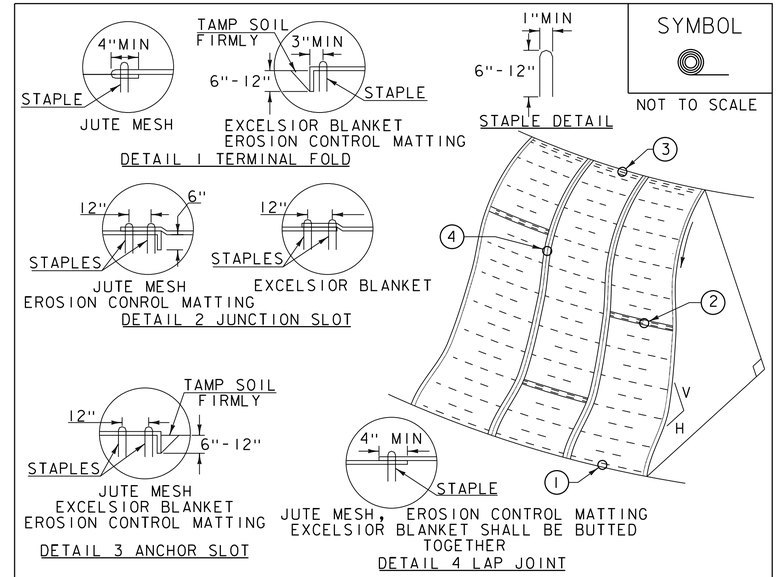

CONSTRUCTION SPECIFICATIONS

1. APPLY TO SLOPES GREATER THAN 3H:1V OR WHERE NECESSARY TO AID IN ESTABLISHING VEGETATION.
2. APPLY FERTILIZER, LIME SEED PRIOR TO PLACING MATTING.
3. STAPLES ARE TO BE PLACED ALTERNATELY, IN COLUMNS APPROXIMATELY 2' APART AND IN ROWS APPROXIMATELY 3' APART. APPROXIMATELY 175 STAPLES ARE REQUIRED PER 4'X225' ROLL OF MATERIAL AND 125 STAPLES ARE REQUIRED PER 4'X150' ROLL OF MATERIAL.
4. DISTURBED AREAS SHALL BE SMOOTHLY GRADED. EROSION CONTROL MATERIAL SHALL BE PLACED LOOSELY OVER GROUND SURFACE. DO NOT STRETCH.
5. ALL TERMINAL ENDS AND TRANSVERSE LAPS SHALL BE STAPLED AT APPROXIMATELY 12" INTERVALS.

ADAPTED FROM DETAILS PROVIDED BY: NEW YORK STATE DEC
ORIGINALLY DEVELOPED BY USDA-NRCS
VERMONT DEPARTMENT OF ENVIRONMENTAL CONSERVATION

ROLLED EROSION CONTROL PRODUCT (RECP) SIDE SLOPE

NOTES:
REFER TO "THE VERMONT STANDARDS & SPECIFICATIONS FOR EROSION PREVENTION & SEDIMENT CONTROL -2006- "FROM THE VT AGENCY OF NATURAL RESOURCES FOR ADDITIONAL GUIDANCE.
THIS WORK SHALL BE PERFORMED IN ACCORDANCE WITH SECTION 653 AND AS SHOWN IN THE PLANS FOR TEMPORARY EROSION MATTING (PAY ITEM 653.20) ~~OR PERMANENT EROSION MATTING (PAY ITEM 653.21)~~.

REVISIONS	
APRIL 16, 2007	JMF
JANUARY 13, 2009	WHF

vhb

PROJECT NAME: ST. ALBANS
PROJECT NUMBER: HPP 8000(17)

FILE NAME: 57414_EPSC-DET.dgn
PROJECT LEADER: J. D. SALADINO
DESIGNED BY: M. KEENE
EPSC DETAILS (SHEET 2 OF 3)

PLOT DATE: 3/4/2016
DRAWN BY: C. J. HAKEY
CHECKED BY: M. J. SERVETAS
SHEET 130 OF 230

SYMBOL

FR

NOT TO SCALE

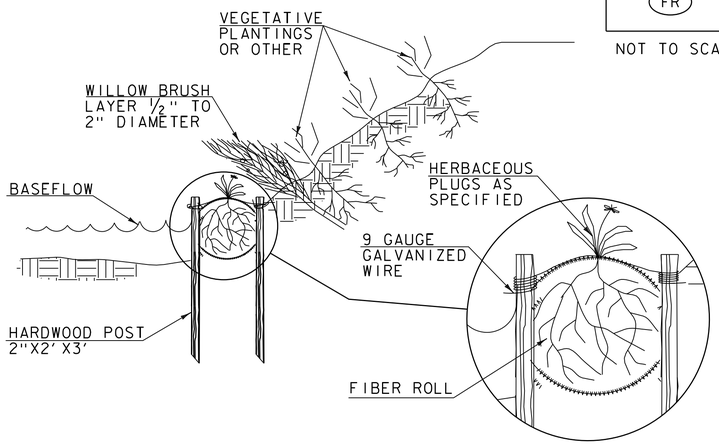

CONSTRUCTION SPECIFICATIONS

1. EXCAVATE A SHALLOW TRENCH SLIGHTLY BELOW BASEFLOW OR A 4" TRENCH ON SLOPE CONTOURS
2. PLACE THE ROLL IN THE TRENCH AND ANCHOR WITH 2"X2" POSTS PLACED ON BOTH SIDES FO THE ROLL AND SPACED LATERALLY ON 2' TO 4' CENTERS. TRIM THE TOP OF THE POSTS EVEN WITH THE EDGE OF THE ROLL, IF NECESSARY.
3. NOTCH THE POSTS AND TIE TOGETHER, ACROSS THE ROLL, WITH 9 GAUGE GALVANIZED WIRE OR 1/8" DIAMETER BRAIDED NYLON ROPE.
4. PLACE SOIL EXCAVATED FROM THE TRENCH BEHIND THE ROLL AND HAND TAMP. PLANTWITH SUITABLE HERBACEOUS OR WOODY VEGETATION AS SPECIFIED ELSEWHERE IN THE CONTRACT DOCUMENTS. VEGETATION SHALL BE PLACED IMMEDIATELY ADJACENT TO THE ROLL TO PROMOTE ROOT GROWTH INTO THE FIBER. HERBACEOUS VEGETATION, IF SPECIFIED, SHALL BE PLANTED INTO THE FIBER ROLL.

ADAPTED FROM DETAILS PROVIDED BY: NEW YORK STATE DEC
ORIGINALLY DEVELOPED BY USDA-NRCS
VERMONT DEPARTMENT OF ENVIRONMENTAL CONSERVATION

FIBER ROLL (EROSION LOG)

NOTES:
REFER TO "THE VERMONT STANDARDS & SPECIFICATIONS FOR EROSION PREVENTION & SEDIMENT CONTROL -2006- "FROM THE VT AGENCY OF NATURAL RESOURCES FOR ADDITIONAL GUIDANCE.

THIS WORK SHALL BE PERFORMED IN ACCORDANCE WITH SECTION 653 FOR EROSION LOG (PAY ITEM 653.60)

REVISIONS	
MARCH 21, 2008	WHF
JANUARY 13, 2009	WHF

SYMBOL

NOT TO SCALE

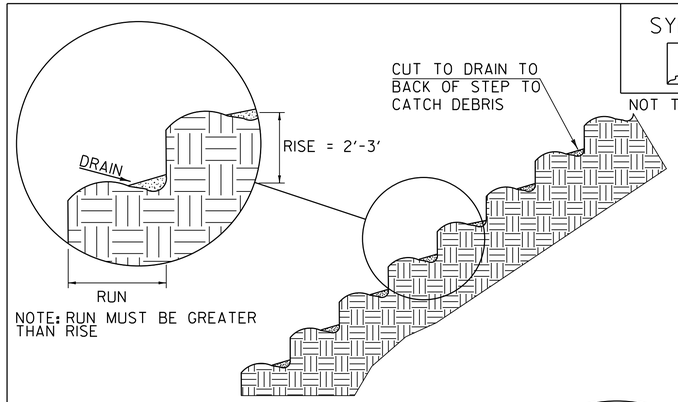

NOTE: RUN MUST BE GREATER THAN RISE

STAIR STEPPING CUT SLOPES

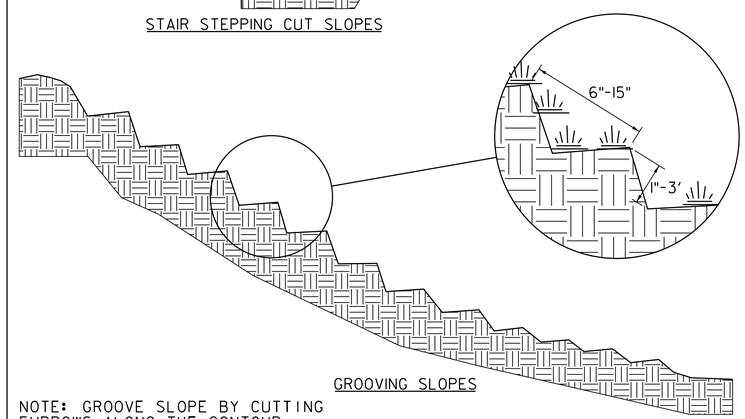

GROOVING SLOPES

NOTE: GROOVE SLOPE BY CUTTING FURROWS ALONG THE CONTOUR. IRREGULARITIES IN THE SOIL SURFACE CATCH RAINWATER AND RETAIN LIME, FERTILIZER AND SEED.

ADAPTED FROM DETAILS PROVIDED BY: NEW YORK STATE DEC
ORIGINALLY DEVELOPED BY USDA-NRCS
VERMONT DEPARTMENT OF ENVIRONMENTAL CONSERVATION

SURFACE ROUGHENING

NOTES:
REFER TO "THE VERMONT STANDARDS & SPECIFICATIONS FOR EROSION PREVENTION & SEDIMENT CONTROL -2006- "FROM THE VT AGENCY OF NATURAL RESOURCES FOR ADDITIONAL GUIDANCE.

THIS WORK SHALL BE CONSIDERED INCIDENTAL TO THE CONTRACT

REVISIONS	
APRIL 1, 2008	WHF
JANUARY 13, 2009	WHF

VAOT RURAL AREA MIX

	LBS/AC				
% WEIGHT	BROADCAST	HYDROSEED	NAME	GERM %	PURITY %
37.5%	22.5	45	CREEPING RED FESCUE	85%	98%
37.5%	22.5	45	TALL FESCUE	90%	95%
5.0%	3	6	RED TOP	90%	95%
15.0%	9	18	BIRDSFOOT TREFOIL	85%	98%
5.0%	3	6	ANNUAL RYE GRASS	85%	95%
100%	60	120			

VAOT URBAN AREA MIX

	LBS/AC				
% WEIGHT	BROADCAST	HYDROSEED	NAME	GERM %	PURITY %
42.5%	34	68	CREEPING RED FESCUE	85%	98%
10.0%	8	16	PERENNIAL RYE GRASS	90%	95%
42.5%	34	68	KENTUCKY BLUE GRASS	85%	85%
5.0%	4	8	ANNUAL RYE GRASS	85%	95%
100%	80	160			

SOIL AMENDMENT GUIDANCE

FERTILIZER		LIME	
BROADCAST	HYDROSEED	BROADCAST	HYDROSEED
10-20-10	*FOLLOW*	PELLETIZED	*FOLLOW*
500 LBS/AC	*MANUFACTURER*	2 TONS/AC	*MANUFACTURER*

CONSTRUCTION GUIDANCE

1. RURAL SEED MIX: USE AS INDICATED IN THE PLANS AND/OR FOR ALL ESTABLISHED UPLAND (NON WETLAND) AREAS DISTURBED BY THE CONTRACTOR.
2. URBAN SEED MIX: USE AS INDICATED IN THE PLANS AND/OR FOR ALL ESTABLISHED LAWN AREAS DISTURBED BY THE CONTRACTOR.
3. ALL SEED MIXTURES: SHALL NOT HAVE A WEED CONTENT EXCEEDING 0.40% BY WEIGHT AND SHALL BE FREE OF ALL NOXIOUS SEED.
4. FERTILIZER AND LIMESTONE: SHALL FOLLOW RATES SHOWN ON PLAN OR AS DIRECTED BY THE ENGINEER
5. HAY MULCH: TO BE PLACED ON EARTH SLOPES AT THE RATE OF 2 TONS/ACRE, ACHIEVE 90% GROUND COVER OR AS DIRECTED BY THE ENGINEER.
6. TOPSOIL: TO BE USED WITH SEED AS INDICATED ON THE PLANS, OR AS DIRECTED BY THE ENGINEER.
7. HYDROSEEDING: ALTHOUGH GUIDANCE IS GIVEN ABOVE THE SITE CONDITIONS AND THE TYPE OF HYDROSEED WILL ULTIMATELY DICTATE THE AMOUNTS AND TYPES OF SOIL AMENDMENTS TO BE APPLIED
8. TURF ESTABLISHMENT: PLACING SEED, FERTILIZER, LIME AND MULCH PRIOR TO SEPTEMBER 15 AND AFTER APRIL 15 CAN BETTER ENSURE A VIGOROUS GROWTH OF GRASS.

ADAPTED FROM VTRANS TECHNICAL LANDSCAPE MANUAL FOR ROADWAYS AND TRANSPORTATION FACILITIES

TURF ESTABLISHMENT

REVISIONS	
JUNE 23, 2009	WHF
JANUARY 15, 2010	WHF
FEBRUARY 16, 2011	WHF

vhb

PROJECT NAME: ST. ALBANS
PROJECT NUMBER: HPP 8000(17)

FILE NAME: 57414_EPSC-DET.dgn
PROJECT LEADER: J. D. SALADINO
DESIGNED BY: M. KEENE
EPSC DETAILS (SHEET 3 OF 3)

PLOT DATE: 3/4/2016
DRAWN BY: C. J. HAKEY
CHECKED BY: M. J. SERVETAS
SHEET 131 OF 230

MATCHLINE STA. 101+85

STATION 100+22
BEGIN PROJECT
HPP 8000(17)

STA. 899+00
BEGIN APPROACH

Approximate Exist. R.O.W.

CONSTRUCTION
ENTRANCE

SOUTH MAIN ST. (ROUTE 7)

899+00 900+00 901+00 902+00 903+00 904+00

101 102

101+00

3002+00

3001+00

3000+00

STA. 904+25
END APPROACH

LEDGE
OUTCROP

INTERSTATE ACCESS ROUTE

STA. 3000+50
BEGIN APPROACH

VT STATE PLANE GRID

N

0 20 40
SCALE IN FEET

vhb

PROJECT NAME: ST. ALBANS	
PROJECT NUMBER: HPP 8000(17)	
FILE NAME: 57414_BDR_ero.dgn	PLOT DATE: 3/4/2016
PROJECT LEADER: M. A. COLGAN	DRAWN BY: A.J. GOUDREAU
DESIGNED BY: D. M. PECK	CHECKED BY: M.C. SCOTT
EPSC PLAN (1 OF 18)	SHEET 132 OF 230

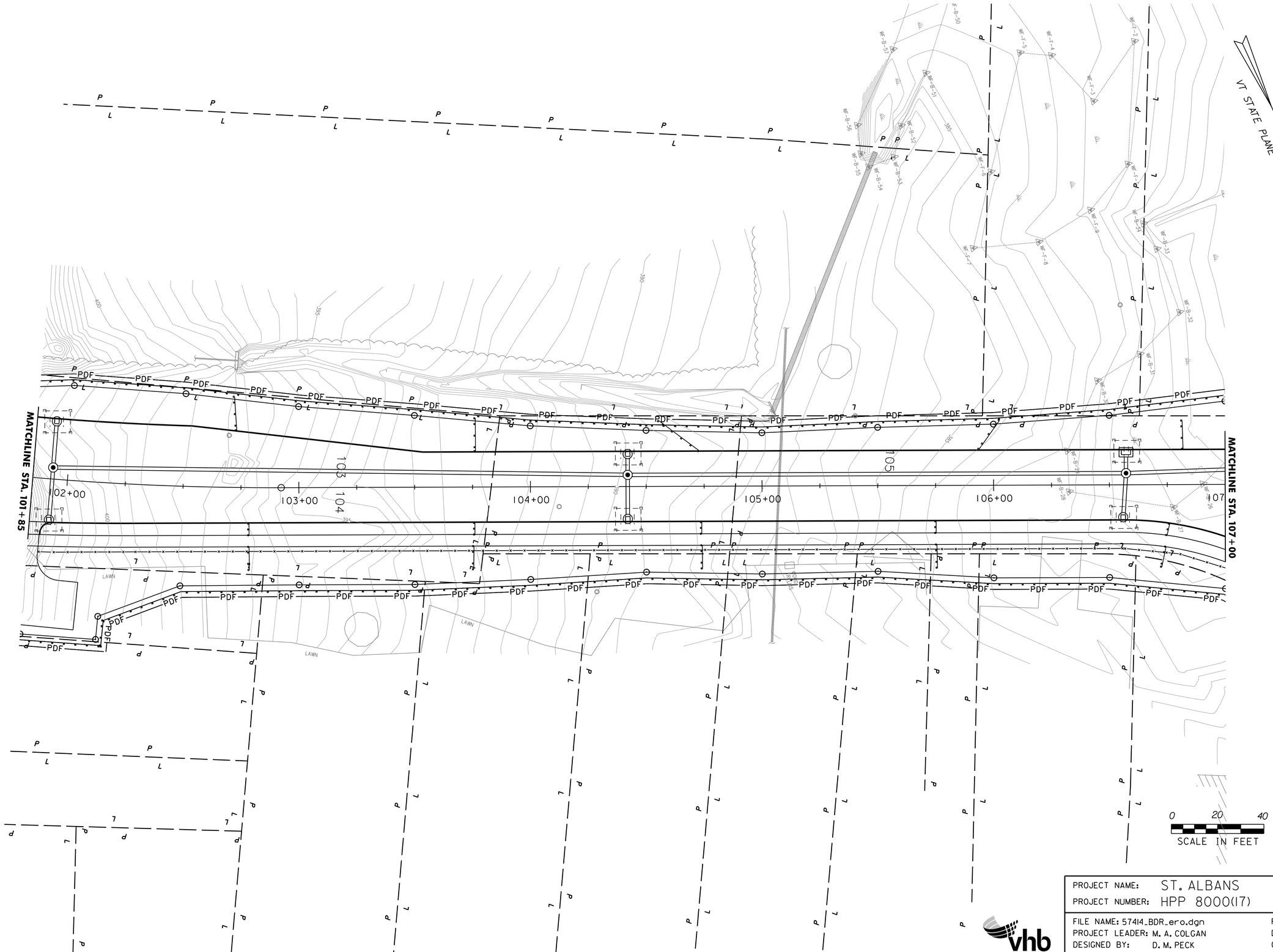

PROJECT NAME: ST. ALBANS
PROJECT NUMBER: HPP 8000(17)

FILE NAME: 57414_BDR_ero.dgn
PROJECT LEADER: M. A. COLGAN
DESIGNED BY: D. M. PECK
EPSC PLAN (2 OF 18)

PLOT DATE: 3/4/2016
DRAWN BY: A.J. GOUDREAU
CHECKED BY: M.C. SCOTT
SHEET 133 OF 230

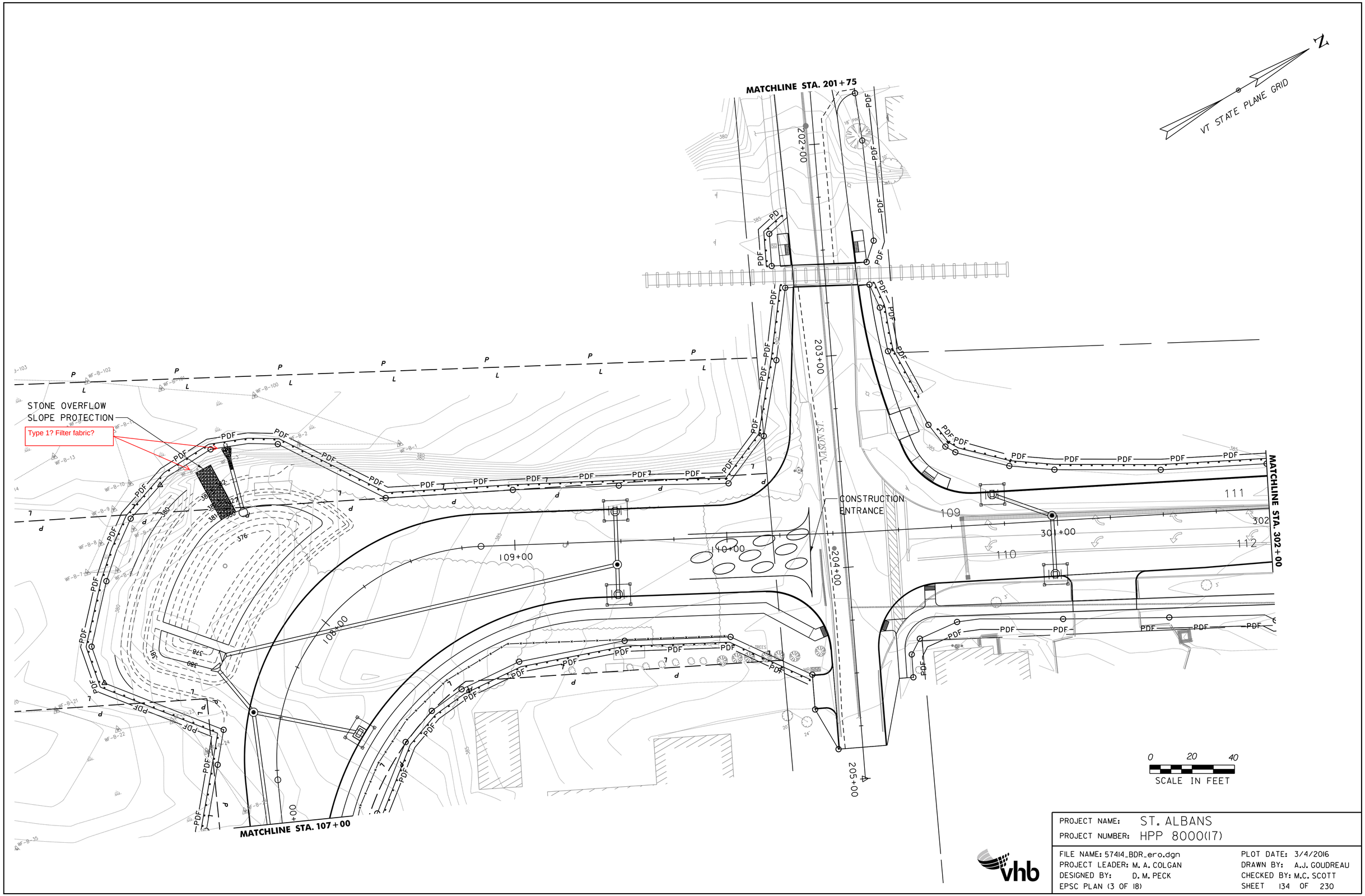

PROJECT NAME:	ST. ALBANS
PROJECT NUMBER:	HPP 8000(17)

FILE NAME: 57414_BDR_ero.dgn	PLOT DATE: 3/4/2016
PROJECT LEADER: M. A. COLGAN	DRAWN BY: A.J. GOUDREAU
DESIGNED BY: D. M. PECK	CHECKED BY: M.C. SCOTT
EPSC PLAN (3 OF 18)	SHEET 134 OF 230

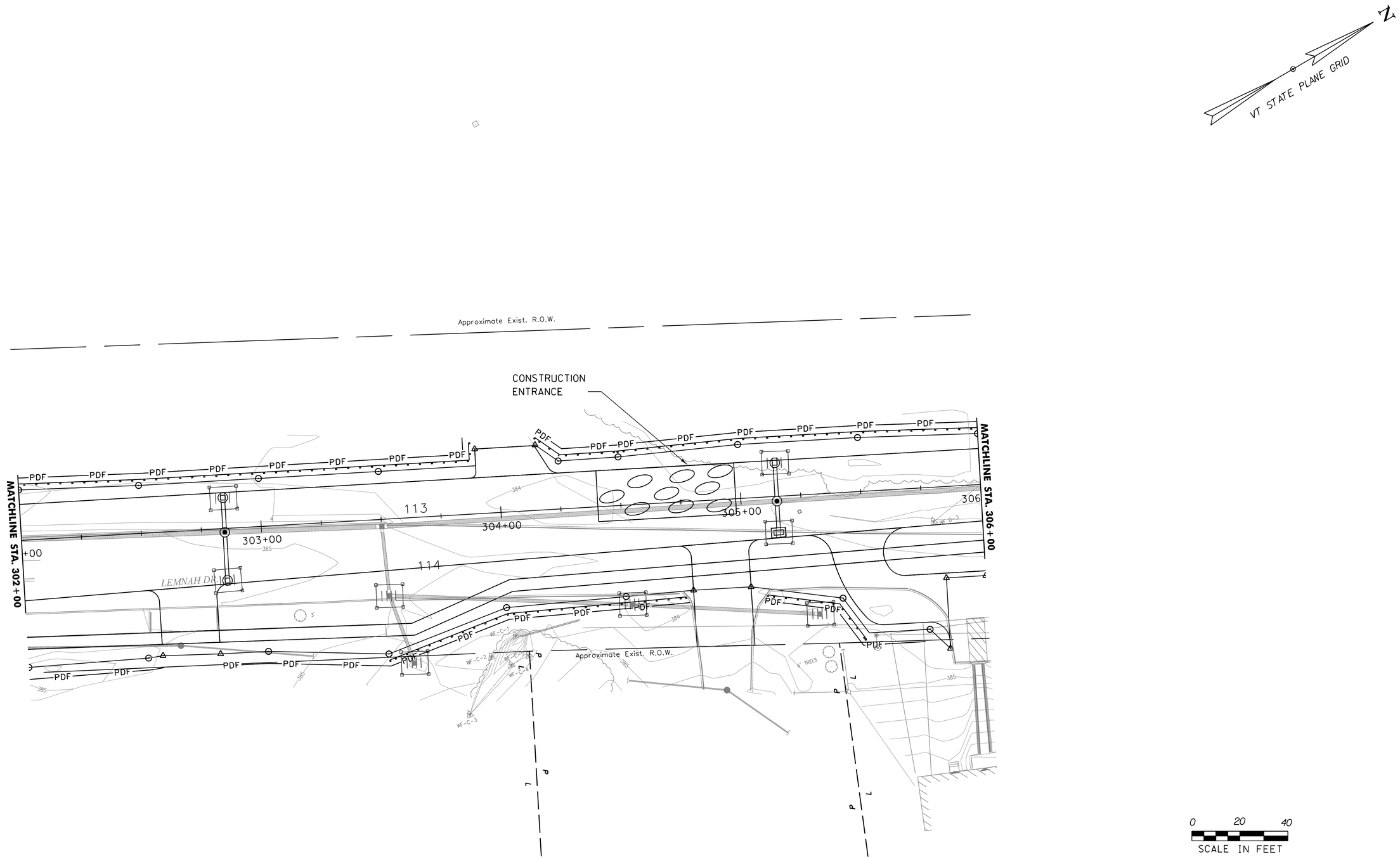

PROJECT NAME:	ST. ALBANS
PROJECT NUMBER:	HPP 8000(17)

FILE NAME: 57414_BDR_ero.dgn	PLOT DATE: 3/4/2016
PROJECT LEADER: M. A. COLGAN	DRAWN BY: A.J. GOUDREAU
DESIGNED BY: D. M. PECK	CHECKED BY: M.C. SCOTT
EPSC PLAN (4 OF 18)	SHEET 135 OF 230

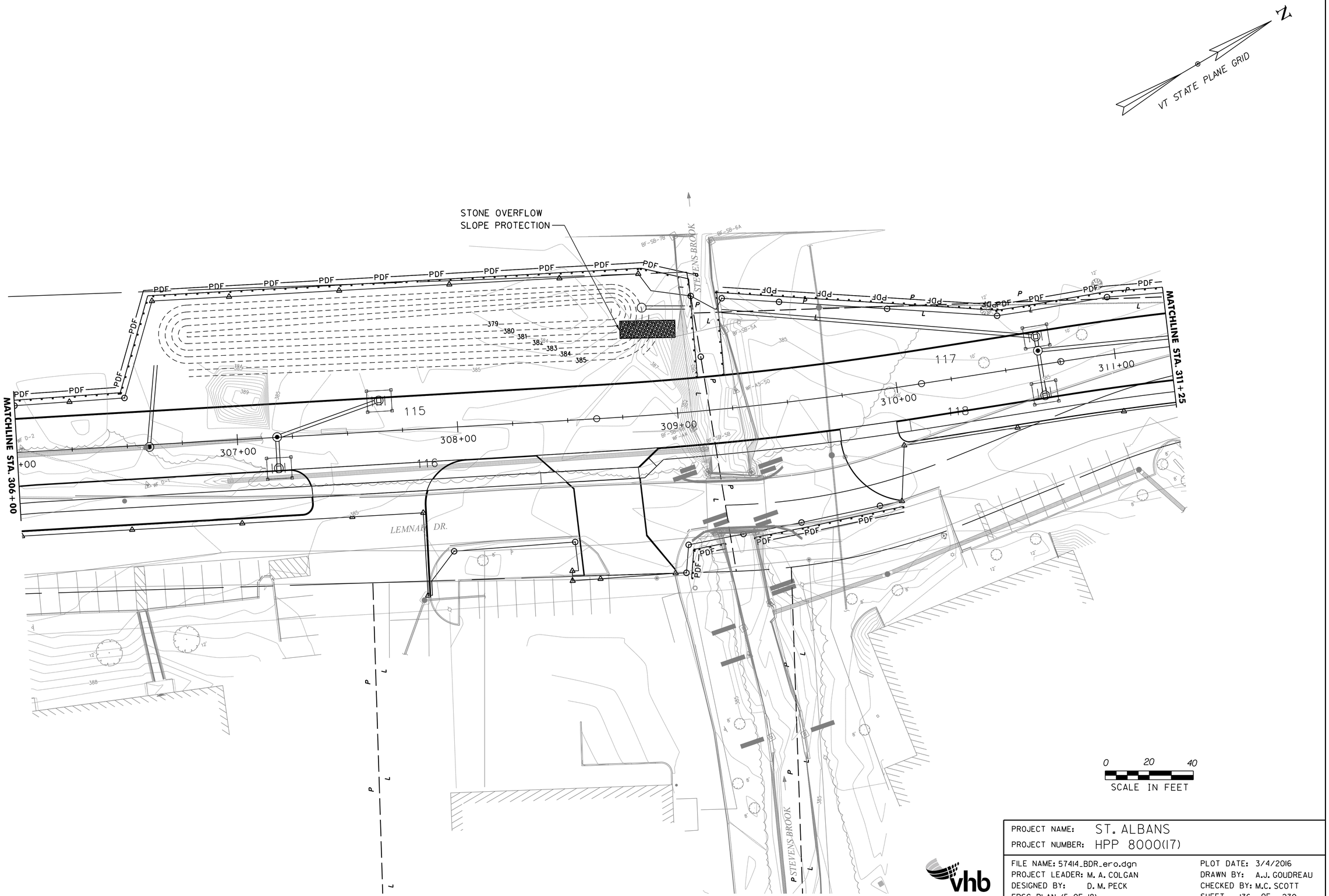

PROJECT NAME: ST. ALBANS	
PROJECT NUMBER: HPP 8000(17)	
FILE NAME: 57414_BDR_ero.dgn	PLOT DATE: 3/4/2016
PROJECT LEADER: M. A. COLGAN	DRAWN BY: A.J. GOUDREAU
DESIGNED BY: D. M. PECK	CHECKED BY: M.C. SCOTT
EPSC PLAN (5 OF 18)	SHEET 136 OF 230

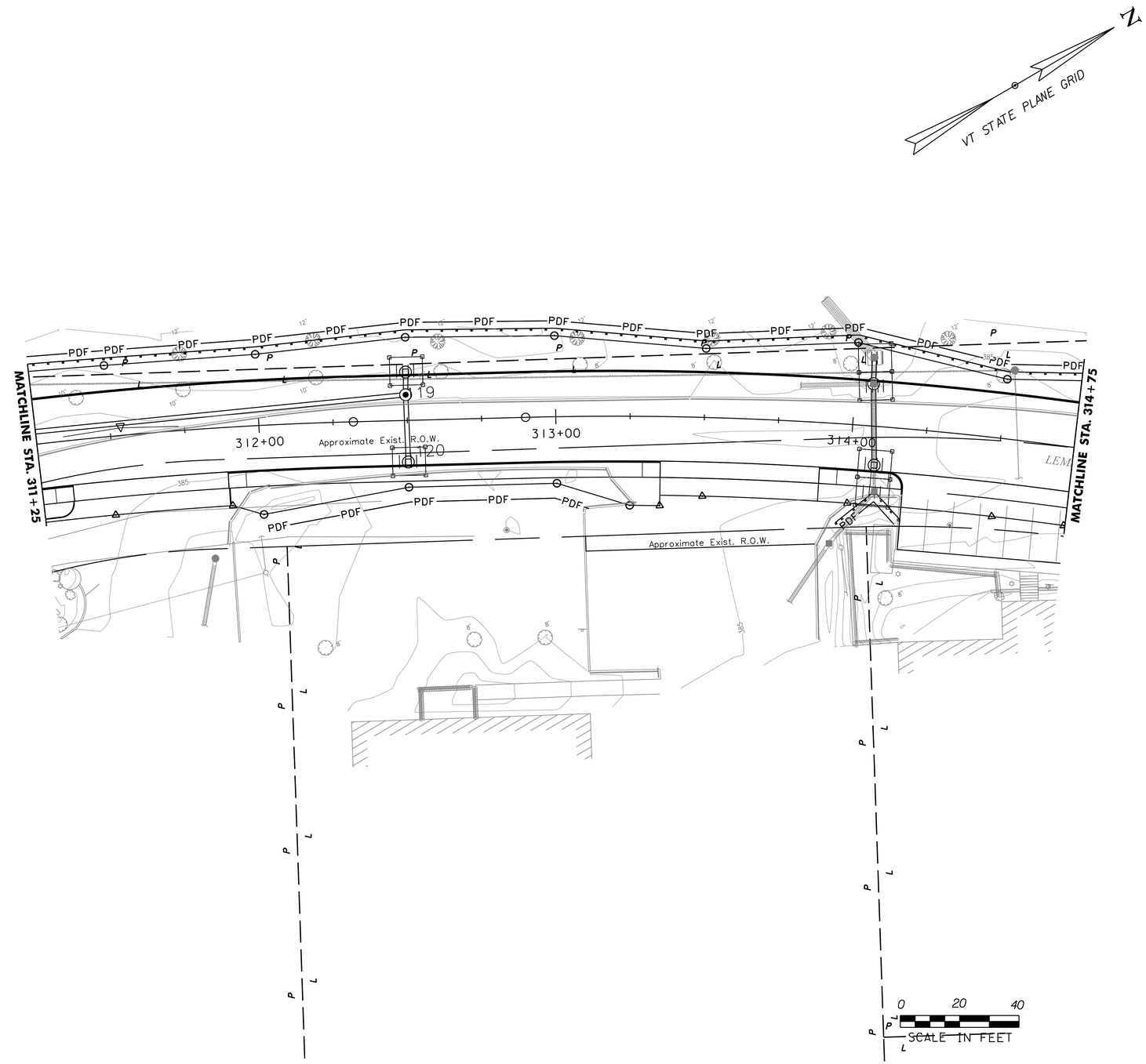

PROJECT NAME:	ST. ALBANS
PROJECT NUMBER:	HPP 8000(17)

FILE NAME: 57414_BDR_ero.dgn	PLOT DATE: 3/4/2016
PROJECT LEADER: M. A. COLGAN	DRAWN BY: A.J. GOUDREAU
DESIGNED BY: D. M. PECK	CHECKED BY: M.C. SCOTT
EPSC PLAN (6 OF 18)	SHEET 137 OF 230

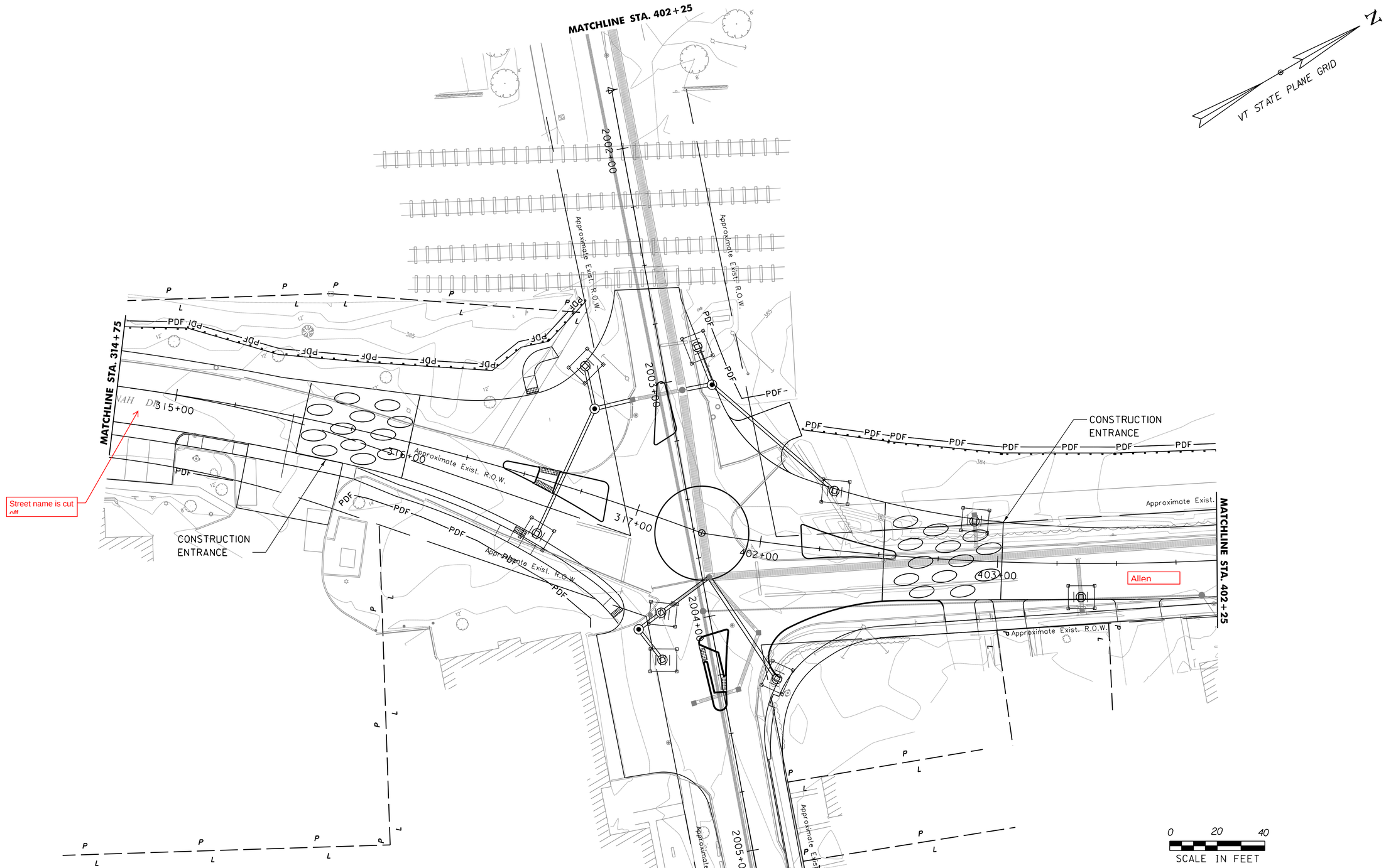

PROJECT NAME:	ST. ALBANS
PROJECT NUMBER:	HPP 8000(17)

FILE NAME: 57414_BDR_ero.dgn	PLOT DATE: 3/4/2016
PROJECT LEADER: M. A. COLGAN	DRAWN BY: A.J. GOUDREAU
DESIGNED BY: D. M. PECK	CHECKED BY: M.C. SCOTT
EPSC PLAN (7 OF 18)	SHEET 138 OF 230

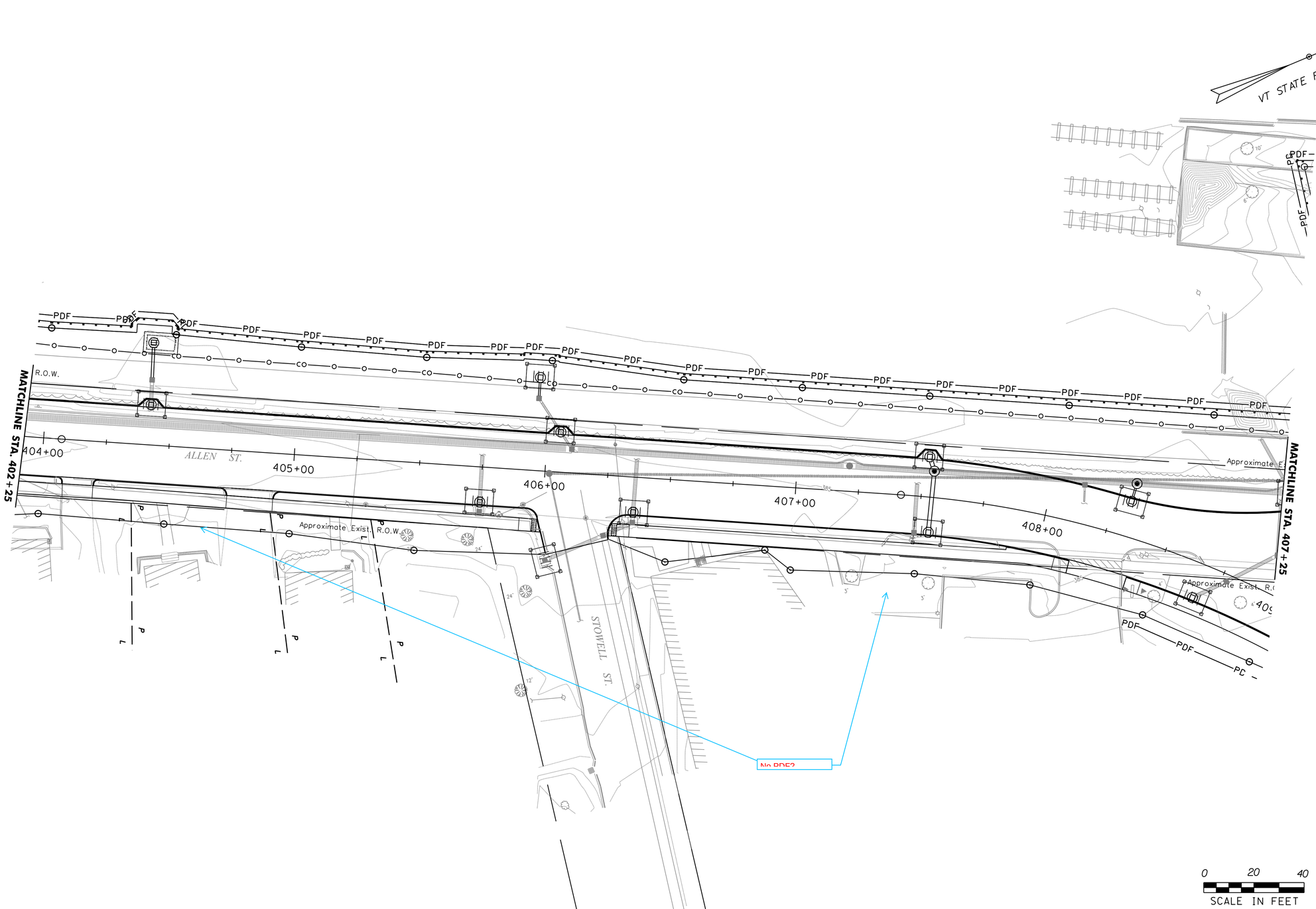

PROJECT NAME:	ST. ALBANS
PROJECT NUMBER:	HPP 8000(17)

FILE NAME: 57414_BDR_ero.dgn	PLOT DATE: 3/4/2016
PROJECT LEADER: M. A. COLGAN	DRAWN BY: A.J. GOUDREAU
DESIGNED BY: D. M. PECK	CHECKED BY: M.C. SCOTT
EPSC PLAN (8 OF 18)	SHEET 139 OF 230

VHB 57414.00

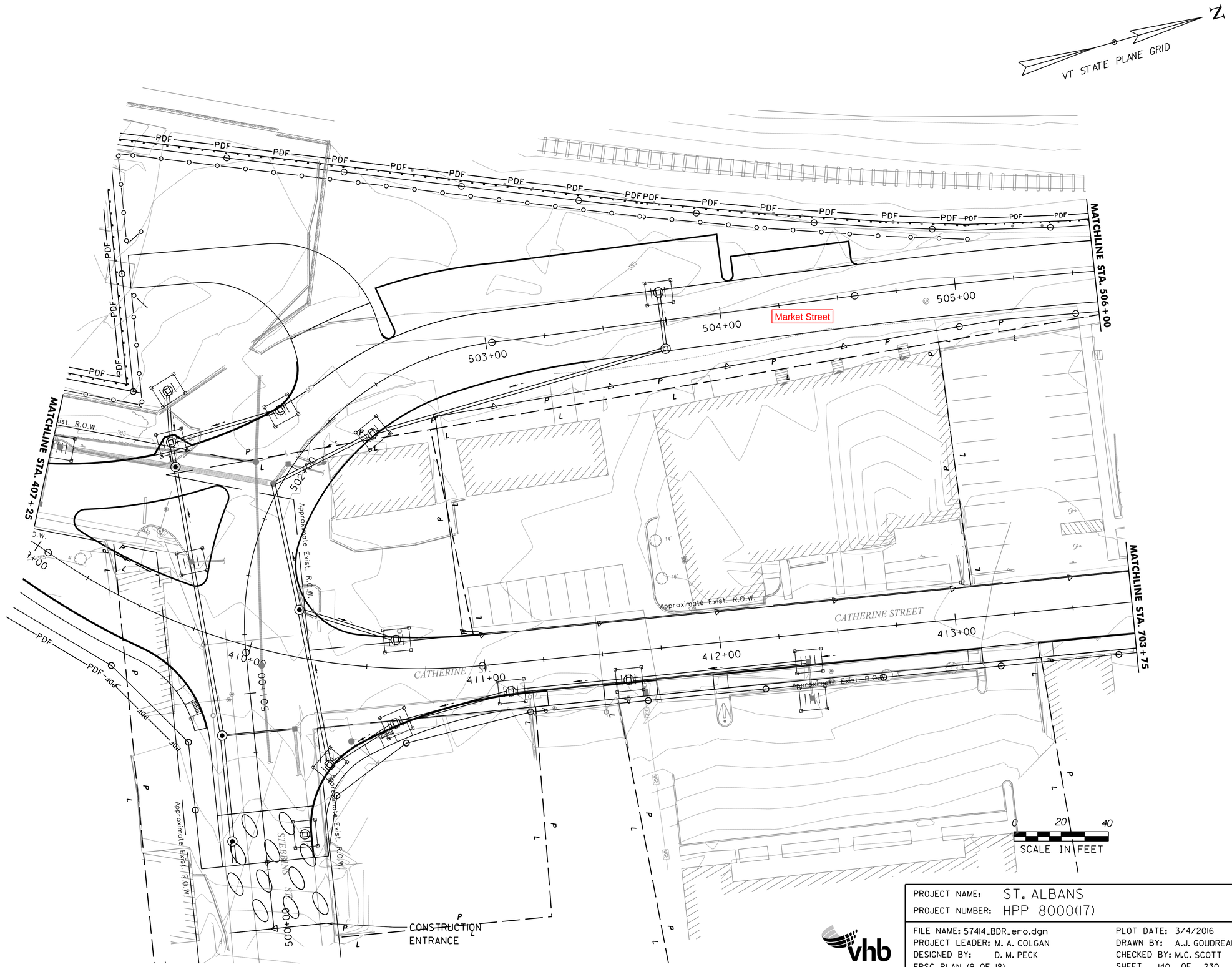

PROJECT NAME: ST. ALBANS	
PROJECT NUMBER: HPP 8000(17)	
FILE NAME: 57414_BDR_ero.dgn	PLOT DATE: 3/4/2016
PROJECT LEADER: M. A. COLGAN	DRAWN BY: A.J. GOUDREAU
DESIGNED BY: D. M. PECK	CHECKED BY: M.C. SCOTT
EPSC PLAN (9 OF 18)	SHEET 140 OF 230

VHB 57414.00

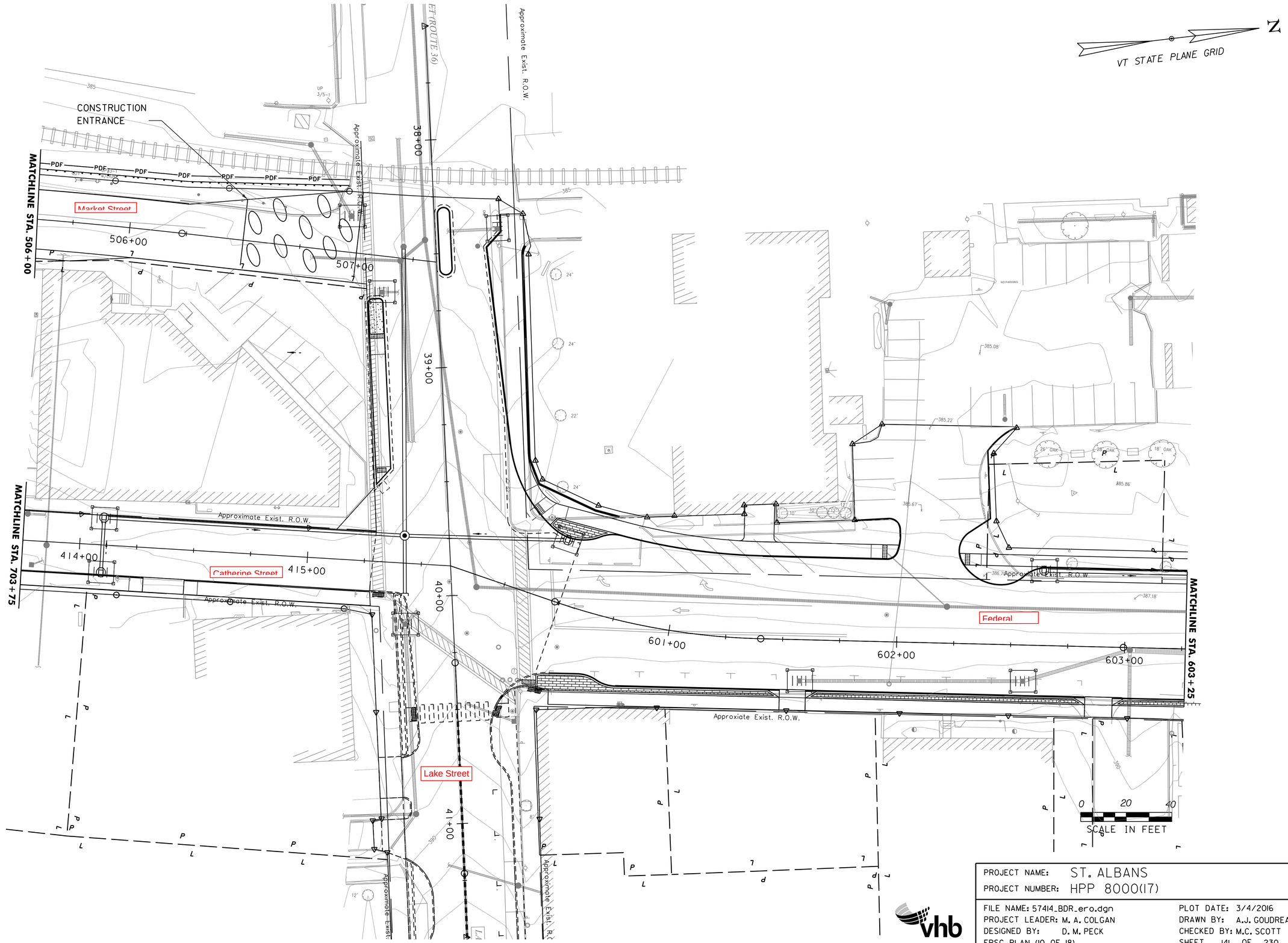

PROJECT NAME: ST. ALBANS
PROJECT NUMBER: HPP 8000(17)

FILE NAME: 57414_BDR_ero.dgn
PROJECT LEADER: M. A. COLGAN
DESIGNED BY: D. M. PECK
EPSC PLAN (10 OF 18)

PLOT DATE: 3/4/2016
DRAWN BY: A.J. GOUDREAU
CHECKED BY: M.C. SCOTT
SHEET 141 OF 230

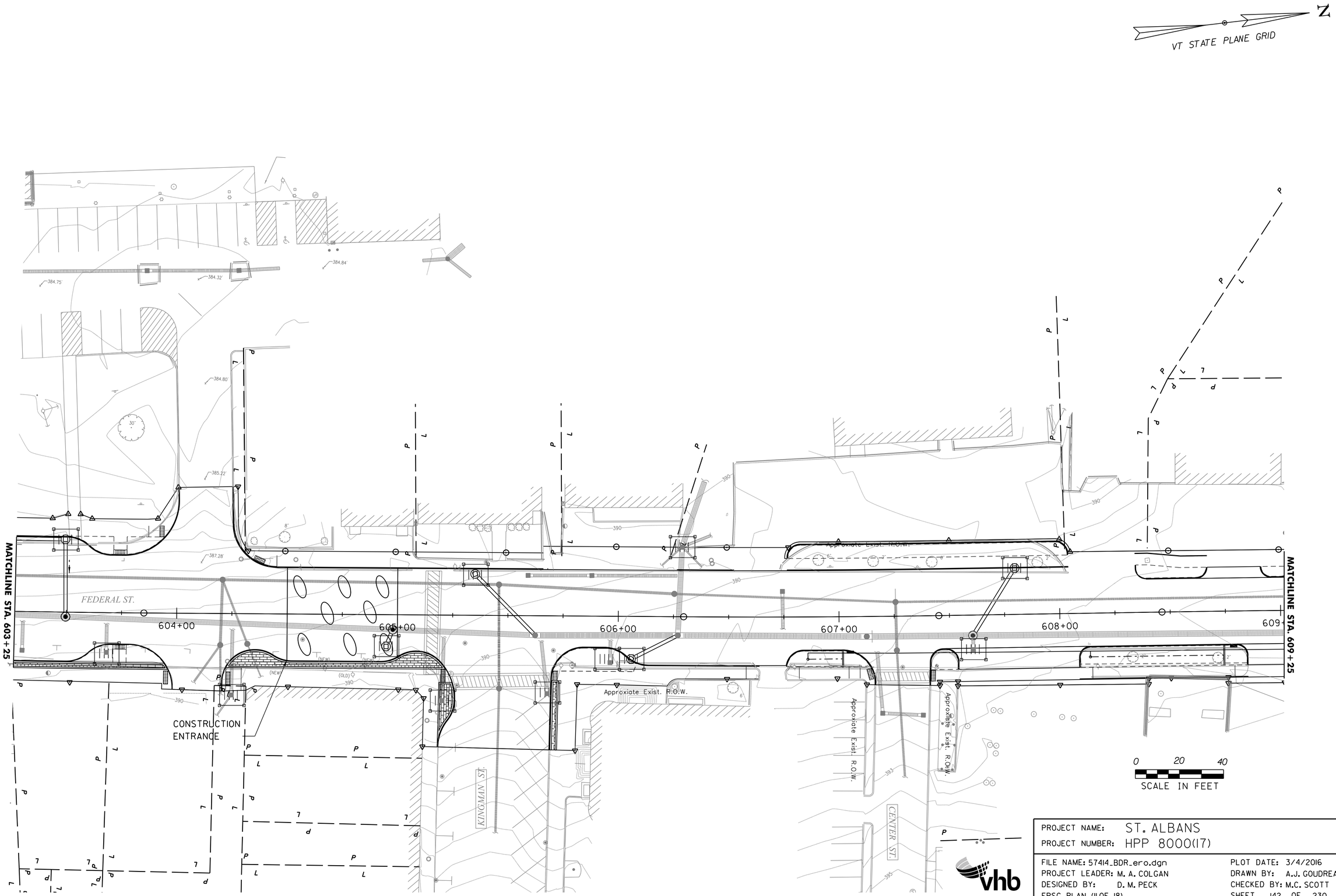

PROJECT NAME:	ST. ALBANS
PROJECT NUMBER:	HPP 8000(17)

FILE NAME: 57414_BDR_ero.dgn	PLOT DATE: 3/4/2016
PROJECT LEADER: M. A. COLGAN	DRAWN BY: A.J. GOUDREAU
DESIGNED BY: D. M. PECK	CHECKED BY: M.C. SCOTT
EPSC PLAN (11 OF 18)	SHEET 142 OF 230

VHB 57414.00

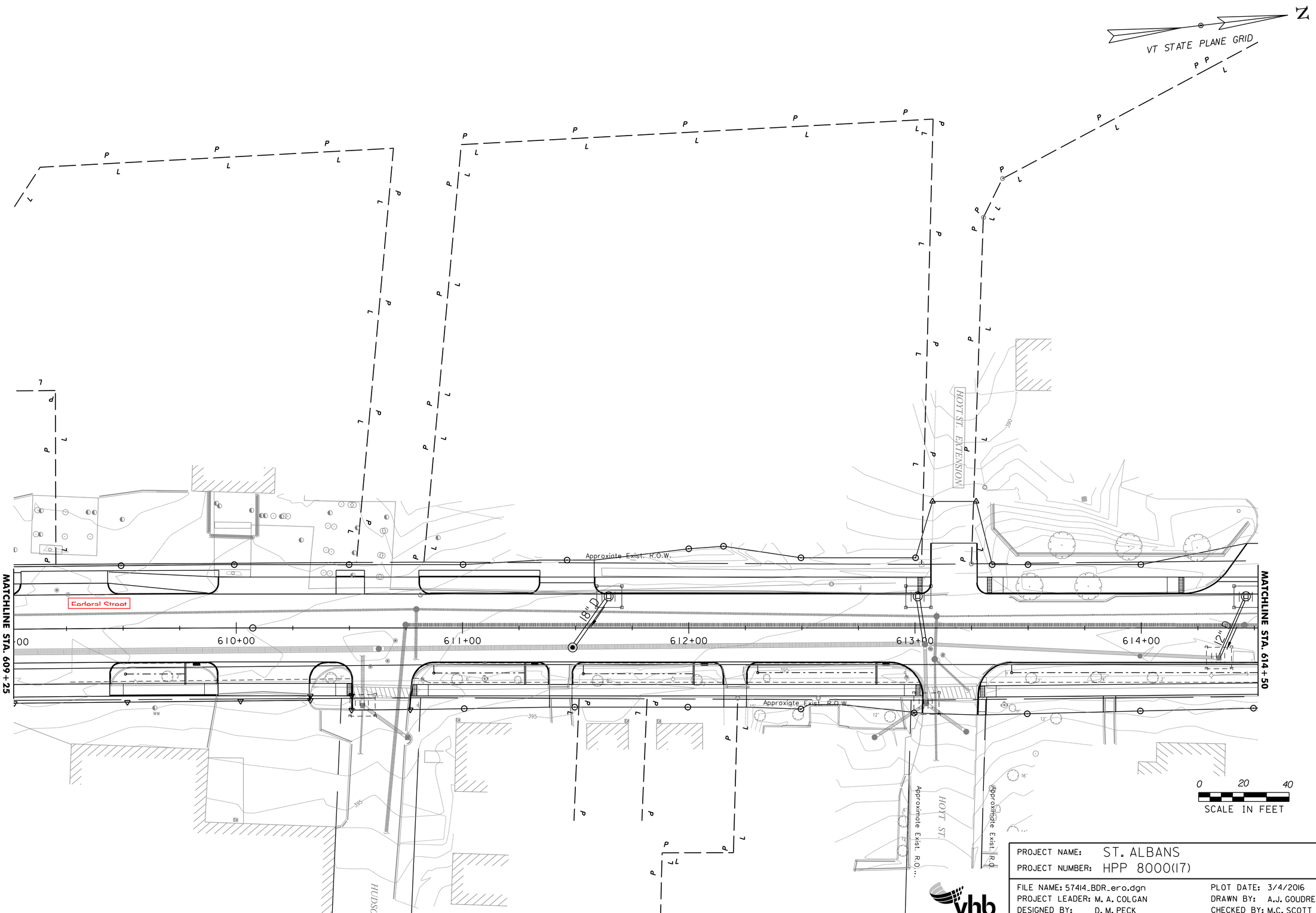

PROJECT NAME: ST. ALBANS
PROJECT NUMBER: HPP 8000(17)

FILE NAME: 57414_BDR_ero.dgn
PROJECT LEADER: M. A. COLGAN
DESIGNED BY: D. M. PECK
EPSC PLAN (12 OF 18)

PLOT DATE: 3/4/2016
DRAWN BY: A.J. GOUDREAU
CHECKED BY: M.C. SCOTT
SHEET 143 OF 230

VHB 57414.00

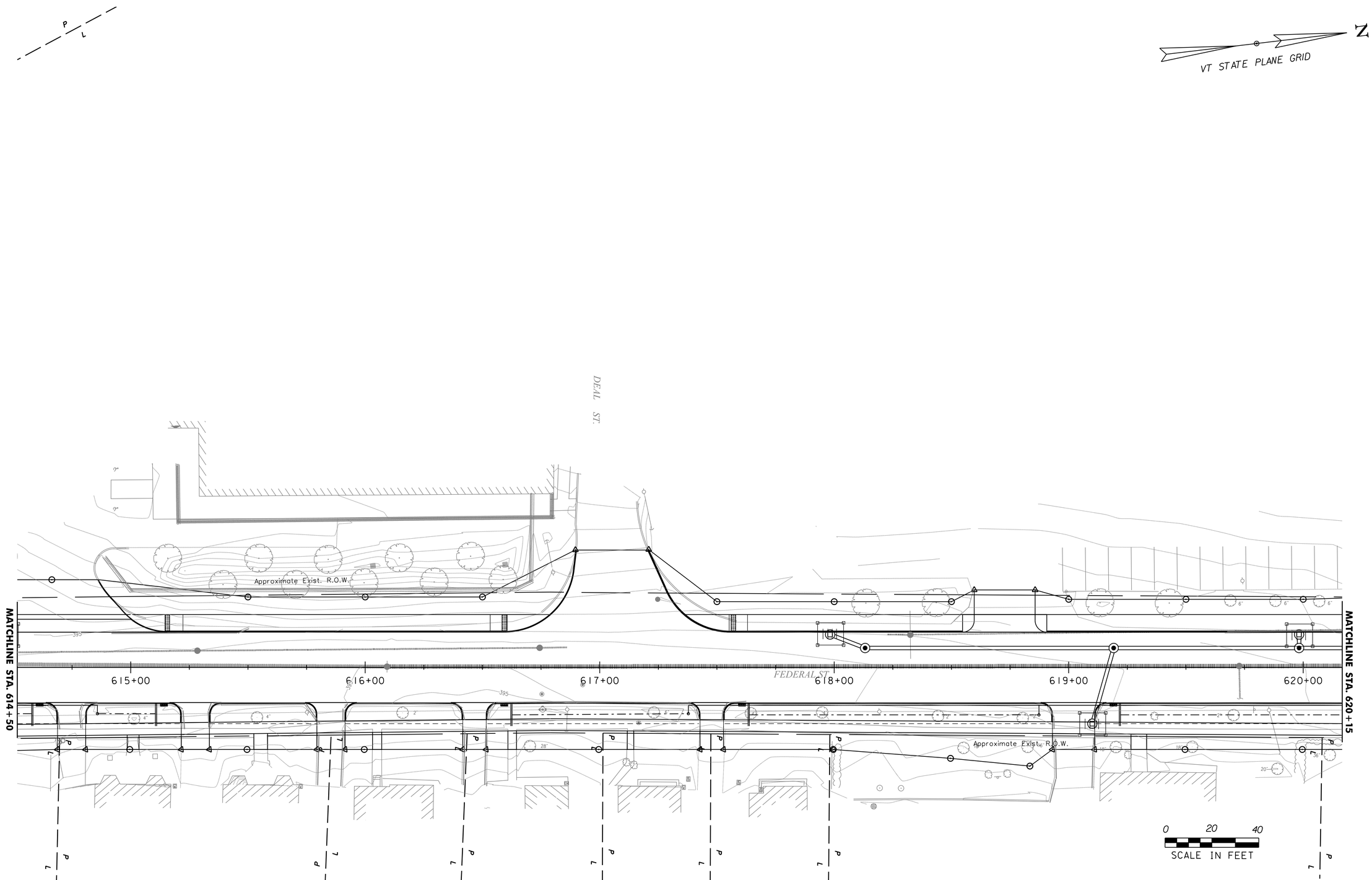

PROJECT NAME:	ST. ALBANS
PROJECT NUMBER:	HPP 8000(17)

FILE NAME: 57414_BDR_ero.dgn	PLOT DATE: 3/4/2016
PROJECT LEADER: M. A. COLGAN	DRAWN BY: A.J. GOUDREAU
DESIGNED BY: D. M. PECK	CHECKED BY: M.C. SCOTT
EPSC PLAN (13 OF 18)	SHEET 144 OF 230

VHB 57414.00

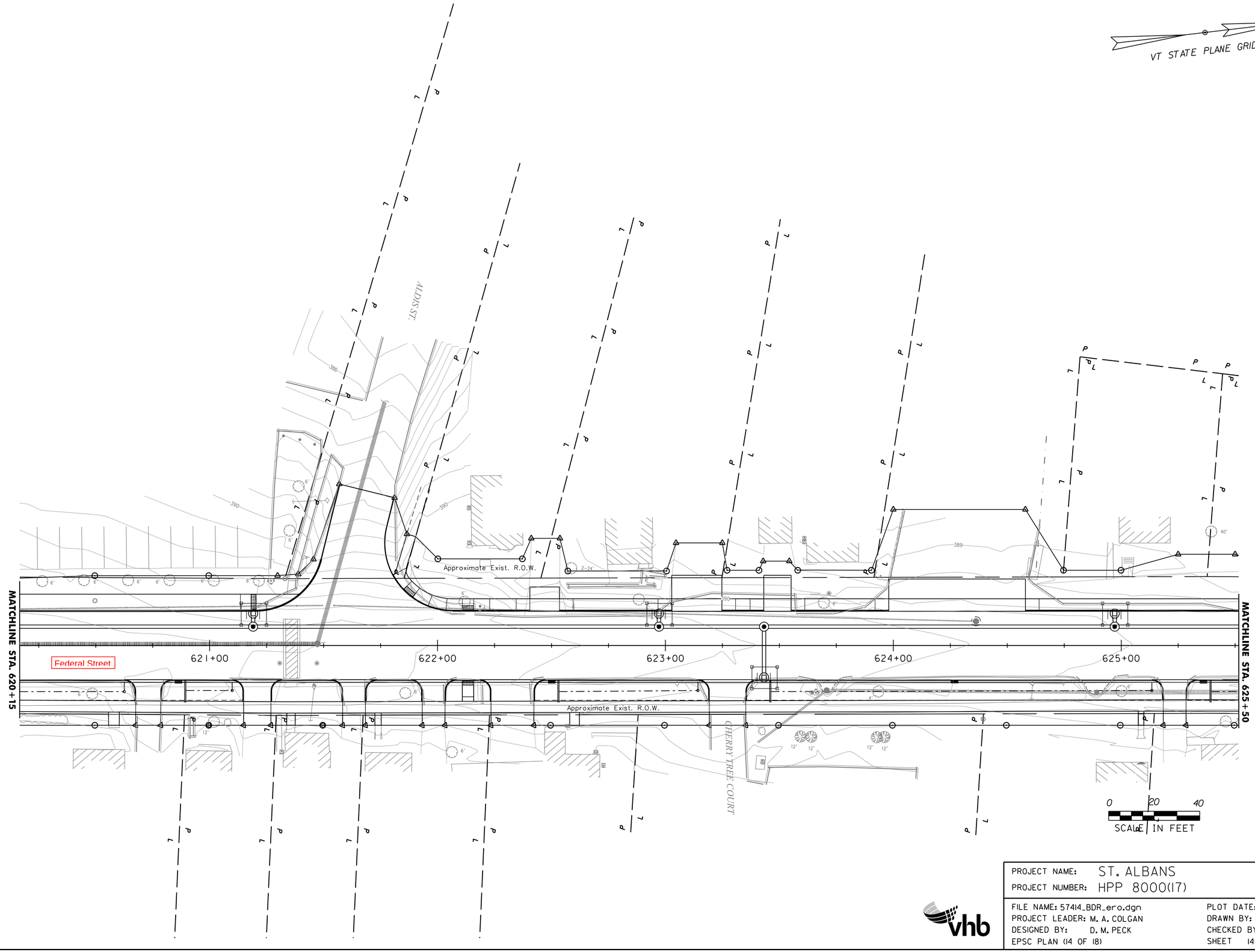

PROJECT NAME:	ST. ALBANS
PROJECT NUMBER:	HPP 8000(17)

FILE NAME: 57414_BDR_ero.dgn	PLOT DATE: 3/4/2016
PROJECT LEADER: M. A. COLGAN	DRAWN BY: A.J. GOUDREAU
DESIGNED BY: D. M. PECK	CHECKED BY: M.C. SCOTT
EPSC PLAN (14 OF 18)	SHEET 145 OF 230

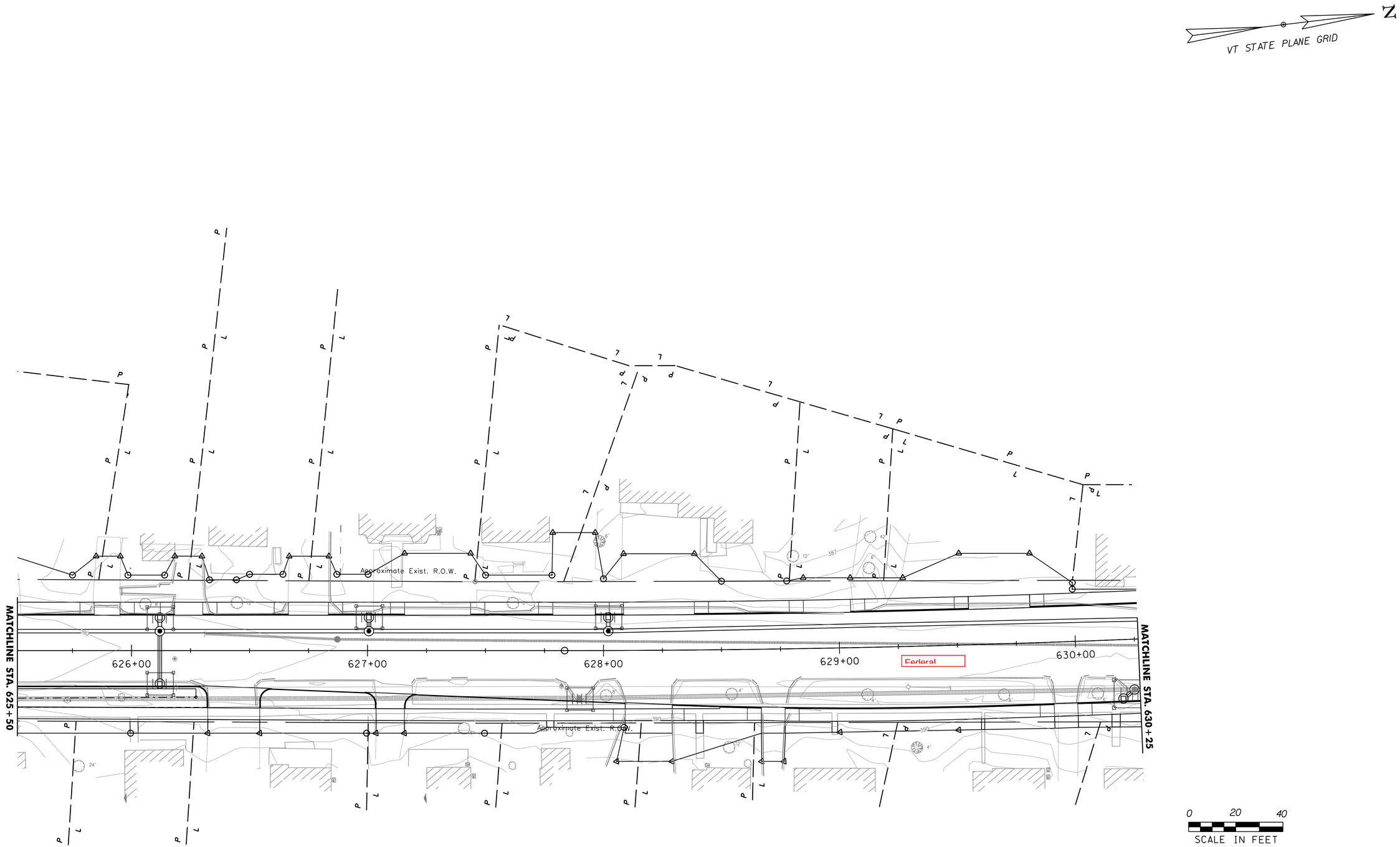

PROJECT NAME:	ST. ALBANS
PROJECT NUMBER:	HPP 8000(17)

FILE NAME: 57414_BDR_ero.dgn	PLOT DATE: 3/4/2016
PROJECT LEADER: M. A. COLGAN	DRAWN BY: A.J. GOUDREAU
DESIGNED BY: D. M. PECK	CHECKED BY: M.C. SCOTT
EPSC PLAN (15 OF 18)	SHEET 146 OF 230

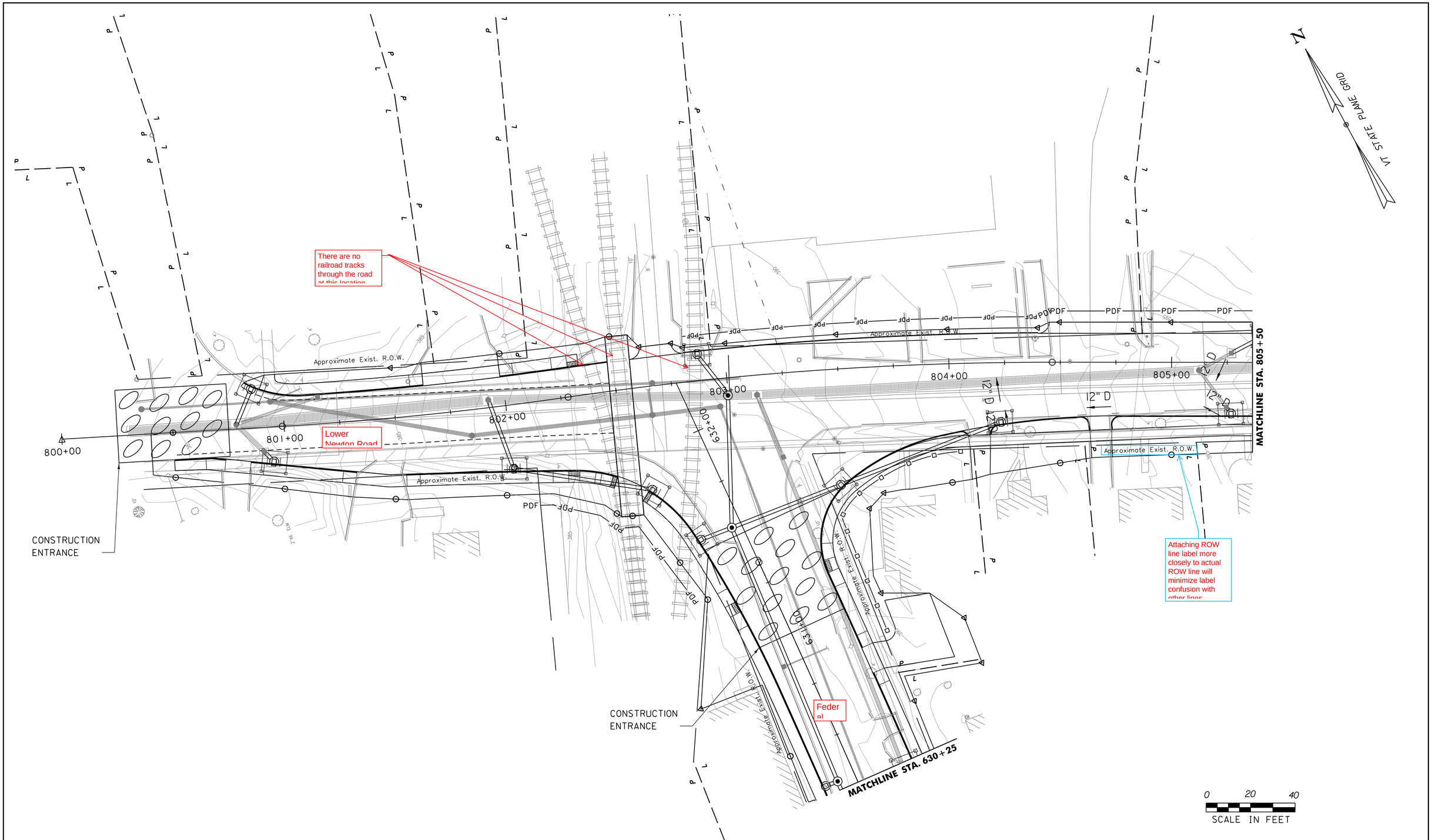

PROJECT NAME:	ST. ALBANS
PROJECT NUMBER:	HPP 8000(17)

FILE NAME: 57414_BDR_ero.dgn	PLOT DATE: 3/4/2016
PROJECT LEADER: M. A. COLGAN	DRAWN BY: A.J. GOUDREAU
DESIGNED BY: D. M. PECK	CHECKED BY: M.C. SCOTT
EPSC PLAN (16 OF 18)	SHEET 147 OF 230

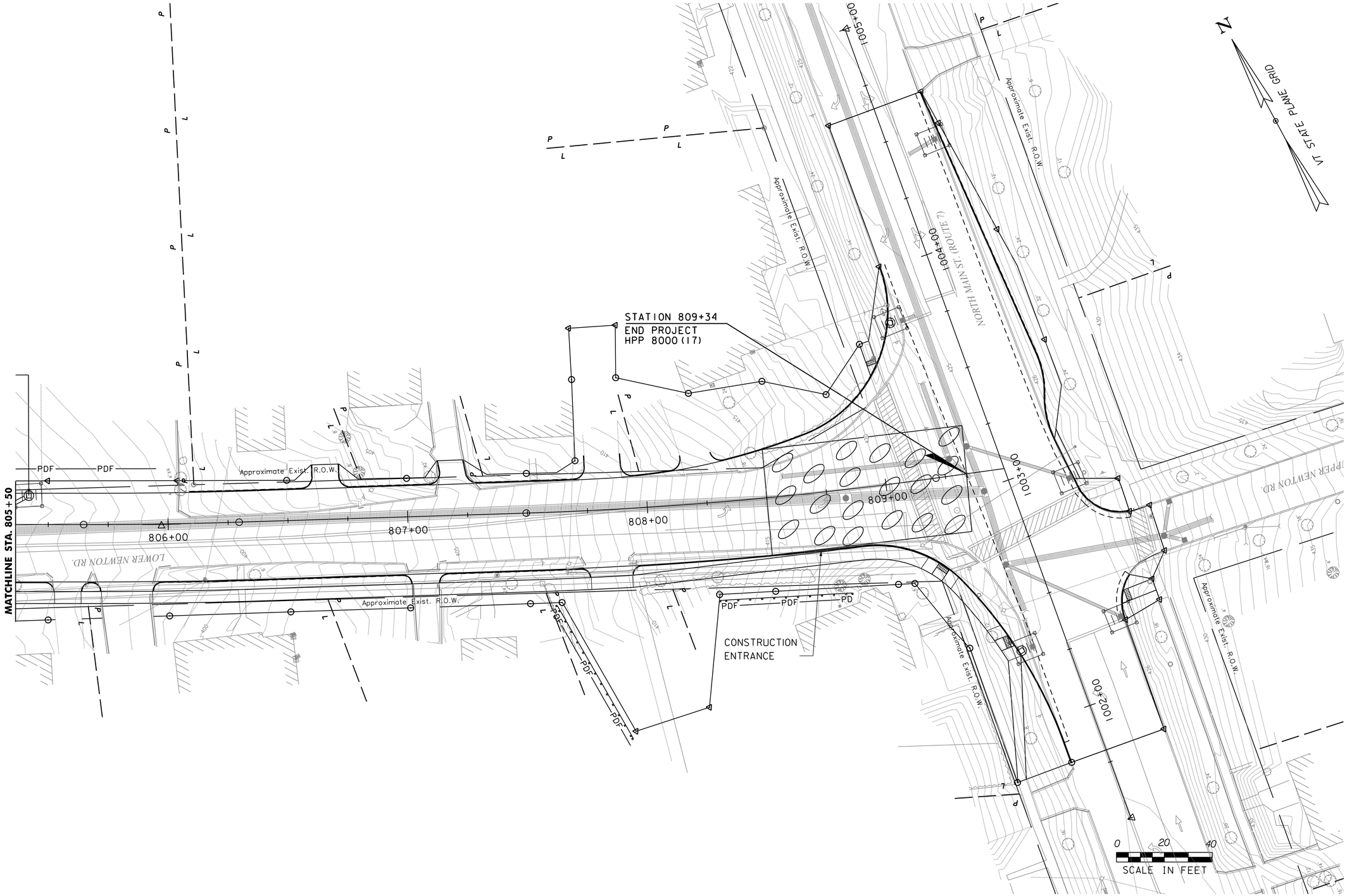

PROJECT NAME:	ST. ALBANS
PROJECT NUMBER:	HPP 8000(17)

vhb

FILE NAME: 57414_BDR_ero.dgn	PLOT DATE: 3/4/2016
PROJECT LEADER: M. A. COLGAN	DRAWN BY: A.J. GOUDREAU
DESIGNED BY: D. M. PECK	CHECKED BY: M.C. SCOTT
EPSC PLAN (17 OF 18)	SHEET 148 OF 230

VHB 57414.00

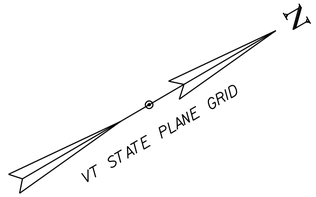

Could this be an inset on a related

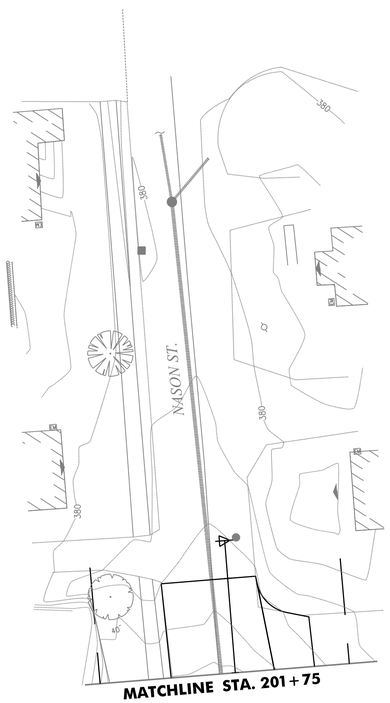

PROJECT NAME: ST. ALBANS	
PROJECT NUMBER: HPP 8000(17)	
FILE NAME: 57414_BDR_ero.dgn	PLOT DATE: 3/4/2016
PROJECT LEADER: M. A. COLGAN	DRAWN BY: A.J. GOUDREAU
DESIGNED BY: D. M. PECK	CHECKED BY: M.C. SCOTT
EPSC PLANS	SHEET 149 OF 230

VHB 57414.00

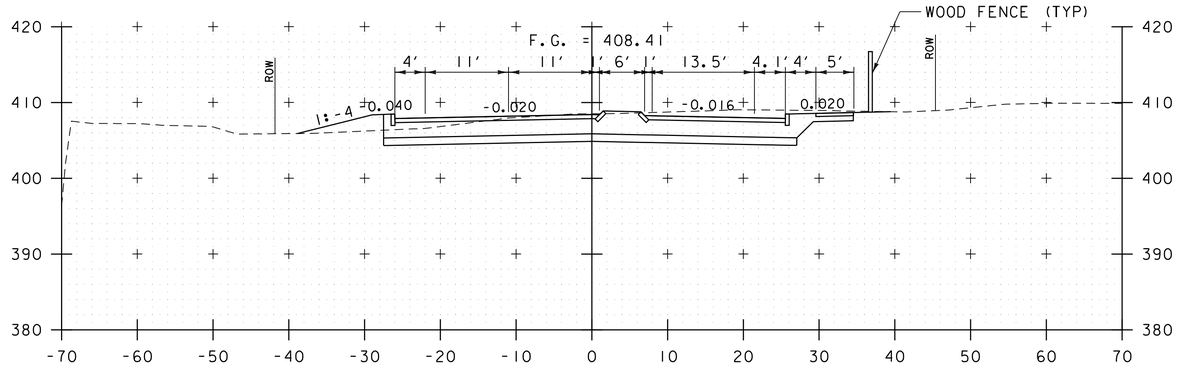

101+00

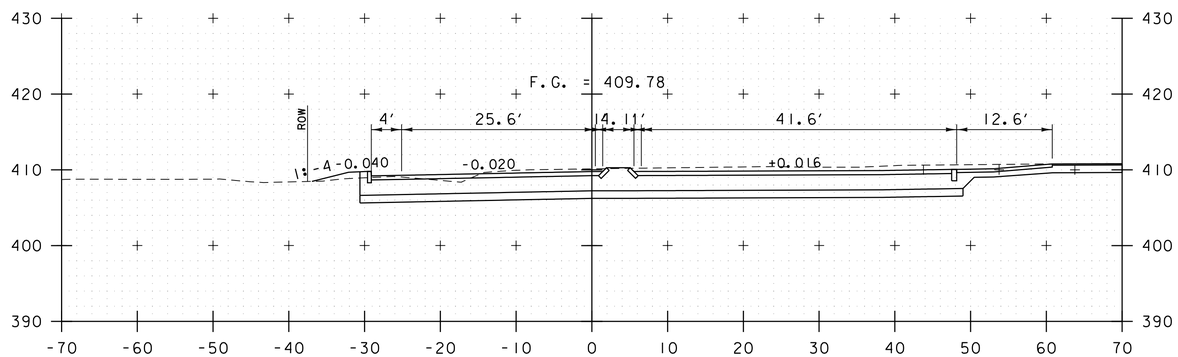

100+50

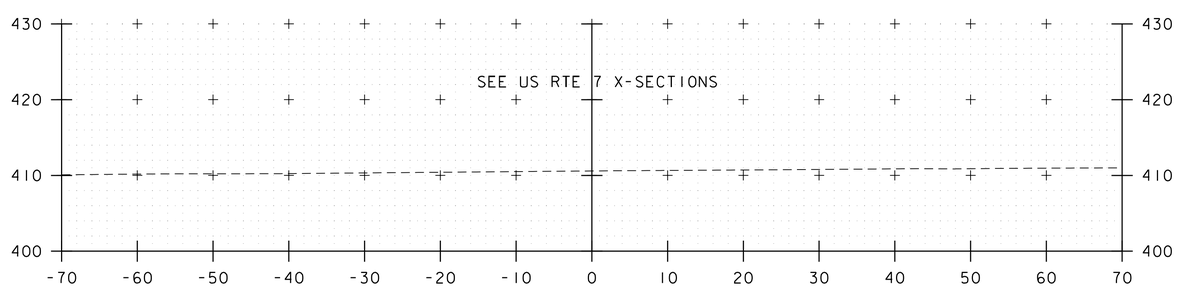

100+00

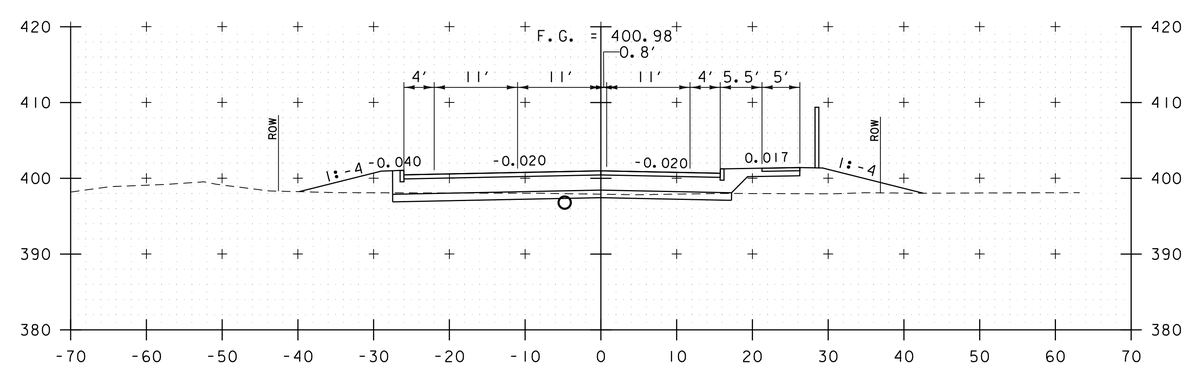

102+50

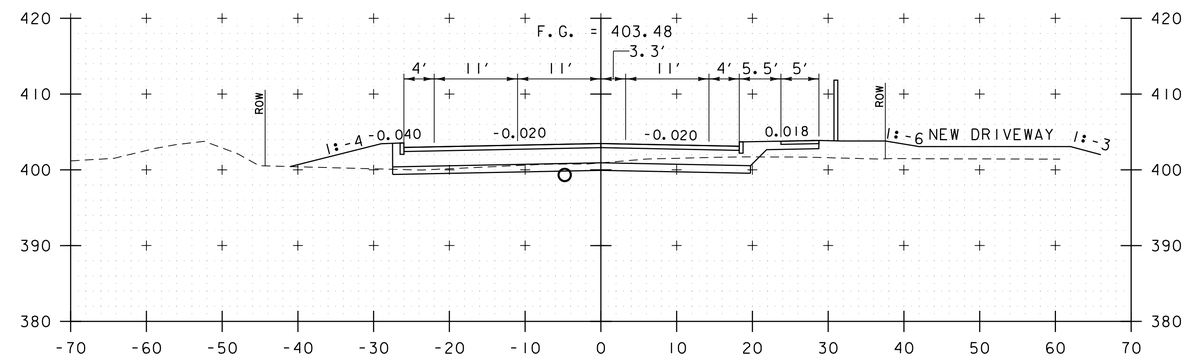

102+00

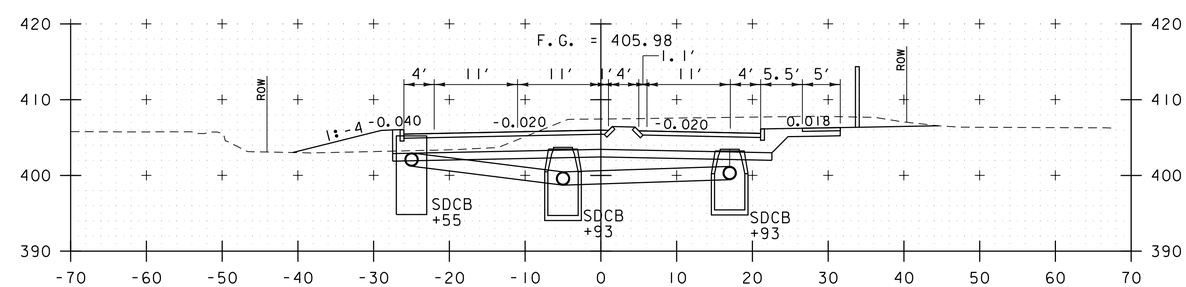

101+50

Include Horizontal & Vertical bar Scales for all cross sections

It looks like some of the Gas lines shown in the layout sheets do not transfer into the cross sections.

All proposed installations such as water and sewer should be called out as such in the cross sections.

NASON STREET CONNECTOR

PROJECT NAME: ST. ALBANS	
PROJECT NUMBER: HPP 8000(17)	
FILE NAME: 57414_XS_NasonConnector.dgn	PLOT DATE: 3/4/2016
PROJECT LEADER: J.D. SALADINO	DRAWN BY: DMP / WAD
DESIGNED BY: D.M. PECK	CHECKED BY: G.L. BAKOS
CROSS SECTION SHEET 1	SHEET 51 OF 106

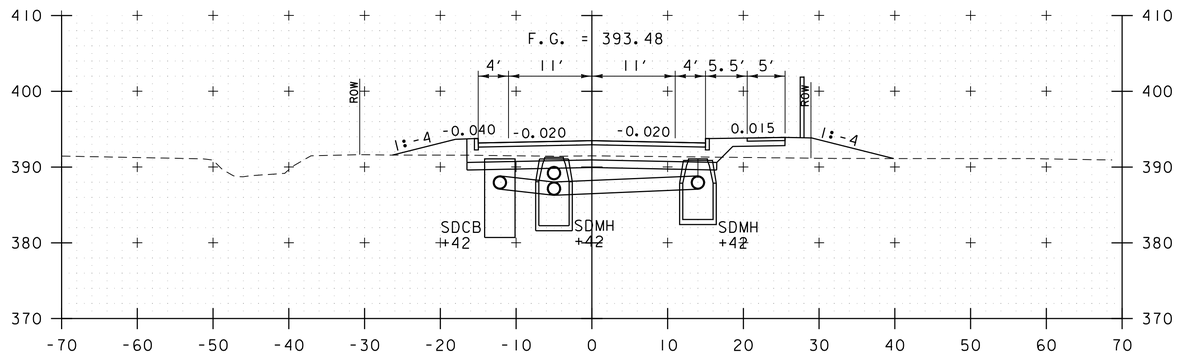

104+00

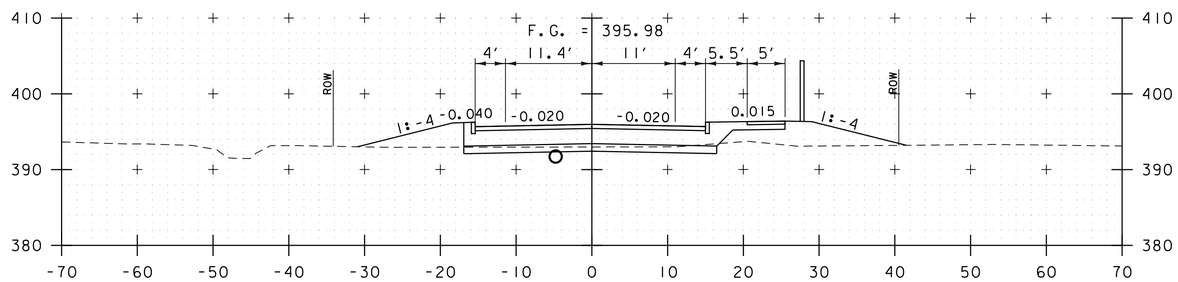

103+50

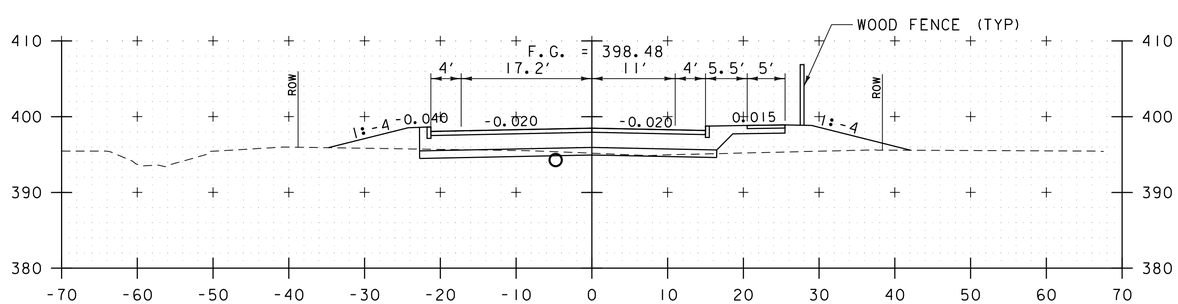

103+00

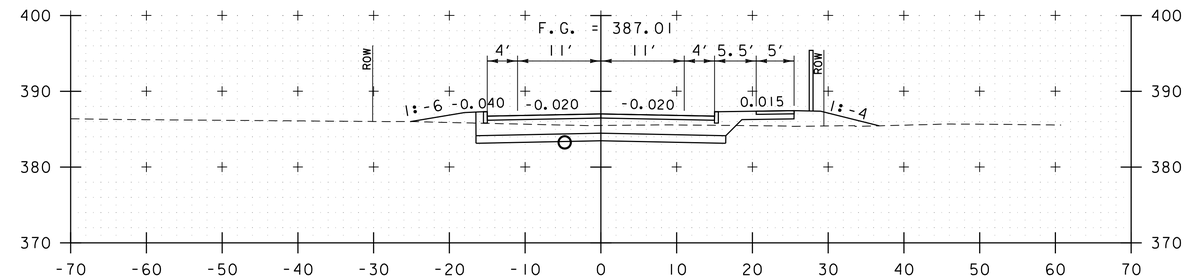

105+50

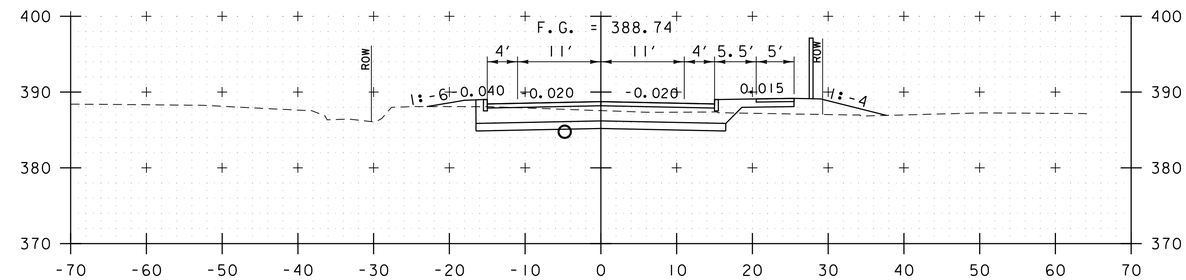

105+00

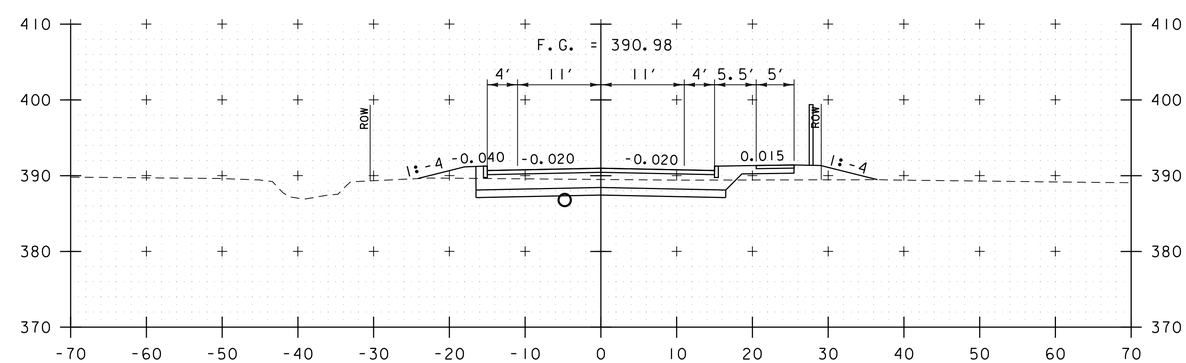

104+50

NASON STREET CONNECTOR

PROJECT NAME: ST. ALBANS	
PROJECT NUMBER: HPP 8000(17)	
FILE NAME: 57414_XS_NasonConnector.dgn	PLOT DATE: 3/4/2016
PROJECT LEADER: J.D. SALADINO	DRAWN BY: DMP / WAD
DESIGNED BY: D.M. PECK	CHECKED BY: G.L. BAKOS
CROSS SECTION SHEET 2	SHEET 52 OF 106

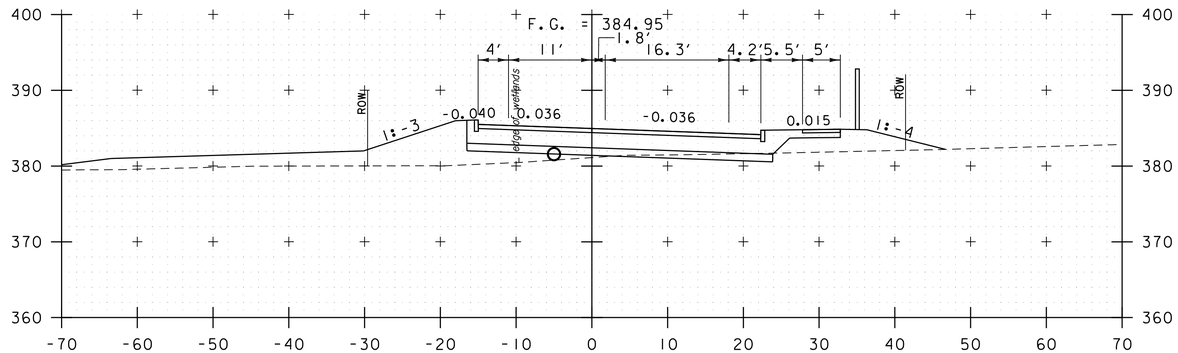

107+00

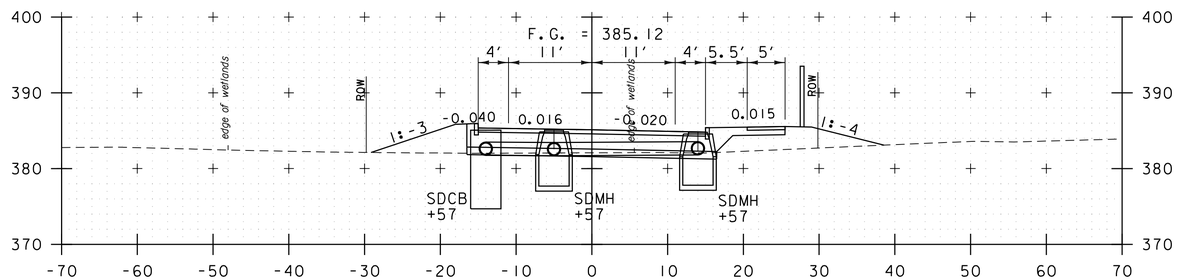

106+50

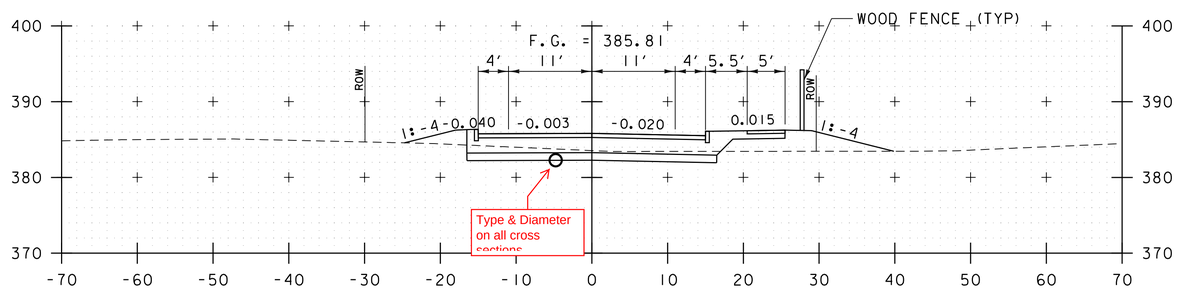

106+00

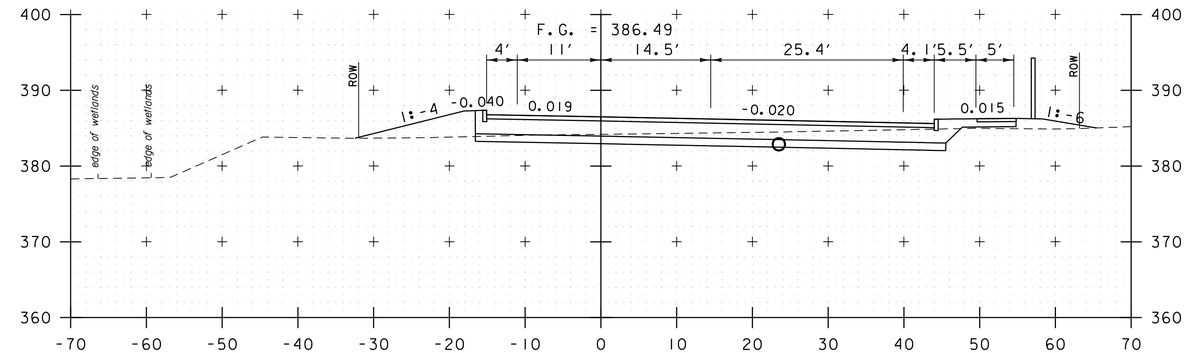

108+50

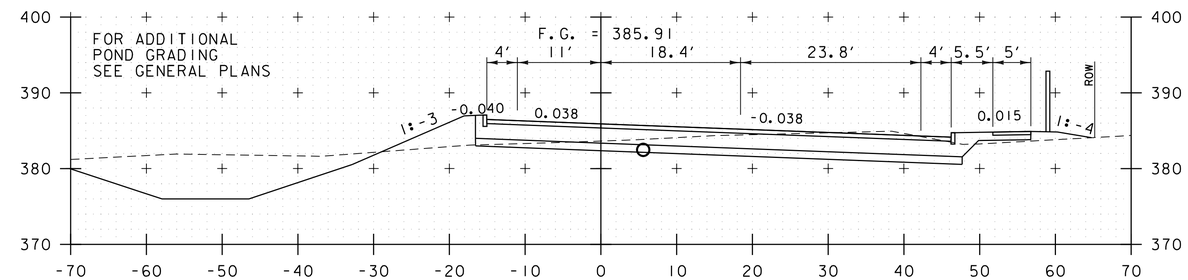

108+00

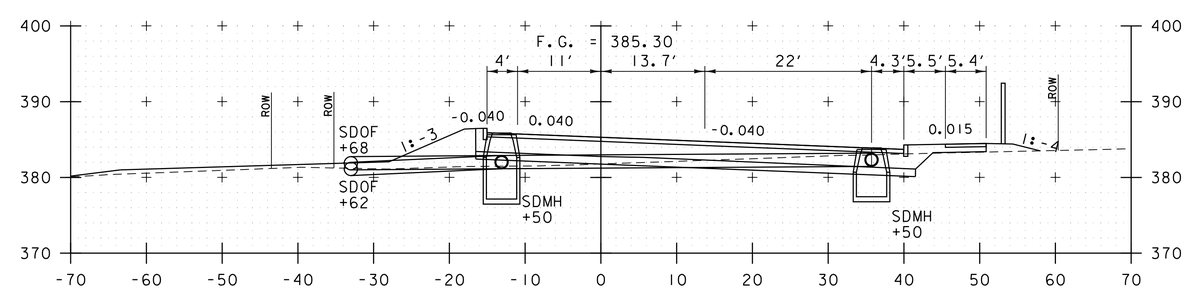

107+50

NASON STREET CONNECTOR

PROJECT NAME: ST. ALBANS	
PROJECT NUMBER: HPP 8000(17)	
FILE NAME: 57414_XS_NasonConnector.dgn	PLOT DATE: 3/4/2016
PROJECT LEADER: J.D. SALADINO	DRAWN BY: DMP / WAD
DESIGNED BY: D.M. PECK	CHECKED BY: G.L. BAKOS
CROSS SECTION SHEET 3	SHEET 53 OF 106

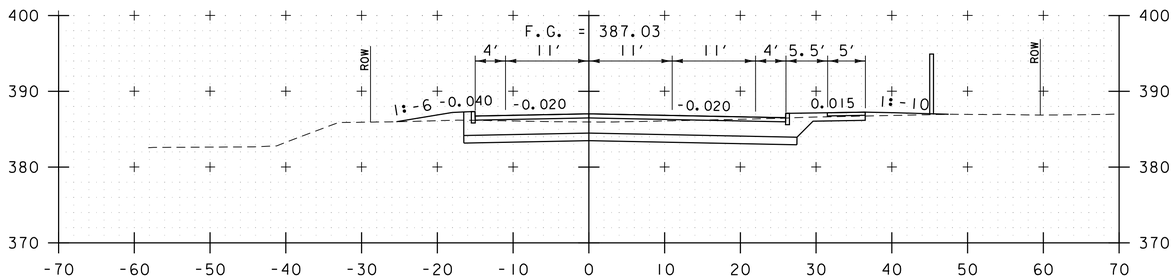

110+00

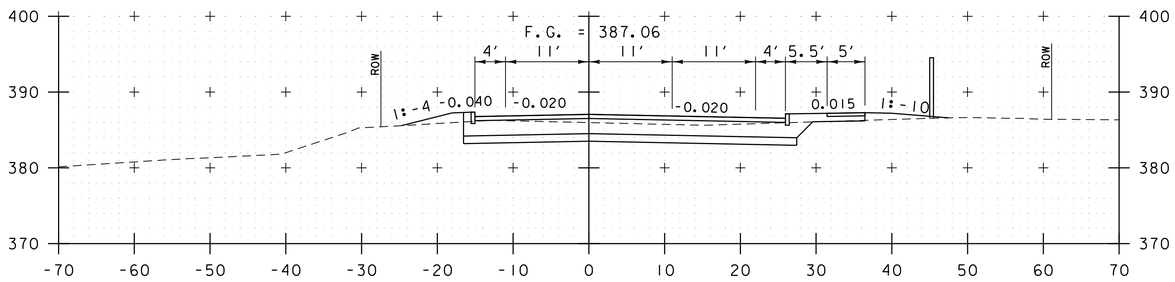

109+50

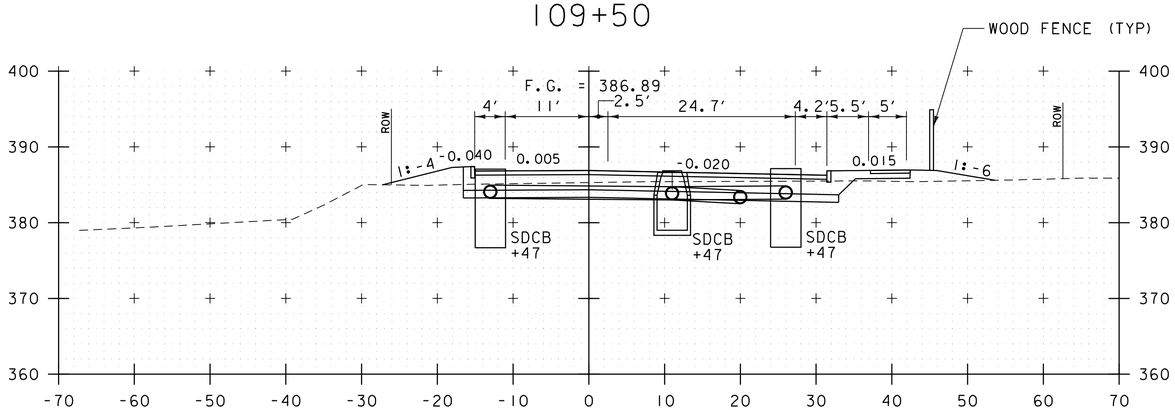

109+00

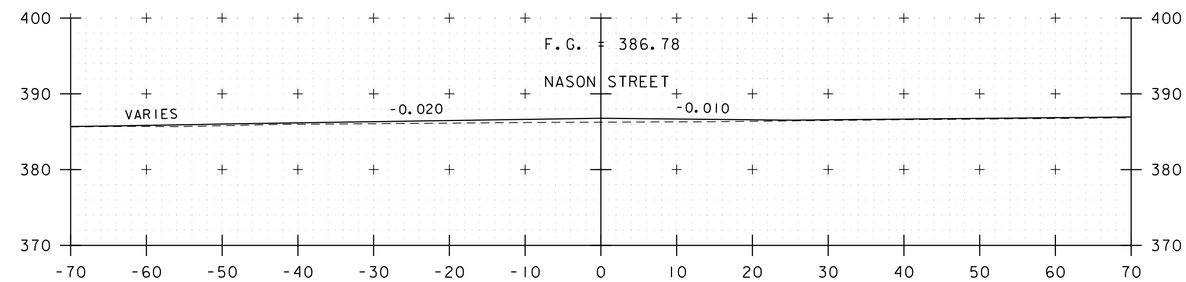

110+56

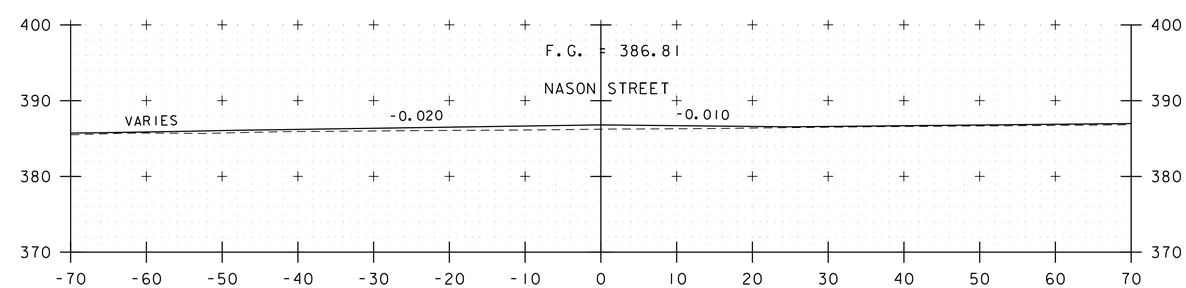

110+50

NASON STREET CONNECTOR

PROJECT NAME: ST. ALBANS	
PROJECT NUMBER: HPP 8000(17)	
FILE NAME: 57414_XS_NasonConnector.dgn	PLOT DATE: 3/4/2016
PROJECT LEADER: J.D. SALADINO	DRAWN BY: DMP / WAD
DESIGNED BY: D.M. PECK	CHECKED BY: G.L. BAKOS
CROSS SECTION SHEET 4	SHEET 54 OF 106

STA. 202+67
END RAILROAD CROSSING
BEGIN ROADWAY WORK

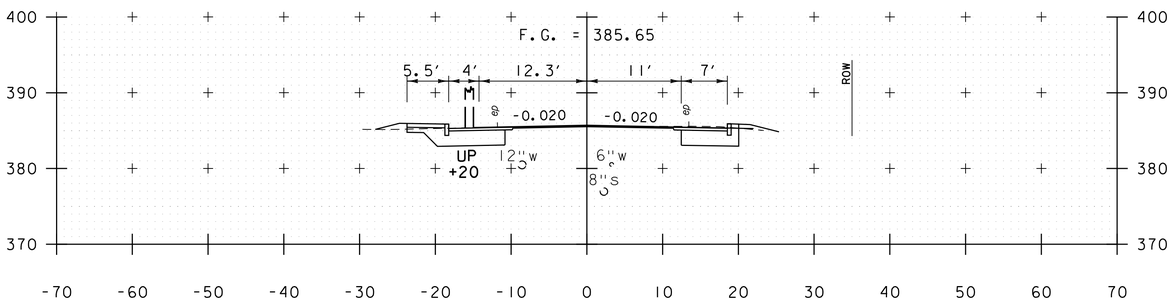

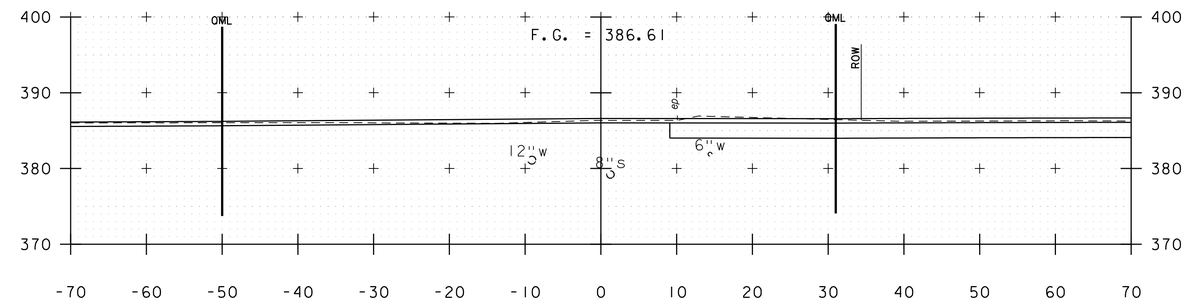

STA. 202+57
END ROADWAY WORK
BEGIN RAILROAD CROSSING

203+00

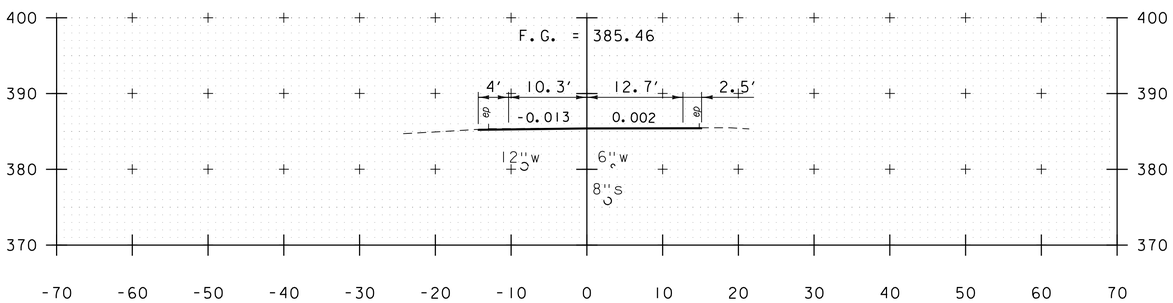

SEE LEMNAH DRIVE
CROSS SECTIONS

204+00

SEE NASON CONNECTOR
CROSS SECTIONS

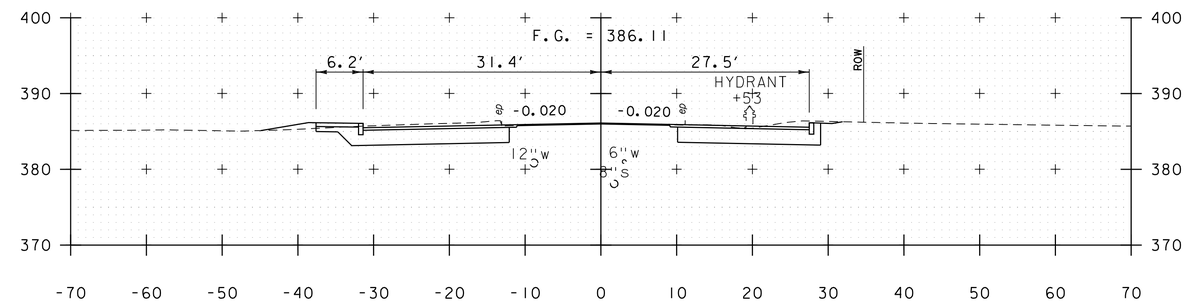

202+50

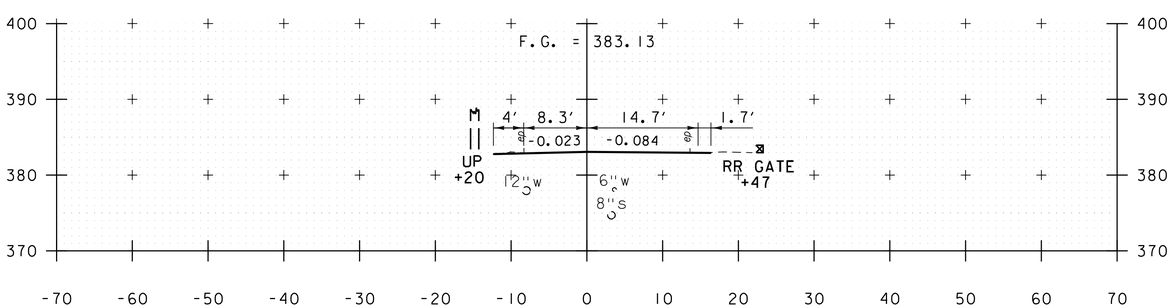

203+50

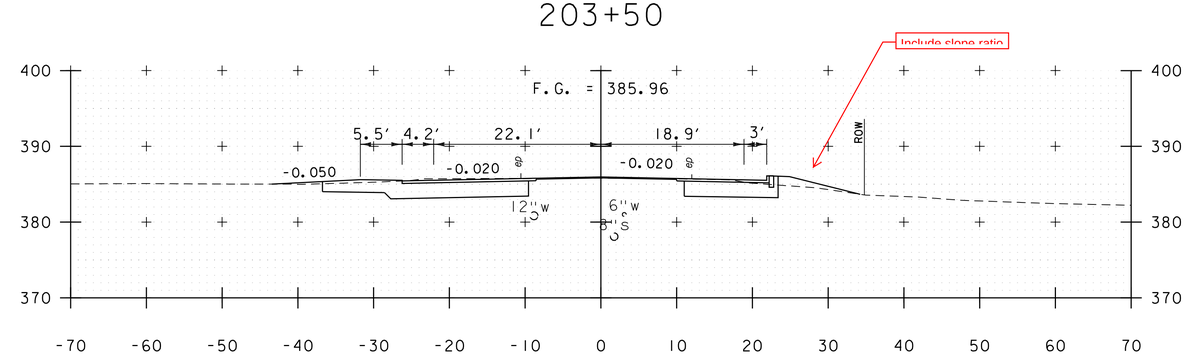

202+00

203+35

NASON STREET

PROJECT NAME: ST. ALBANS	
PROJECT NUMBER: HPP 8000(17)	
FILE NAME: 57414_XS_NasonStreet.dgn	PLOT DATE: 3/4/2016
PROJECT LEADER: M.A. COLGAN	DRAWN BY: K.C. BARRY
DESIGNED BY: D.M. PECK	CHECKED BY: M.J. SERVETAS
CROSS SECTION SHEET X OF XX	SHEET 154 OF 230

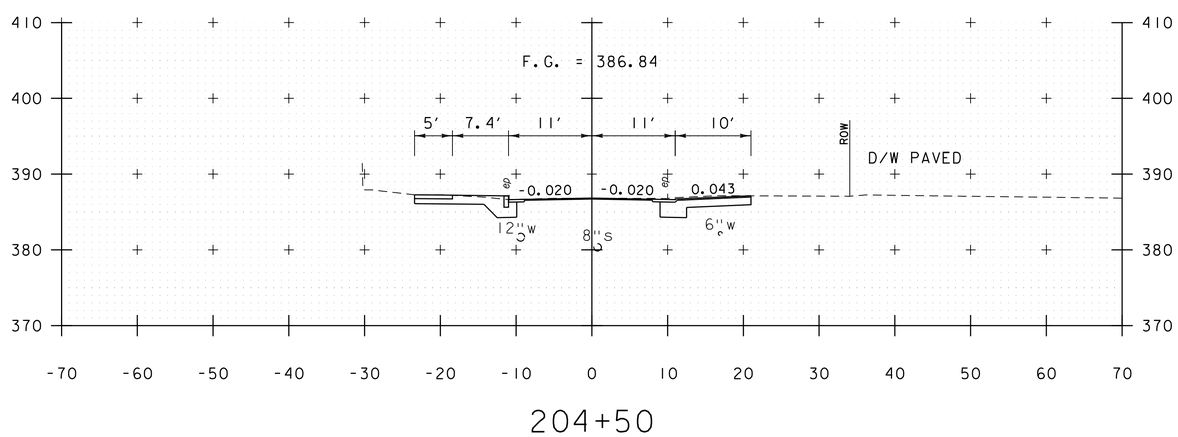

204+50

NASON STREET

PROJECT NAME: ST. ALBANS	
PROJECT NUMBER: HPP 8000(17)	
FILE NAME: 57414_XS_NasonStreet.dgn	PLOT DATE: 3/4/2016
PROJECT LEADER: M.A. COLGAN	DRAWN BY: K.C. BARRY
DESIGNED BY: D.M. PECK	CHECKED BY: M.J. SERVETAS
CROSS SECTION SHEET X OF XX	SHEET 155 OF 230

VHB 57414.00

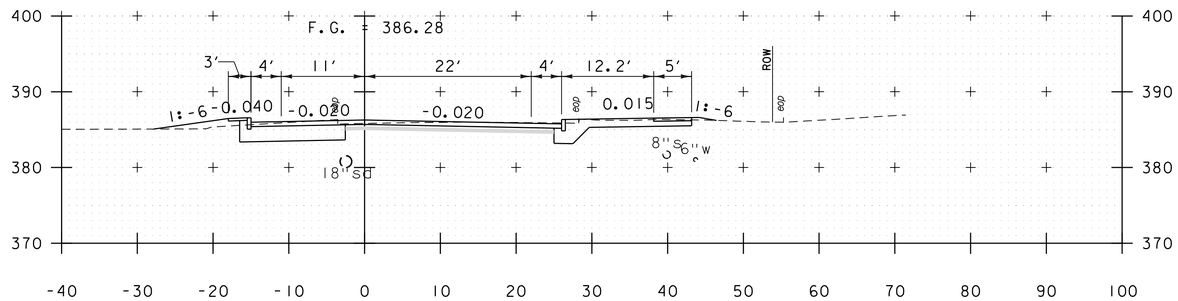

301+00

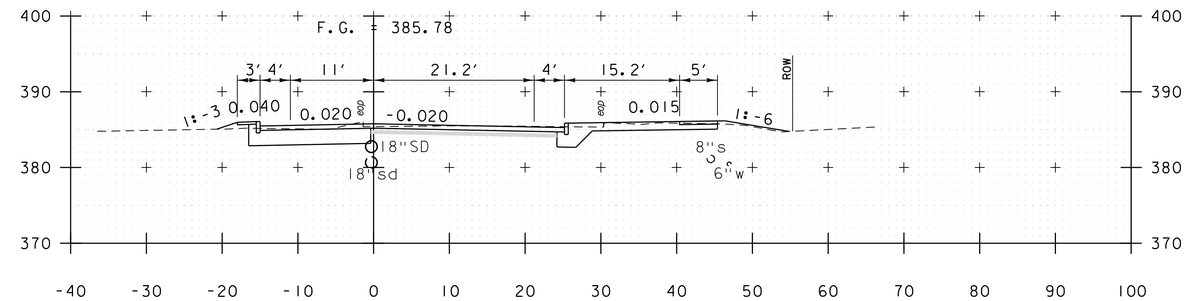

302+00

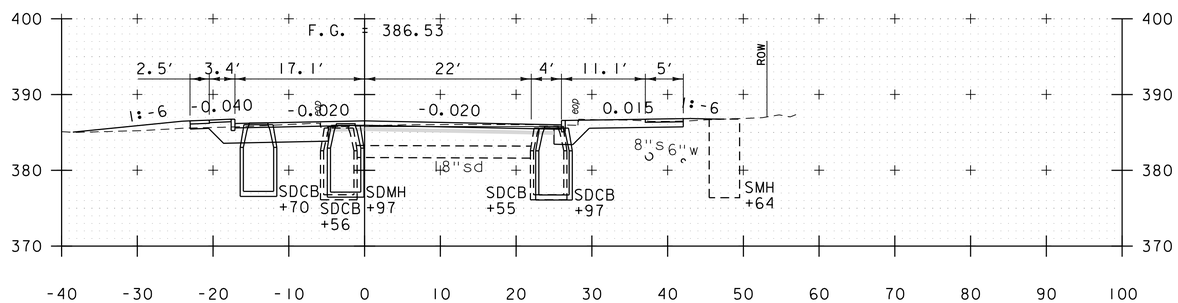

300+50

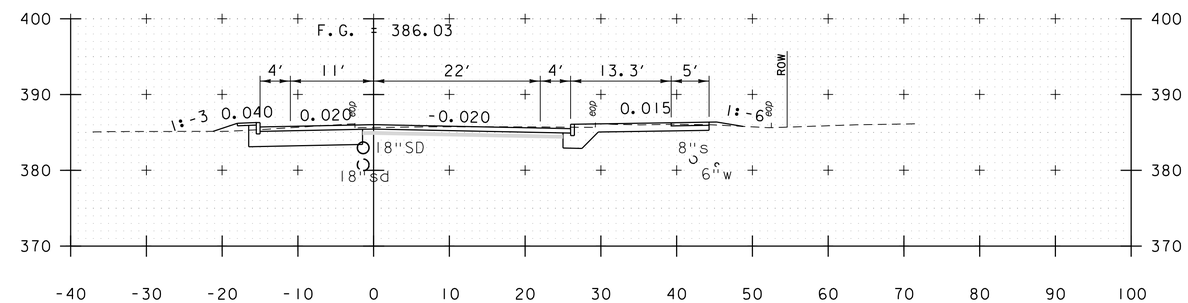

301+50

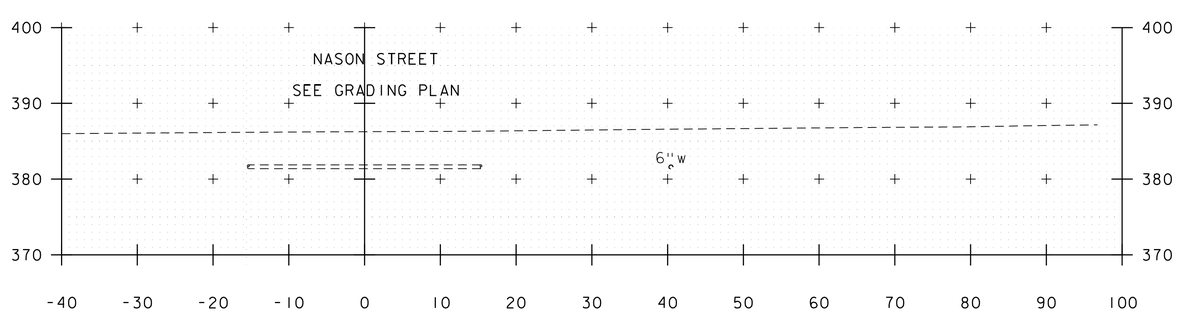

300+00

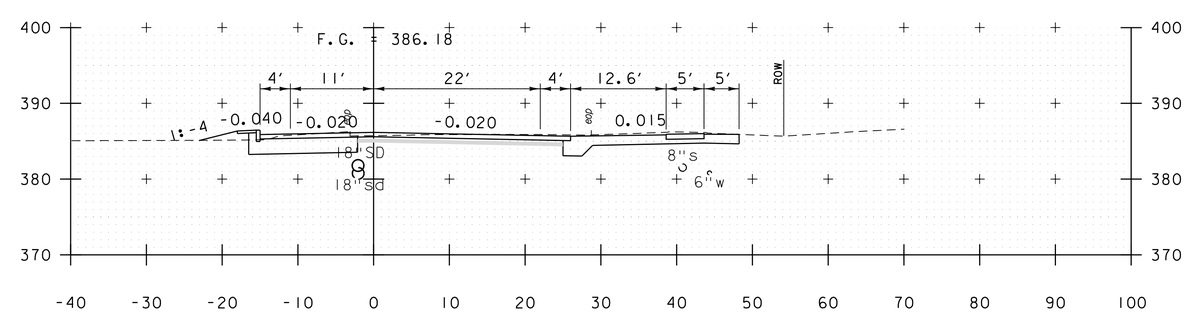

301+20

LEMNAH DRIVE

PROJECT NAME: ST. ALBANS	
PROJECT NUMBER: HPP 8000(17)	
FILE NAME: 57414_XS_LemnahDrive.dgn	PLOT DATE: 3/4/2016
PROJECT LEADER: M.A. COLGAN	DRAWN BY: M.C. SCOTT
DESIGNED BY: M.C. SCOTT	CHECKED BY: ------
CROSS SECTIONS	SHEET 156 OF 230

VHB 57414.00

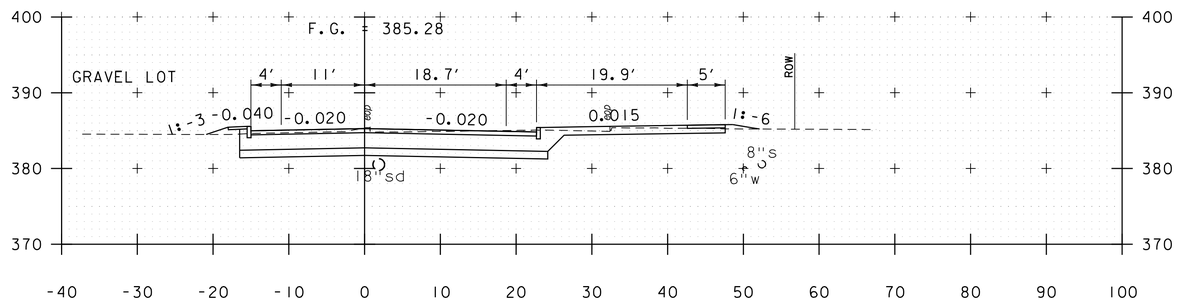

303+00

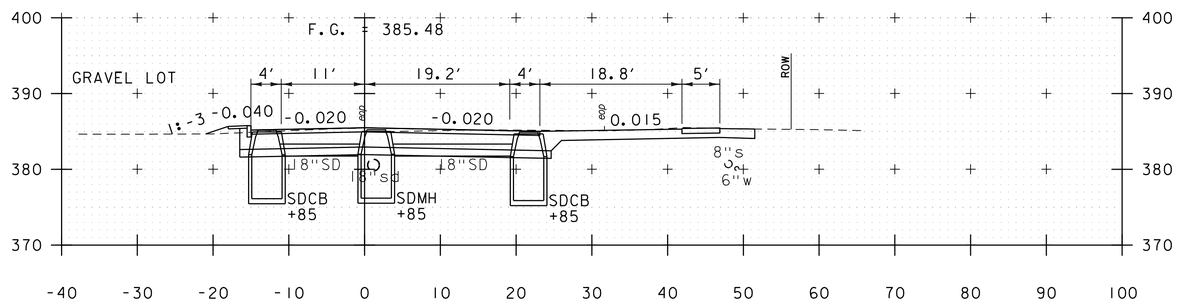

302+68

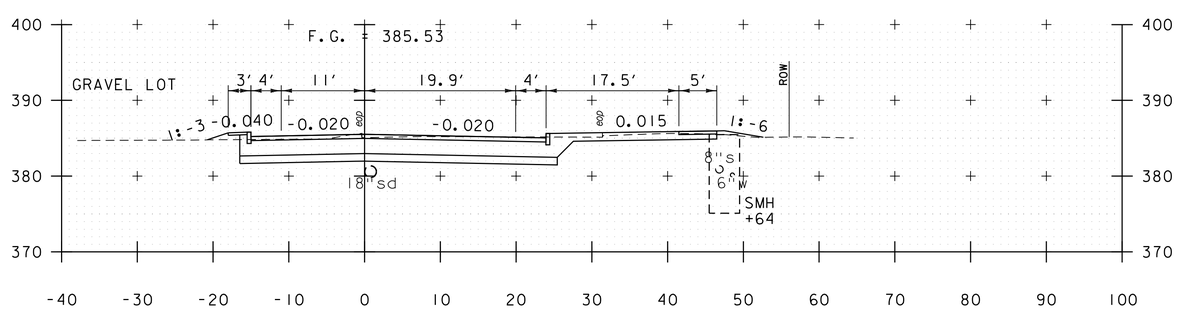

302+50

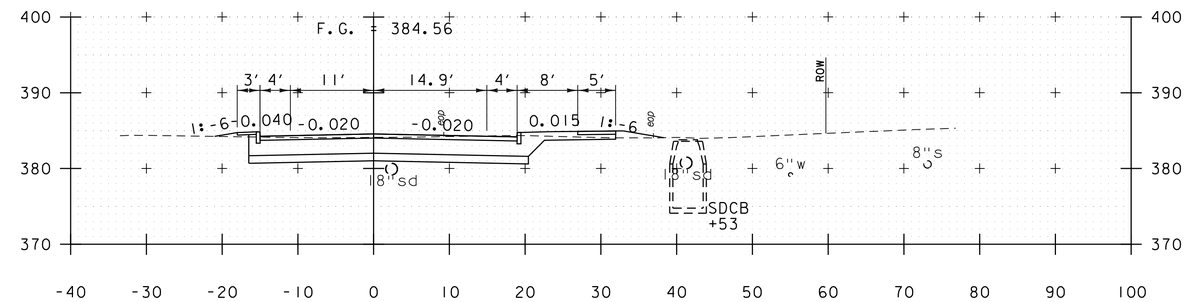

304+50

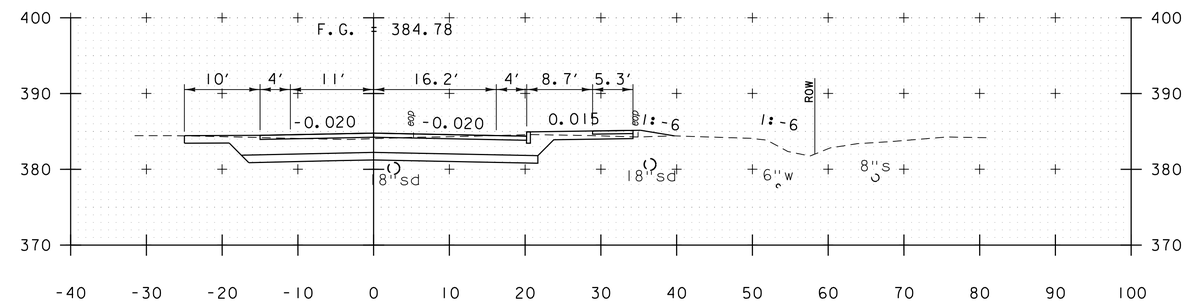

304+00

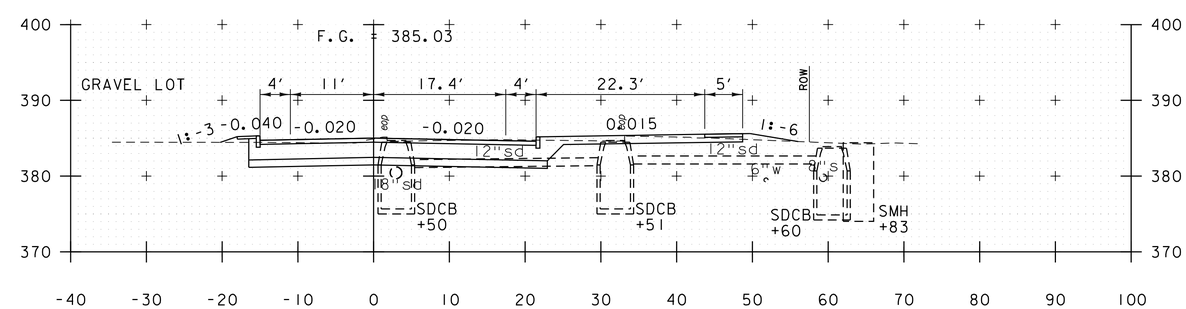

303+50

LEMNAH DRIVE

PROJECT NAME: ST. ALBANS
PROJECT NUMBER: HPP 8000(17)

FILE NAME: 57414_XS_LemnahDrive.dgn
PROJECT LEADER: M.A. COLGAN
DESIGNED BY: M.C. SCOTT
CROSS SECTIONS

PLOT DATE: 3/4/2016
DRAWN BY: M.C. SCOTT
CHECKED BY: ------
SHEET 157 OF 230

VHB 57414.00

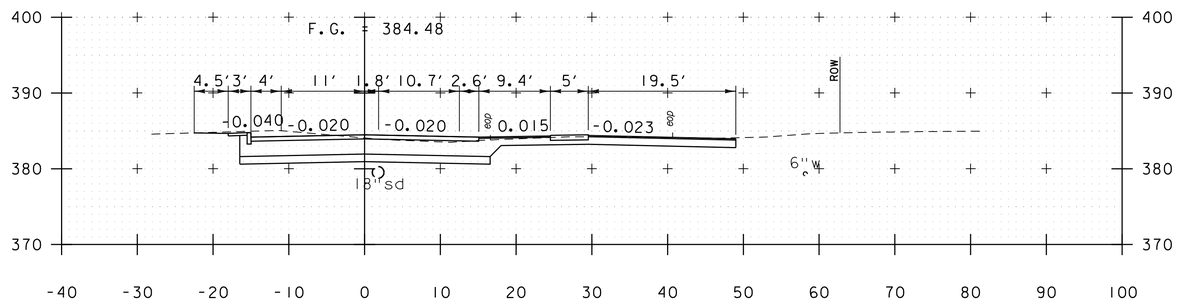

305+47

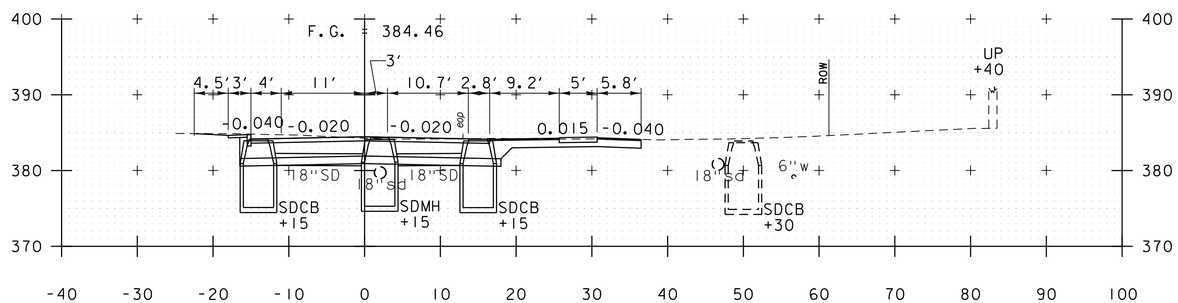

305+00

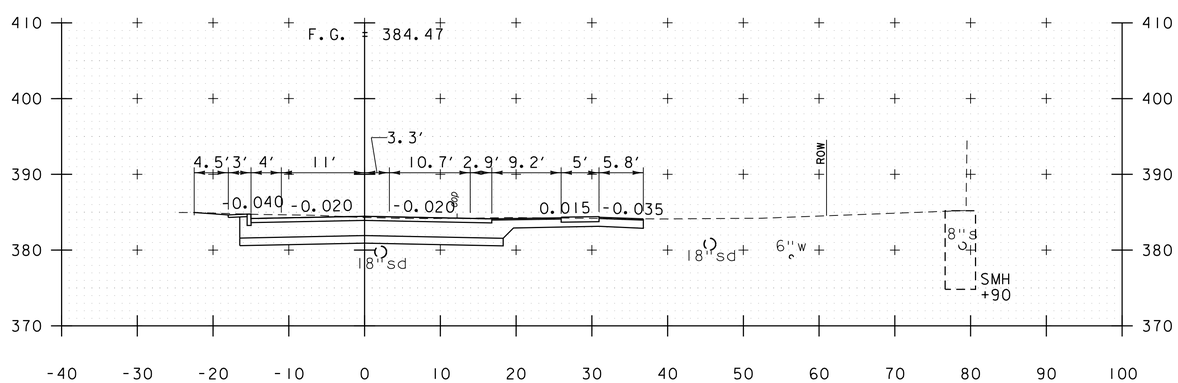

304+90

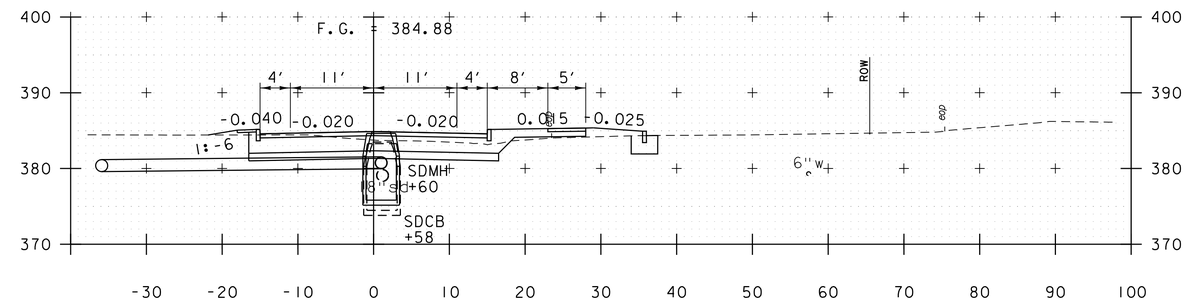

306+50

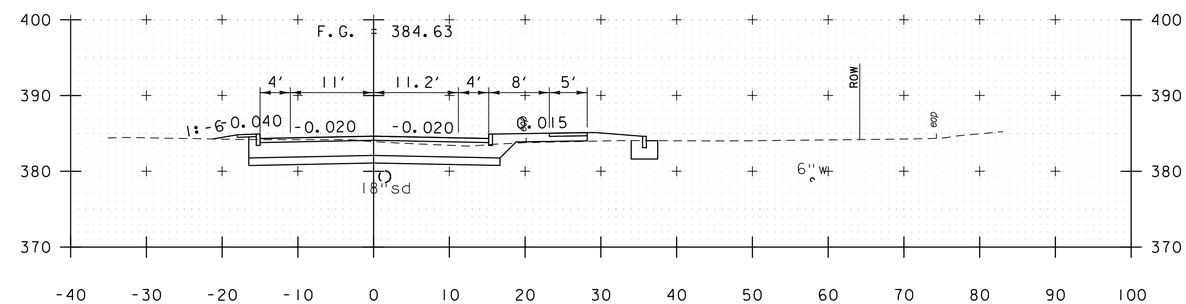

306+00

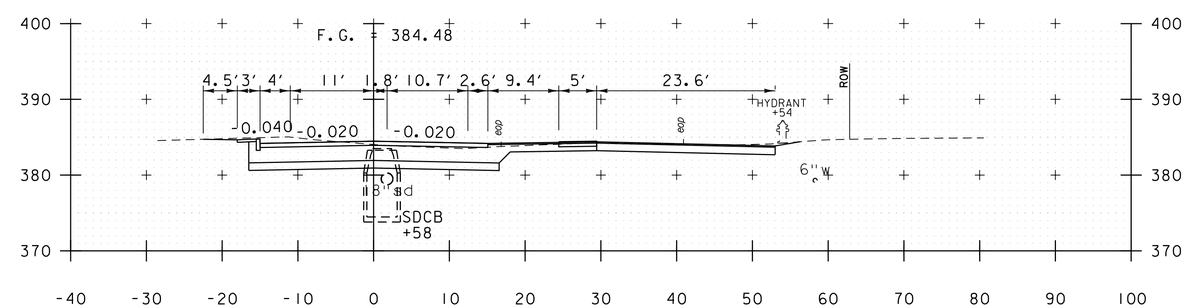

305+50

LEMNAH DRIVE

PROJECT NAME: ST. ALBANS	
PROJECT NUMBER: HPP 8000(17)	
FILE NAME: 57414_XS_LemnahDrive.dgn	PLOT DATE: 3/4/2016
PROJECT LEADER: M.A. COLGAN	DRAWN BY: M.C. SCOTT
DESIGNED BY: M.C. SCOTT	CHECKED BY: ------
CROSS SECTIONS	SHEET 158 OF 230

VHB 57414.00

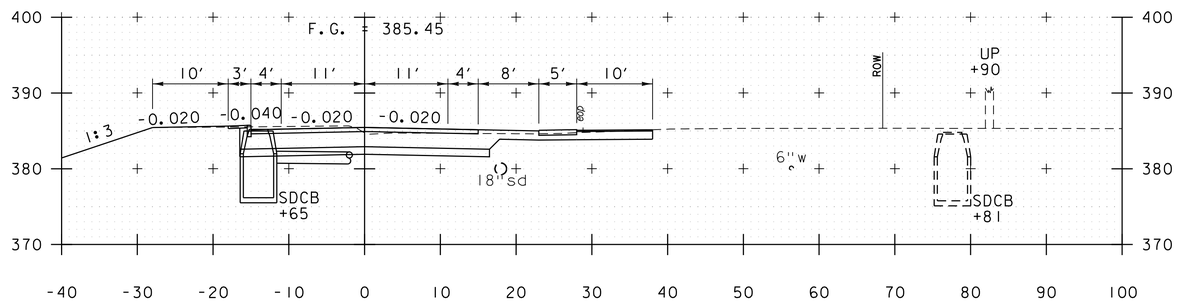

307+59

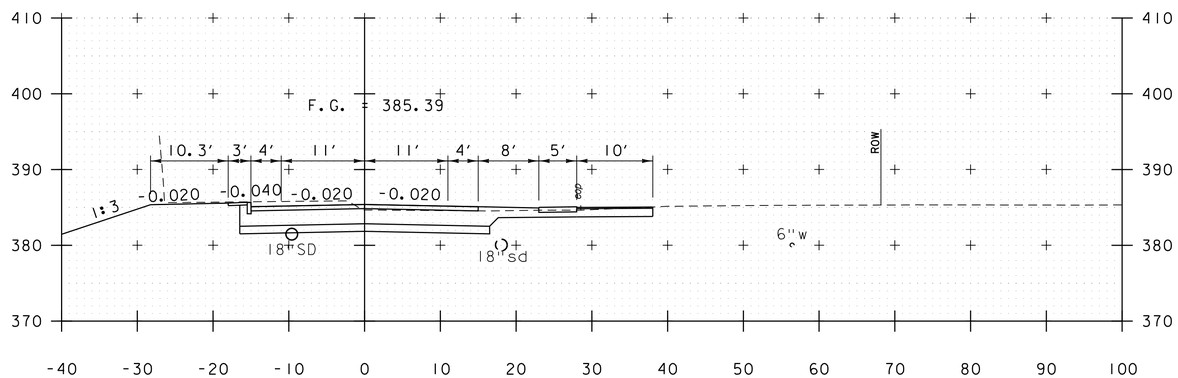

307+50

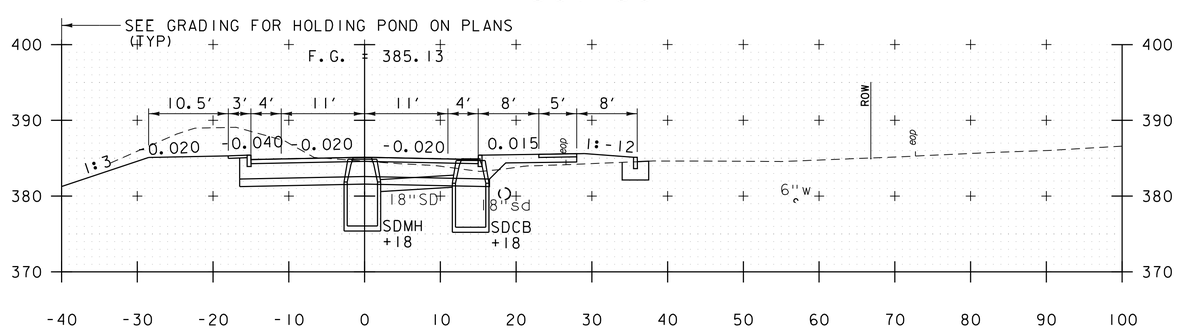

307+00

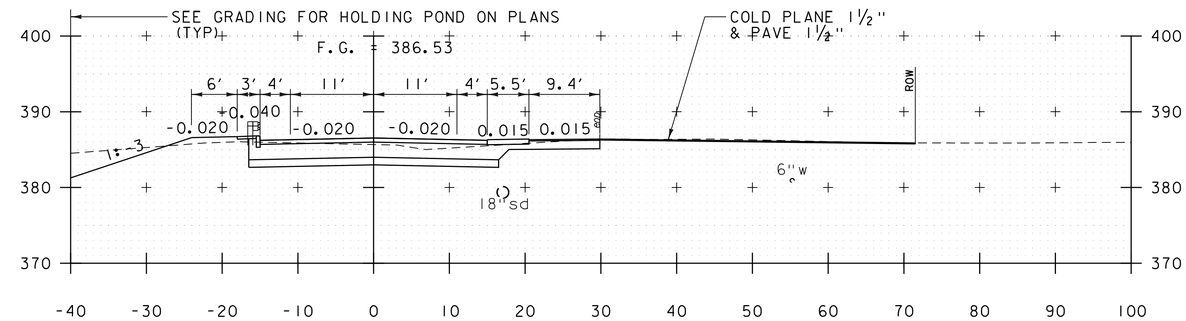

308+65

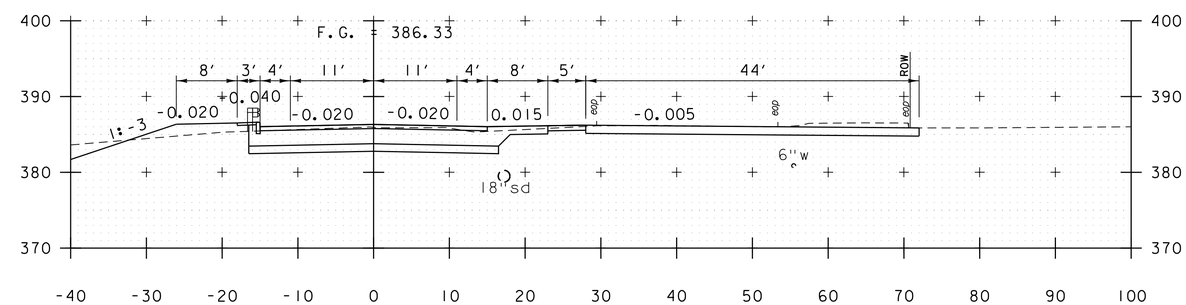

308+50

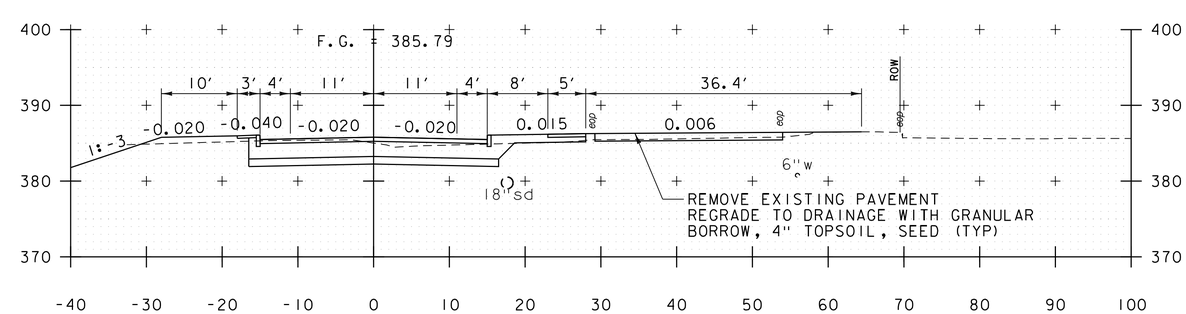

308+00

LEMNAH DRIVE

PROJECT NAME: ST. ALBANS	
PROJECT NUMBER: HPP 8000(17)	
FILE NAME: 57414_XS_LemnahDrive.dgn	PLOT DATE: 3/4/2016
PROJECT LEADER: M.A. COLGAN	DRAWN BY: M.C. SCOTT
DESIGNED BY: M.C. SCOTT	CHECKED BY: ------
CROSS SECTIONS	SHEET 159 OF 230

VHB 57414.00

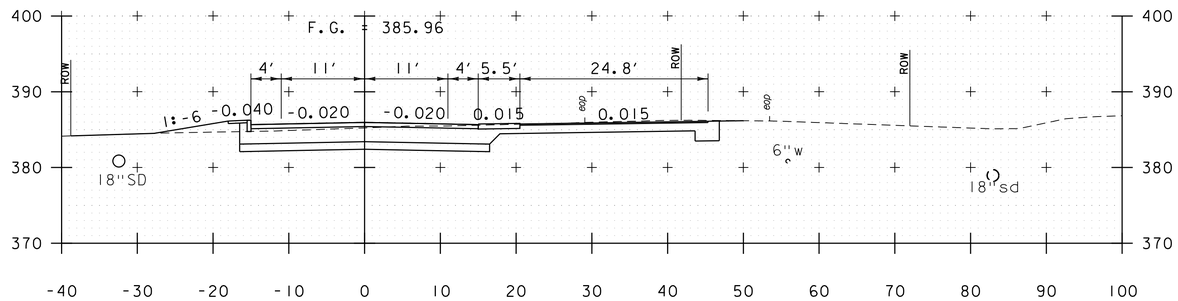

309+85

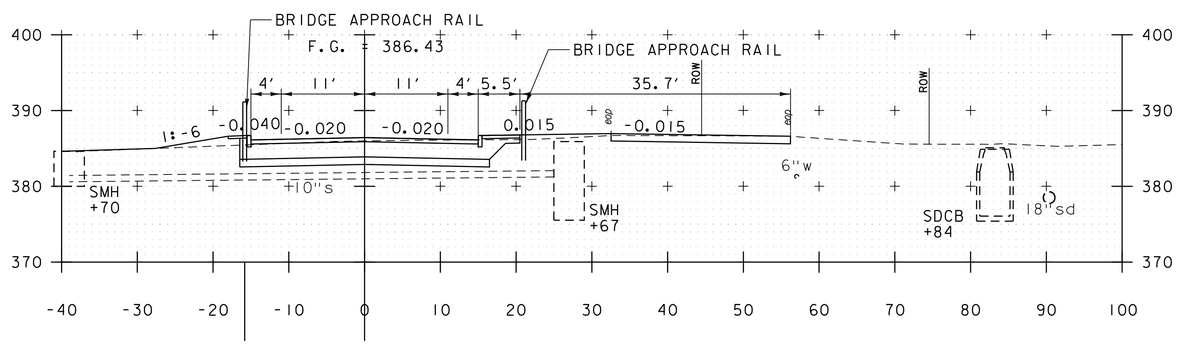

309+50

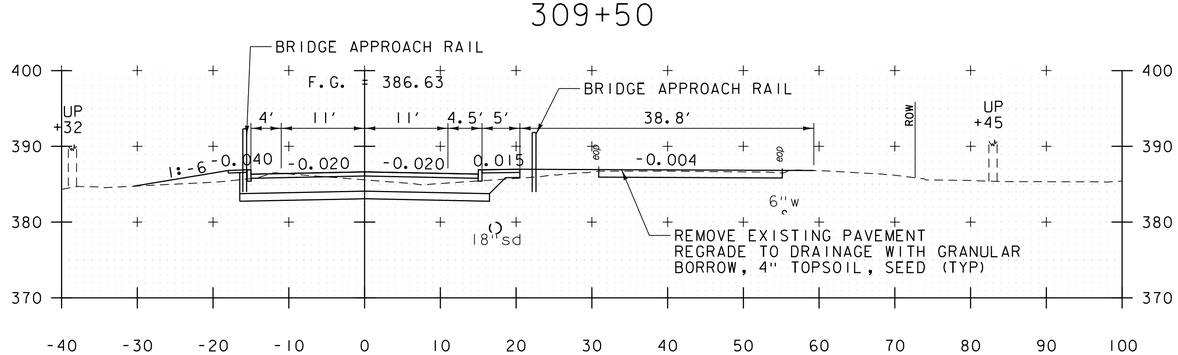

309+00

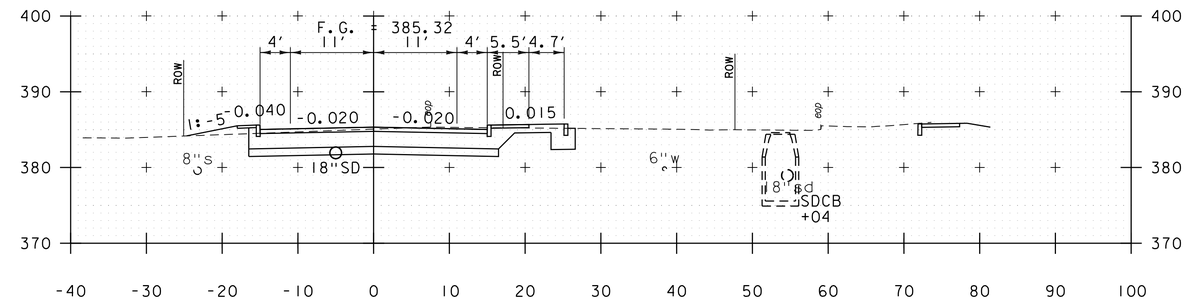

311+00

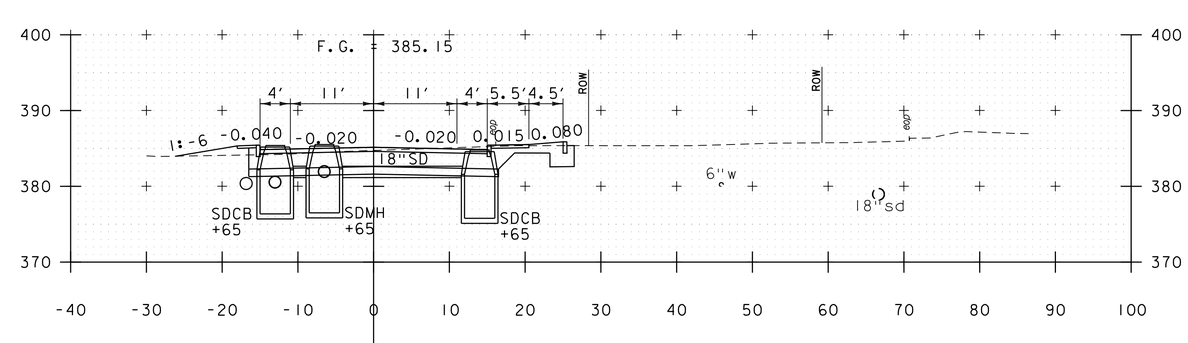

310+50

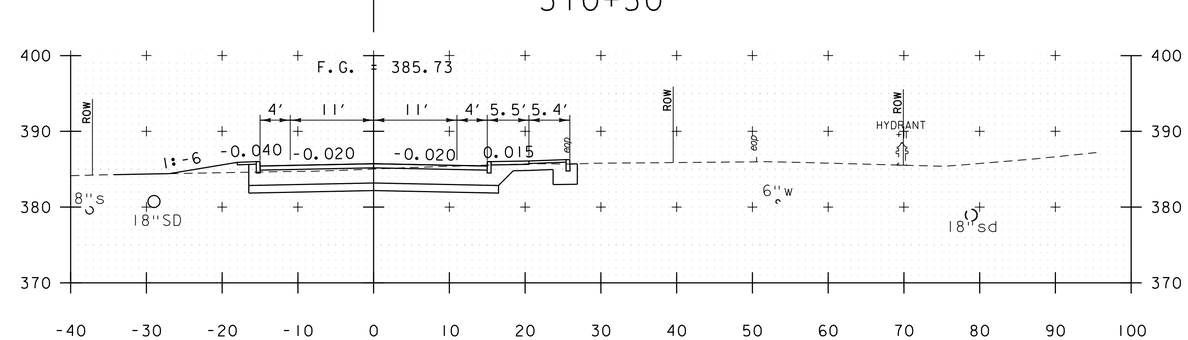

310+00

LEMNAH DRIVE

PROJECT NAME: ST. ALBANS	
PROJECT NUMBER: HPP 8000(17)	
FILE NAME: 57414_XS_LemnahDrive.dgn	PLOT DATE: 3/4/2016
PROJECT LEADER: M.A. COLGAN	DRAWN BY: M.C. SCOTT
DESIGNED BY: M.C. SCOTT	CHECKED BY: ------
CROSS SECTIONS	SHEET 160 OF 230

VHB 57414.00

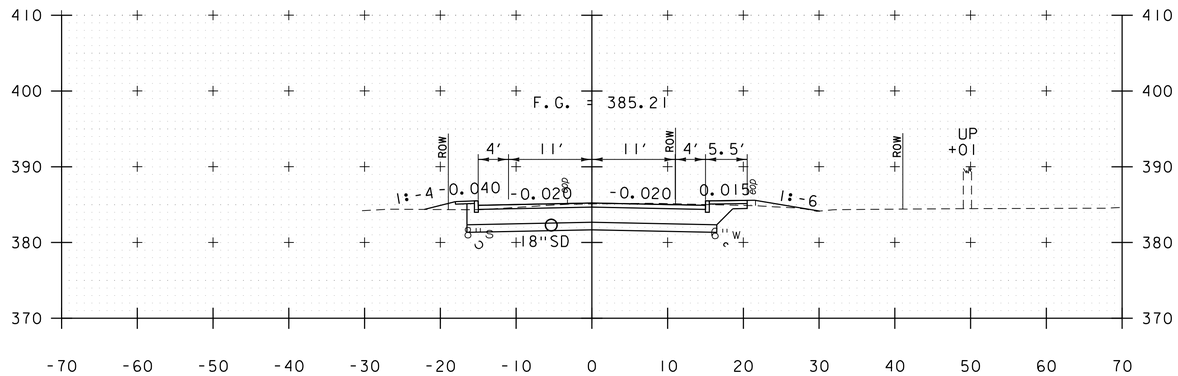

312+00

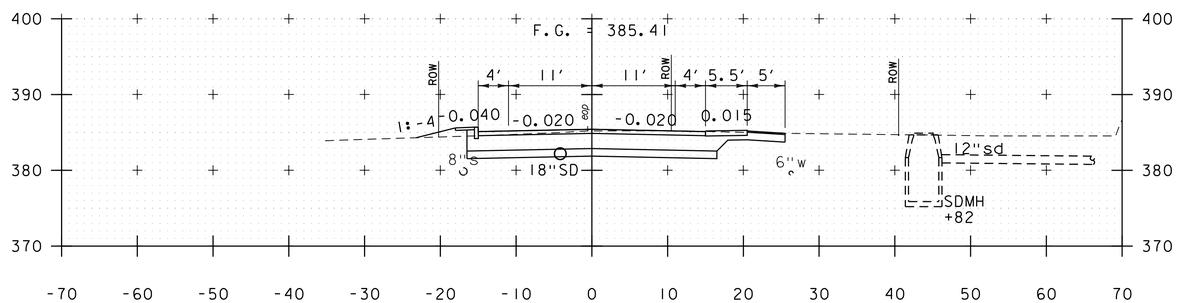

311+63

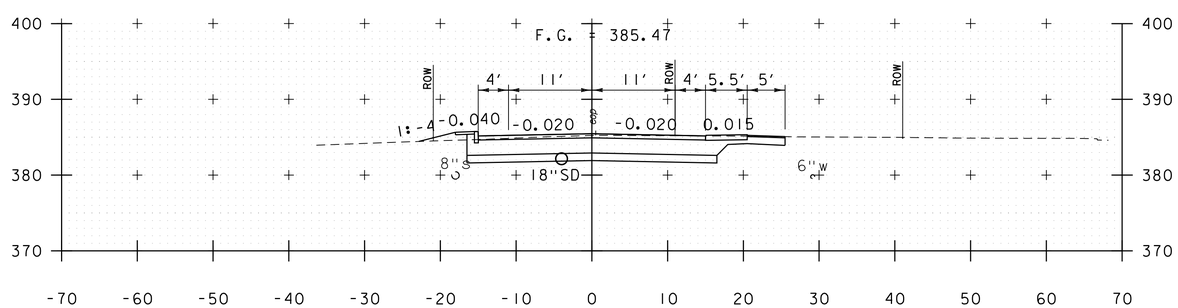

311+50

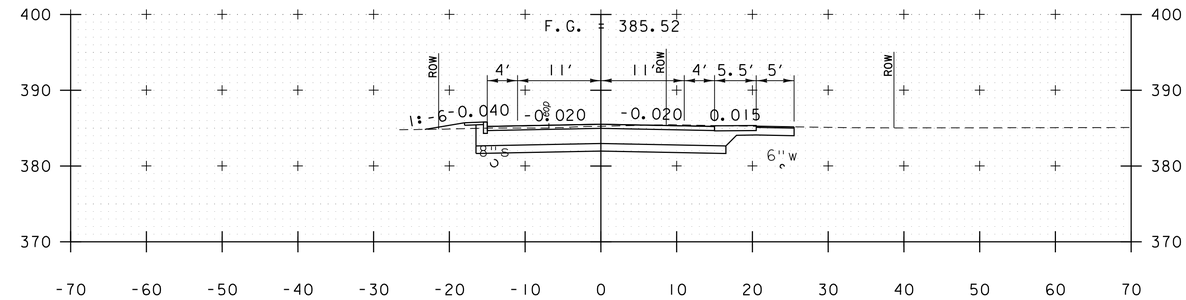

313+50

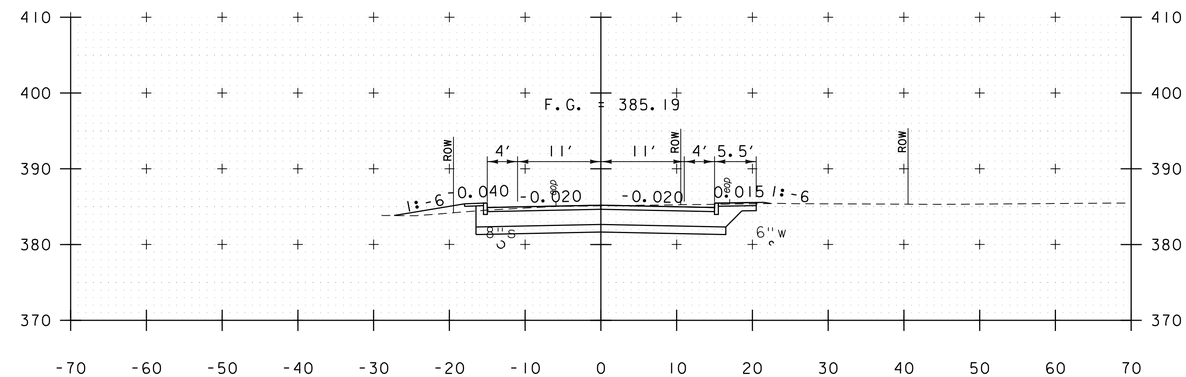

313+00

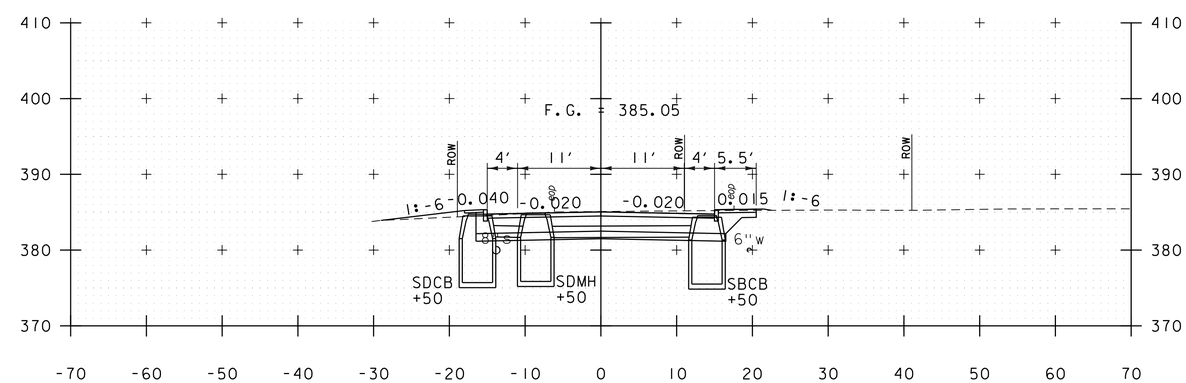

312+50

LEMNAH DRIVE

PROJECT NAME: ST. ALBANS	
PROJECT NUMBER: HPP 8000(17)	
FILE NAME: 57414_XS_LemnahDrive.dgn	PLOT DATE: 3/4/2016
PROJECT LEADER: M.A. COLGAN	DRAWN BY: M.C. SCOTT
DESIGNED BY: M.C. SCOTT	CHECKED BY: ------
CROSS SECTIONS	SHEET 161 OF 230

VHB 57414.00

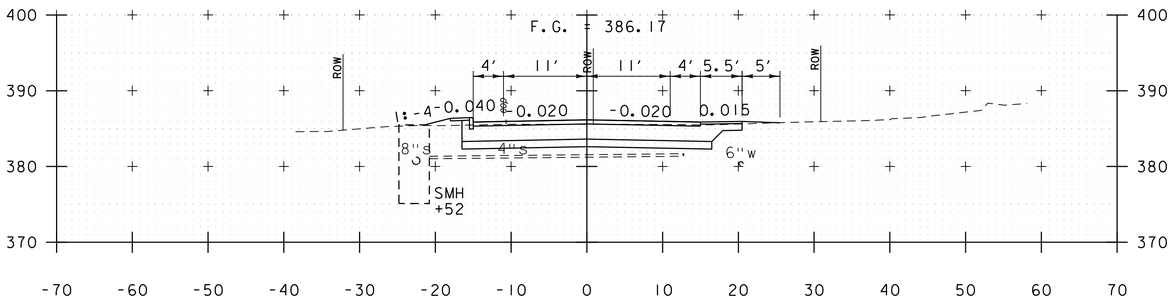

314+50

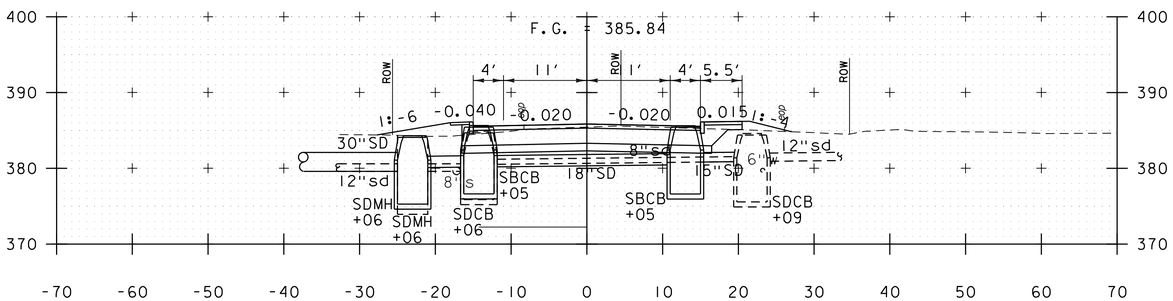

314+00

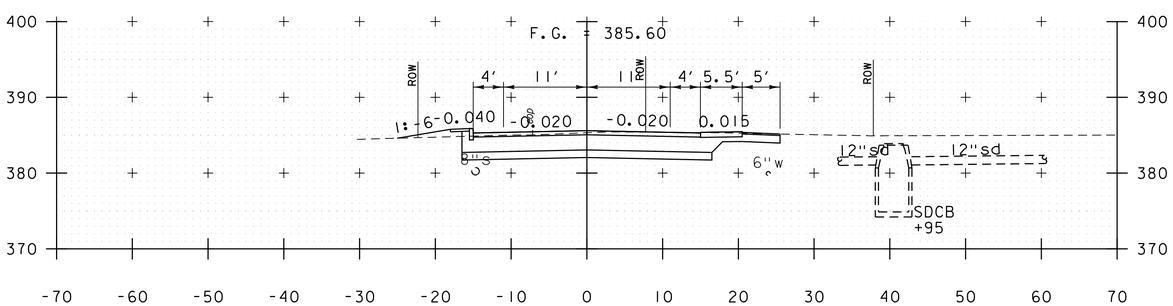

313+63

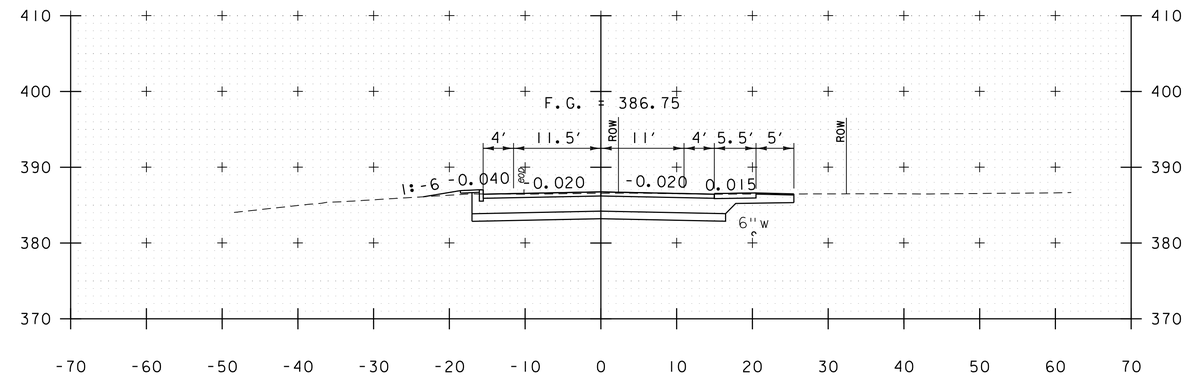

315+50

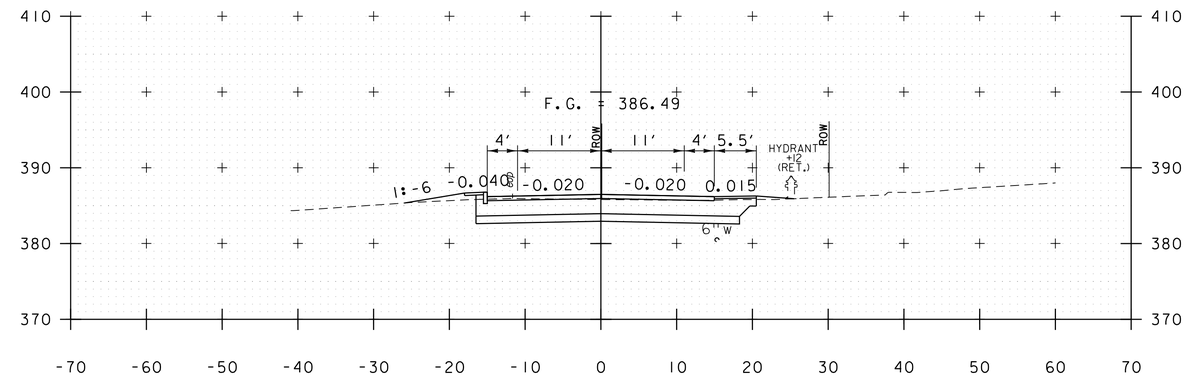

315+00

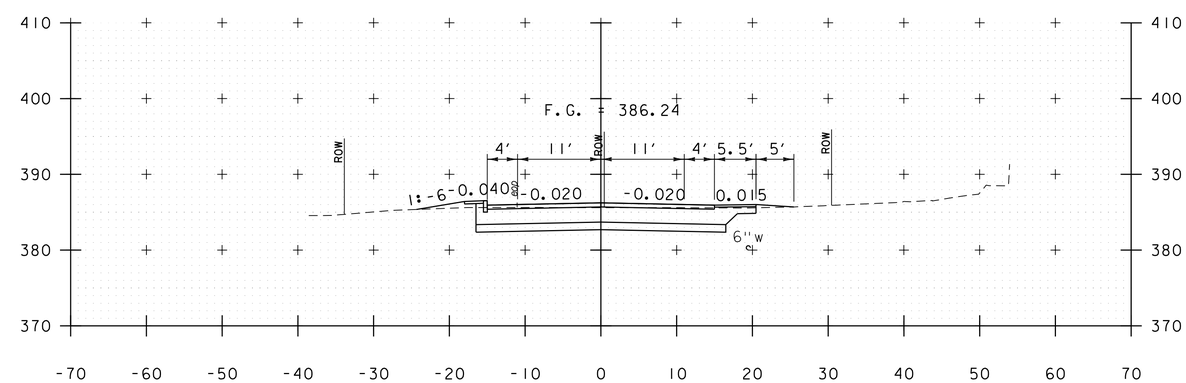

314+61

LEMNAH DRIVE

PROJECT NAME: ST. ALBANS	
PROJECT NUMBER: HPP 8000(17)	
FILE NAME: 57414_XS_LemnahDrive.dgn	PLOT DATE: 3/4/2016
PROJECT LEADER: M.A. COLGAN	DRAWN BY: M.C. SCOTT
DESIGNED BY: M.C. SCOTT	CHECKED BY: ------
CROSS SECTIONS	SHEET 162 OF 230

VHB 57414.00

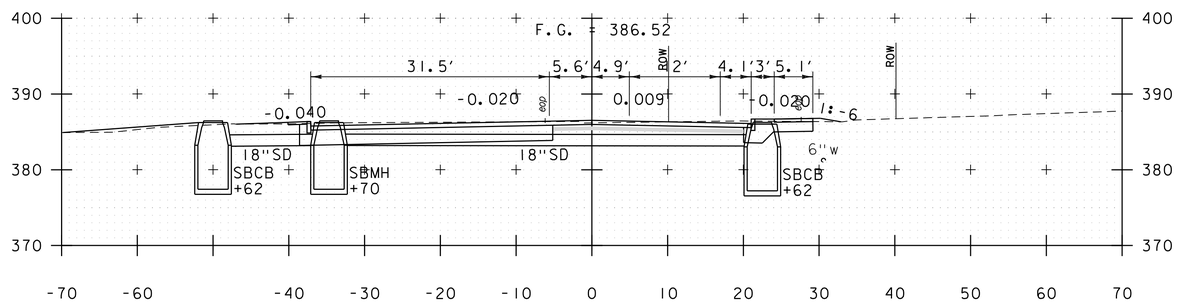

316+50

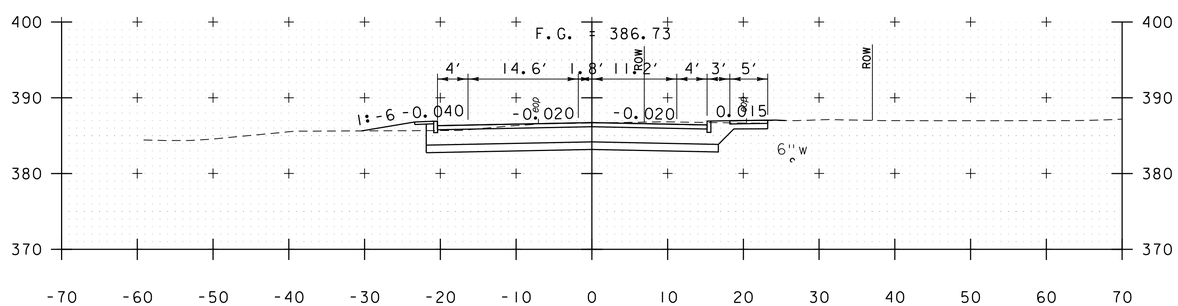

316+00

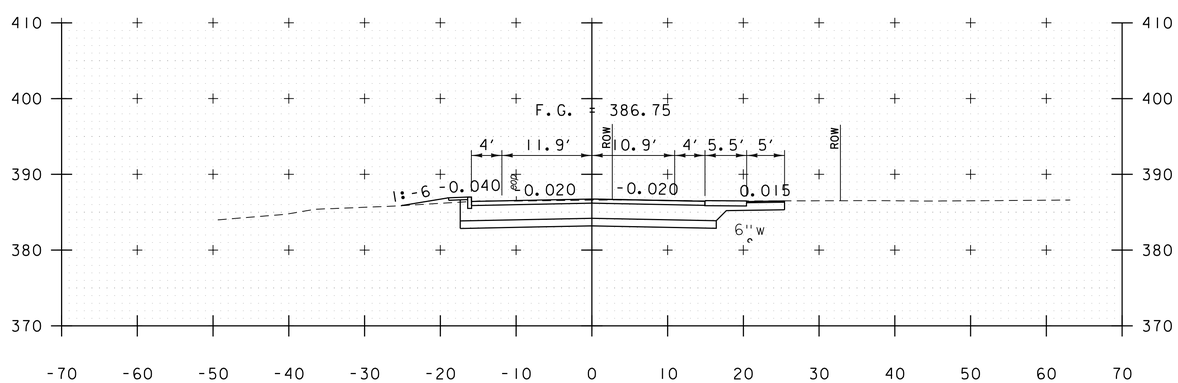

315+55

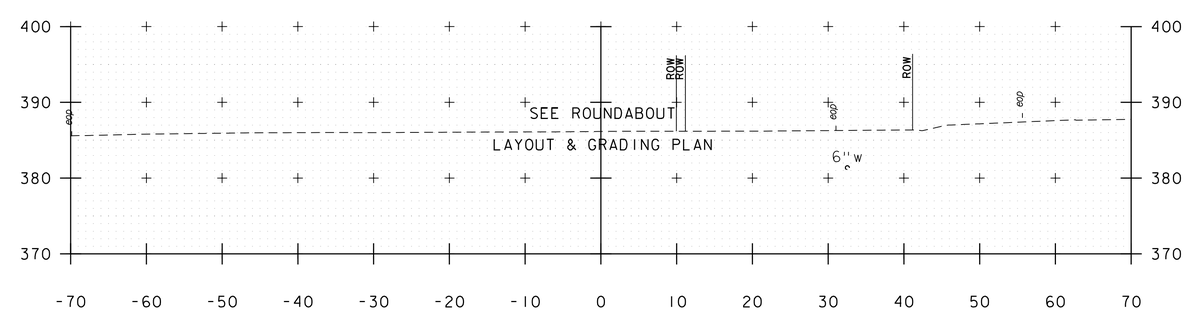

317+00

LEMNAH DRIVE

PROJECT NAME: ST. ALBANS	
PROJECT NUMBER: HPP 8000(17)	
FILE NAME: 57414_XS_LemnahDrive.dgn	PLOT DATE: 3/4/2016
PROJECT LEADER: M.A. COLGAN	DRAWN BY: M.C. SCOTT
DESIGNED BY: M.C. SCOTT	CHECKED BY: ------
CROSS SECTIONS	SHEET 163 OF 230

VHB 57414.00

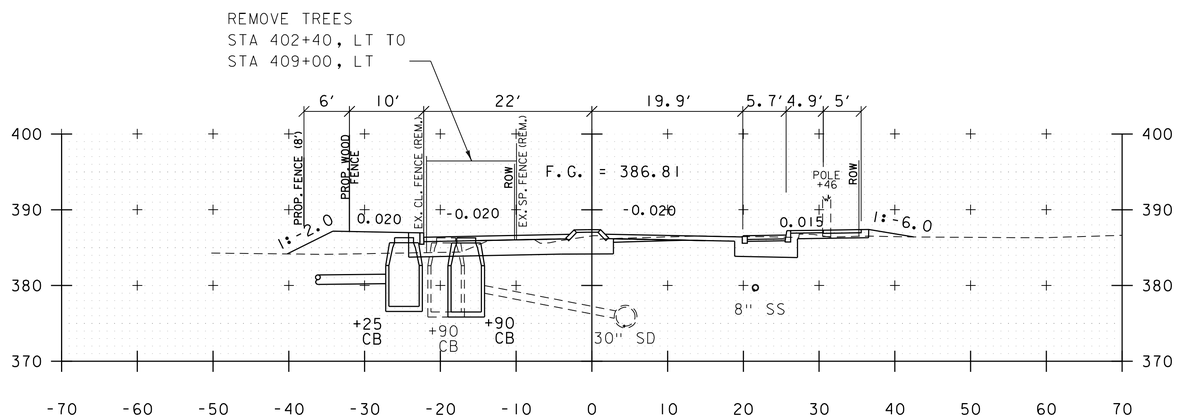

402+50

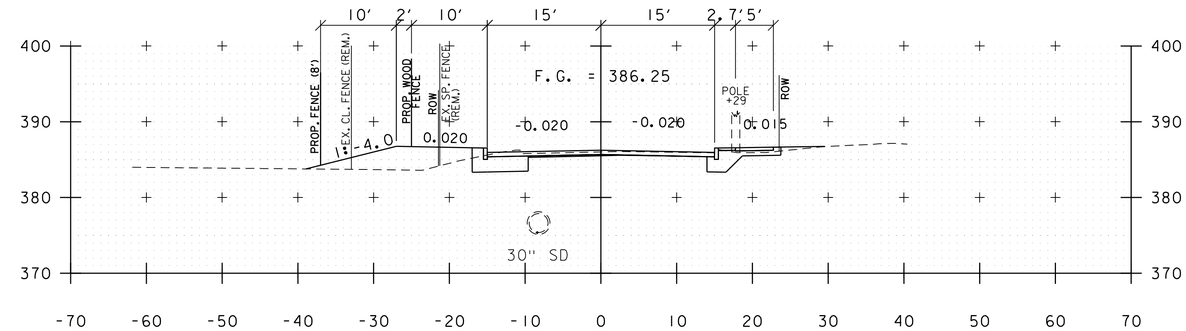

404+00

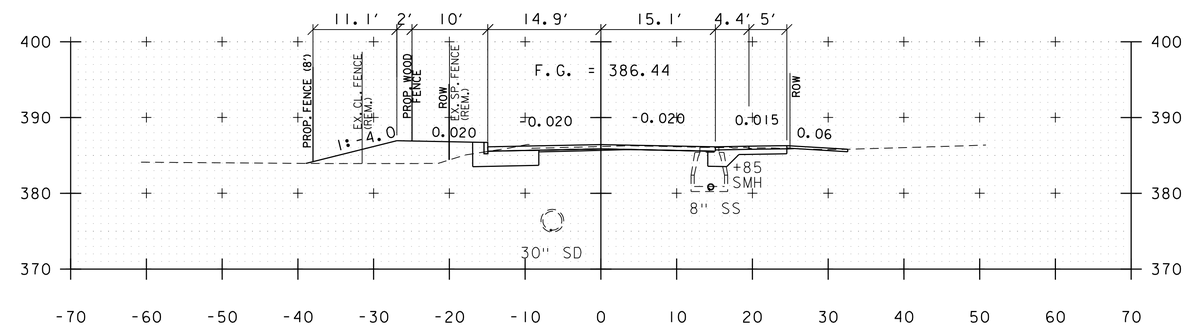

403+50

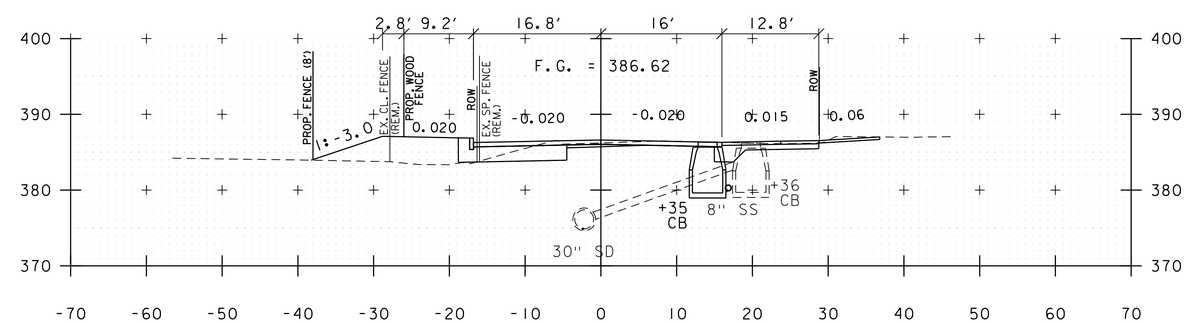

403+00

ALLEN STREET

PROJECT NAME: ST. ALBANS	
PROJECT NUMBER: HPP 8000(17)	
FILE NAME: 57414_XS_AllenCatherine.dgn	PLOT DATE: 3/4/2016
PROJECT LEADER: J.D. SALADINO	DRAWN BY: G.A. GOMEZ
DESIGNED BY: D.M. PECK	CHECKED BY: M.J. SERVETAS
CROSS SECTION SHEET X OF XX	SHEET 164 OF 230

VHB 57414.00

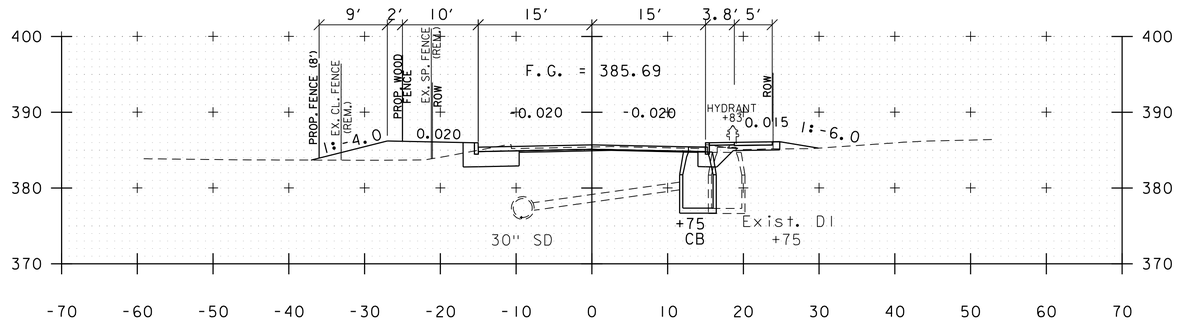

405+50

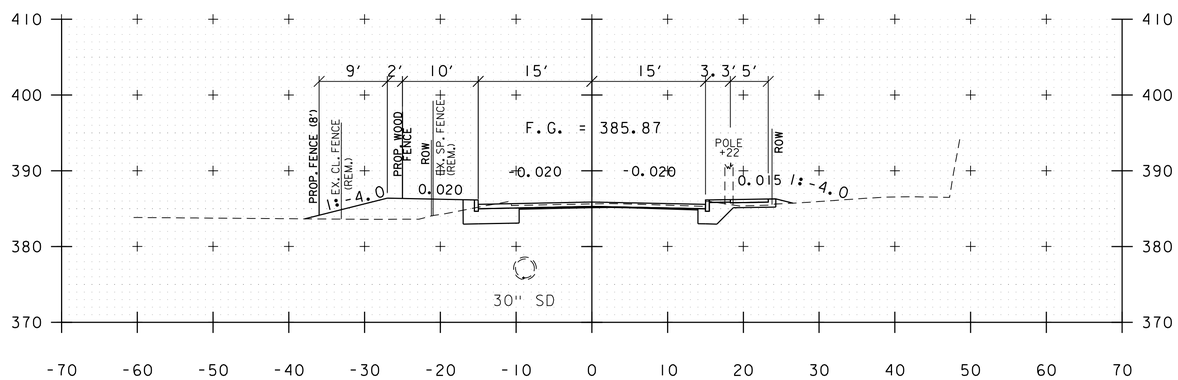

405+00

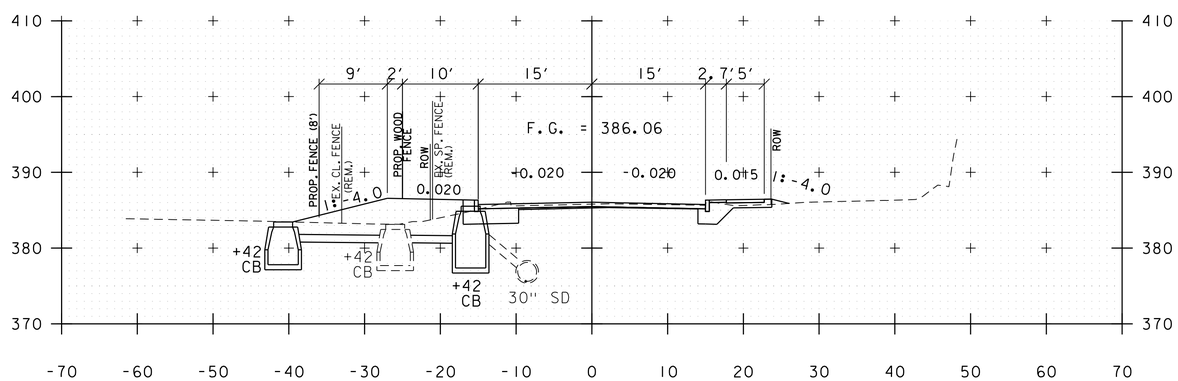

404+50

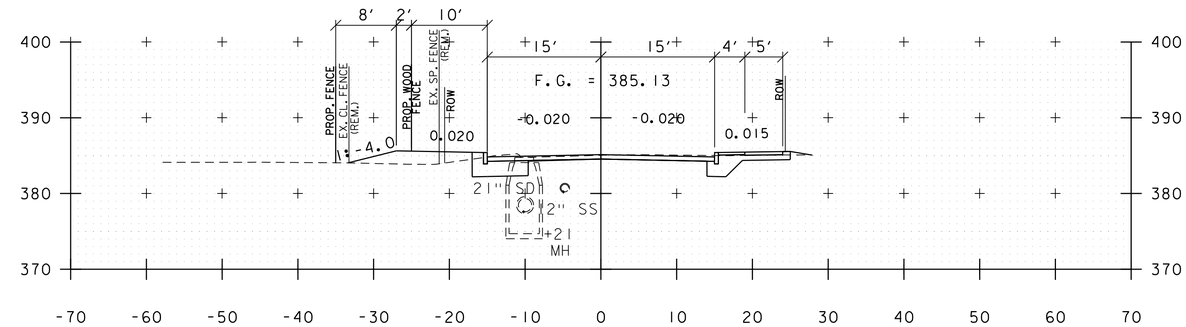

407+00

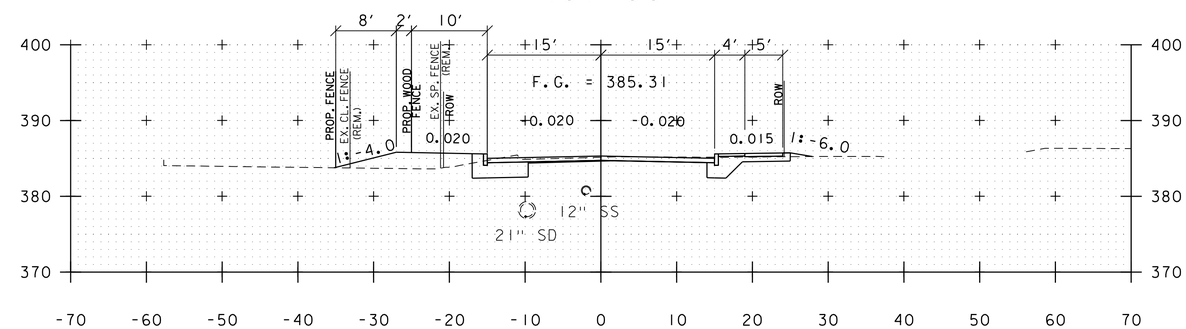

406+50

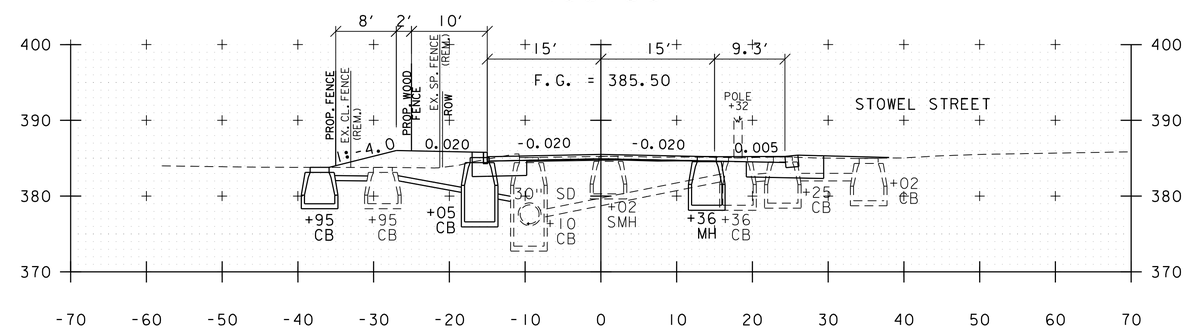

406+00

ALLEN STREET

PROJECT NAME: ST. ALBANS	
PROJECT NUMBER: HPP 8000(17)	
FILE NAME: 57414_XS_AllenCatherine.dgn	PLOT DATE: 3/4/2016
PROJECT LEADER: J.D. SALADINO	DRAWN BY: G.A. GOMEZ
DESIGNED BY: D.M. PECK	CHECKED BY: M.J. SERVETAS
CROSS SECTION SHEET X OF XX	SHEET 165 OF 230

VHB 57414.00

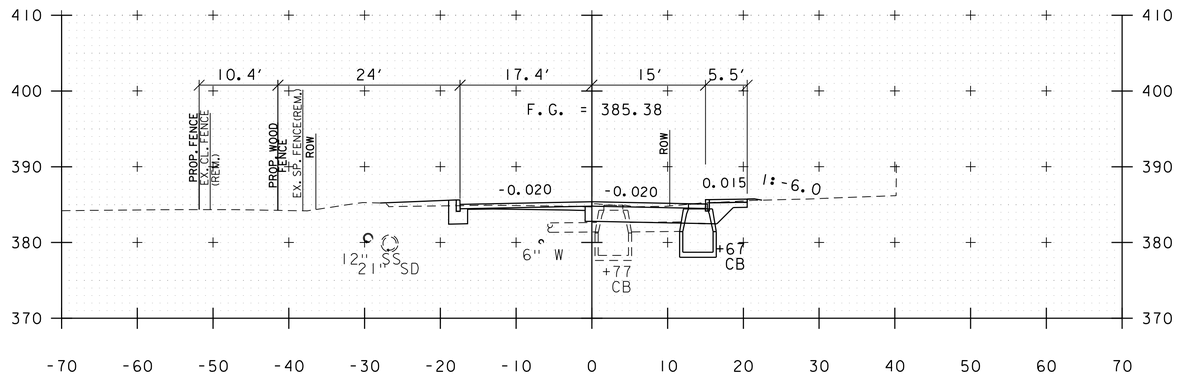

408+50

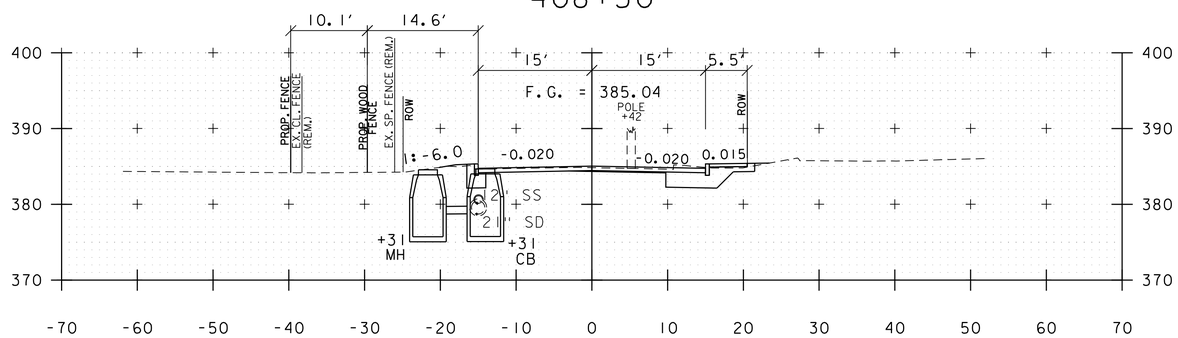

408+00

407+50

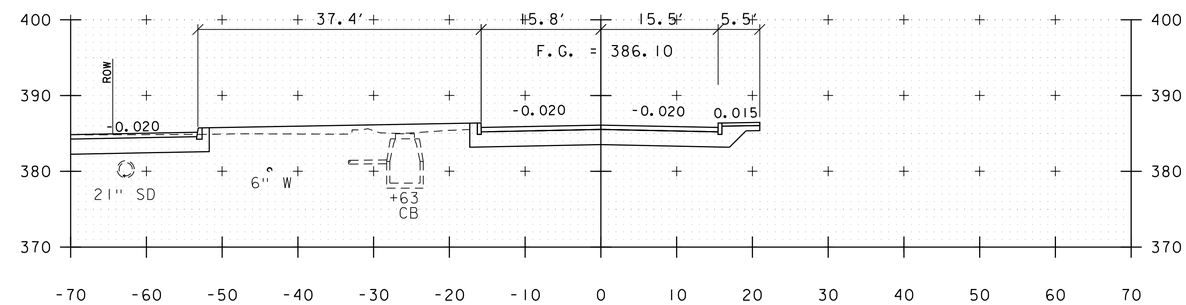

409+50

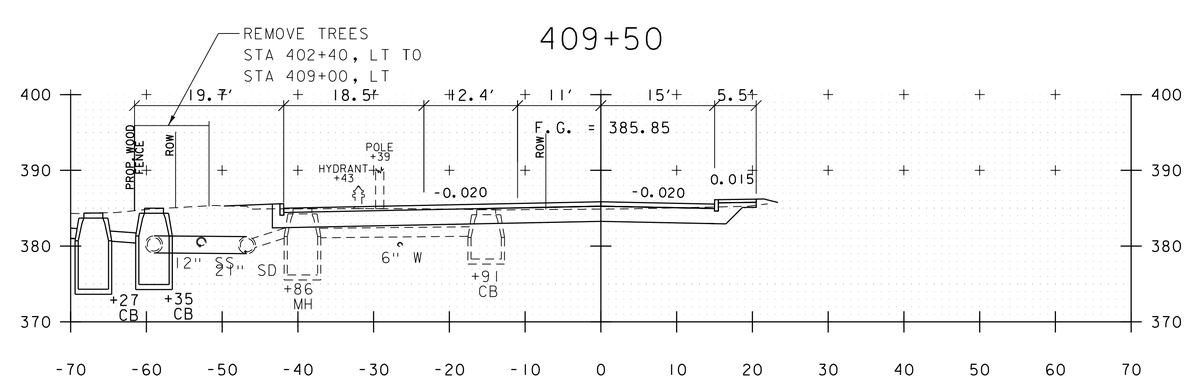

409+00

ALLEN STREET

PROJECT NAME:	ST. ALBANS
PROJECT NUMBER:	HPP 8000(17)

FILE NAME: 57414_XS_AllenCatherine.dgn	PLOT DATE: 3/4/2016
PROJECT LEADER: J.D. SALADINO	DRAWN BY: G.A. GOMEZ
DESIGNED BY: D.M. PECK	CHECKED BY: M.J. SERVETAS
CROSS SECTION SHEET X OF XX	SHEET 166 OF 230

vhb

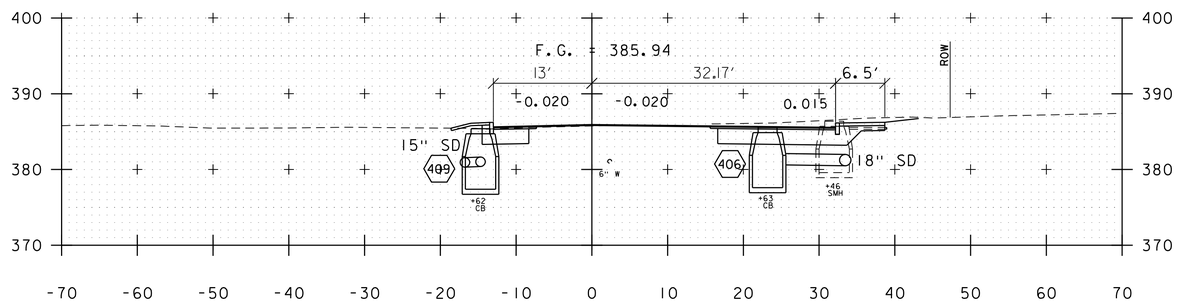

410+50

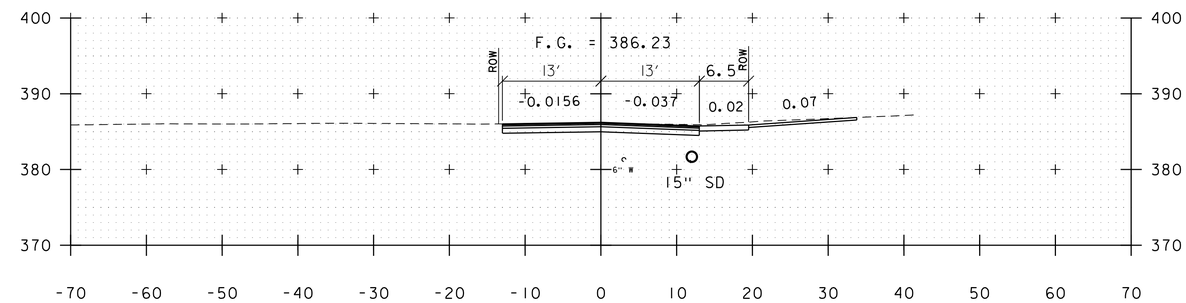

411+25

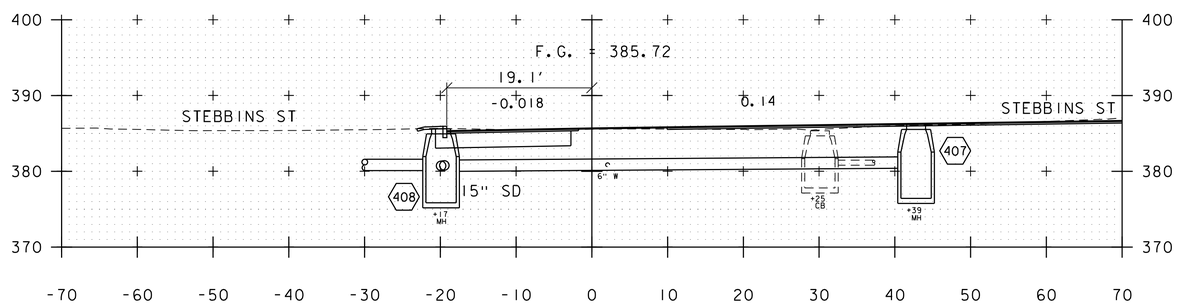

410+25

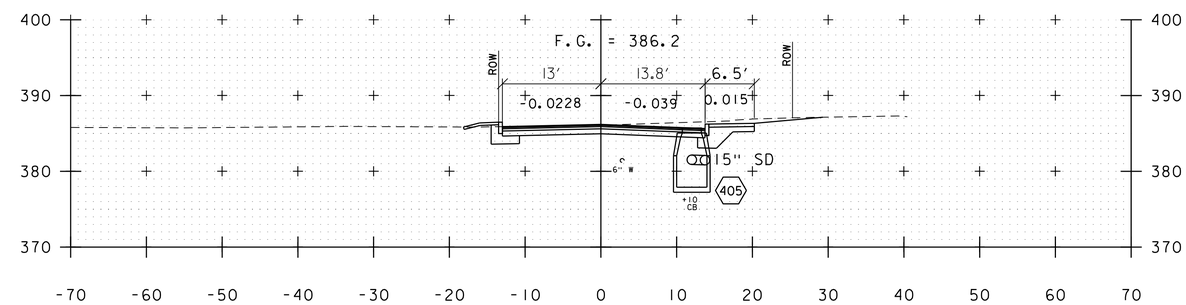

411+00

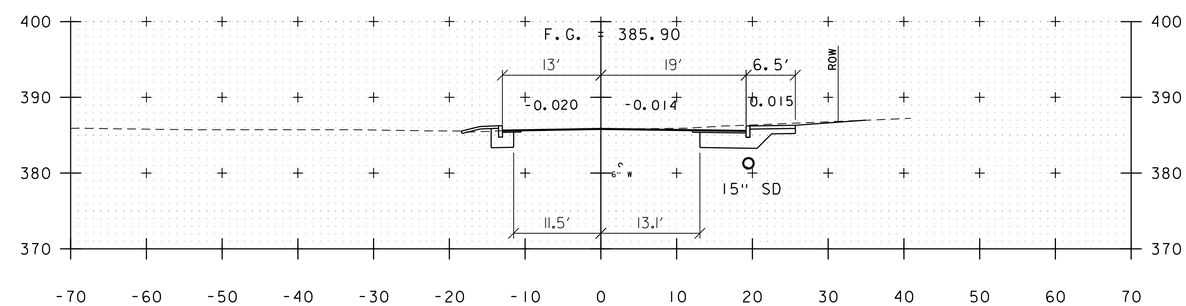

410+75

CATHERINE STREET

PROJECT NAME: ST. ALBANS	
PROJECT NUMBER: HPP 8000(17)	
FILE NAME: $$FILES$$	PLOT DATE: 3/4/2016
PROJECT LEADER: J.D. SALADINO	DRAWN BY: G.A. GOMEZ
DESIGNED BY: G.A. GOMEZ	CHECKED BY: M.J. SERVETAS
CROSS SECTION SHEET X OF XX	SHEET 167 OF 230

VHB 57414.00

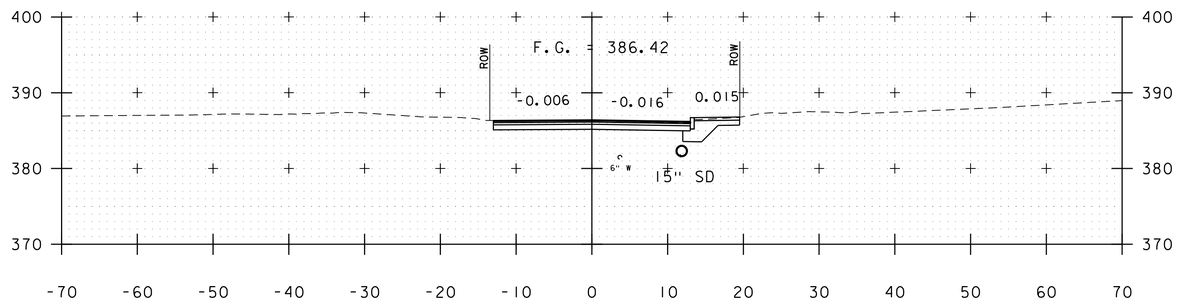

412+00

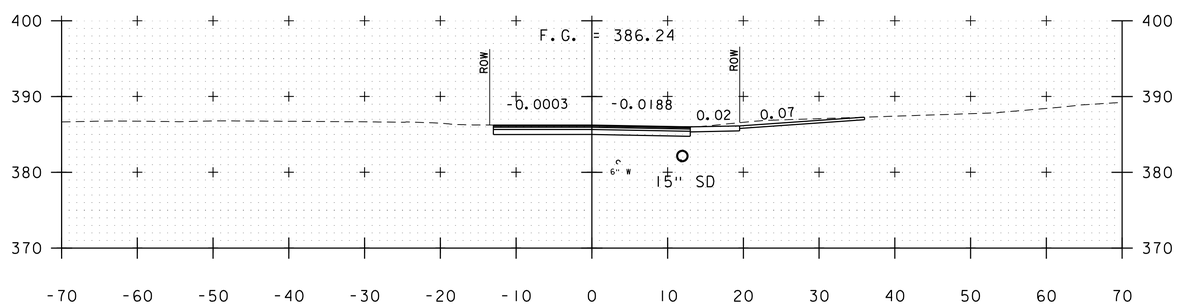

411+75

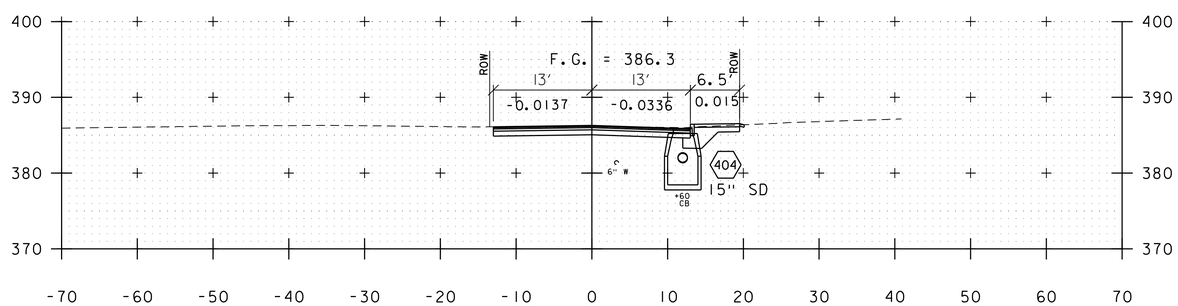

411+50

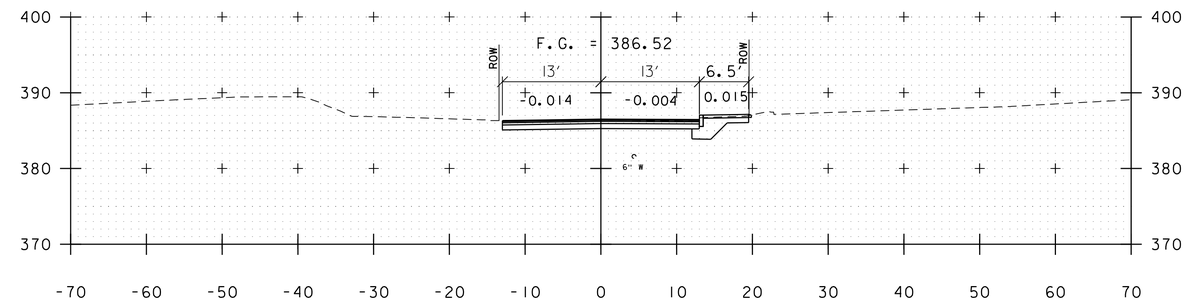

412+75

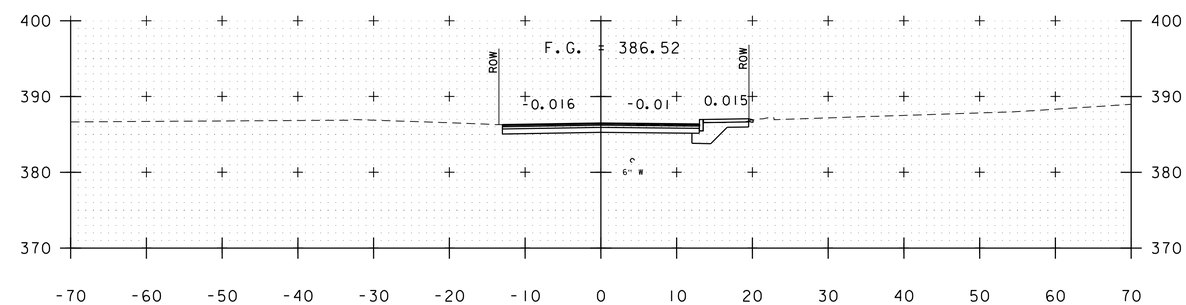

412+50

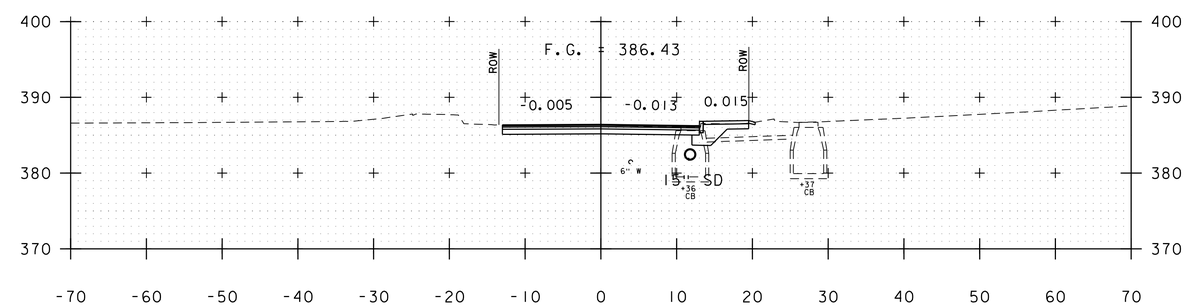

412+25

CATHERINE STREET

PROJECT NAME: ST. ALBANS	
PROJECT NUMBER: HPP 8000(17)	
FILE NAME: $$FILES$$	PLOT DATE: 3/4/2016
PROJECT LEADER: J.D. SALADINO	DRAWN BY: G.A. GOMEZ
DESIGNED BY: G.A. GOMEZ	CHECKED BY: M.J. SERVETAS
CROSS SECTION SHEET X OF XX	SHEET 168 OF 230

VHB 57414.00

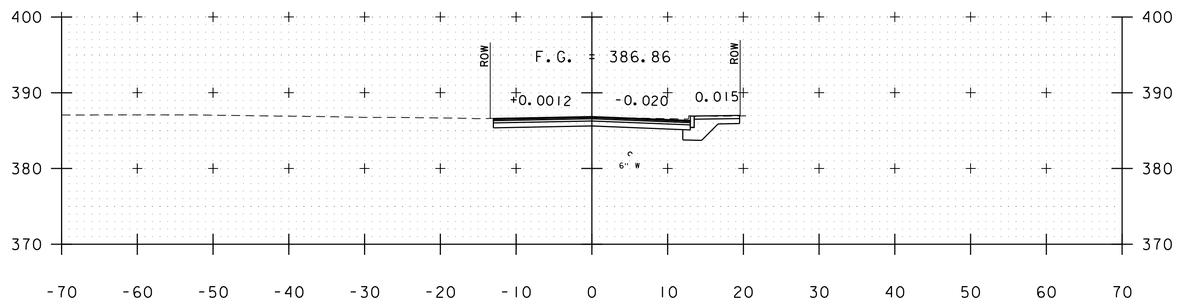

413+50

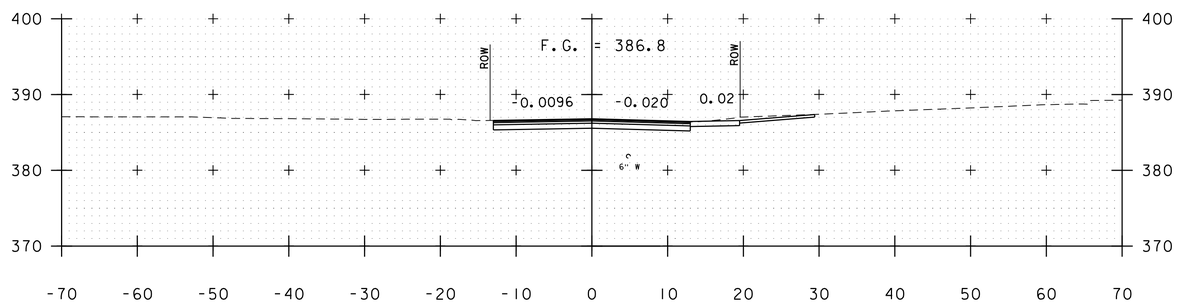

413+25

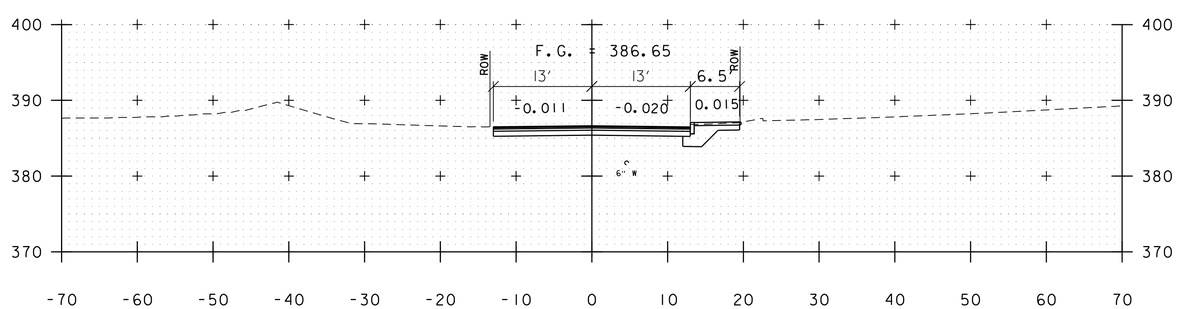

413+00

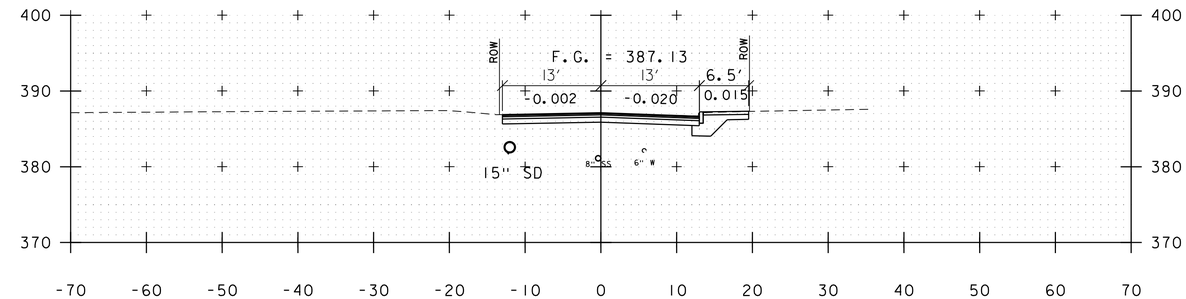

414+25

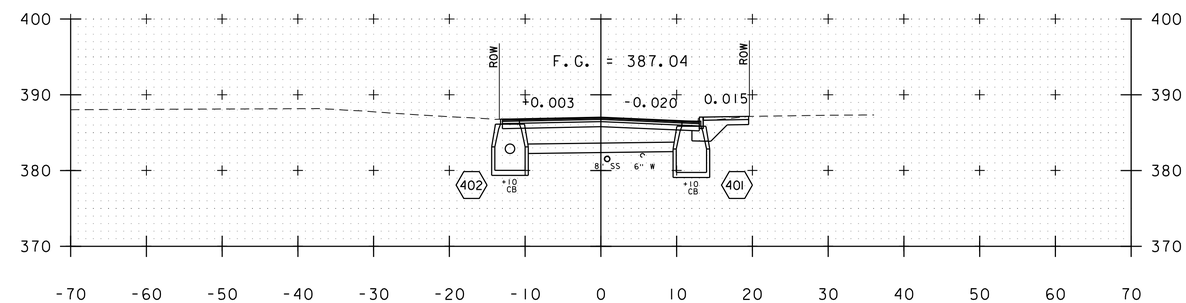

414+00

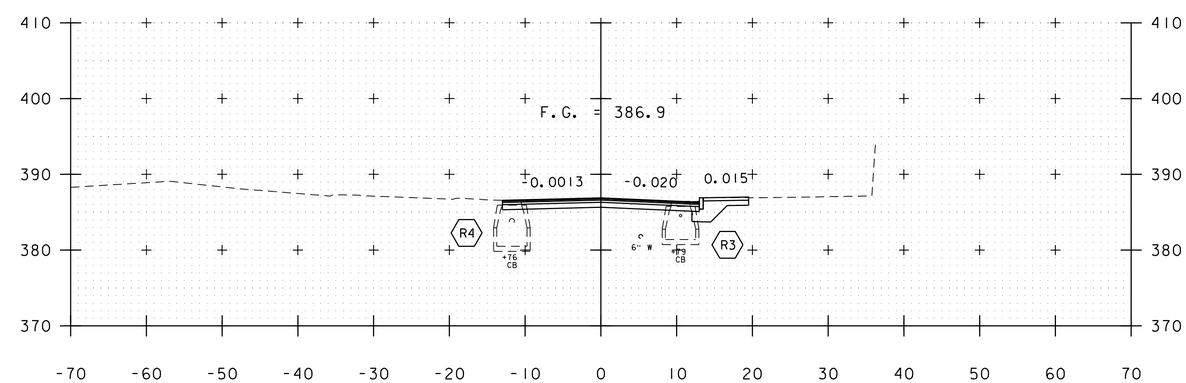

413+75

CATHERINE STREET

PROJECT NAME: ST. ALBANS	
PROJECT NUMBER: HPP 8000(17)	
FILE NAME: $$FILES$$	PLOT DATE: 3/4/2016
PROJECT LEADER: J.D. SALADINO	DRAWN BY: G.A. GOMEZ
DESIGNED BY: G.A. GOMEZ	CHECKED BY: M.J. SERVETAS
CROSS SECTION SHEET X OF XX	SHEET 169 OF 230

VHB 57414.00

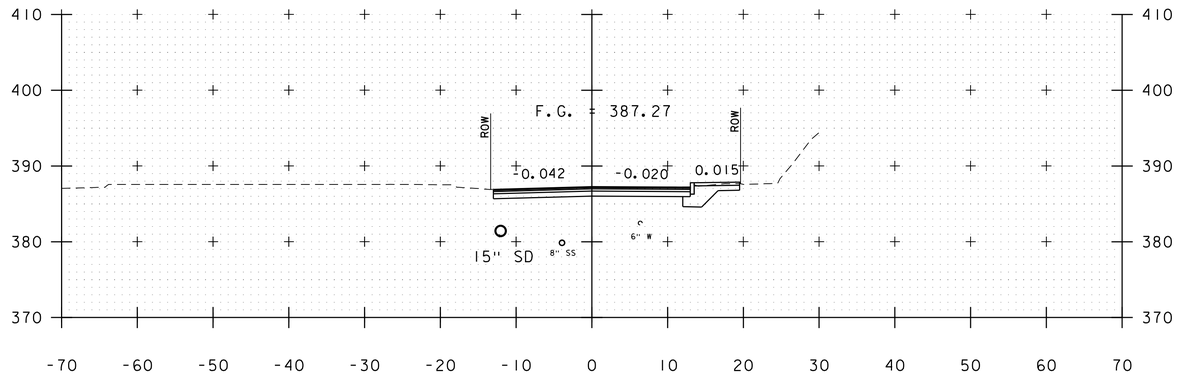

415+00

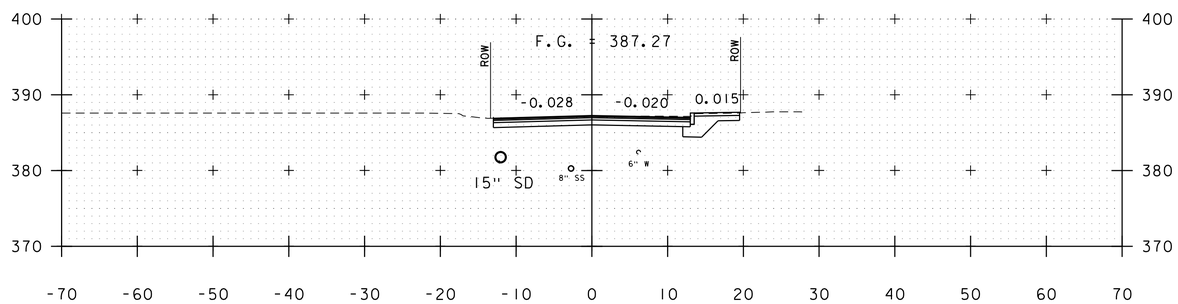

414+75

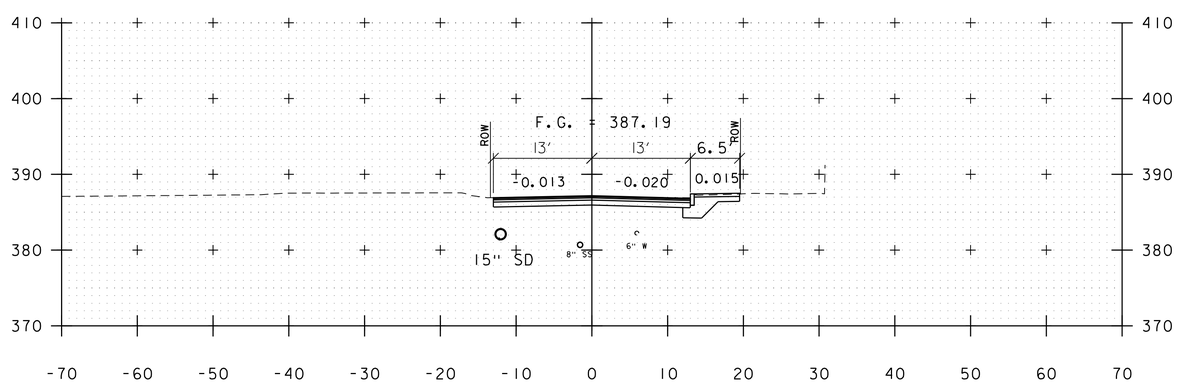

414+50

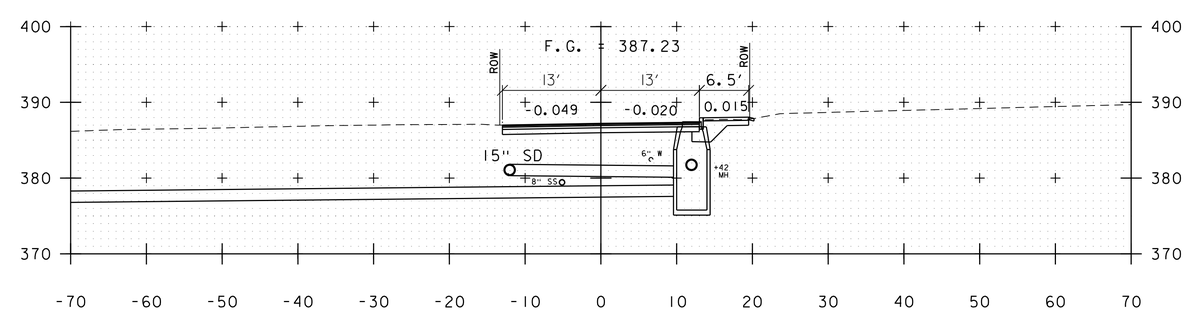

415+25

CATHERINE STREET

PROJECT NAME: ST. ALBANS	
PROJECT NUMBER: HPP 8000(17)	
FILE NAME: $$FILES$$	PLOT DATE: 3/4/2016
PROJECT LEADER: J.D. SALADINO	DRAWN BY: G.A. GOMEZ
DESIGNED BY: G.A. GOMEZ	CHECKED BY: M.J. SERVETAS
CROSS SECTION SHEET X OF XX	SHEET 170 OF 230

VHB 57414.00

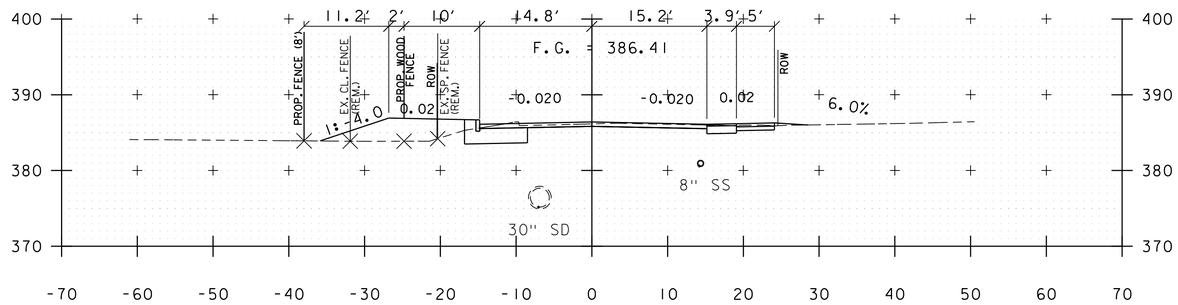

403+58

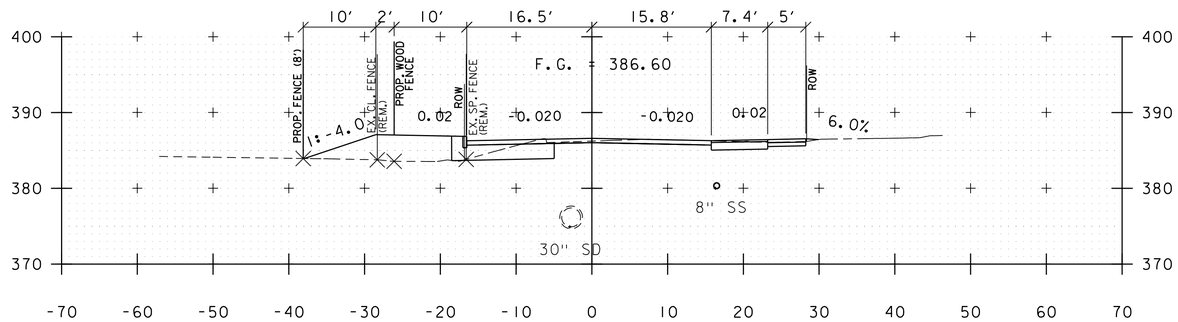

403+05

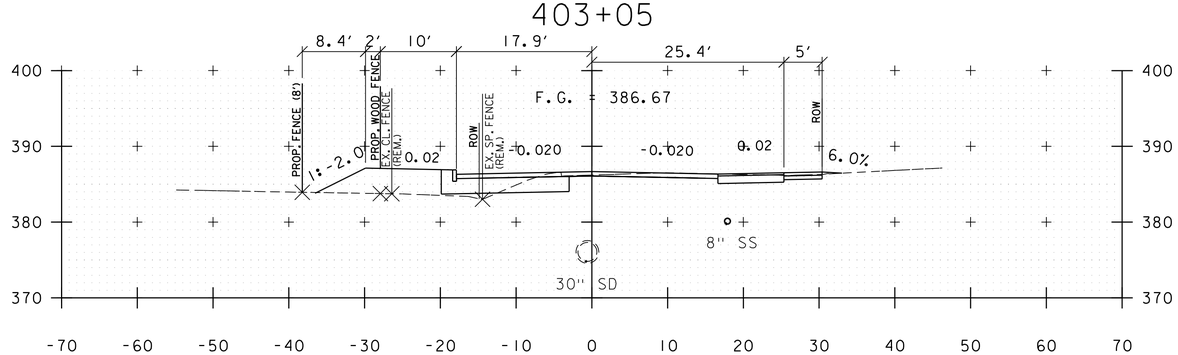

402+86

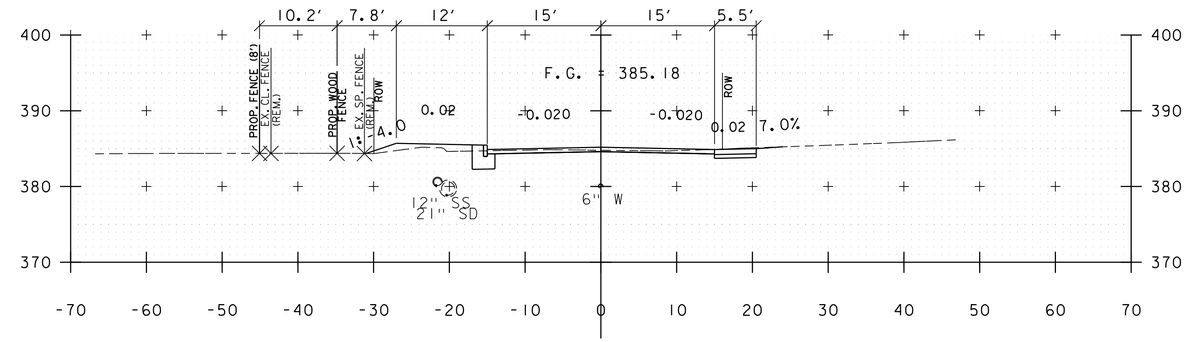

408+26

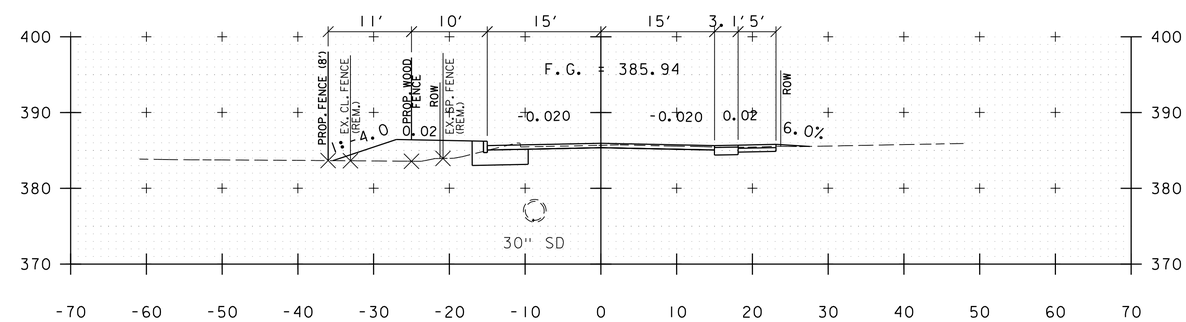

404+83

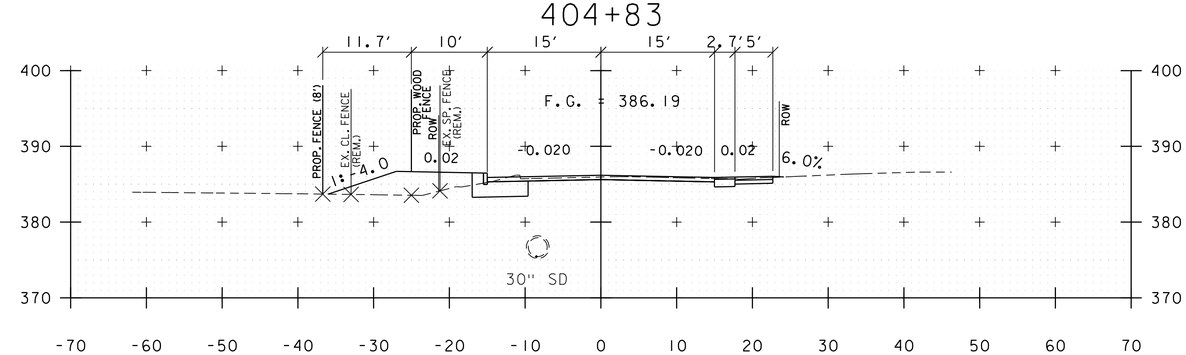

404+15

STA. 402+86 TO STA. 408+26

PROJECT NAME: ST. ALBANS	
PROJECT NUMBER: HPP 8000(17)	
FILE NAME: ppms*/Section/------.dgn	PLOT DATE: 3/4/2016
PROJECT LEADER: M.A. COLGAN	DRAWN BY: G.A. GOMEZ
DESIGNED BY: D.M. PECK	CHECKED BY: ------
CROSS SECTION SHEET X OF XX	SHEET 171 OF 230

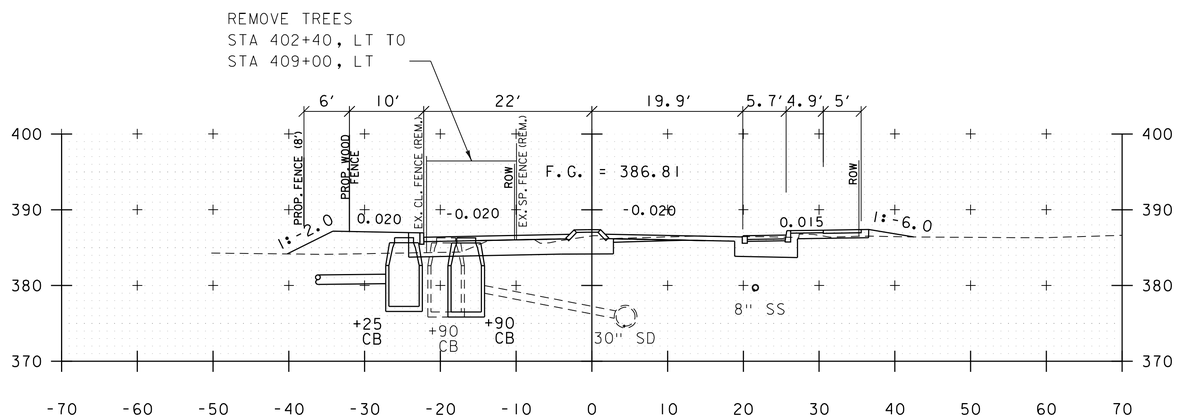

402+50

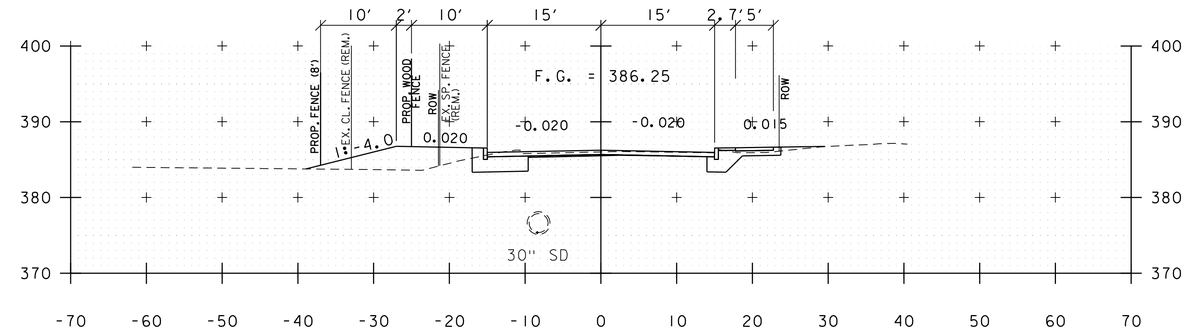

404+00

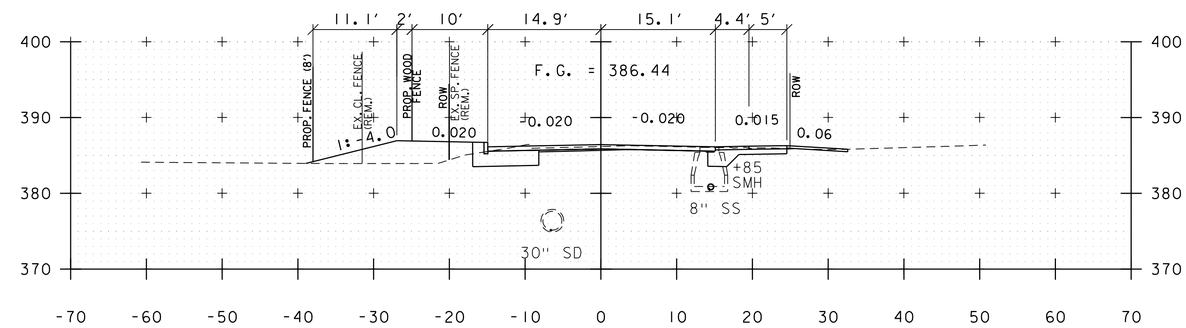

403+50

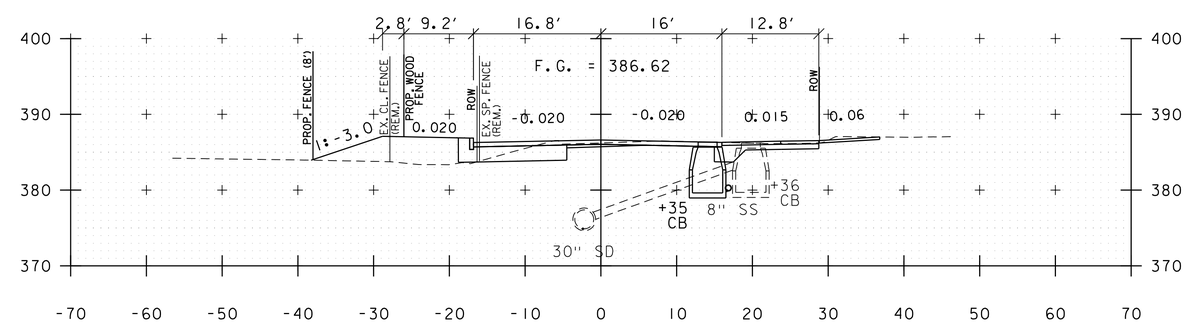

403+00

ALLEN STREET

PROJECT NAME:	ST. ALBANS
PROJECT NUMBER:	HPP 8000(17)

FILE NAME: 57414_XS_AllenDriveways.dgn	PLOT DATE: 3/4/2016
PROJECT LEADER: J.D. SALADINO	DRAWN BY: G.A. GOMEZ
DESIGNED BY: D.M. PECK	CHECKED BY: M.J. SERVETAS
CROSS SECTION SHEET X OF XX	SHEET 172 OF 230

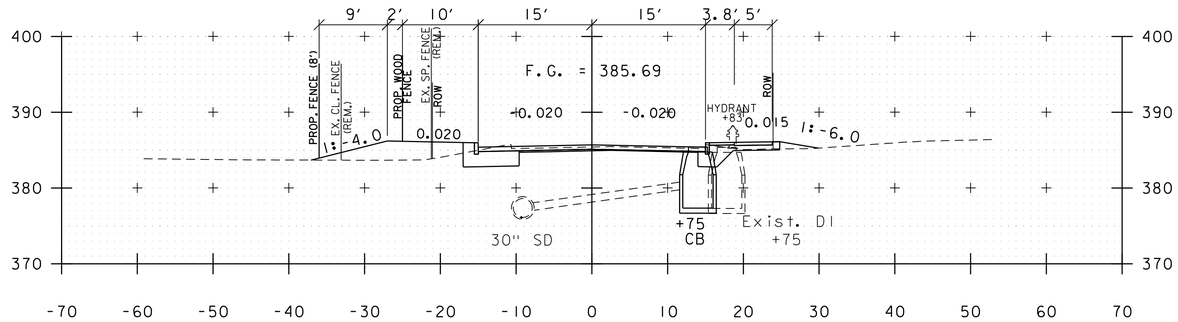

405+50

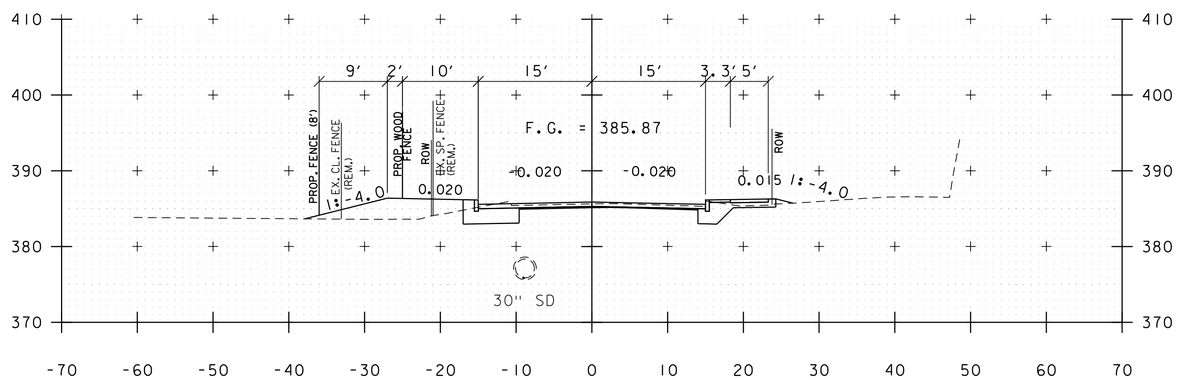

405+00

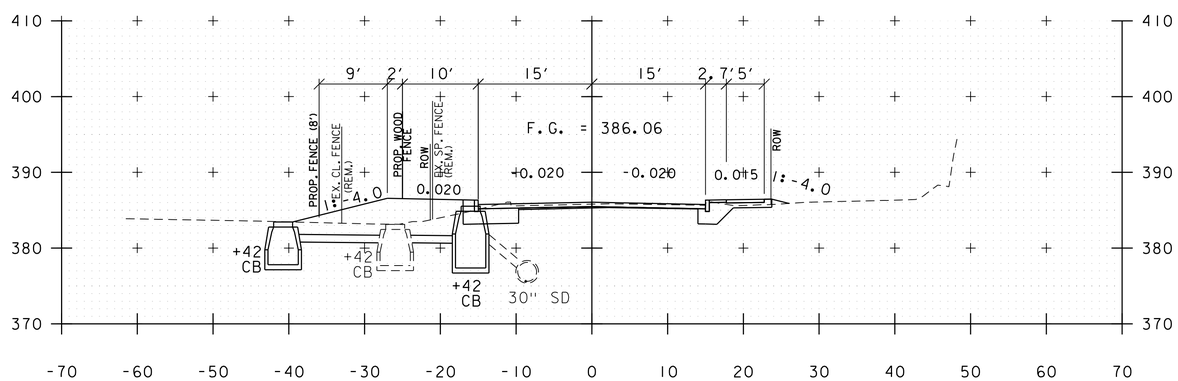

404+50

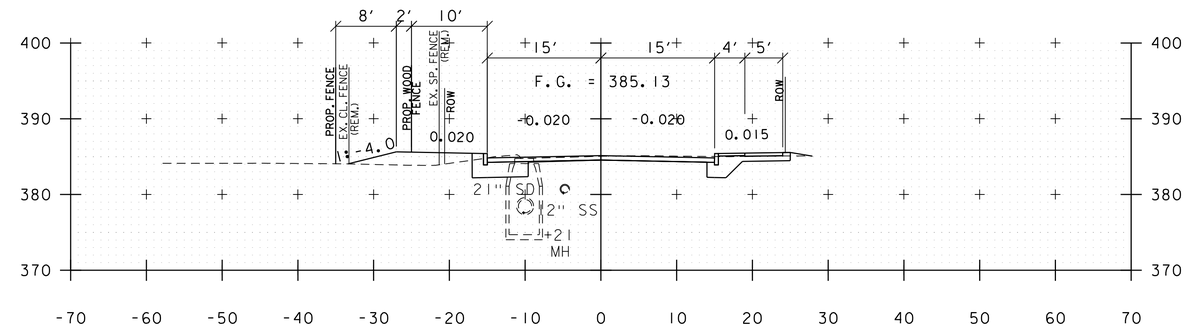

407+00

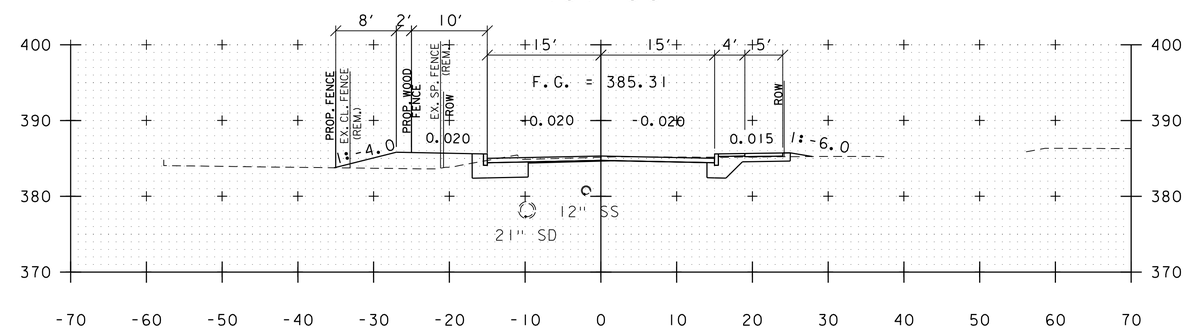

406+50

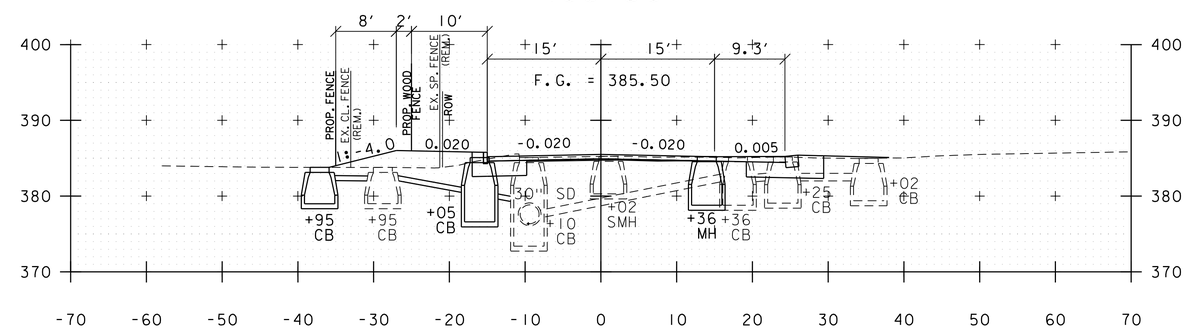

406+00

ALLEN STREET

PROJECT NAME: ST. ALBANS	
PROJECT NUMBER: HPP 8000(17)	
FILE NAME: 57414_XS_AllenDriveways.dgn	PLOT DATE: 3/4/2016
PROJECT LEADER: J.D. SALADINO	DRAWN BY: G.A. GOMEZ
DESIGNED BY: D.M. PECK	CHECKED BY: M.J. SERVETAS
CROSS SECTION SHEET X OF XX	SHEET 173 OF 230

VHB 57414.00

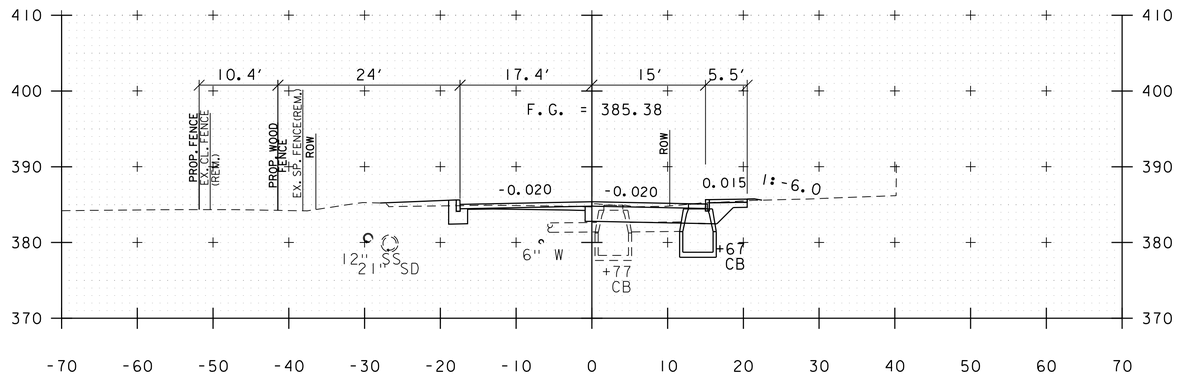

408+50

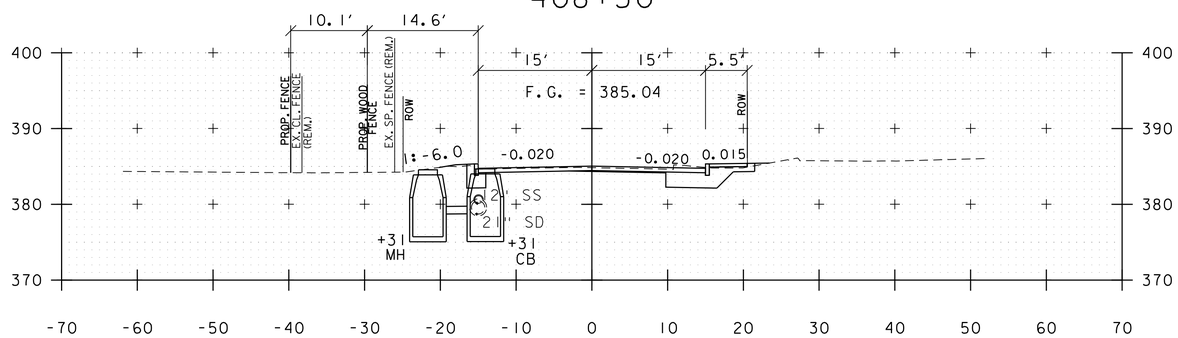

408+00

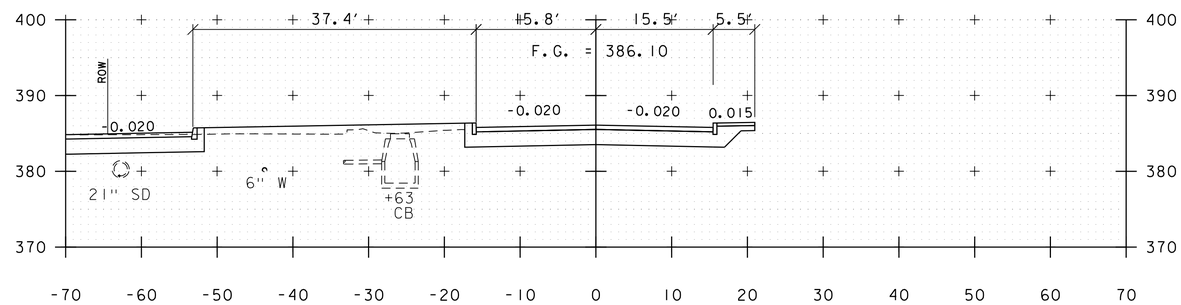

409+50

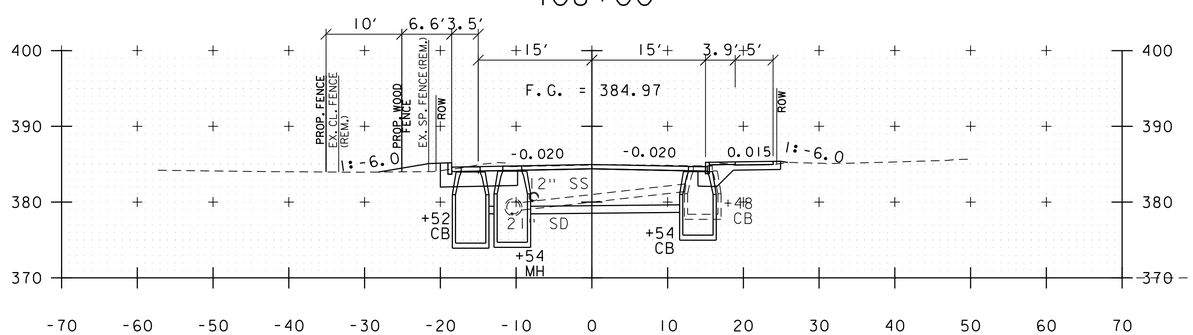

407+50

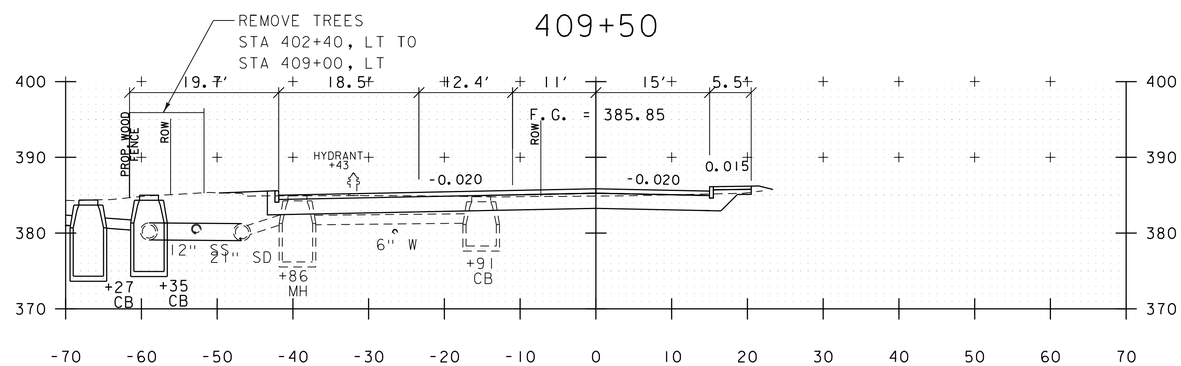

409+00

ALLEN STREET

PROJECT NAME: ST. ALBANS	
PROJECT NUMBER: HPP 8000(17)	
FILE NAME: 57414_XS_AllenDriveways.dgn	PLOT DATE: 3/4/2016
PROJECT LEADER: J.D. SALADINO	DRAWN BY: G.A. GOMEZ
DESIGNED BY: D.M. PECK	CHECKED BY: M.J. SERVETAS
CROSS SECTION SHEET X OF XX	SHEET 174 OF 230

VHB 57414.00

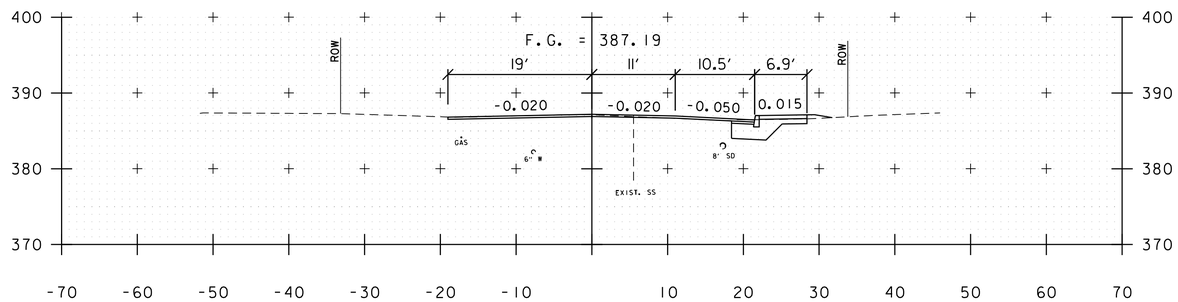

STATION 500+28
BEGIN CONSTRUCTION

500+50

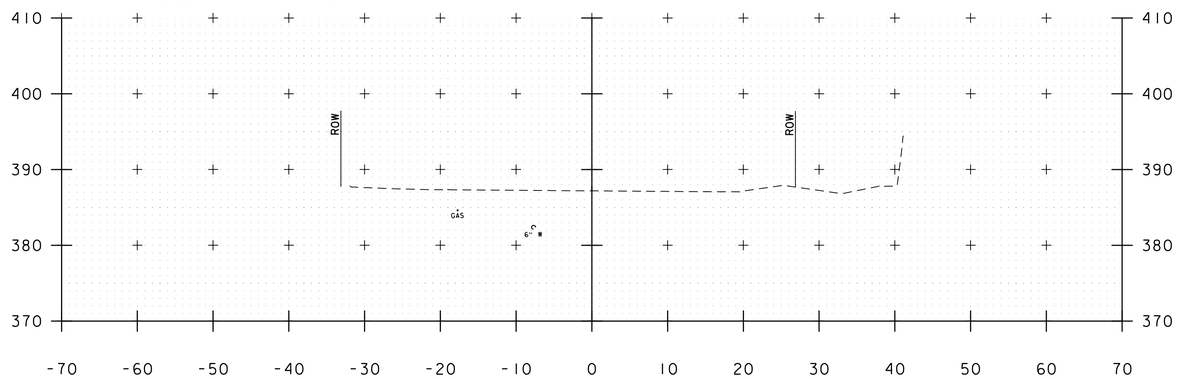

500+25

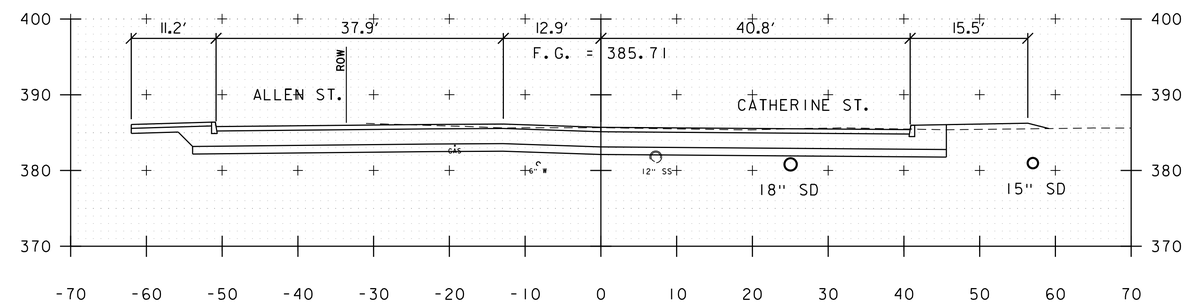

501+25

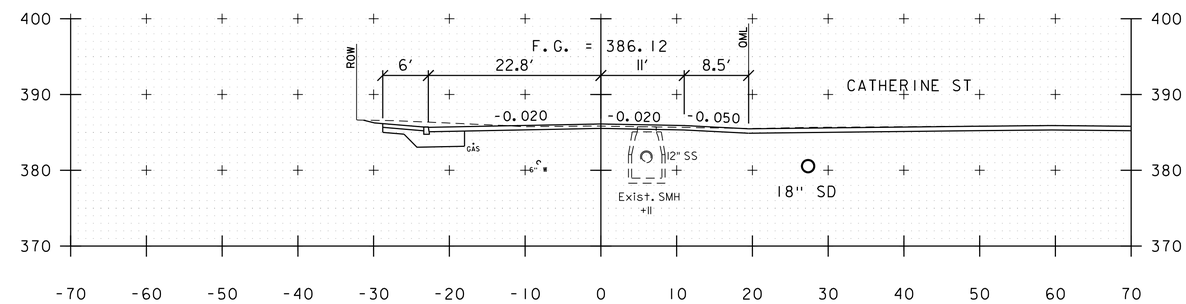

501+00

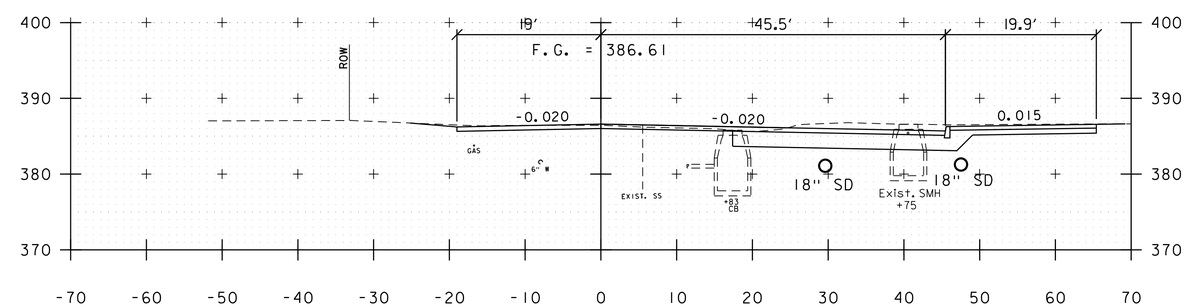

500+75

STEBBINS/MARKET STREET

PROJECT NAME: ST. ALBANS	
PROJECT NUMBER: HPP 8000(17)	
FILE NAME: 57414_XS_Market.dgn	PLOT DATE: 3/4/2016
PROJECT LEADER: J.D. SALADINO	DRAWN BY: G.A. GOMEZ
DESIGNED BY: G.A. GOMEZ	CHECKED BY: M.J. SERVETAS
CROSS SECTIONS	SHEET 175 OF 230

VHB 57414.00

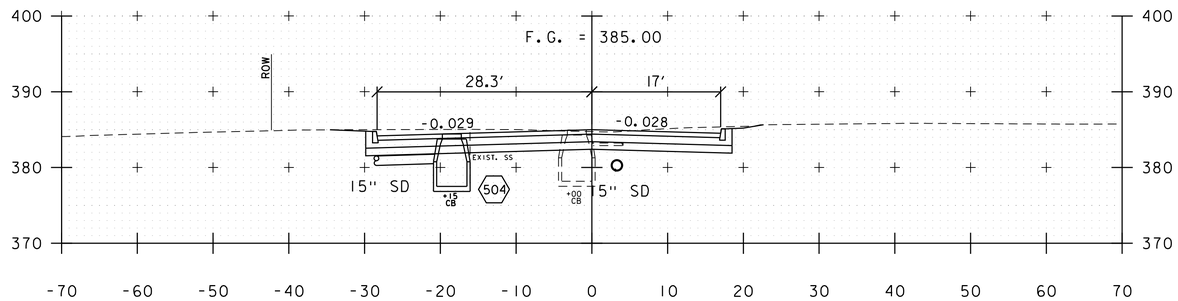

502+00

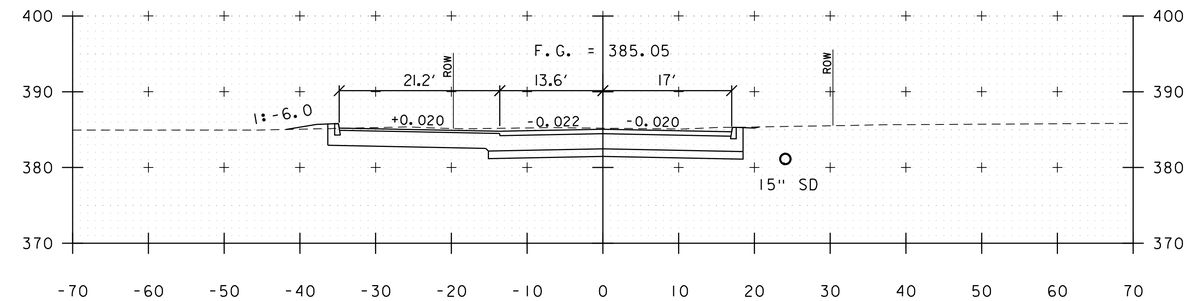

502+75

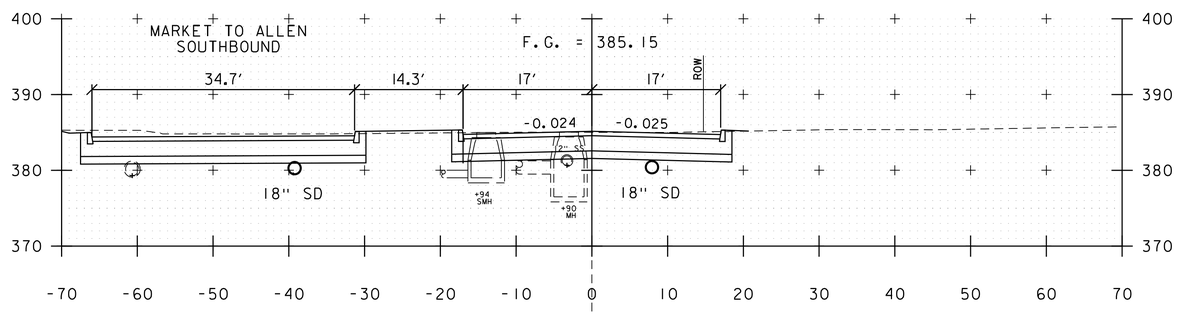

501+75

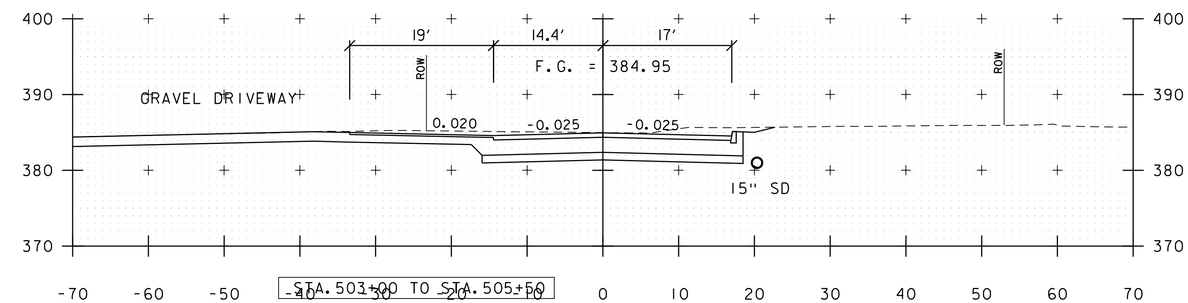

502+50

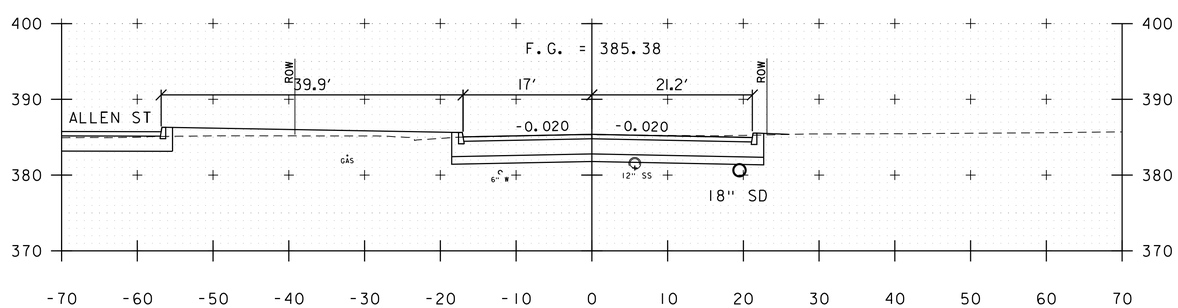

501+50

STATION 501+40
BEGIN FULL DEPTH
CONSTRUCTION

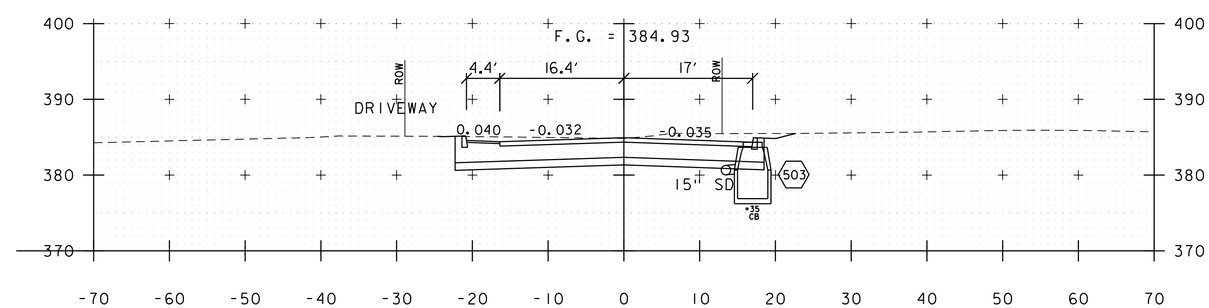

502+25

STEBBINS/MARKET STREET

PROJECT NAME: ST. ALBANS	
PROJECT NUMBER: HPP 8000(17)	
FILE NAME: 57414_XS_Market.dgn	PLOT DATE: 3/4/2016
PROJECT LEADER: J.D. SALADINO	DRAWN BY: G.A. GOMEZ
DESIGNED BY: G.A. GOMEZ	CHECKED BY: M.J. SERVETAS
CROSS SECTIONS	SHEET 176 OF 230

VHB 57414.00

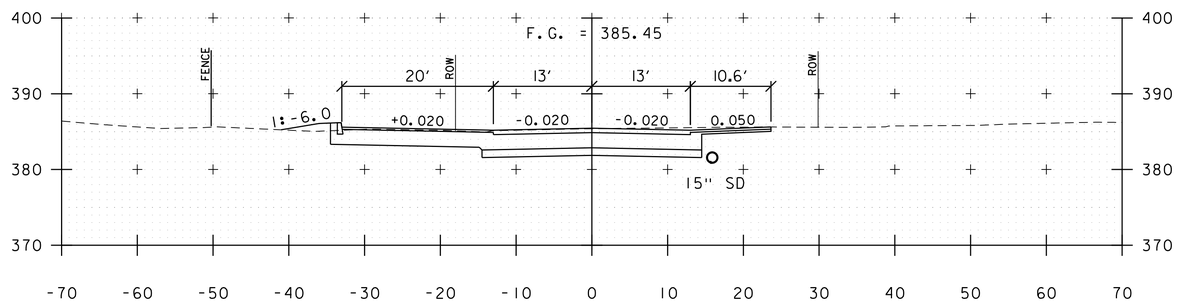

503+50

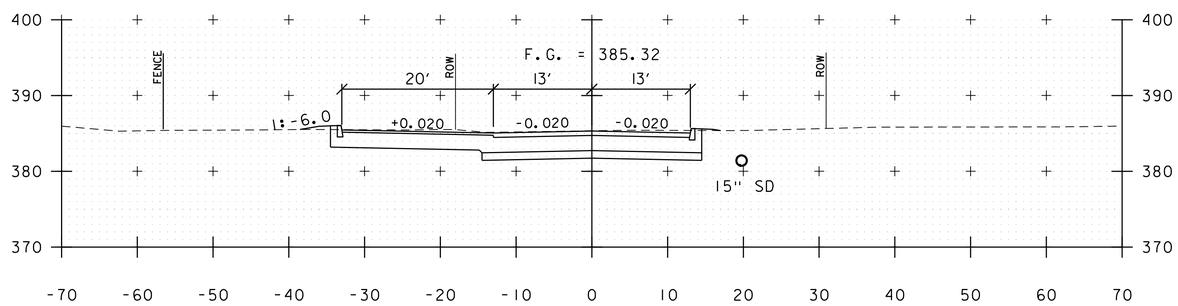

503+25

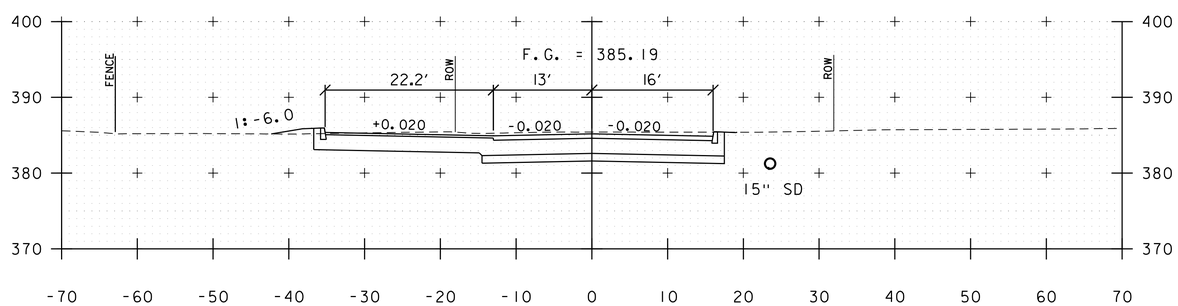

503+00

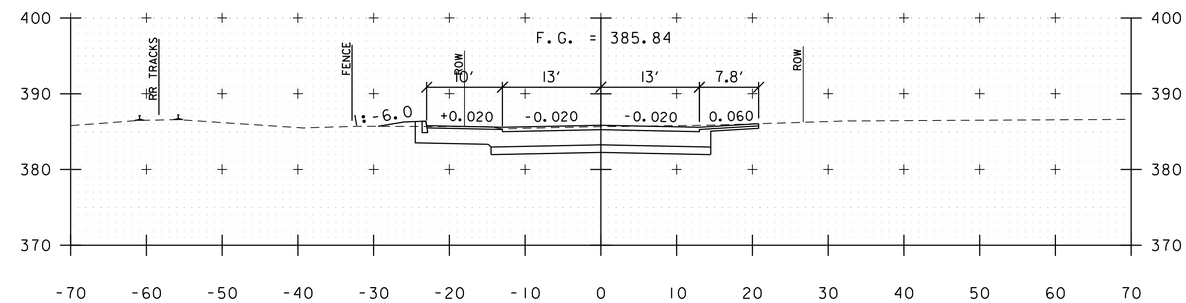

504+25

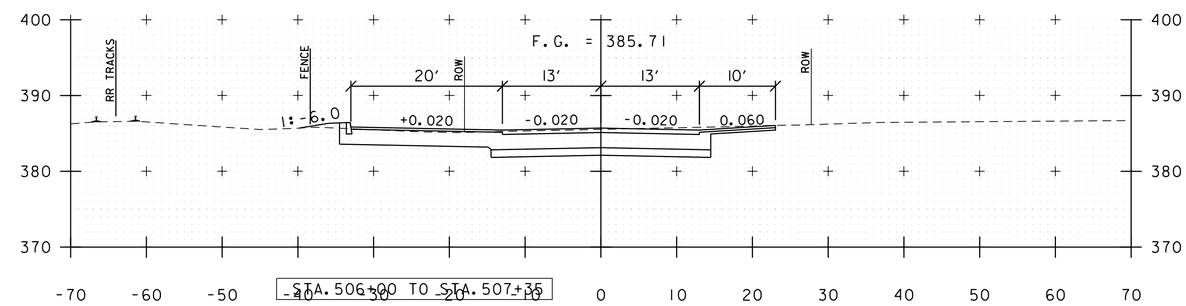

504+00

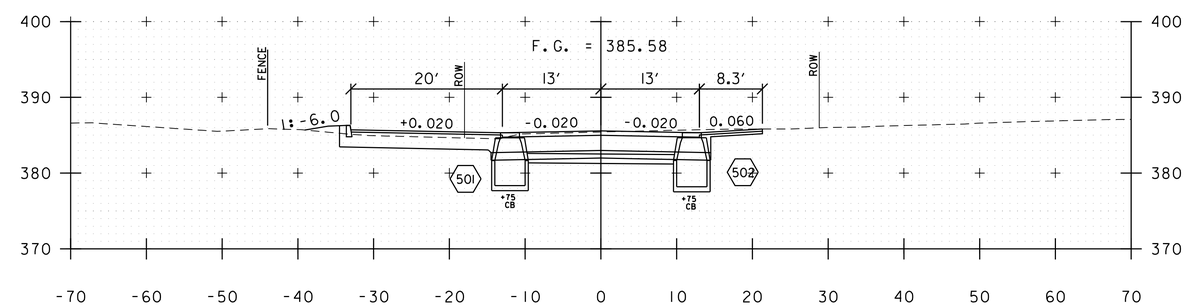

503+75

MARKET STREET

PROJECT NAME: ST. ALBANS	
PROJECT NUMBER: HPP 8000(17)	
FILE NAME: 57414_XS_Market.dgn	PLOT DATE: 3/4/2016
PROJECT LEADER: J.D. SALADINO	DRAWN BY: G.A. GOMEZ
DESIGNED BY: G.A. GOMEZ	CHECKED BY: M.J. SERVETAS
CROSS SECTIONS	SHEET 177 OF 230

VHB 57414.00

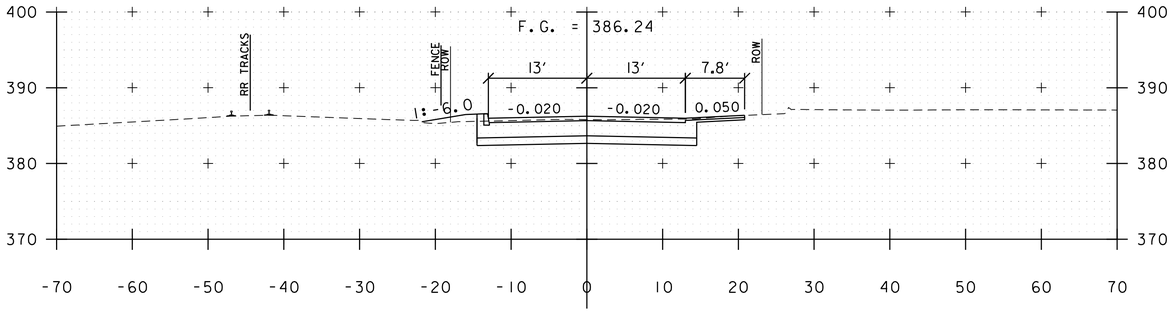

505+00

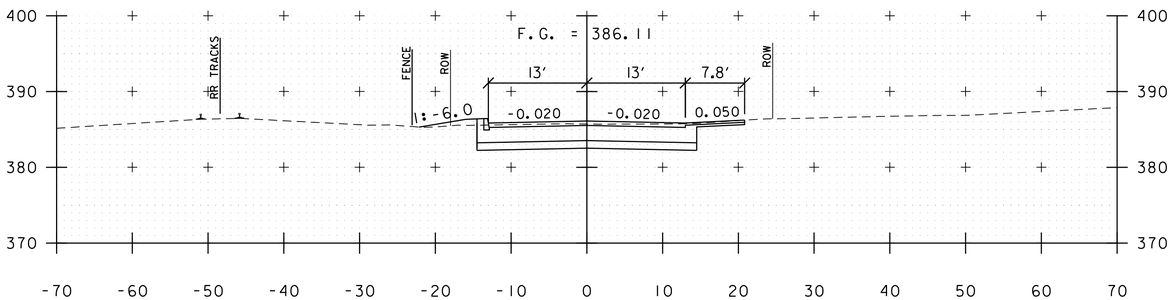

504+75

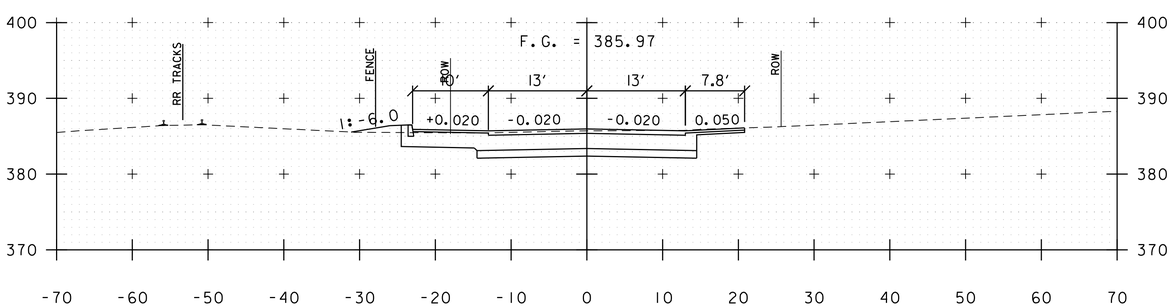

504+50

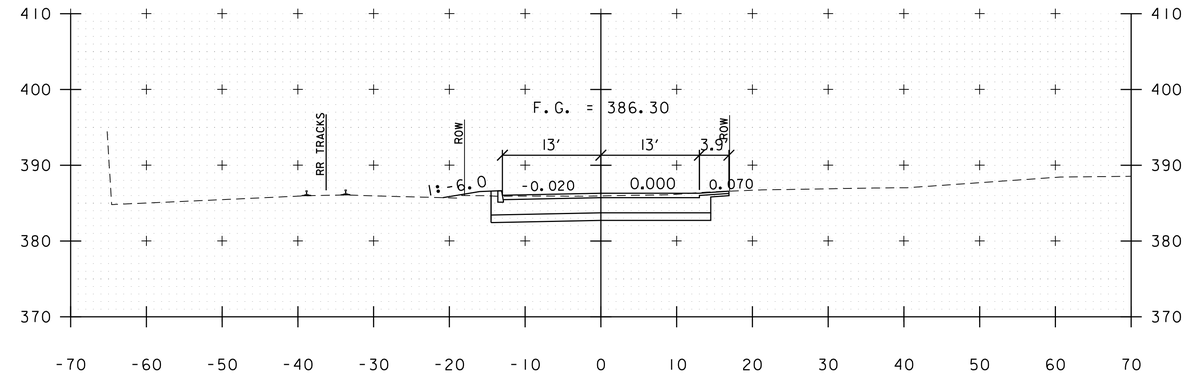

505+75

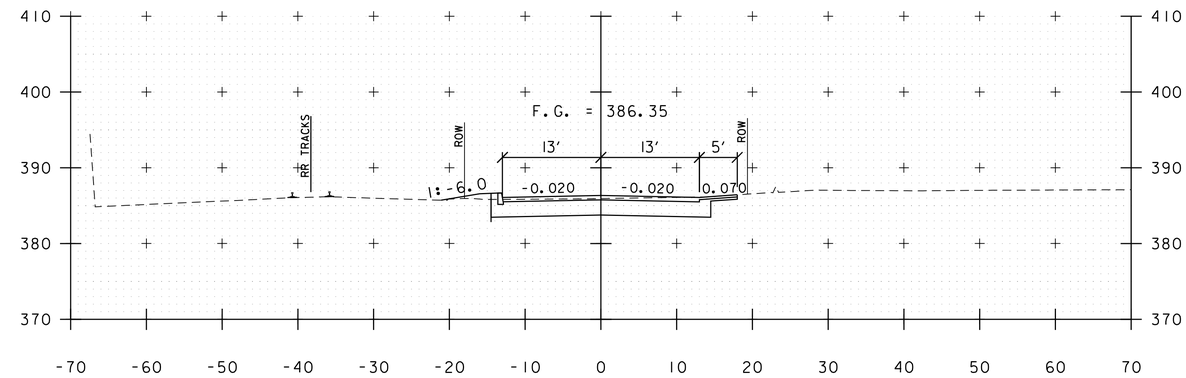

505+50

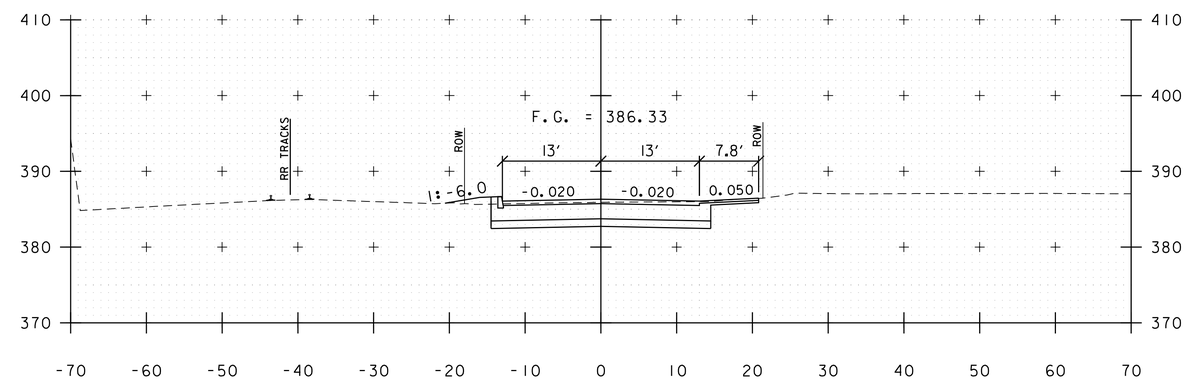

505+25

MARKET STREET

PROJECT NAME: ST. ALBANS	
PROJECT NUMBER: HPP 8000(17)	
FILE NAME: 57414_XS_Market.dgn	PLOT DATE: 3/4/2016
PROJECT LEADER: J.D. SALADINO	DRAWN BY: G.A. GOMEZ
DESIGNED BY: G.A. GOMEZ	CHECKED BY: M.J. SERVETAS
CROSS SECTIONS	SHEET 178 OF 230

VHB 57414.00

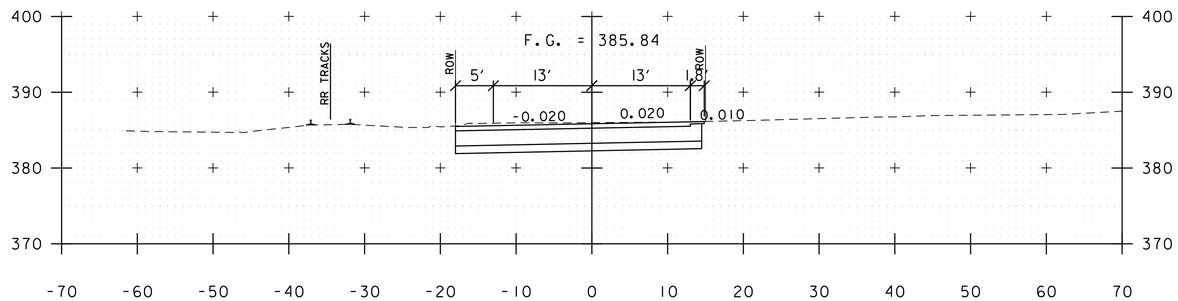

506+50

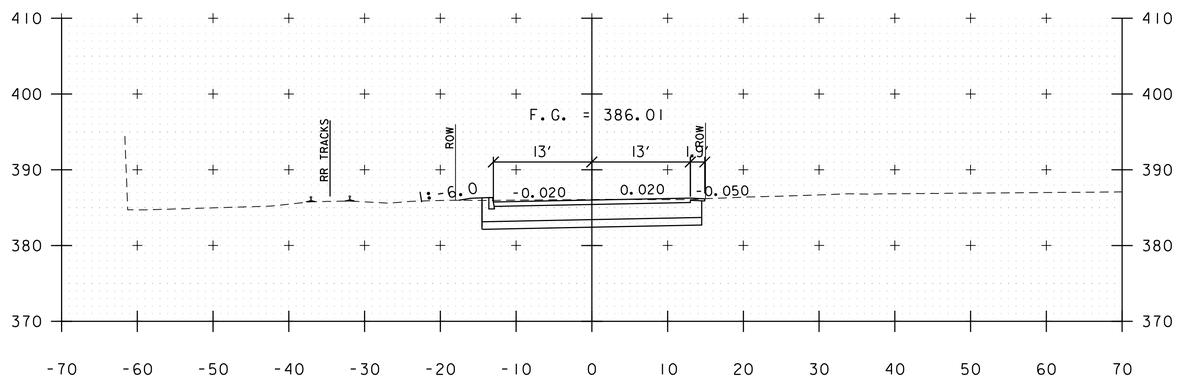

506+25

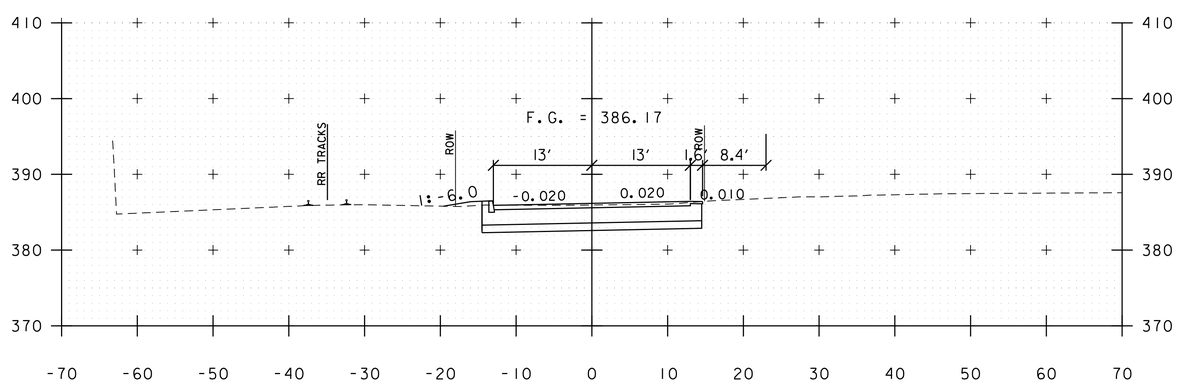

506+00

STATION 507+04
END CONSTRUCTION
MATCH TO LAKE STREET (VT 36)

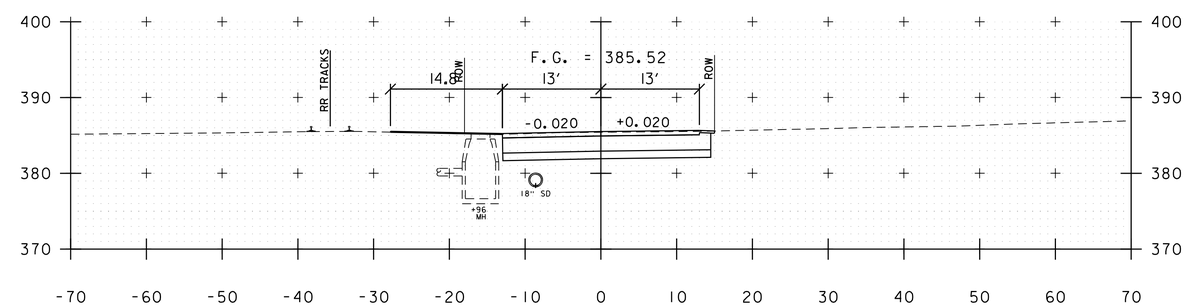

507+00

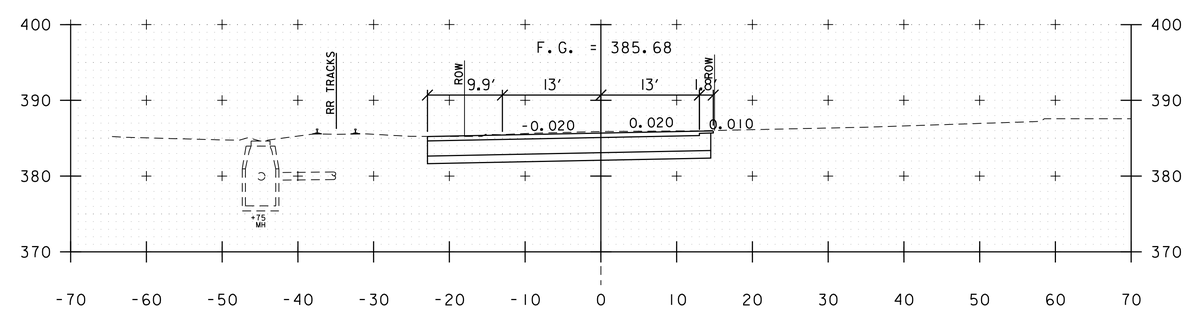

506+75

MARKET STREET

PROJECT NAME: ST. ALBANS	
PROJECT NUMBER: HPP 8000(17)	
FILE NAME: 57414_XS_Market.dgn	PLOT DATE: 3/4/2016
PROJECT LEADER: J.D. SALADINO	DRAWN BY: G.A. GOMEZ
DESIGNED BY: G.A. GOMEZ	CHECKED BY: M.J. SERVETAS
CROSS SECTIONS	SHEET 179 OF 230

VHB 57414.00

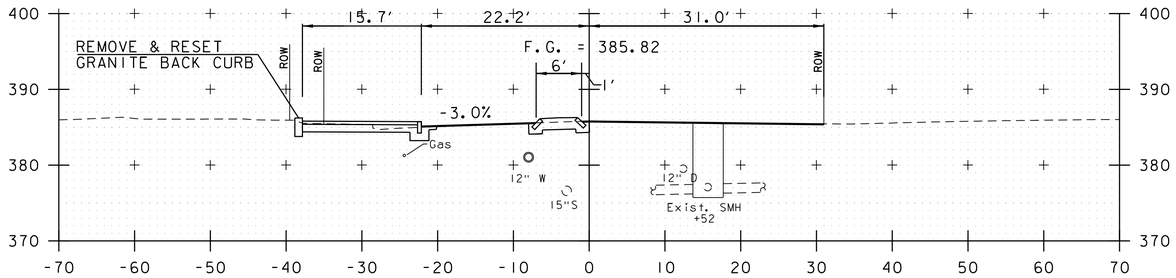

38+50

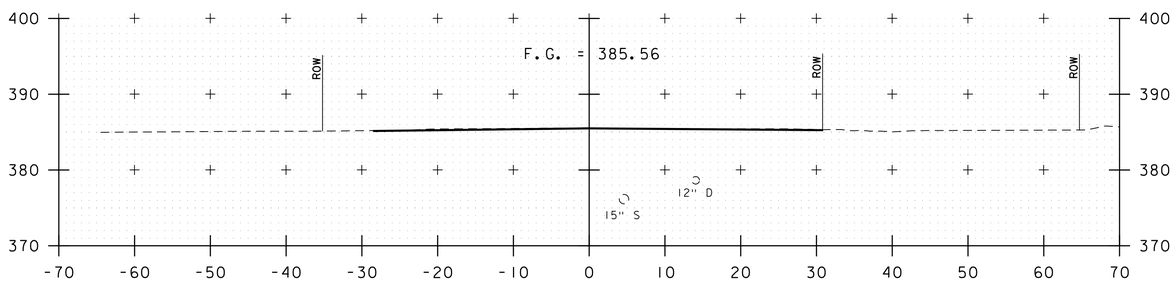

STATION 38+25
BEGIN PROJECT

38+25

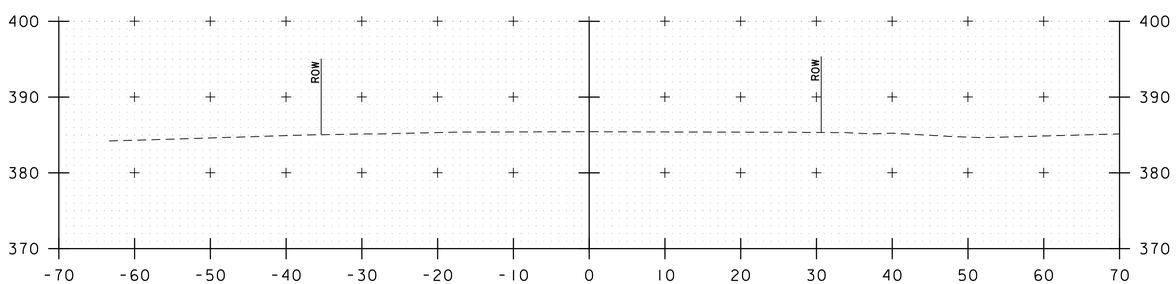

38+00

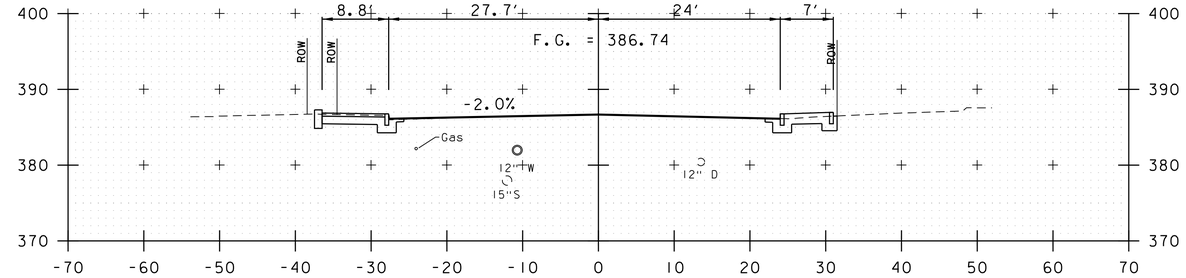

39+25

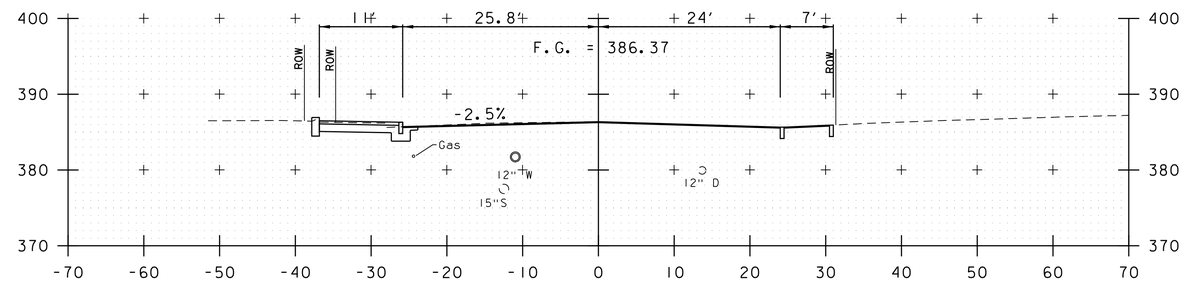

39+00

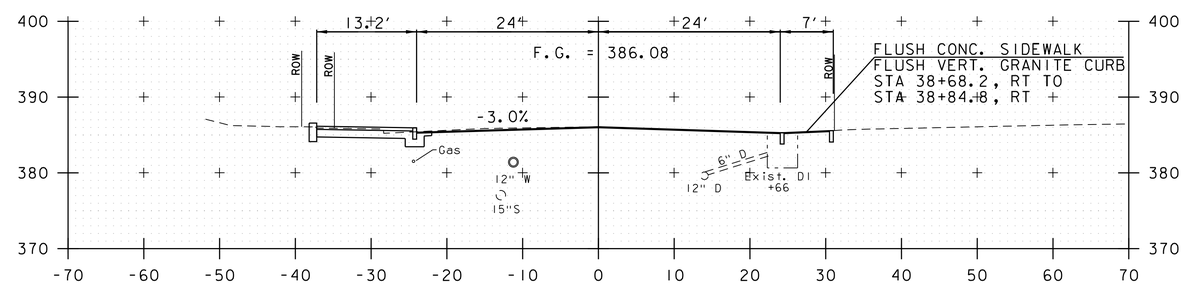

38+75

LAKE STREET (VT 36)

PROJECT NAME: ST. ALBANS	
PROJECT NUMBER: HPP 8000(17)	
FILE NAME: 57414_XS_Lake_Interim.dgn	PLOT DATE: 3/4/2016
PROJECT LEADER: M.A. COLGAN	DRAWN BY: D.M. PECK
DESIGNED BY: D.M. PECK	CHECKED BY: M.J. SERVETAS
CROSS SECTIONS	SHEET 180 OF 230

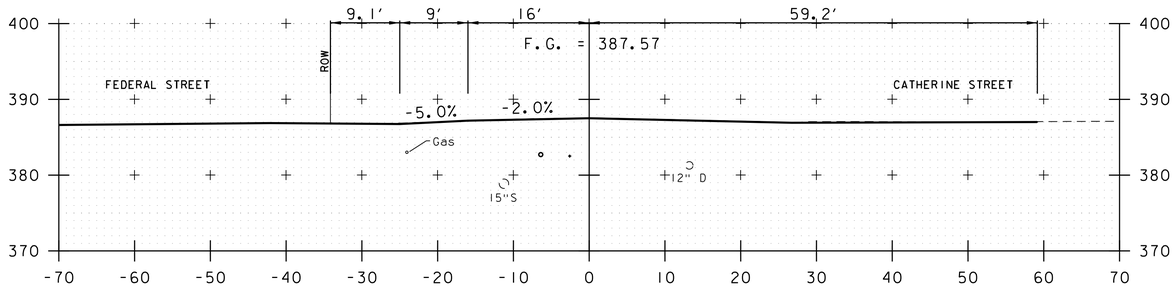

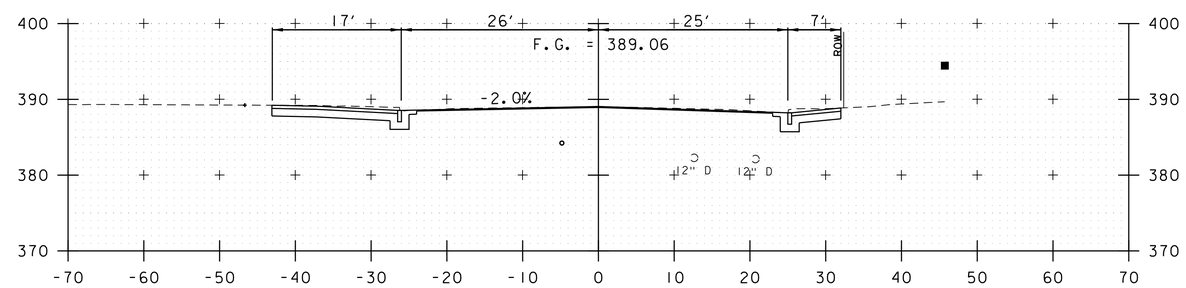

39+75

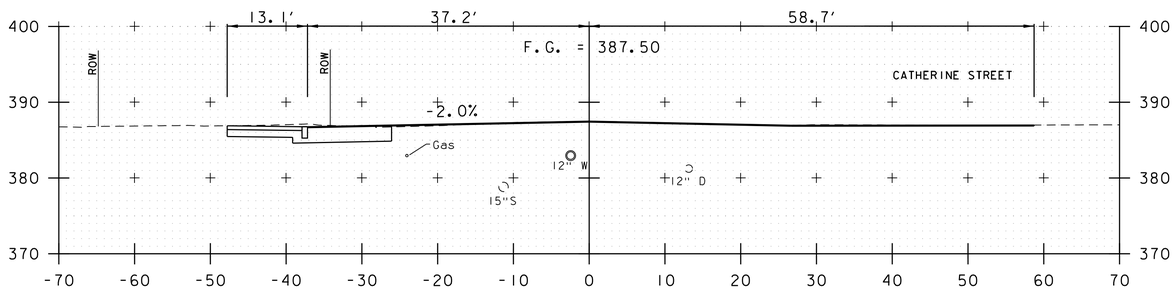

40+50

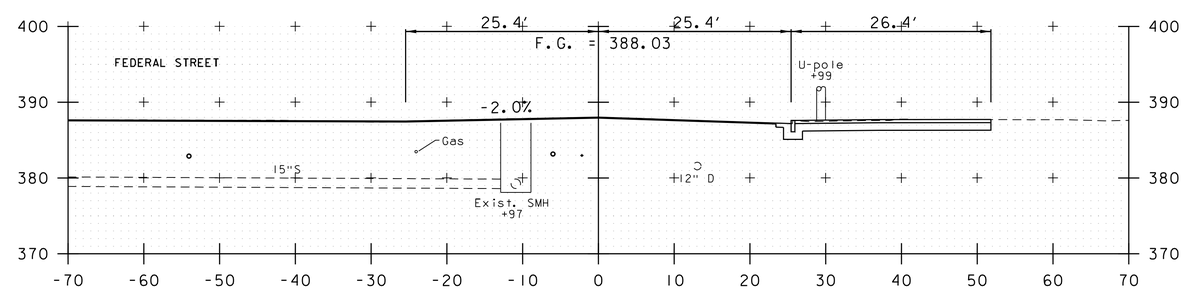

39+62

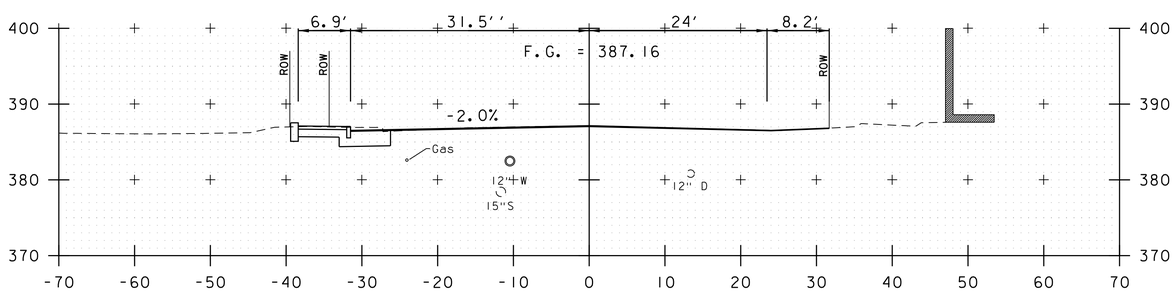

40+00

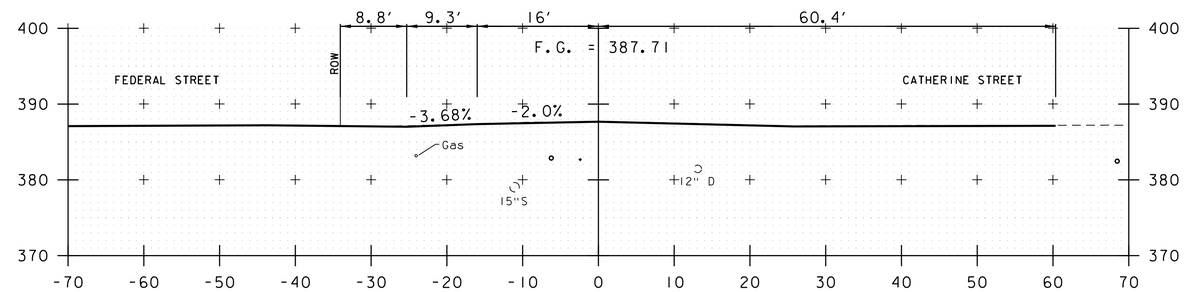

39+50

39+86

LAKE STREET (VT 36)

PROJECT NAME: ST. ALBANS	
PROJECT NUMBER: HPP 8000(17)	
FILE NAME: 57414_XS_Lake_Interim.dgn	PLOT DATE: 3/4/2016
PROJECT LEADER: M.A. COLGAN	DRAWN BY: D.M. PECK
DESIGNED BY: D.M. PECK	CHECKED BY: M.J. SERVETAS
CROSS SECTIONS	SHEET 181 OF 230

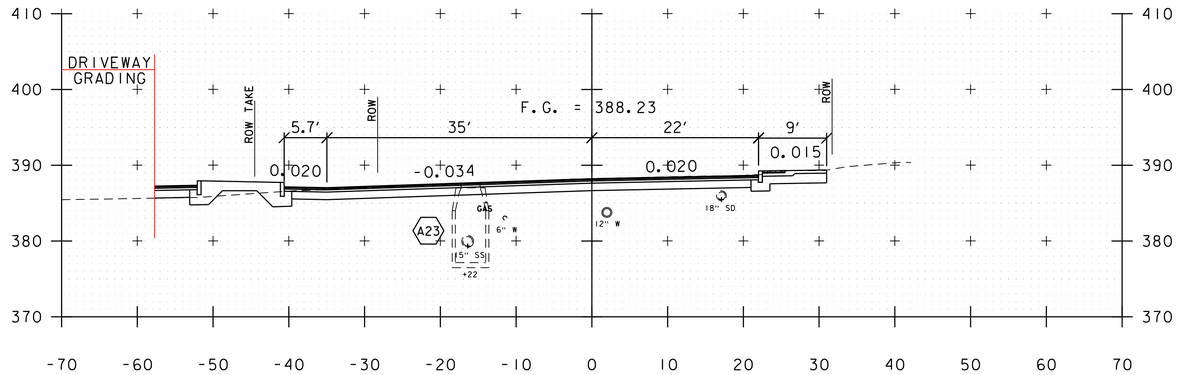

602+00

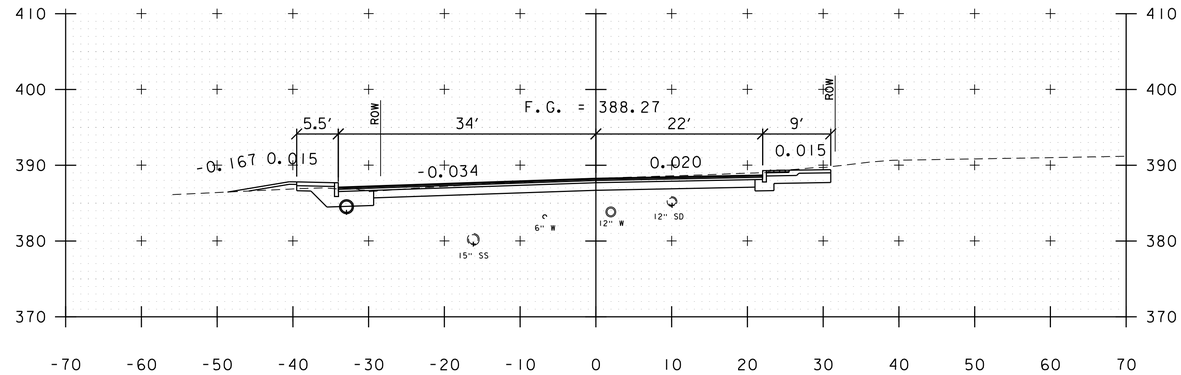

602+75

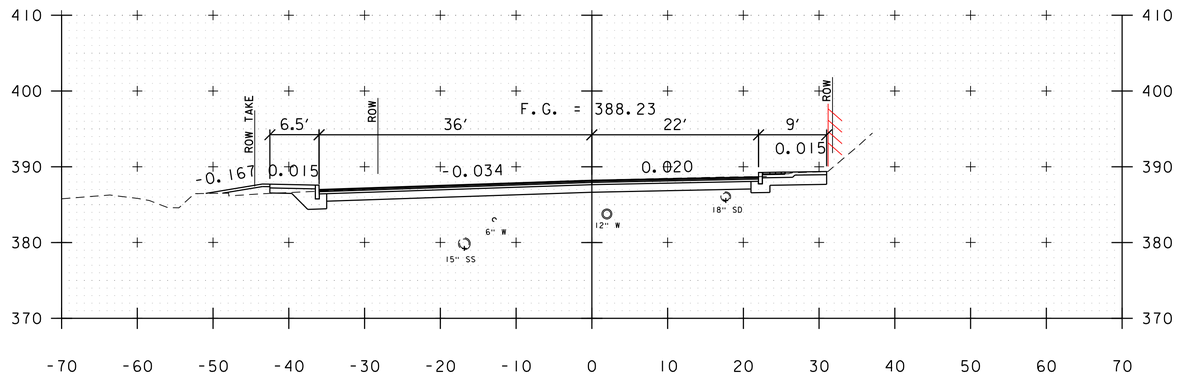

601+75

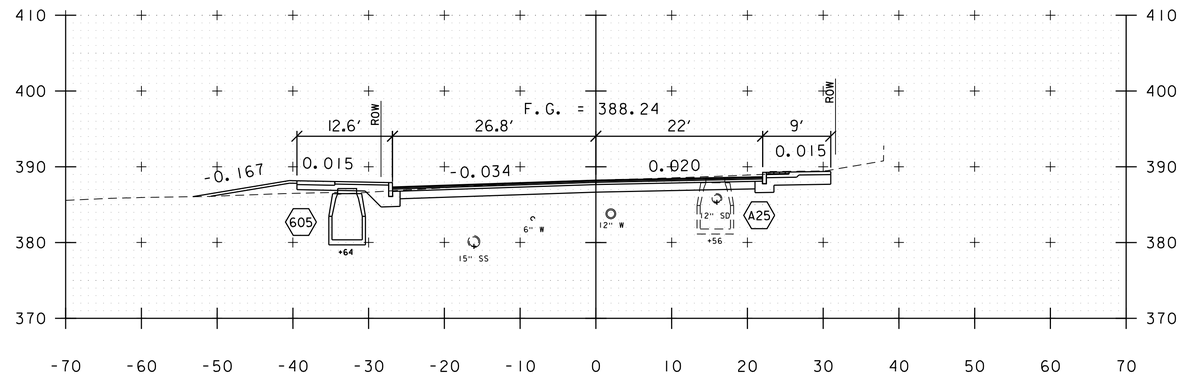

602+50

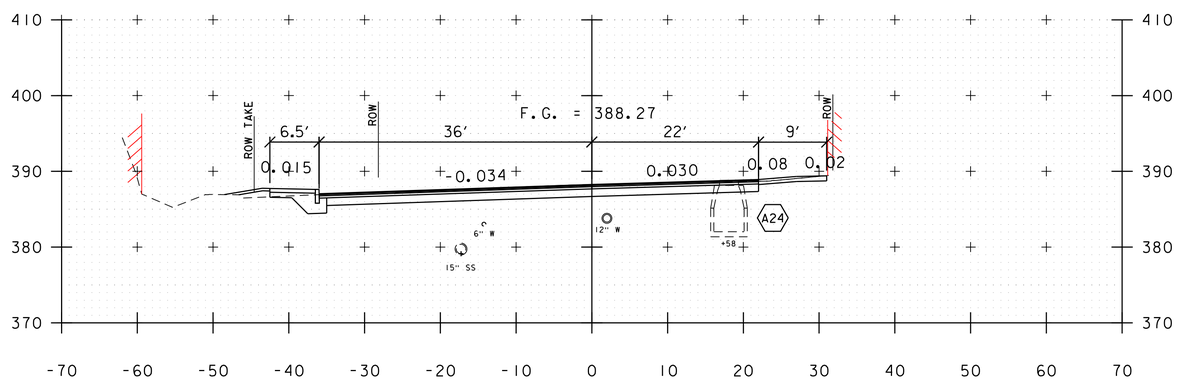

601+50

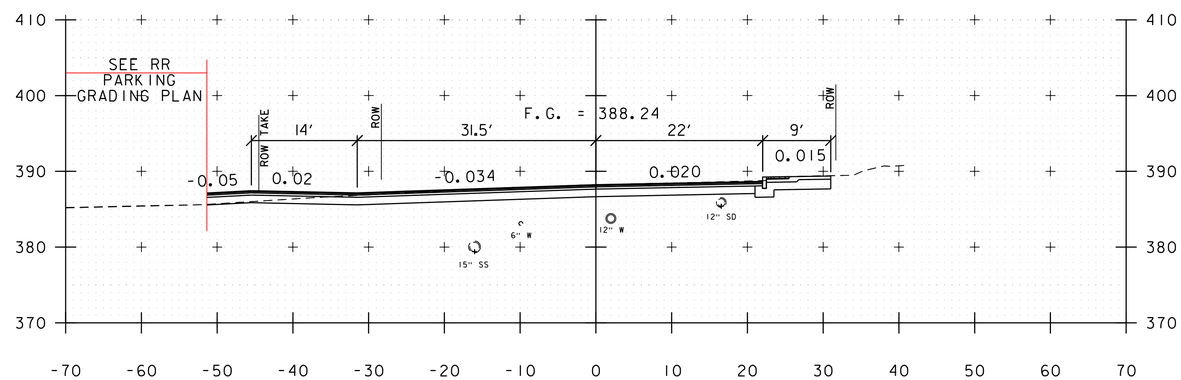

602+25

FEDERAL STREET

PROJECT NAME: ST. ALBANS	
PROJECT NUMBER: HPP 8000(17)	
FILE NAME: 57414_XS_FederalStreet.dgn	PLOT DATE: 3/4/2016
PROJECT LEADER: J.D. SALADINO	DRAWN BY: G.A. GOMEZ
DESIGNED BY: G.A. GOMEZ	CHECKED BY: M.J. SERVETAS
CROSS SECTIONS	SHEET 182 OF 230

VHB 57414.00

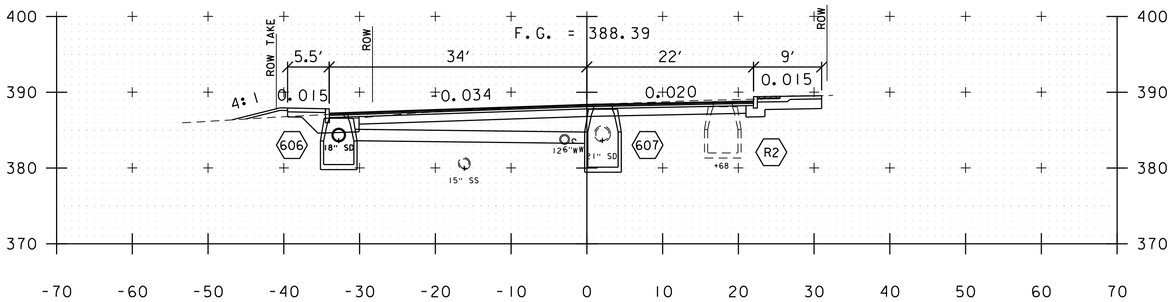

603+50

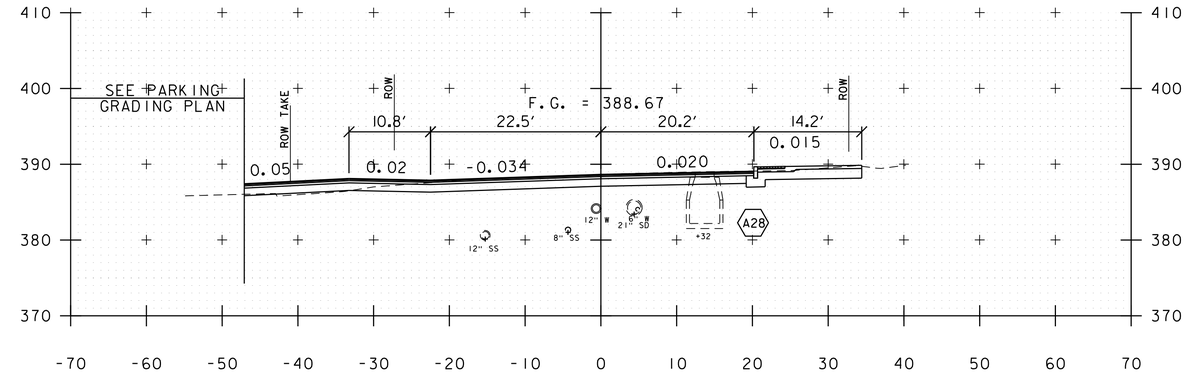

604+25

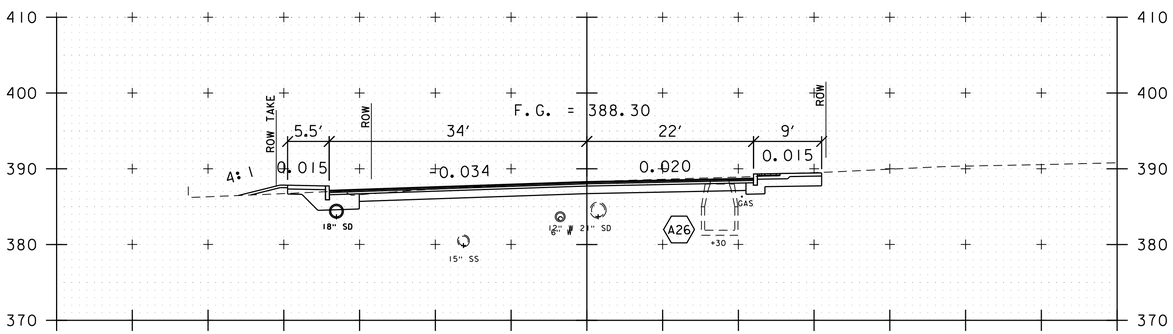

603+25

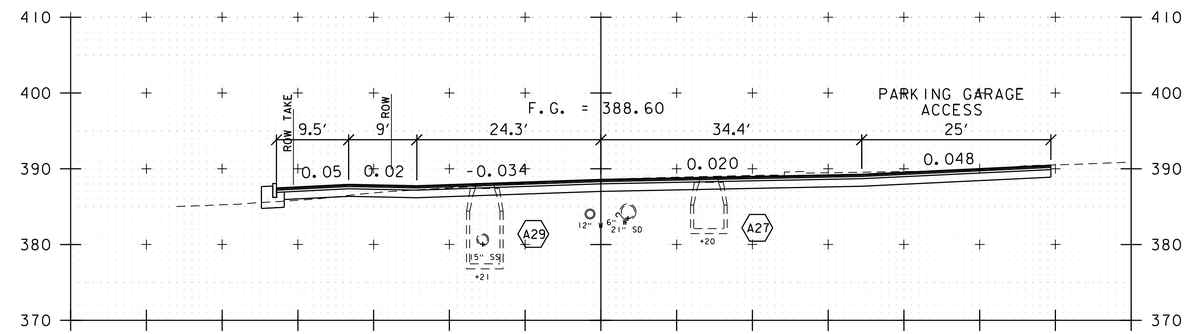

604+00

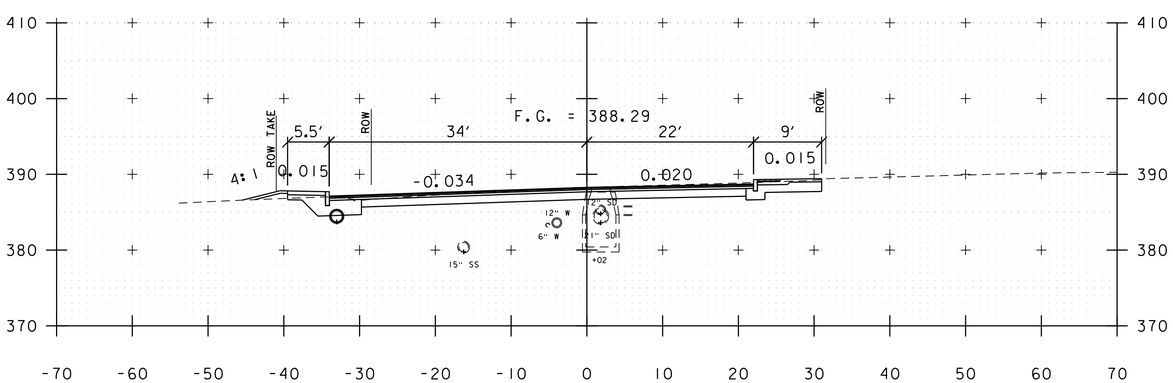

603+00

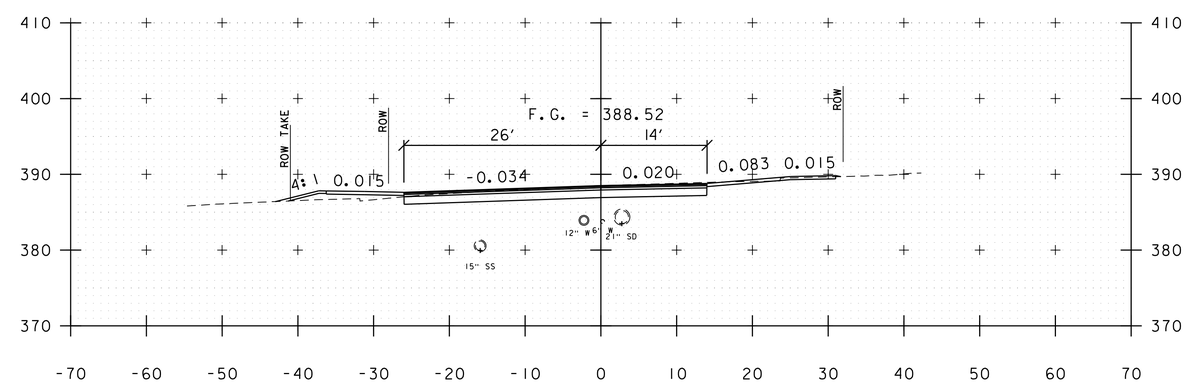

603+75

FEDERAL STREET

PROJECT NAME: ST. ALBANS	
PROJECT NUMBER: HPP 8000(17)	
FILE NAME: 57414_XS_FederalStreet.dgn	PLOT DATE: 3/4/2016
PROJECT LEADER: J.D. SALADINO	DRAWN BY: G.A. GOMEZ
DESIGNED BY: G.A. GOMEZ	CHECKED BY: M.J. SERVETAS
CROSS SECTIONS	SHEET 183 OF 230

VHB 57414.00

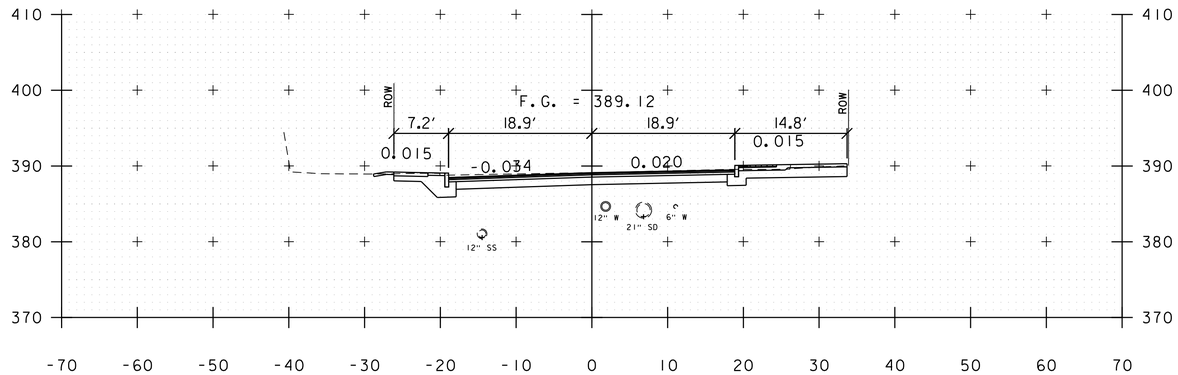

605+00

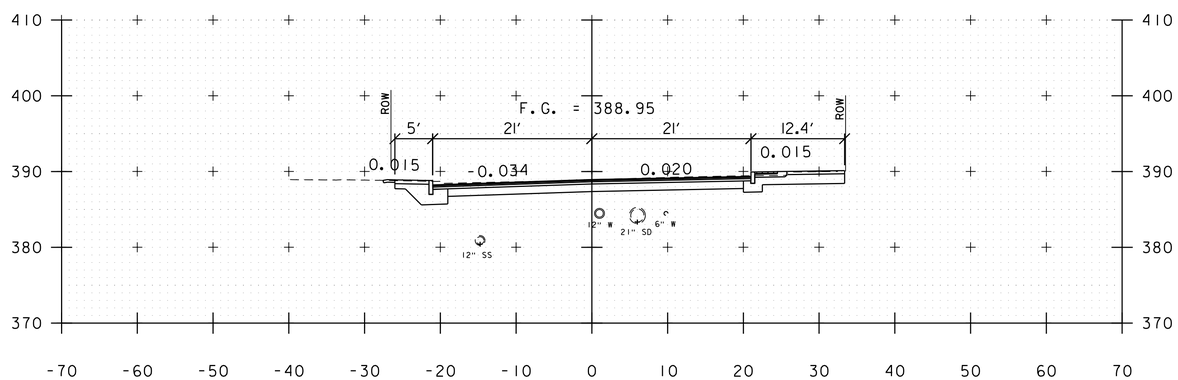

604+75

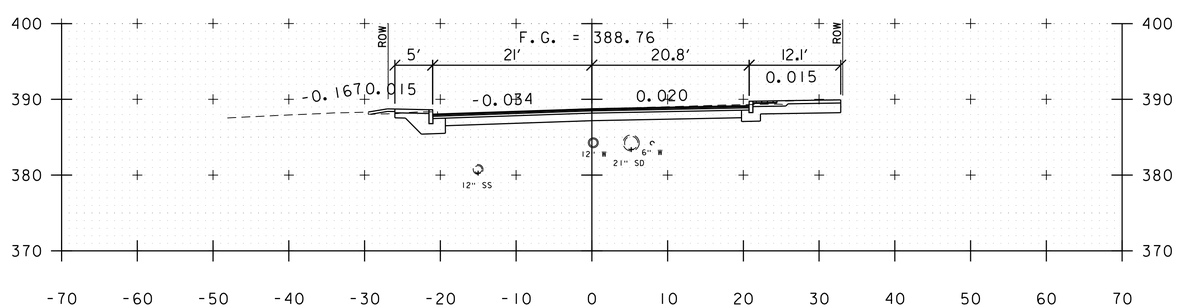

604+50

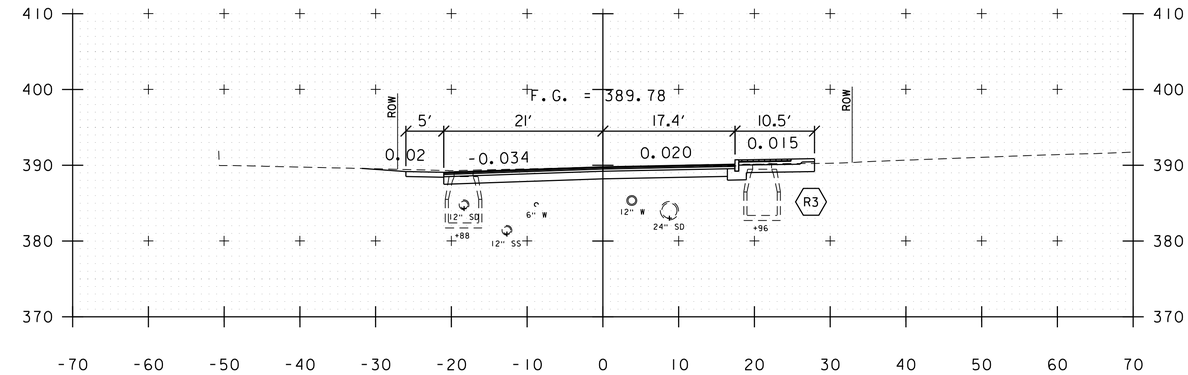

605+75

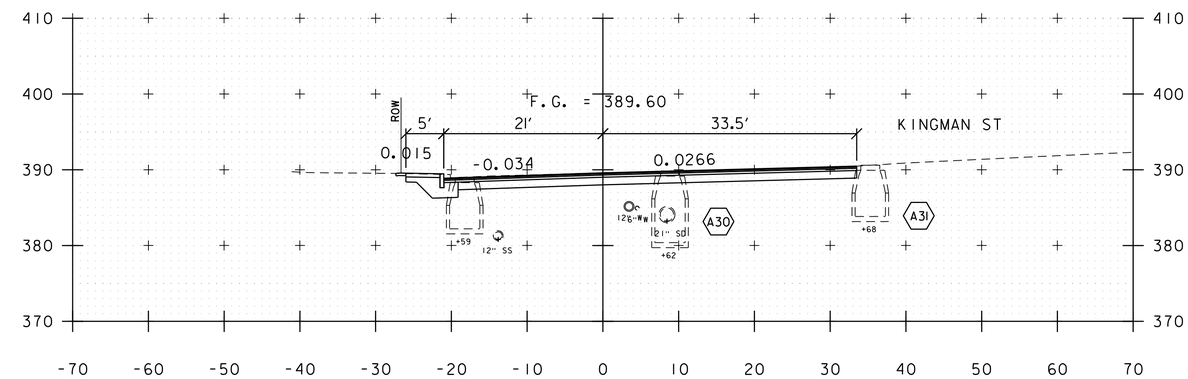

605+50

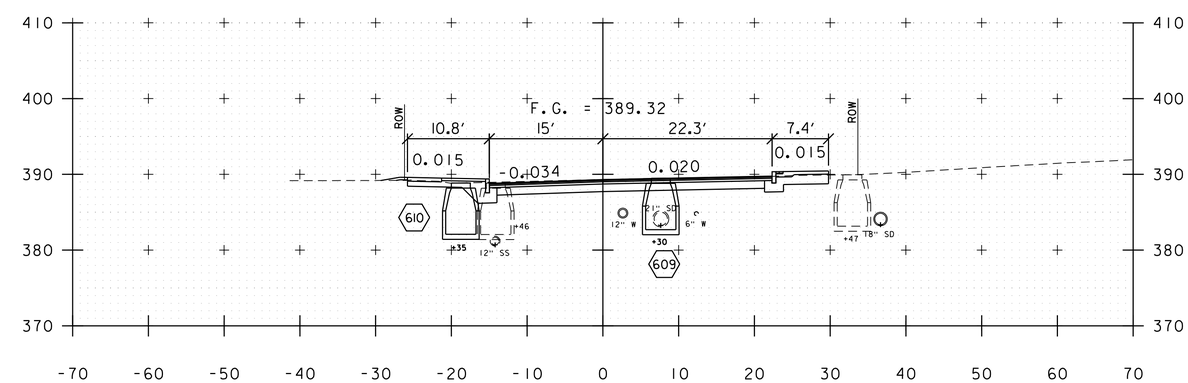

605+25

FEDERAL STREET

PROJECT NAME: ST. ALBANS	
PROJECT NUMBER: HPP 8000(17)	
FILE NAME: 57414_XS_FederalStreet.dgn	PLOT DATE: 3/4/2016
PROJECT LEADER: J.D. SALADINO	DRAWN BY: G.A. GOMEZ
DESIGNED BY: G.A. GOMEZ	CHECKED BY: M.J. SERVETAS
CROSS SECTIONS	SHEET 184 OF 230

VHB 57414.00

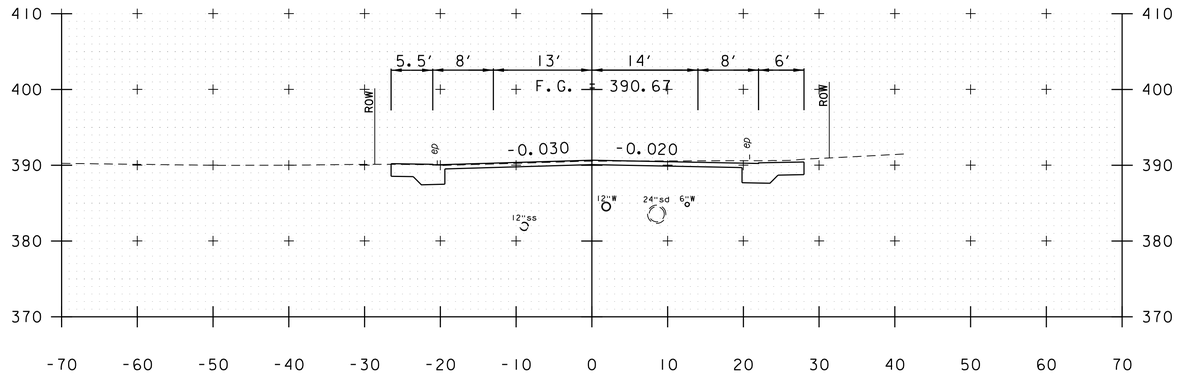

606+68

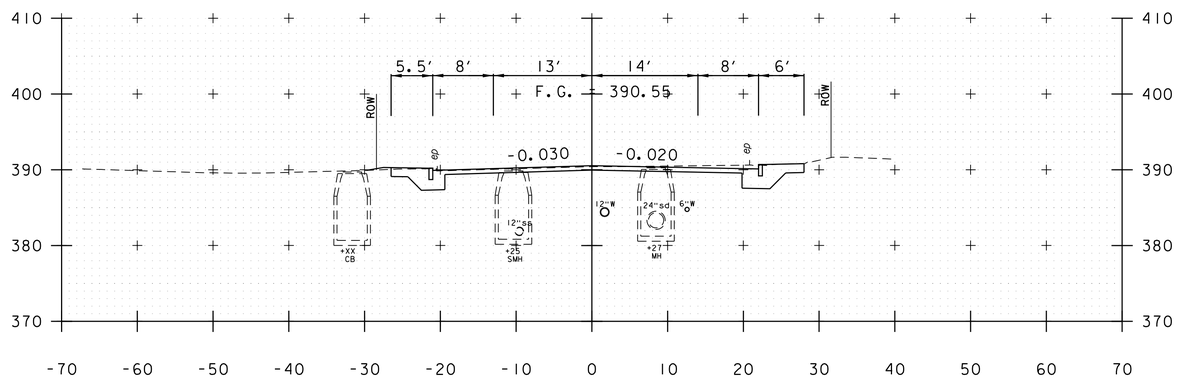

606+50

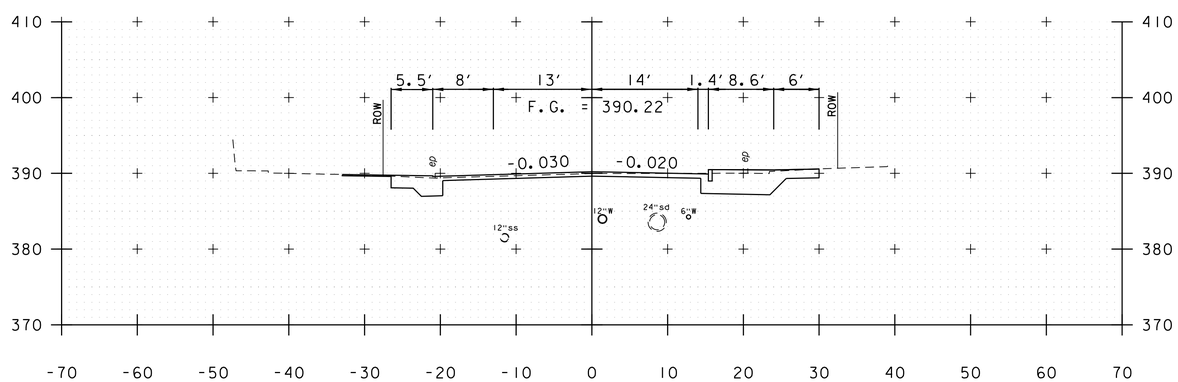

606+00

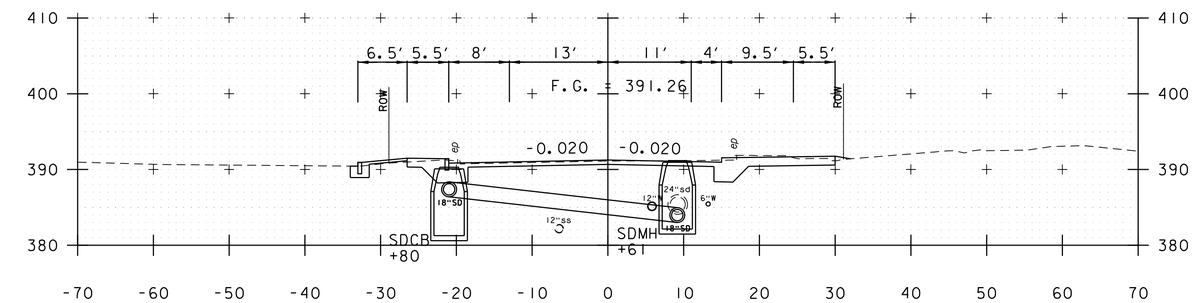

607+50

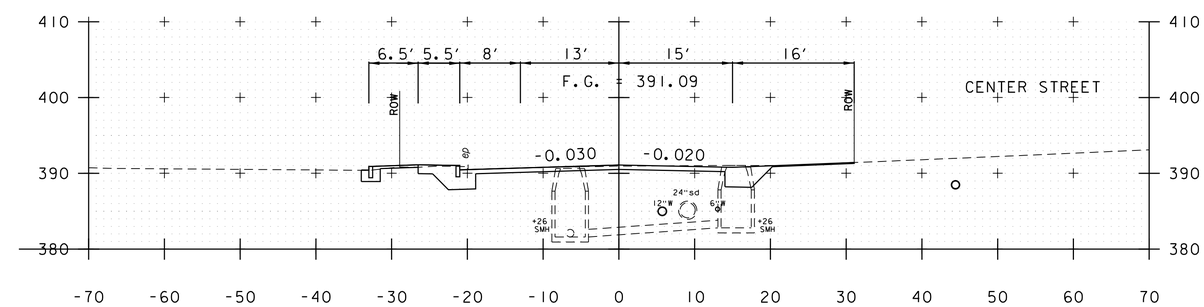

607+27

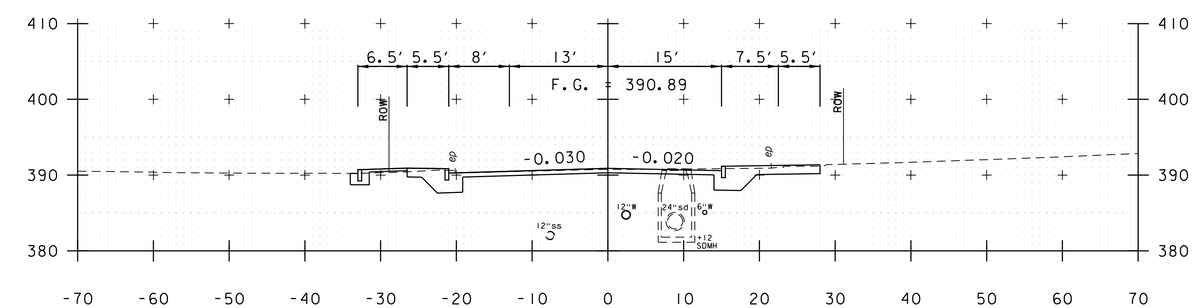

607+00

FEDERAL STREET

PROJECT NAME: ST. ALBANS	
PROJECT NUMBER: HPP 8000(17)	
FILE NAME: 57414_XS_FederalStreet.dgn	PLOT DATE: 3/4/2016
PROJECT LEADER: J.D. SALADINO	DRAWN BY: M.C. SCOTT
DESIGNED BY: M.C. SCOTT	CHECKED BY: M.J. SERVETAS
CROSS SECTIONS	SHEET 185 OF 230

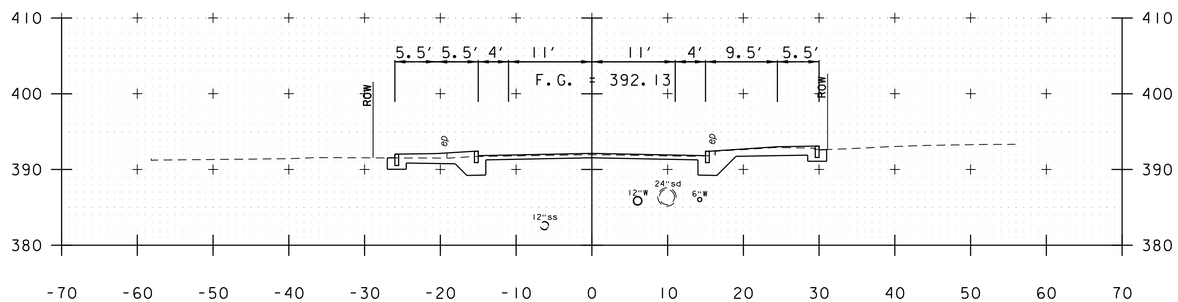

608+50

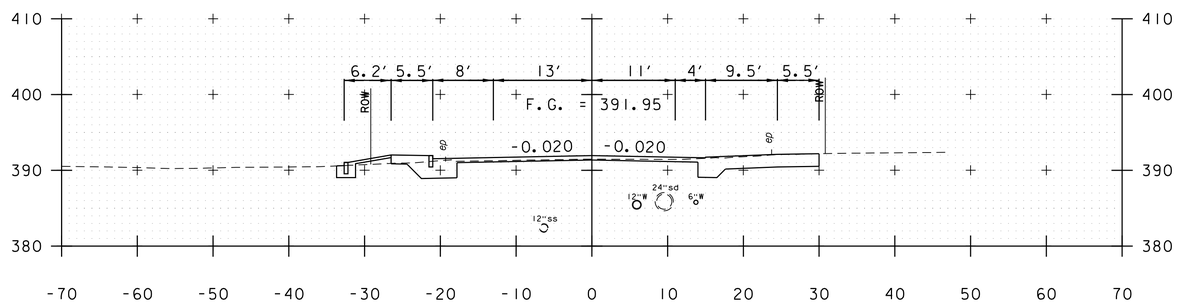

608+00

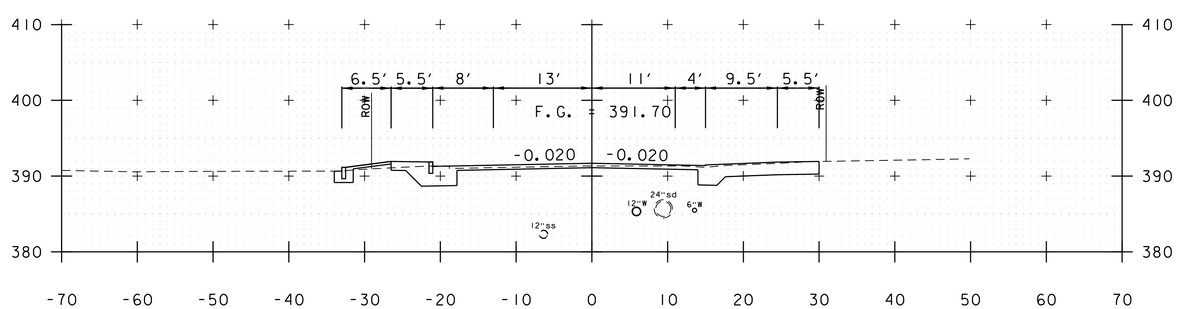

607+82

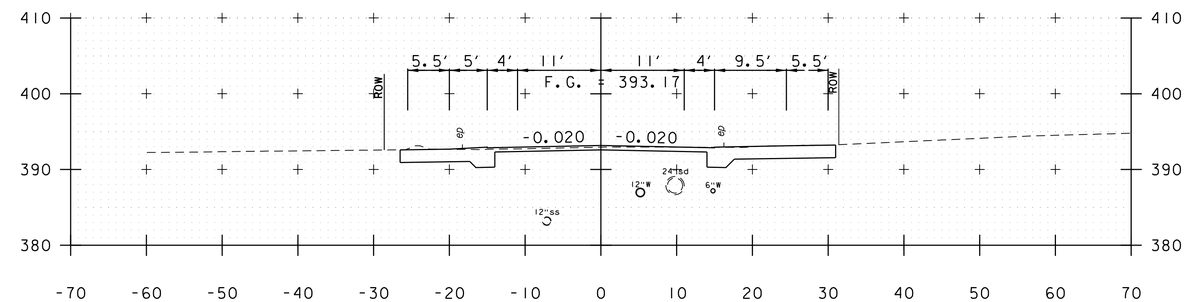

610+00

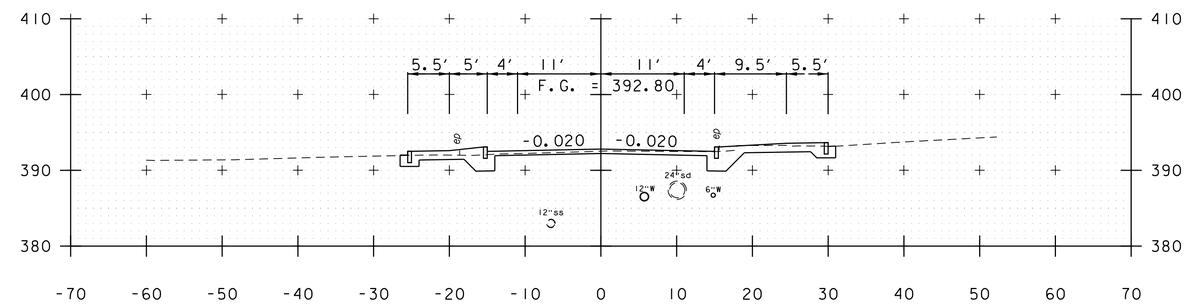

609+50

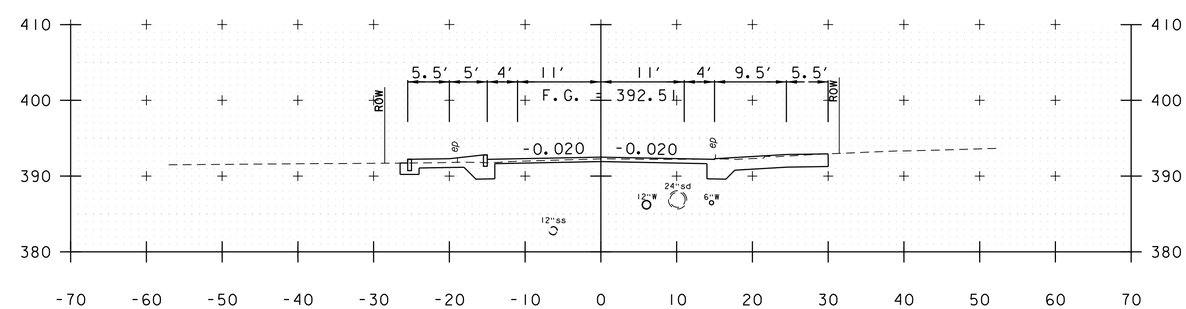

609+00

FEDERAL STREET

PROJECT NAME: ST. ALBANS	
PROJECT NUMBER: HPP 8000(17)	
FILE NAME: 57414_XS_FederalStreet.dgn	PLOT DATE: 3/4/2016
PROJECT LEADER: J.D. SALADINO	DRAWN BY: M.C. SCOTT
DESIGNED BY: M.C. SCOTT	CHECKED BY: M.J. SERVETAS
CROSS SECTIONS	SHEET 186 OF 230

VHB 57414.00

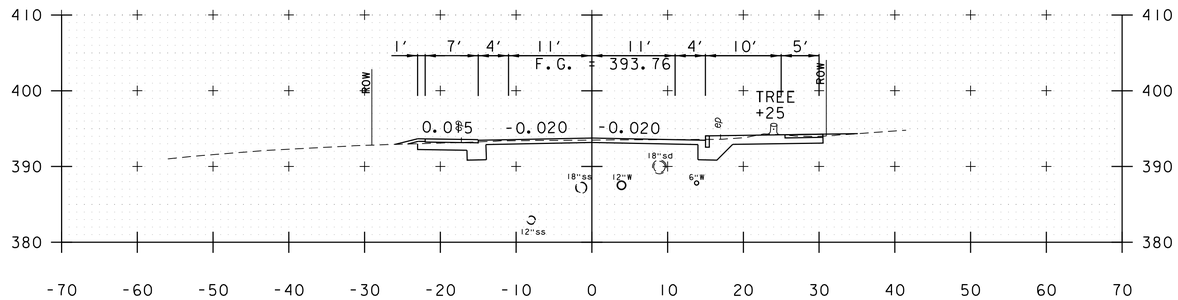

611+00

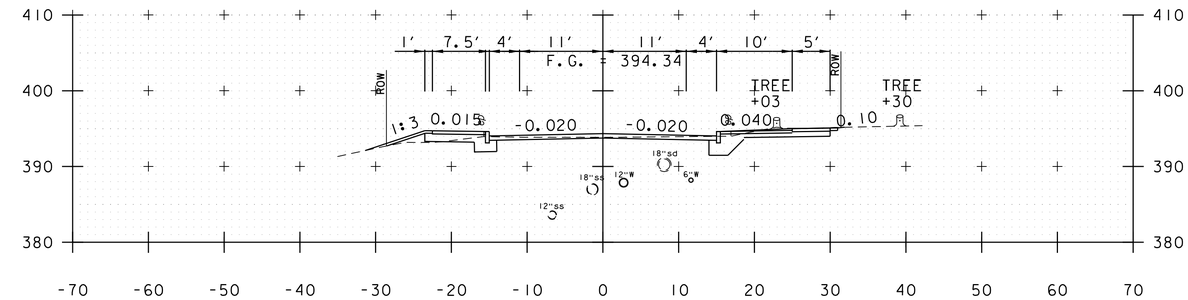

612+00

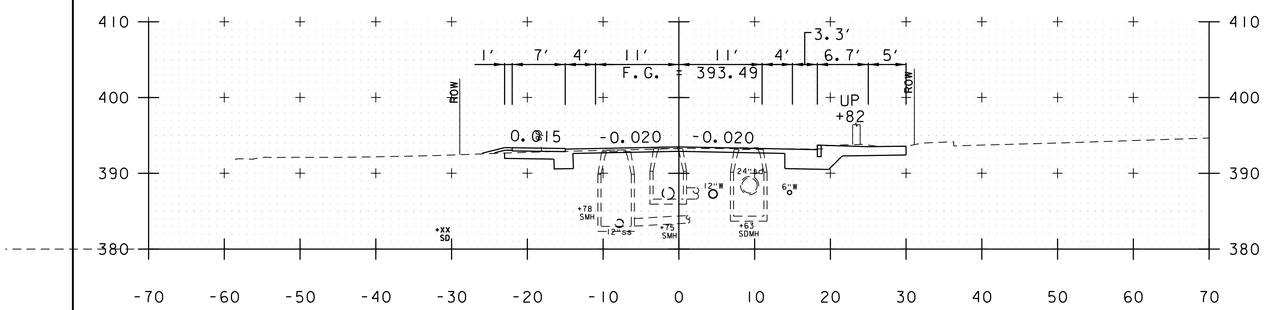

610+50

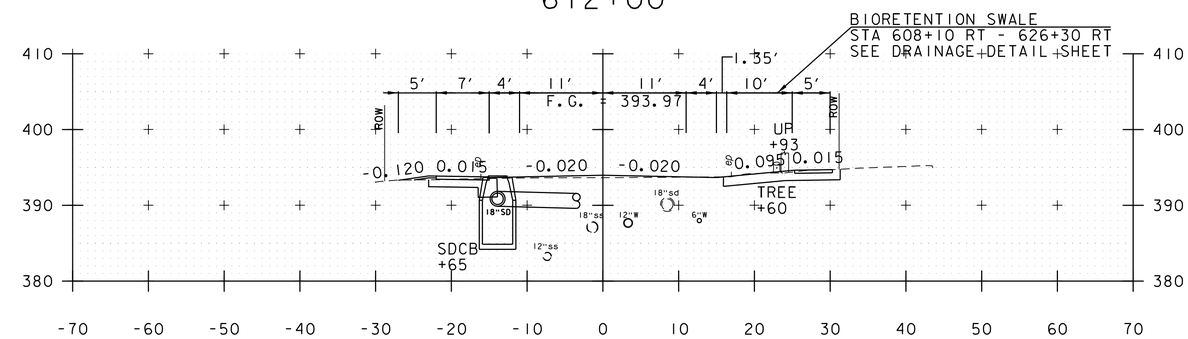

611+50

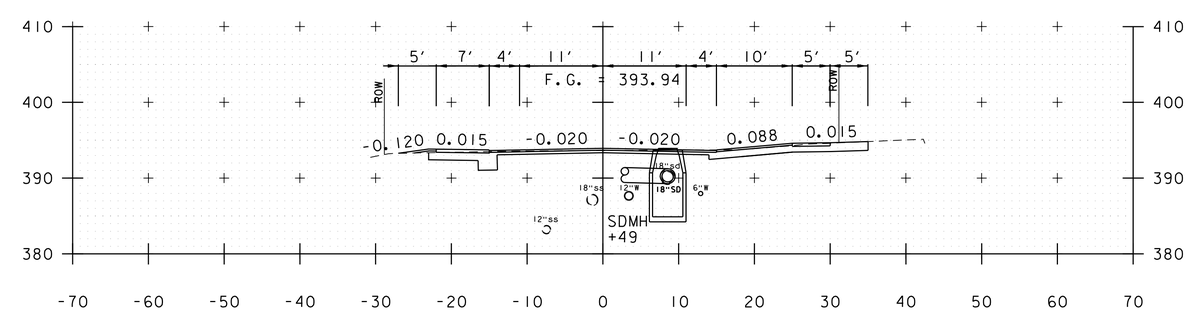

611+42

FEDERAL STREET

PROJECT NAME: ST. ALBANS	
PROJECT NUMBER: HPP 8000(17)	
FILE NAME: 57414_XS_FederalStreet.dgn	PLOT DATE: 3/4/2016
PROJECT LEADER: J.D. SALADINO	DRAWN BY: M.C. SCOTT
DESIGNED BY: M.C. SCOTT	CHECKED BY: M.J. SERVETAS
CROSS SECTIONS	SHEET 187 OF 230

VHB 57414.00

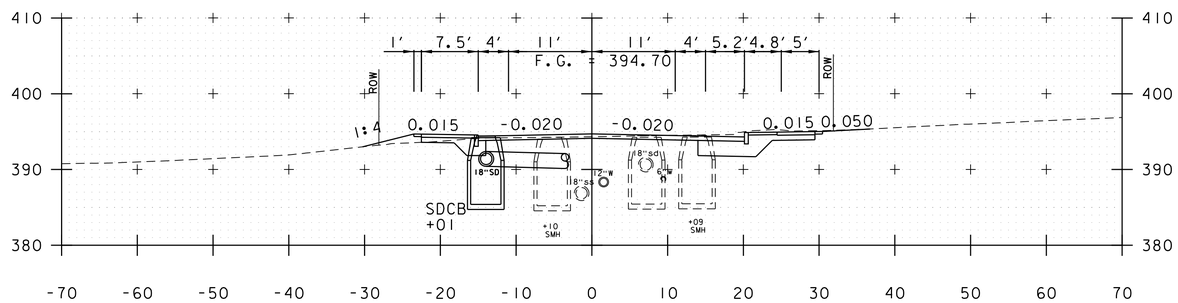

613+00

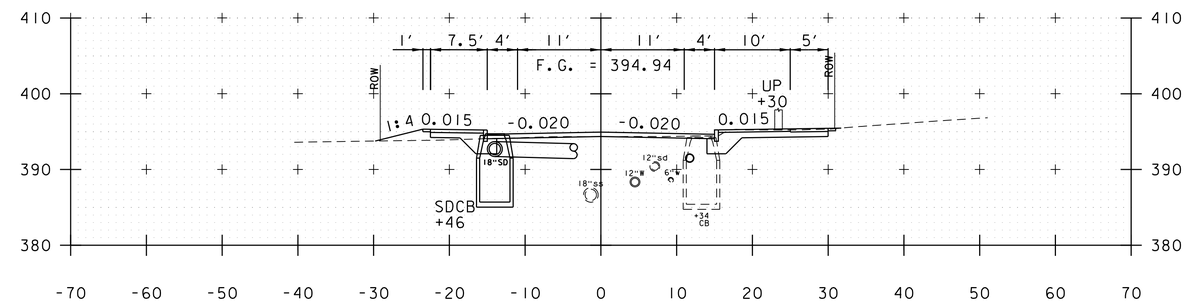

614+00

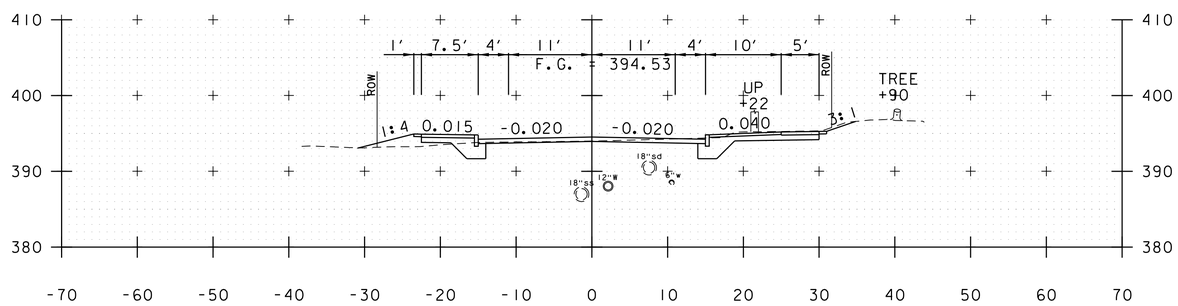

612+50

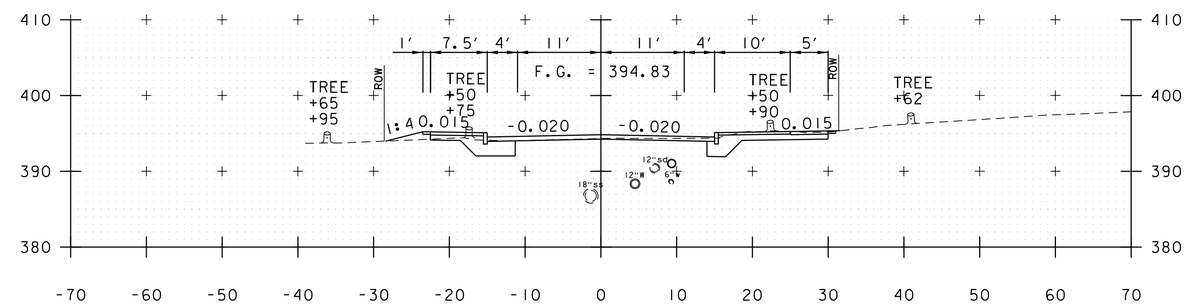

613+50

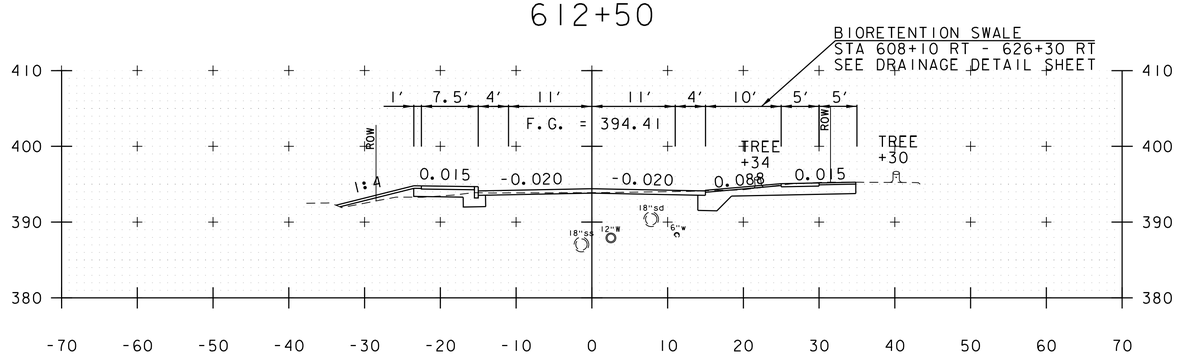

612+19

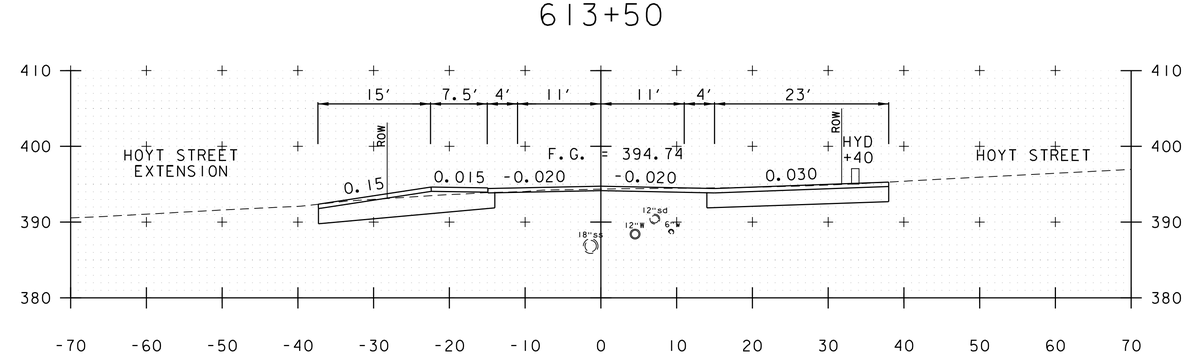

613+14

FEDERAL STREET

PROJECT NAME: ST. ALBANS	
PROJECT NUMBER: HPP 8000(17)	
FILE NAME: 57414_XS_FederalStreet.dgn	PLOT DATE: 3/4/2016
PROJECT LEADER: J.D. SALADINO	DRAWN BY: M.C. SCOTT
DESIGNED BY: M.C. SCOTT	CHECKED BY: M.J. SERVETAS
CROSS SECTIONS	SHEET 188 OF 230

VHB 57414.00

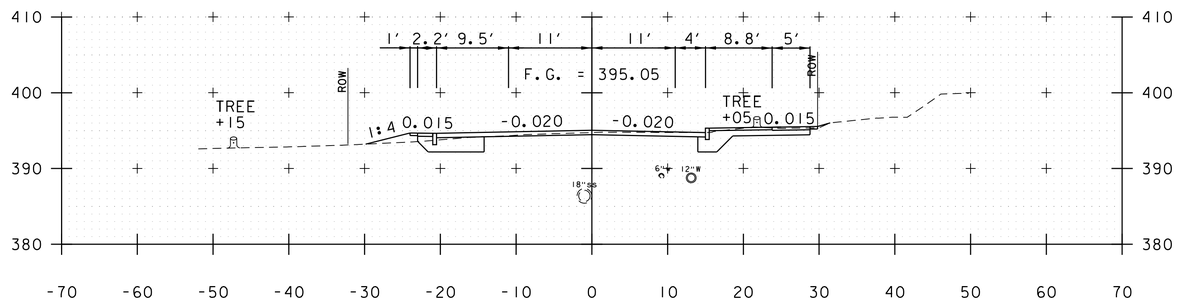

615+00

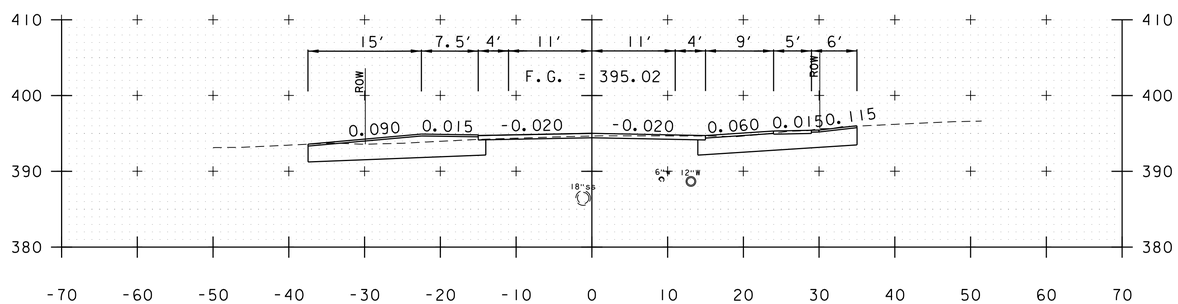

614+73

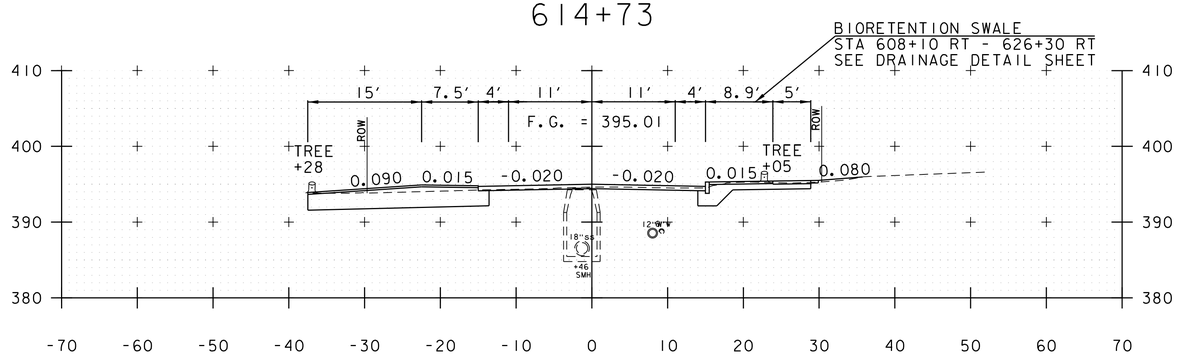

614+50

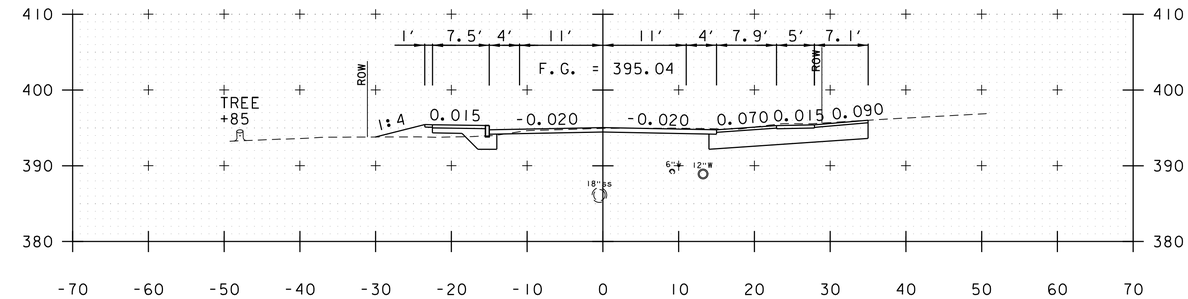

615+84

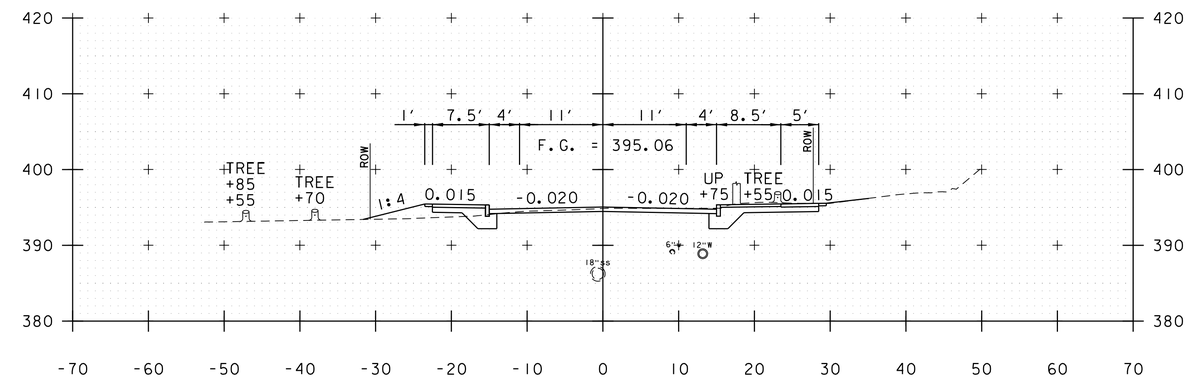

615+50

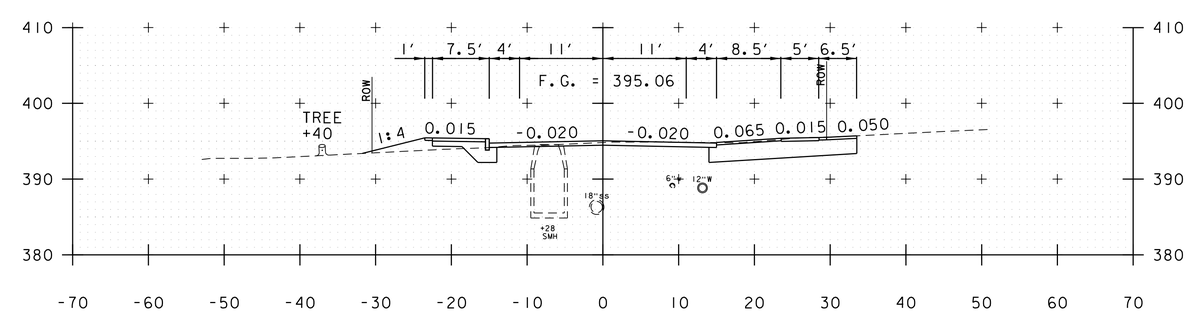

615+26

FEDERAL STREET

PROJECT NAME: ST. ALBANS	
PROJECT NUMBER: HPP 8000(17)	
FILE NAME: 57414_XS_FederalStreet.dgn	PLOT DATE: 3/4/2016
PROJECT LEADER: J.D. SALADINO	DRAWN BY: M.C. SCOTT
DESIGNED BY: M.C. SCOTT	CHECKED BY: M.J. SERVETAS
CROSS SECTIONS	SHEET 189 OF 230

VHB 57414.00

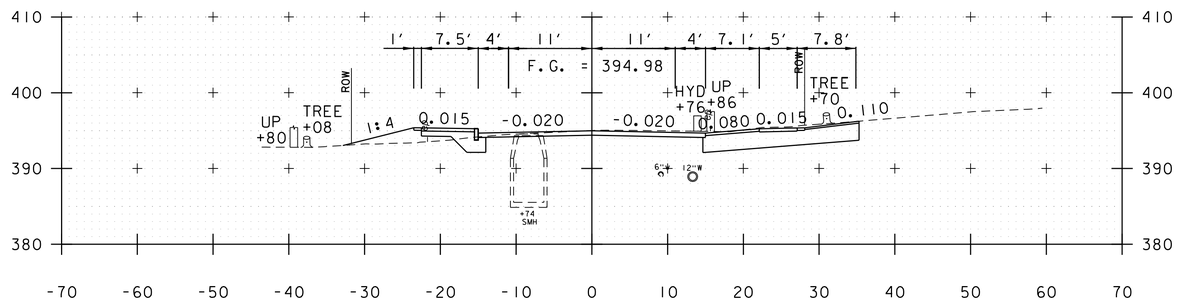

616+50

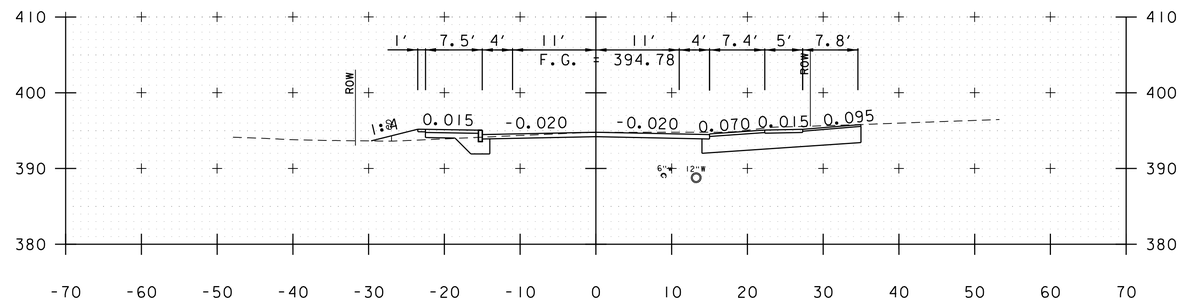

617+50

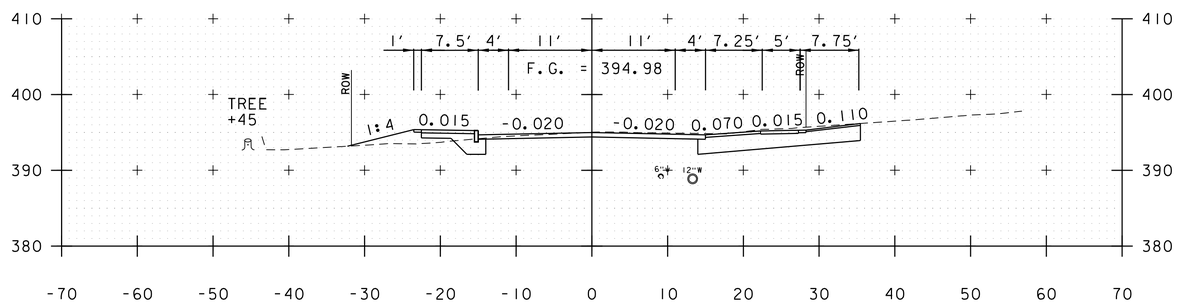

616+45

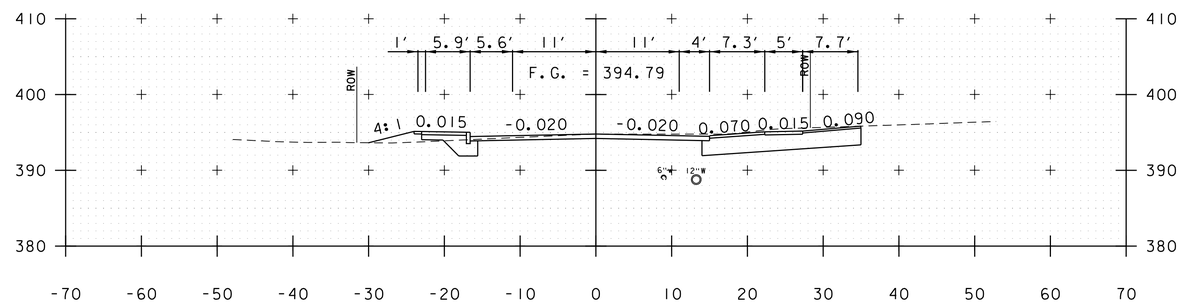

617+46

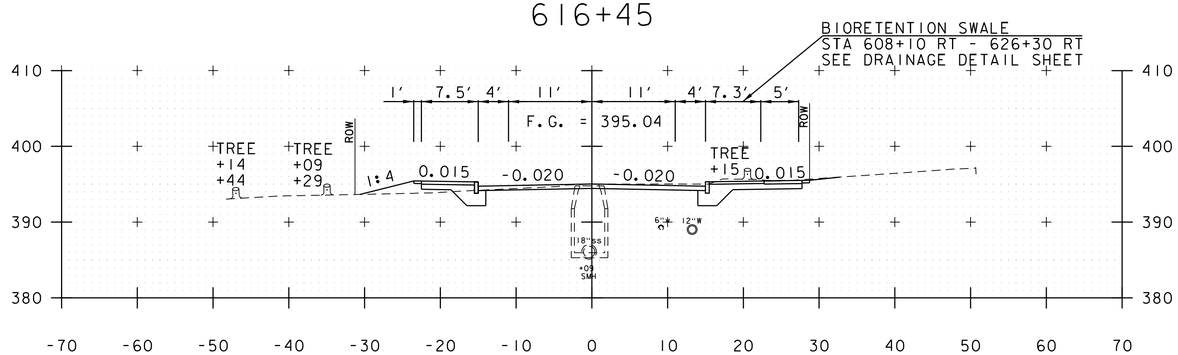

616+00

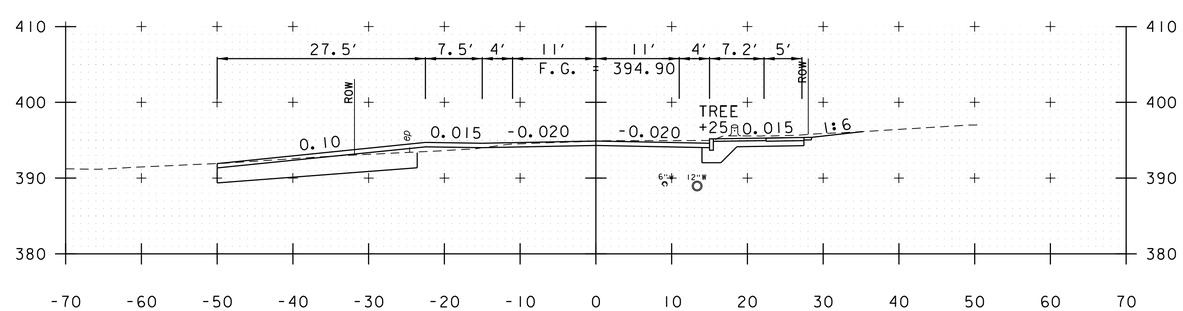

617+00

FEDERAL STREET

PROJECT NAME: ST. ALBANS	
PROJECT NUMBER: HPP 8000(17)	
FILE NAME: 57414_XS_FederalStreet.dgn	PLOT DATE: 3/4/2016
PROJECT LEADER: J.D. SALADINO	DRAWN BY: M.C. SCOTT
DESIGNED BY: M.C. SCOTT	CHECKED BY: M.J. SERVETAS
CROSS SECTIONS	SHEET 190 OF 230

VHB 57414.00

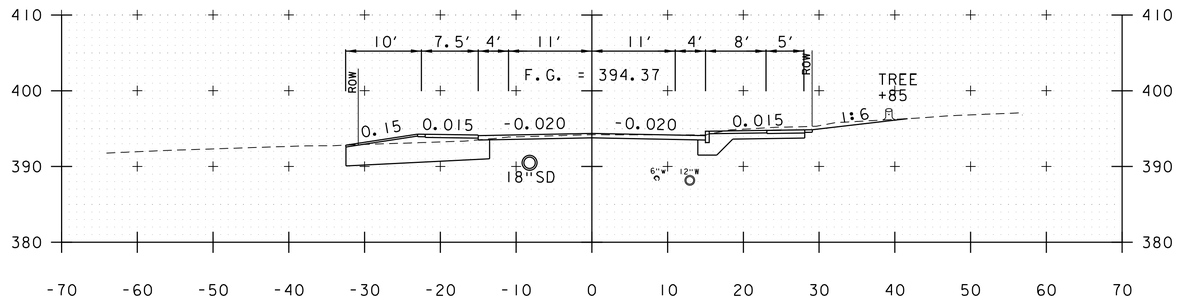

618+71

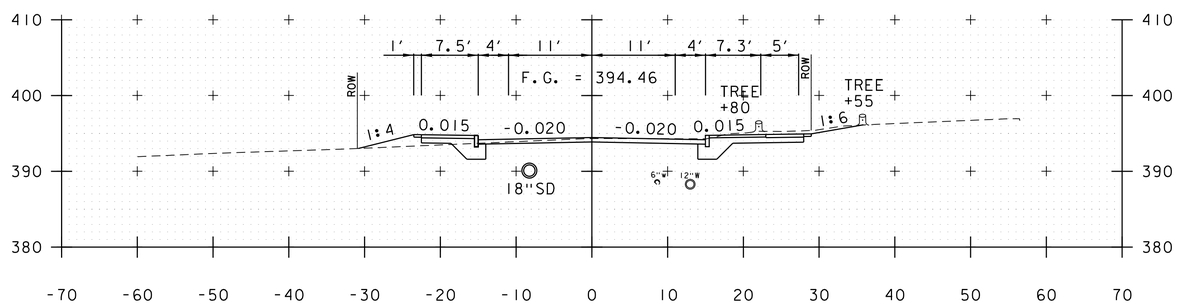

618+50

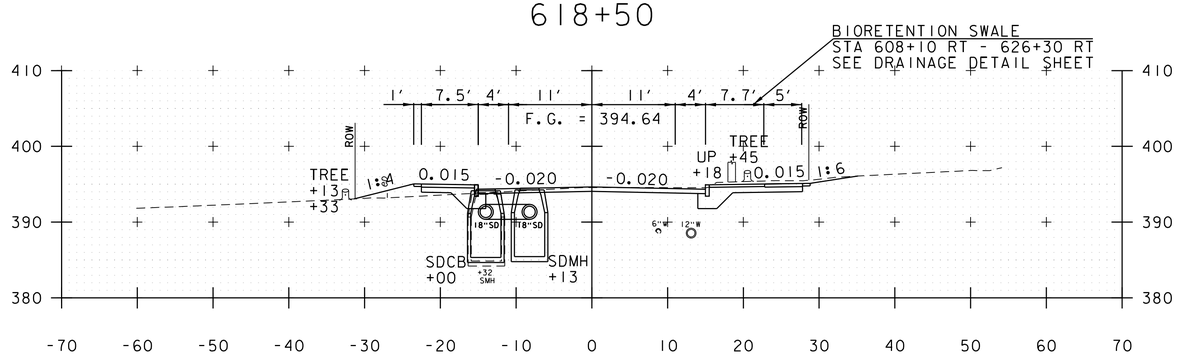

618+00

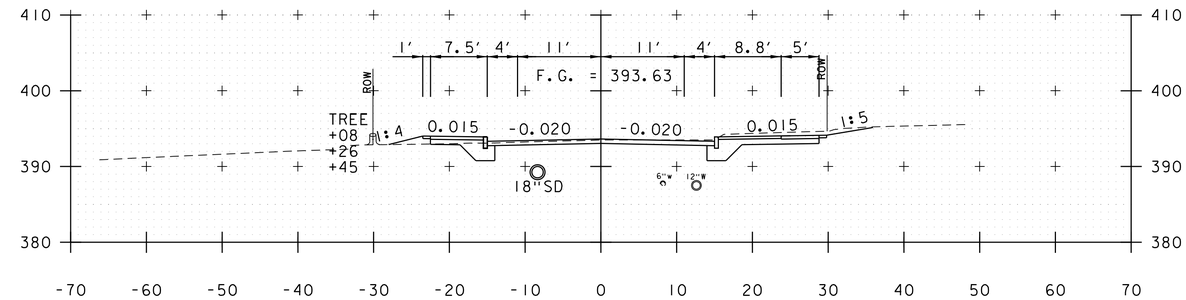

620+00

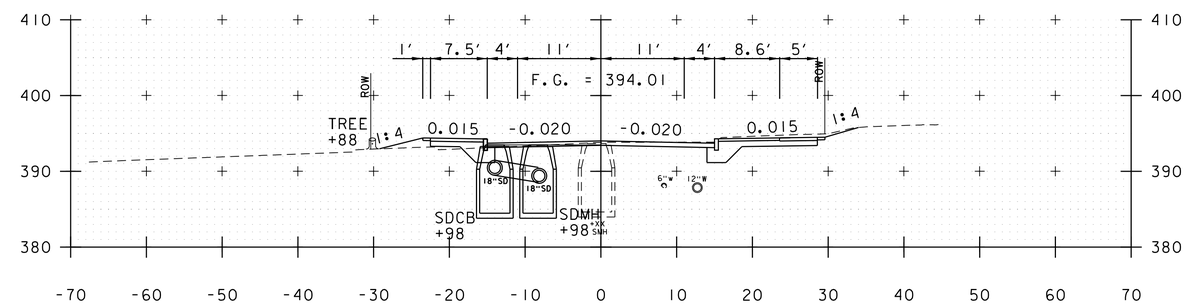

619+50

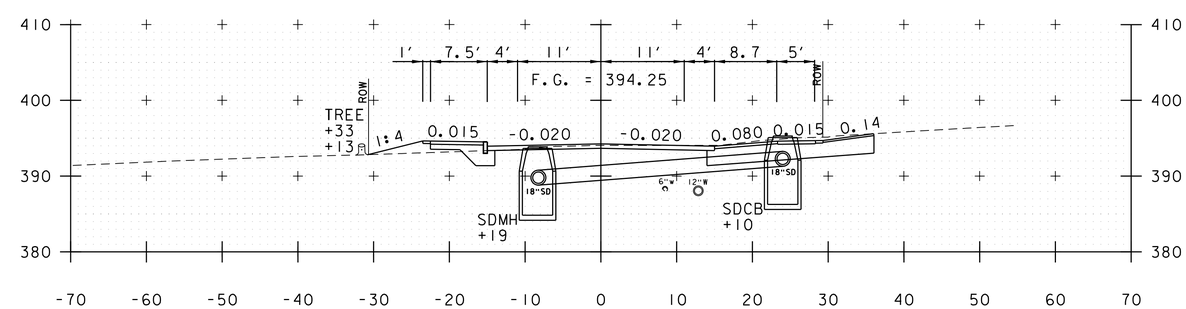

619+00

FEDERAL STREET

PROJECT NAME: ST. ALBANS	
PROJECT NUMBER: HPP 8000(17)	
FILE NAME: 57414_XS_FederalStreet.dgn	PLOT DATE: 3/4/2016
PROJECT LEADER: J.D. SALADINO	DRAWN BY: M.C. SCOTT
DESIGNED BY: M.C. SCOTT	CHECKED BY: M.J. SERVETAS
CROSS SECTIONS	SHEET 191 OF 230

VHB 57414.00

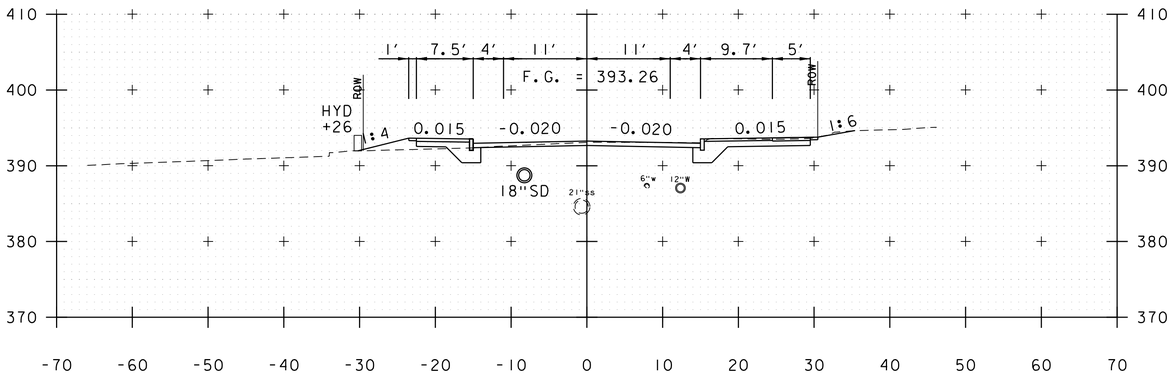

621+00

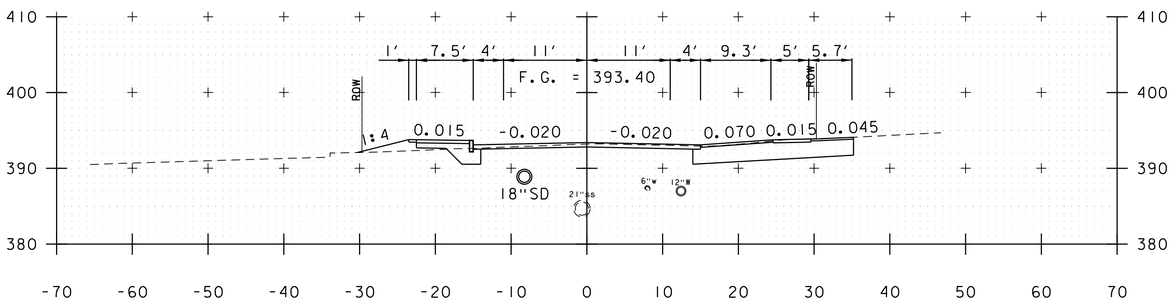

620+71

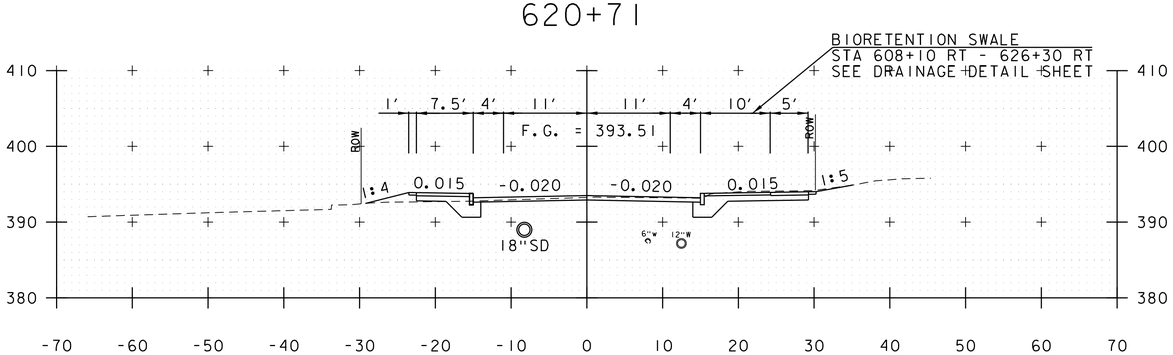

620+50

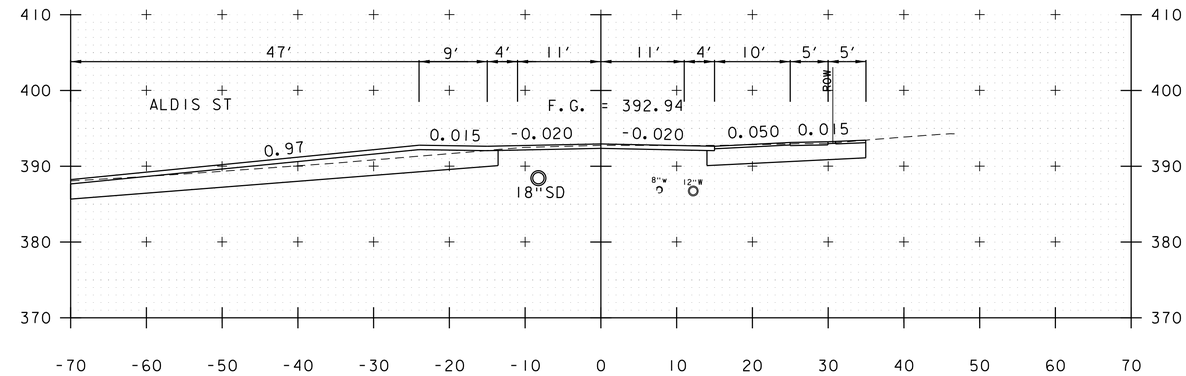

621+62

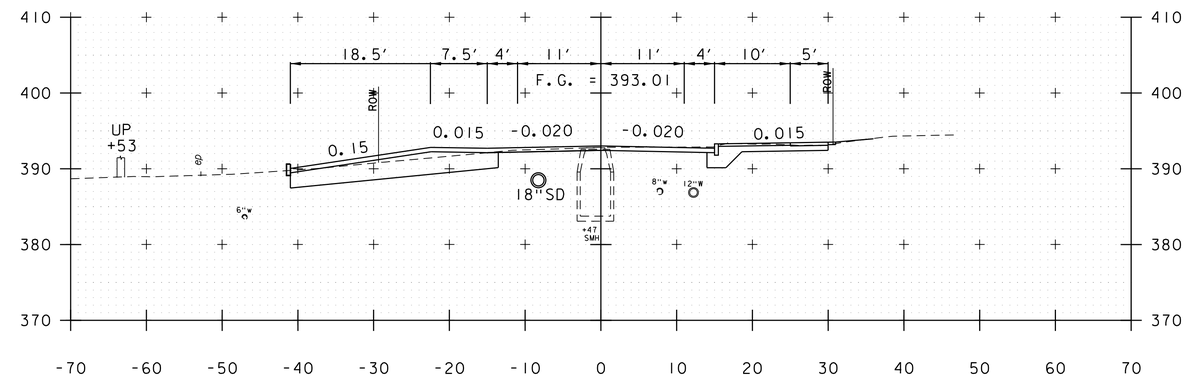

621+50

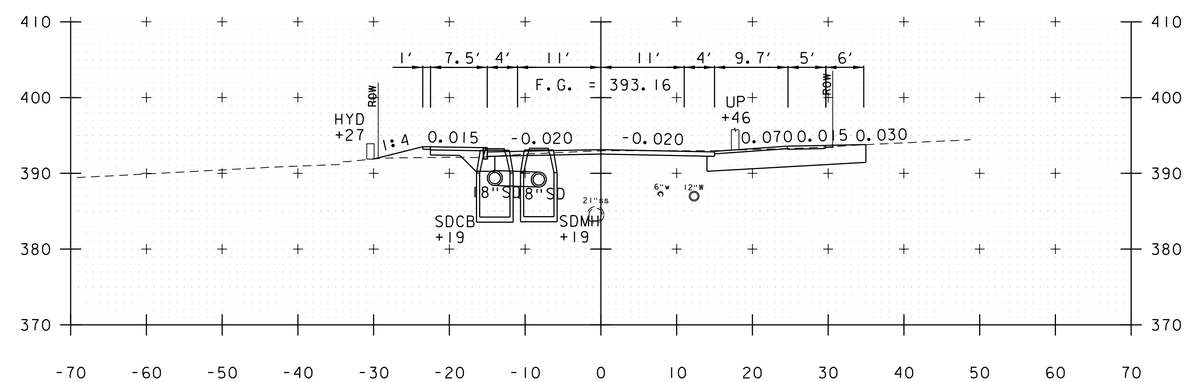

621+19

FEDERAL STREET

PROJECT NAME:	ST. ALBANS
PROJECT NUMBER:	HPP 8000(17)

FILE NAME: 57414_XS_FederalStreet.dgn	PLOT DATE: 3/4/2016
PROJECT LEADER: J.D. SALADINO	DRAWN BY: M.C. SCOTT
DESIGNED BY: M.C. SCOTT	CHECKED BY: M.J. SERVETAS
CROSS SECTIONS	SHEET 192 OF 230

vhb

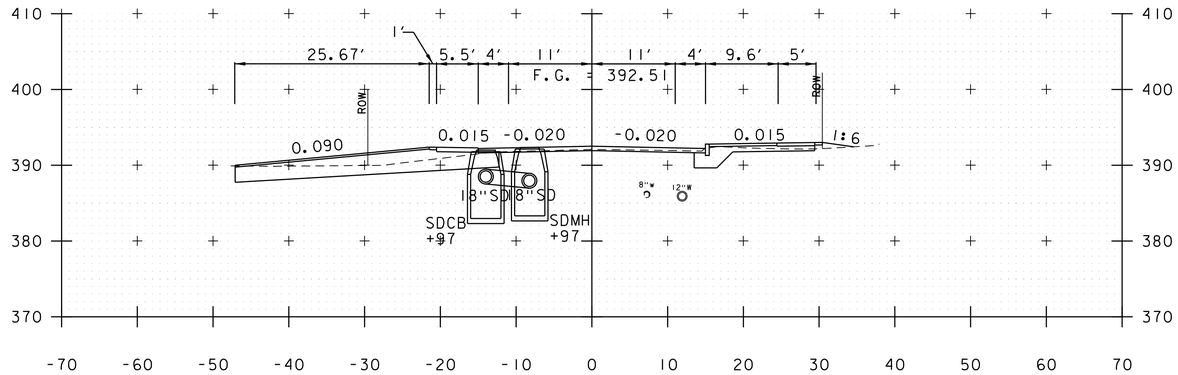

622+50

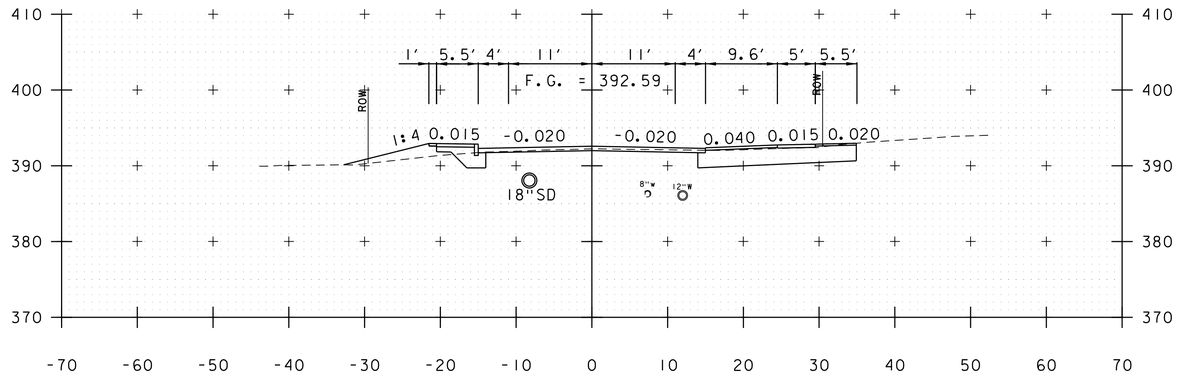

622+29

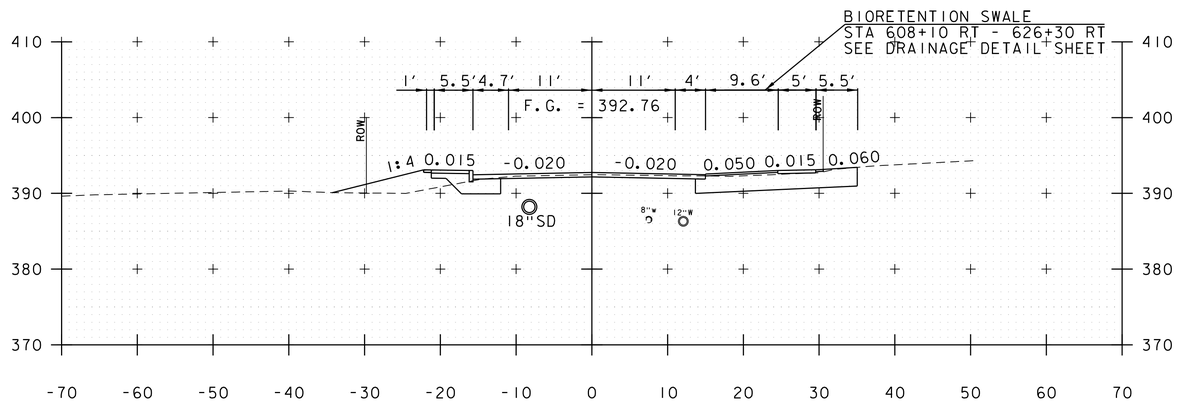

622+00

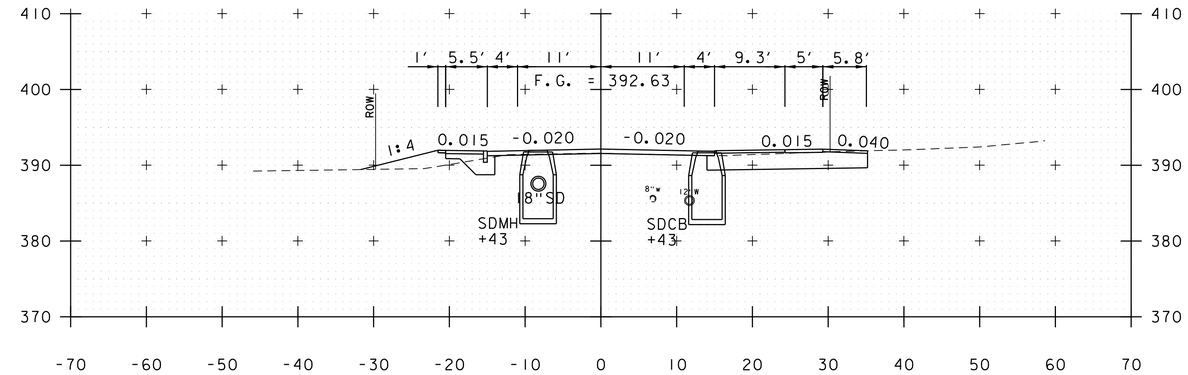

623+25

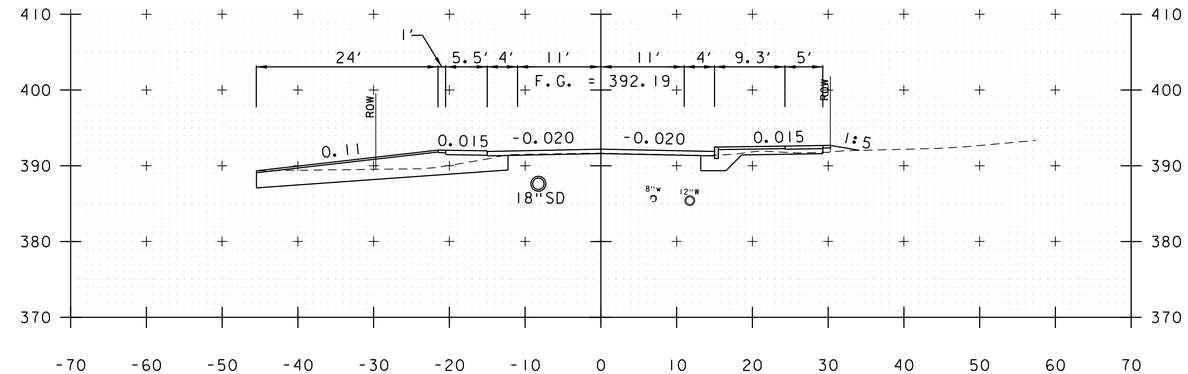

623+12

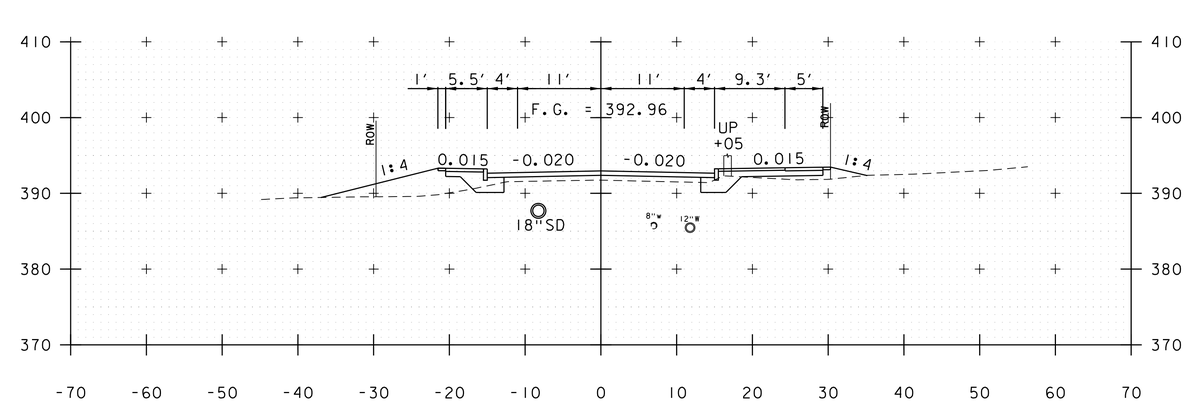

623+00

FEDERAL STREET

PROJECT NAME: ST. ALBANS	
PROJECT NUMBER: HPP 8000(17)	
FILE NAME: 57414_XS_FederalStreet.dgn	PLOT DATE: 3/4/2016
PROJECT LEADER: J.D. SALADINO	DRAWN BY: M.C. SCOTT
DESIGNED BY: M.C. SCOTT	CHECKED BY: M.J. SERVETAS
CROSS SECTIONS	SHEET 193 OF 230

VHB 57414.00

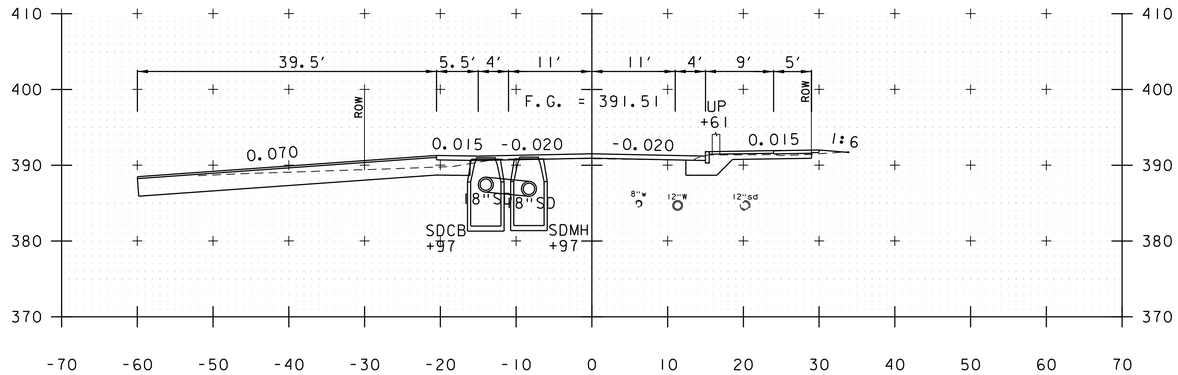

624+50

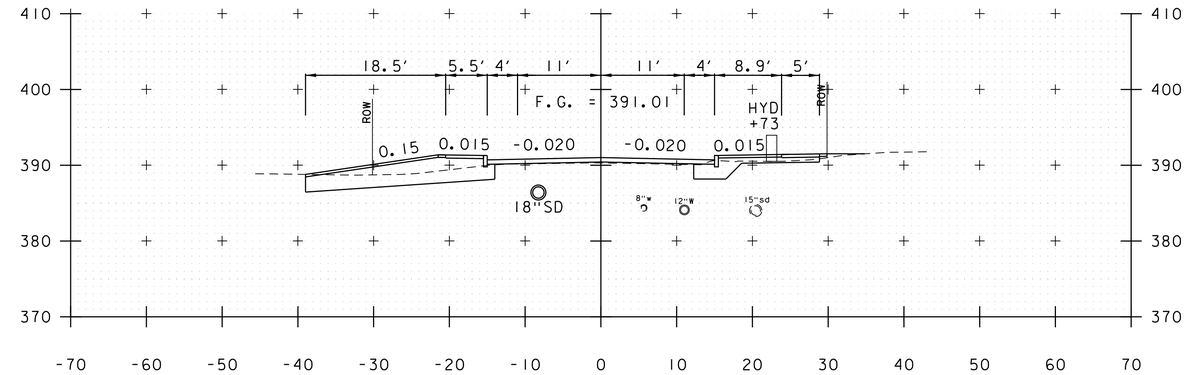

625+50

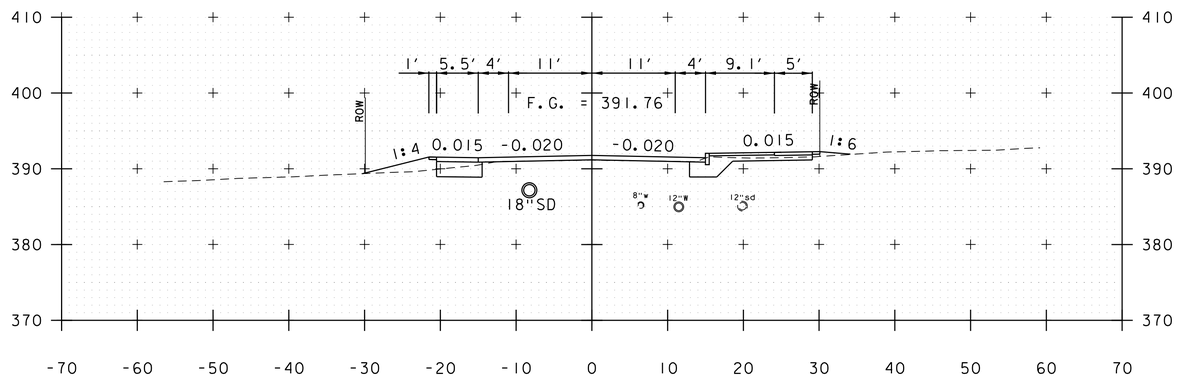

624+00

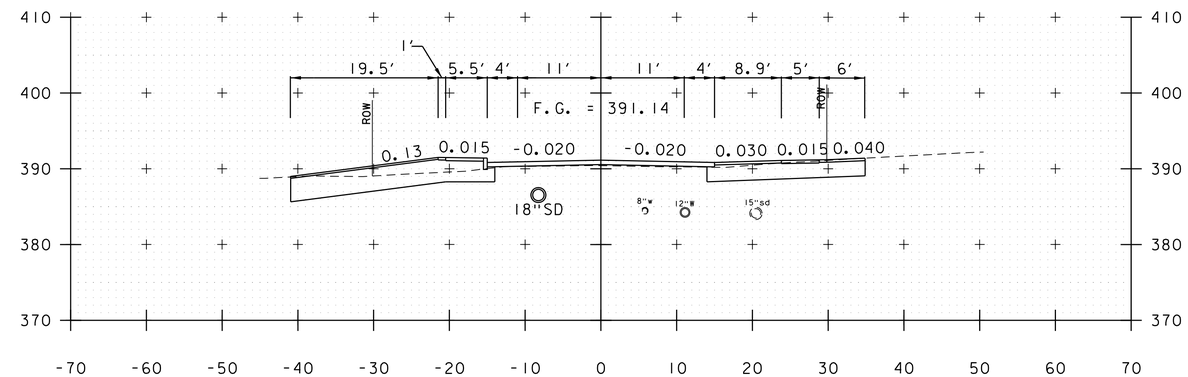

625+22

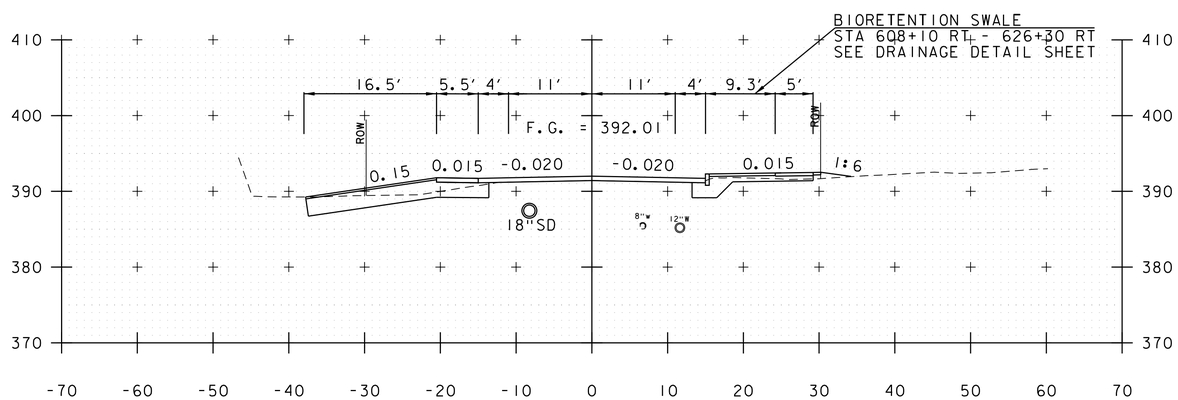

623+50

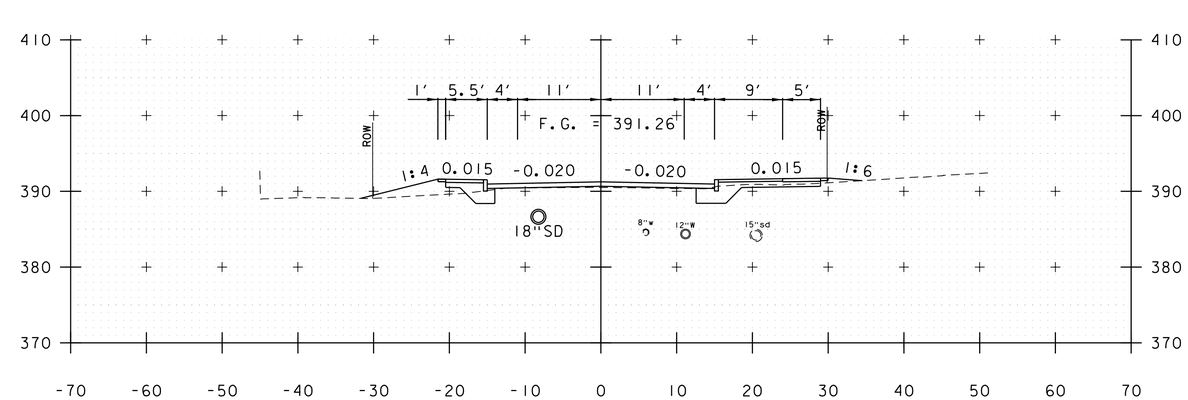

625+00

FEDERAL STREET

PROJECT NAME: ST. ALBANS	
PROJECT NUMBER: HPP 8000(17)	
FILE NAME: 57414_XS_FederalStreet.dgn	PLOT DATE: 3/4/2016
PROJECT LEADER: J.D. SALADINO	DRAWN BY: M.C. SCOTT
DESIGNED BY: M.C. SCOTT	CHECKED BY: M.J. SERVETAS
CROSS SECTIONS	SHEET 194 OF 230

VHB 57414.00

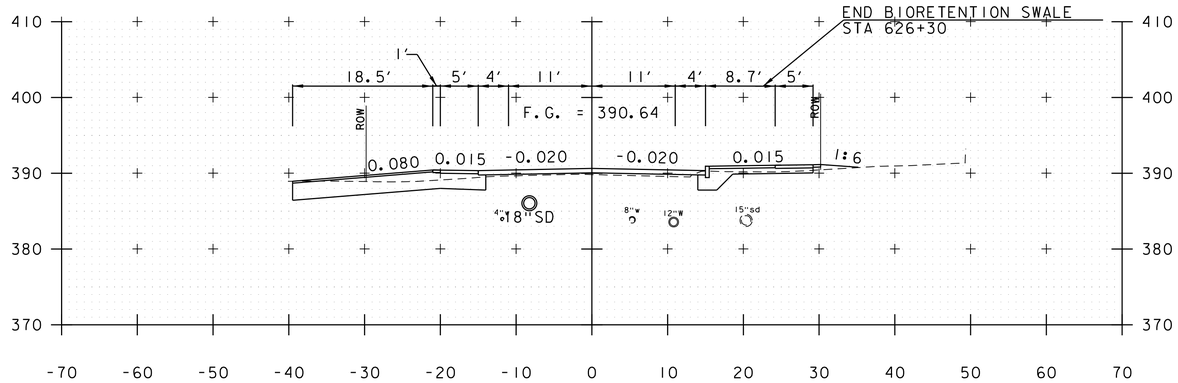

626+23

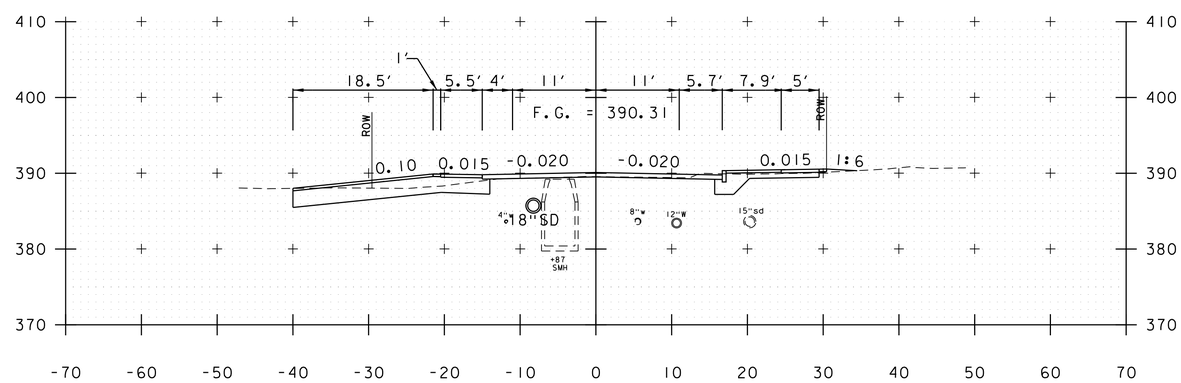

626+75

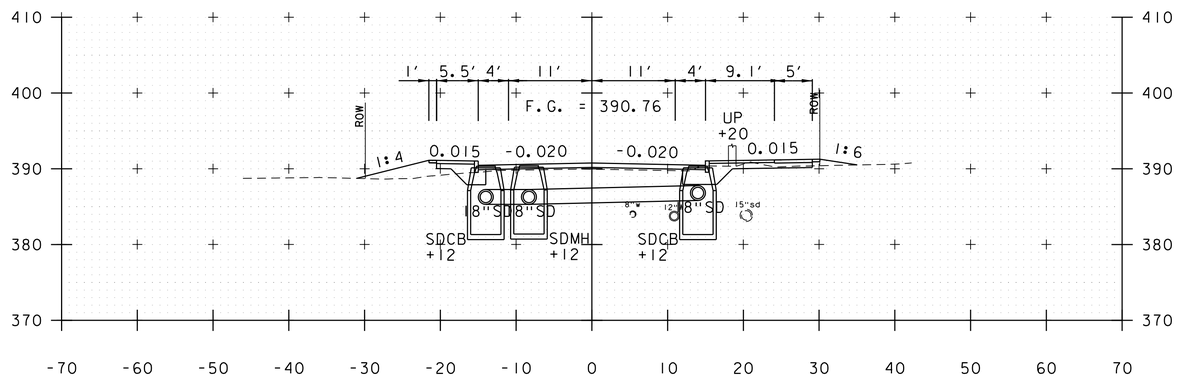

626+00

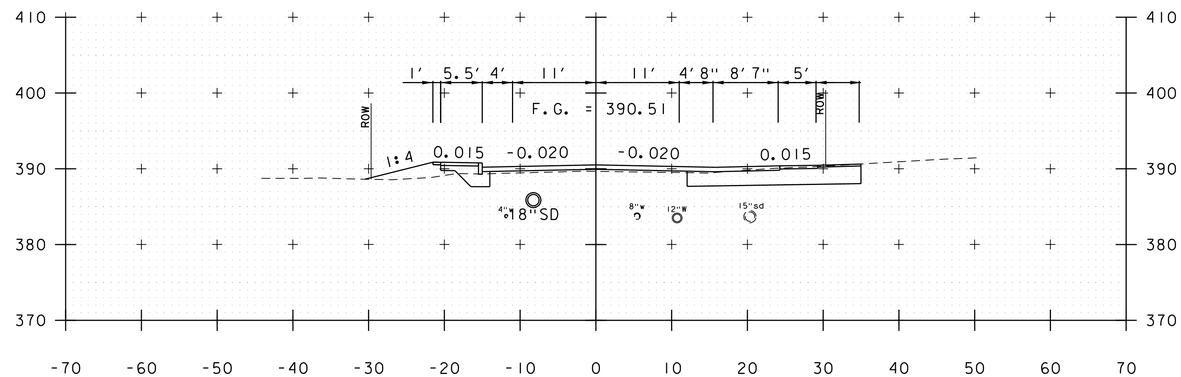

626+50

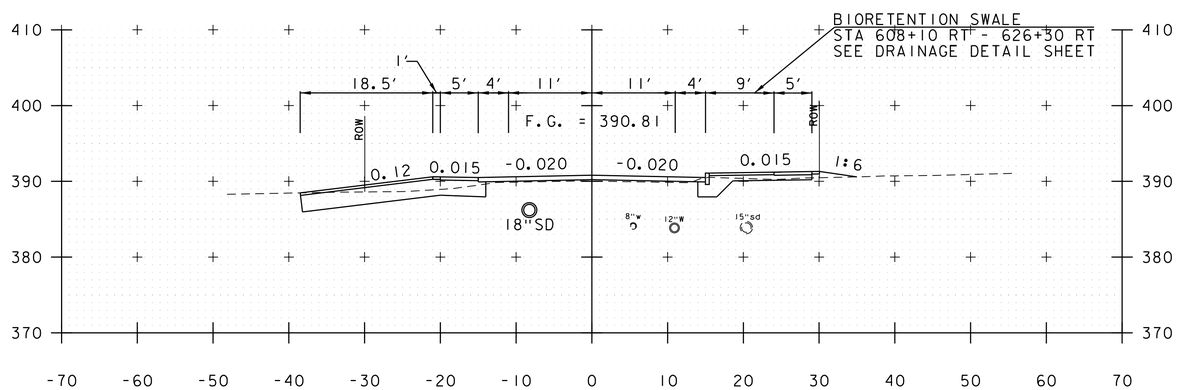

625+90

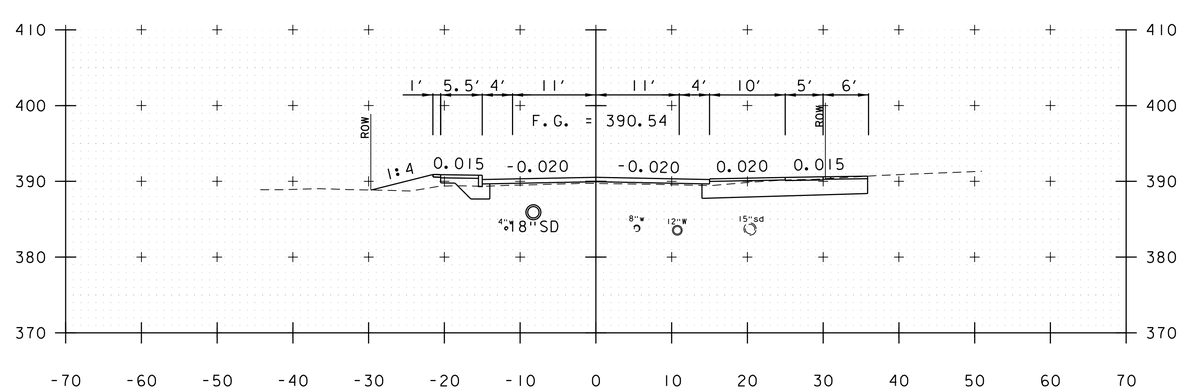

626+42

FEDERAL STREET

PROJECT NAME: ST. ALBANS	
PROJECT NUMBER: HPP 8000(17)	
FILE NAME: 57414_XS_FederalStreet.dgn	PLOT DATE: 3/4/2016
PROJECT LEADER: J.D. SALADINO	DRAWN BY: M.C. SCOTT
DESIGNED BY: M.C. SCOTT	CHECKED BY: M.J. SERVETAS
CROSS SECTIONS	SHEET 195 OF 230

VHB 57414.00

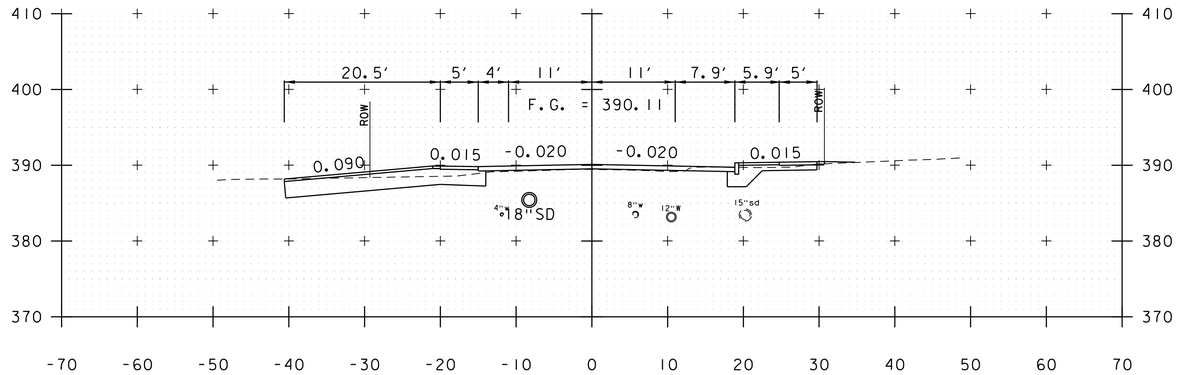

627+28

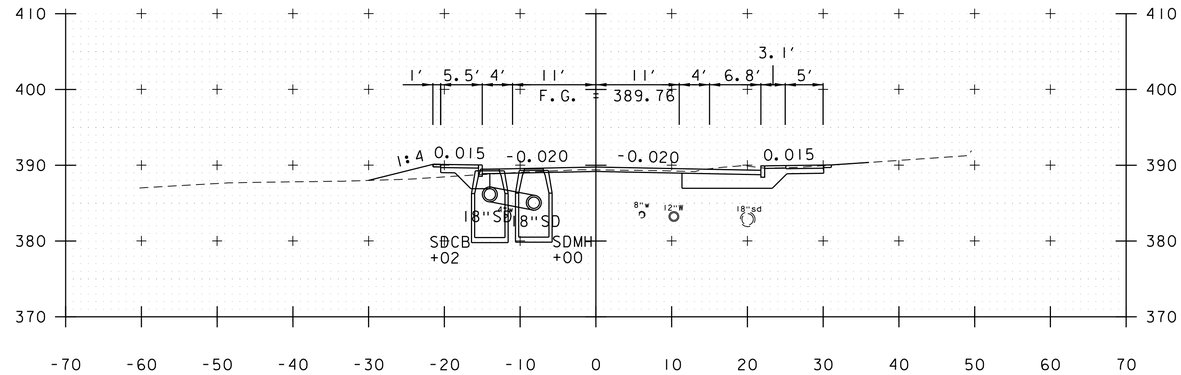

628+00

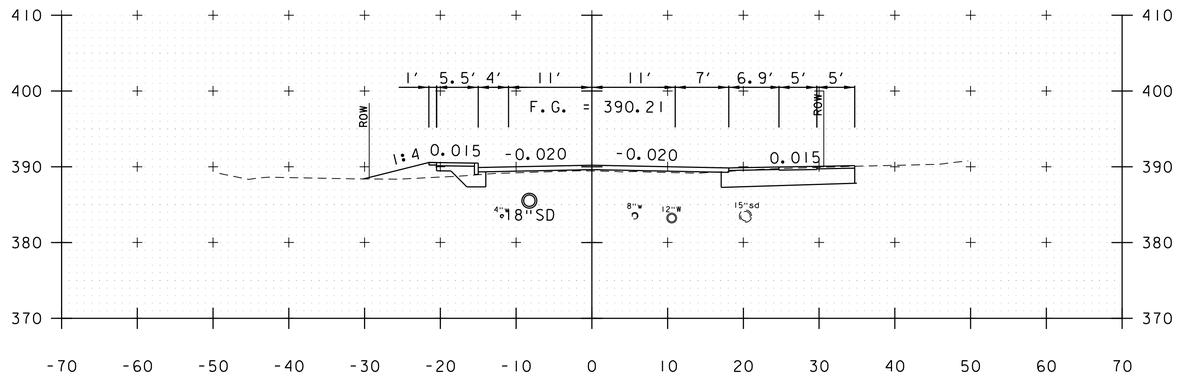

627+08

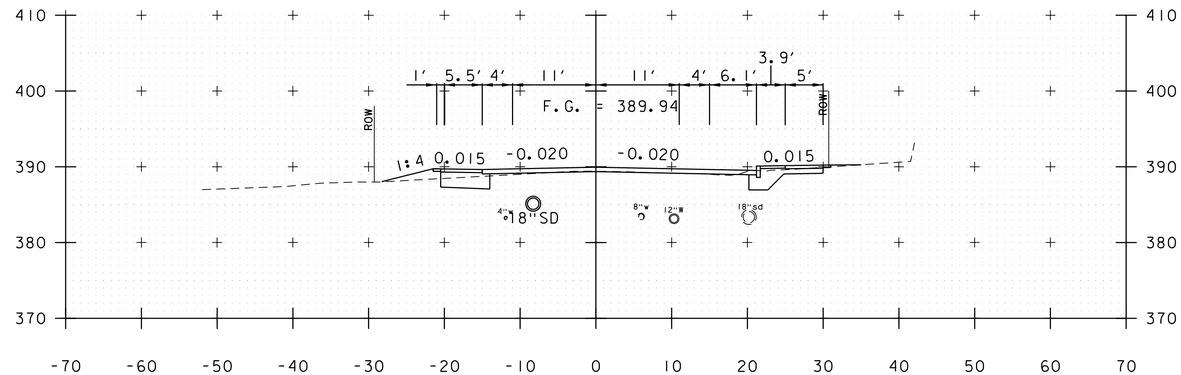

627+86

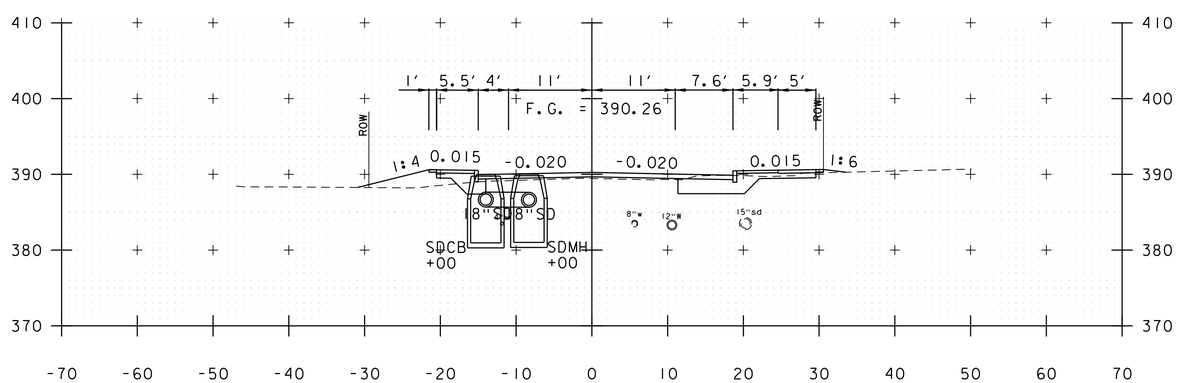

627+00

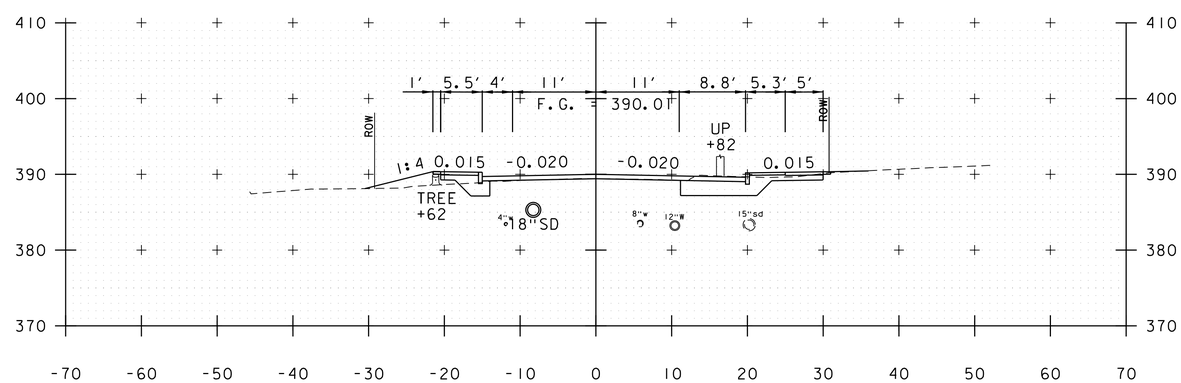

627+50

FEDERAL STREET

PROJECT NAME: ST. ALBANS	
PROJECT NUMBER: HPP 8000(17)	
FILE NAME: 57414_XS_FederalStreet.dgn	PLOT DATE: 3/4/2016
PROJECT LEADER: J.D. SALADINO	DRAWN BY: M.C. SCOTT
DESIGNED BY: M.C. SCOTT	CHECKED BY: M.J. SERVETAS
CROSS SECTIONS	SHEET 196 OF 230

VHB 57414.00

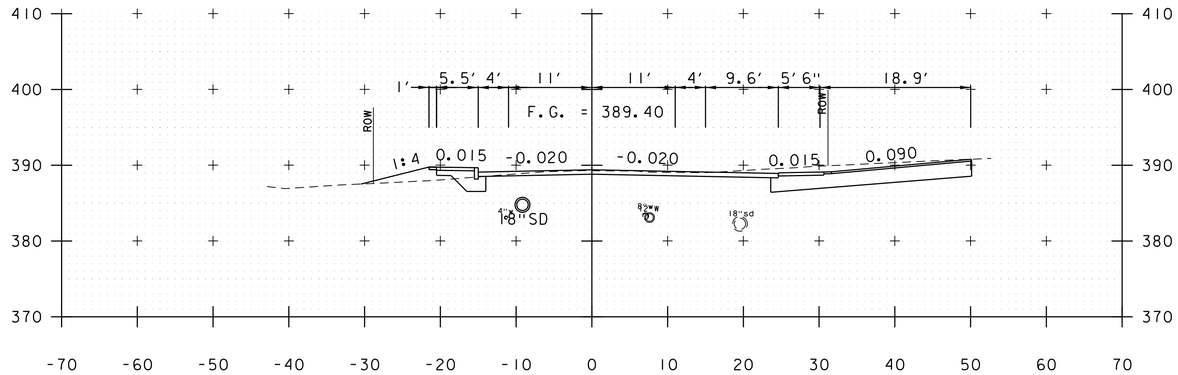

628+70

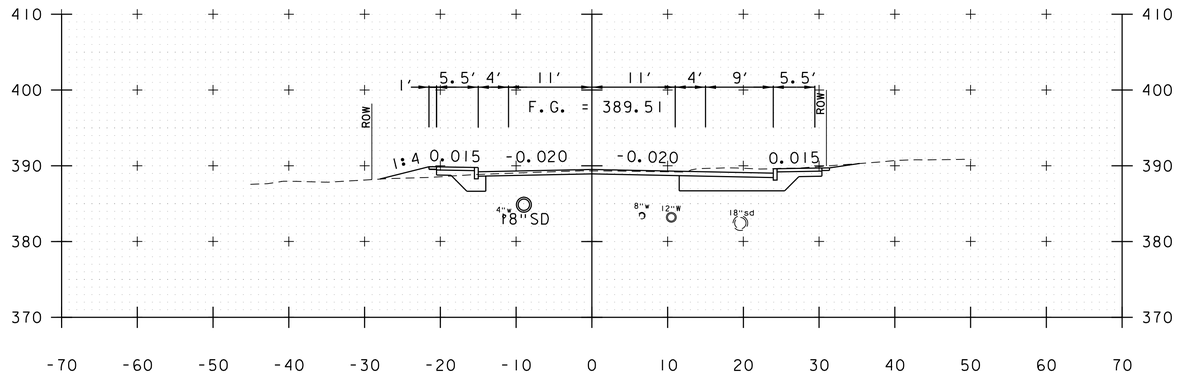

628+50

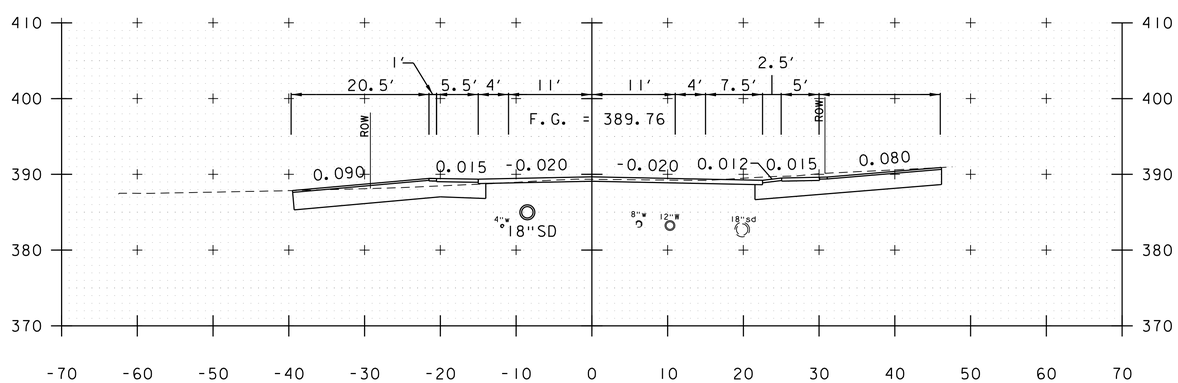

628+20

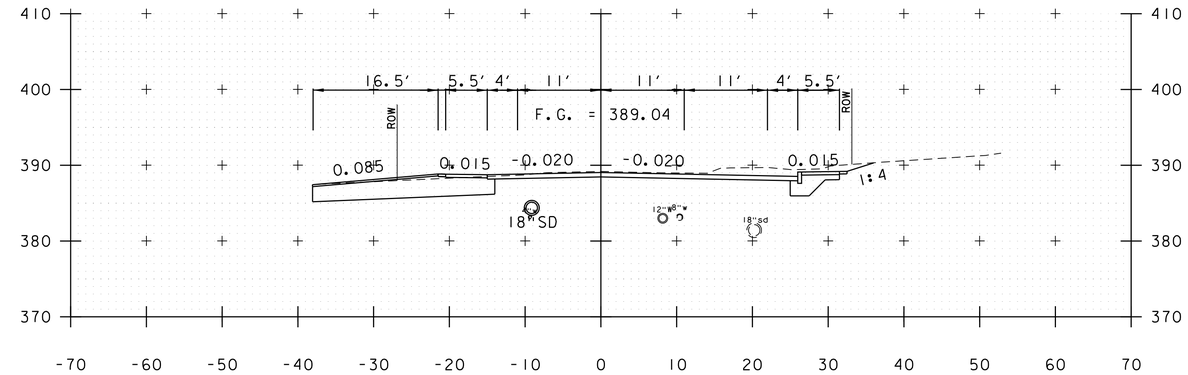

629+67

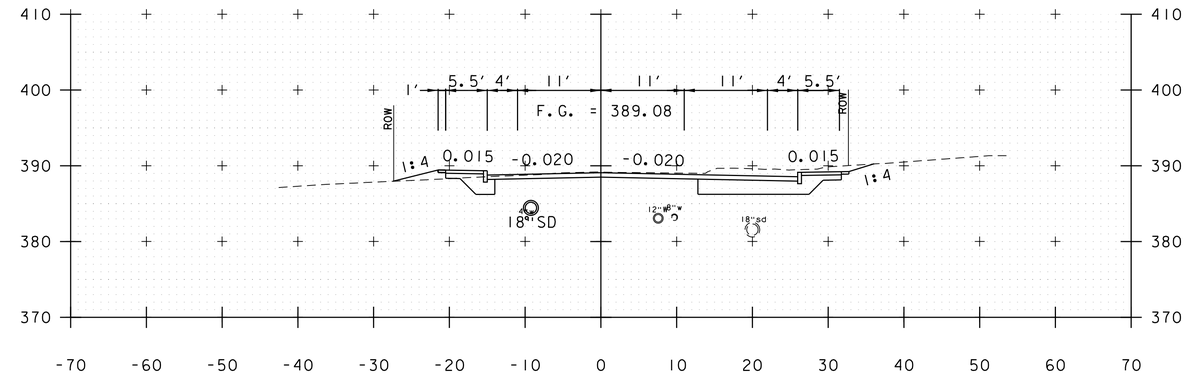

629+50

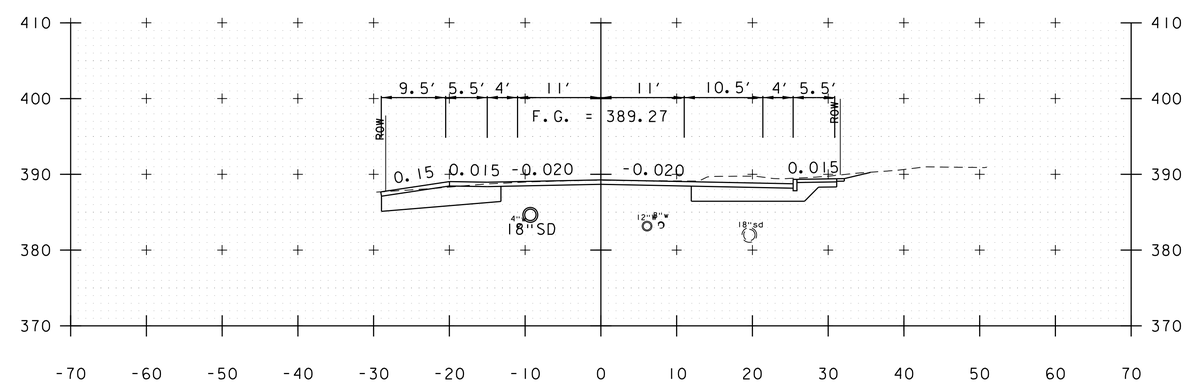

629+00

FEDERAL STREET

PROJECT NAME: ST. ALBANS	
PROJECT NUMBER: HPP 8000(17)	
FILE NAME: 57414_XS_FederalStreet.dgn	PLOT DATE: 3/4/2016
PROJECT LEADER: J.D. SALADINO	DRAWN BY: M.C. SCOTT
DESIGNED BY: M.C. SCOTT	CHECKED BY: M.J. SERVETAS
CROSS SECTIONS	SHEET 197 OF 230

VHB 57414.00

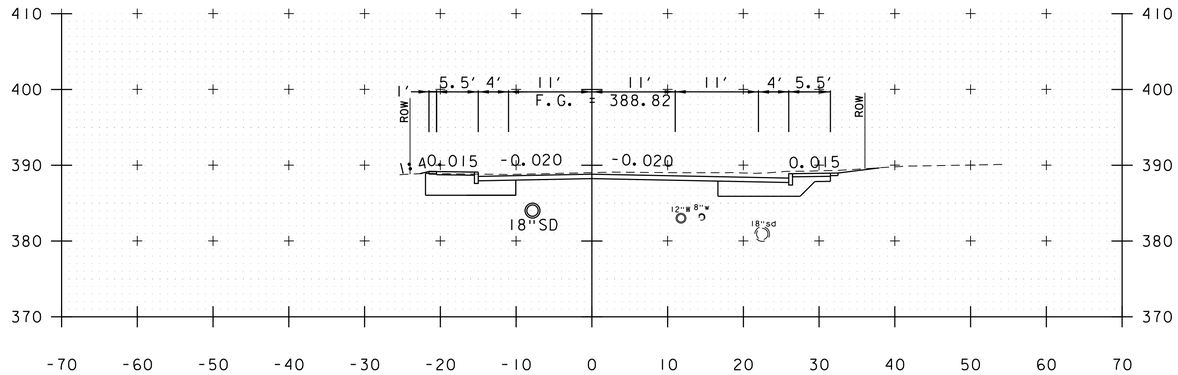

630+50

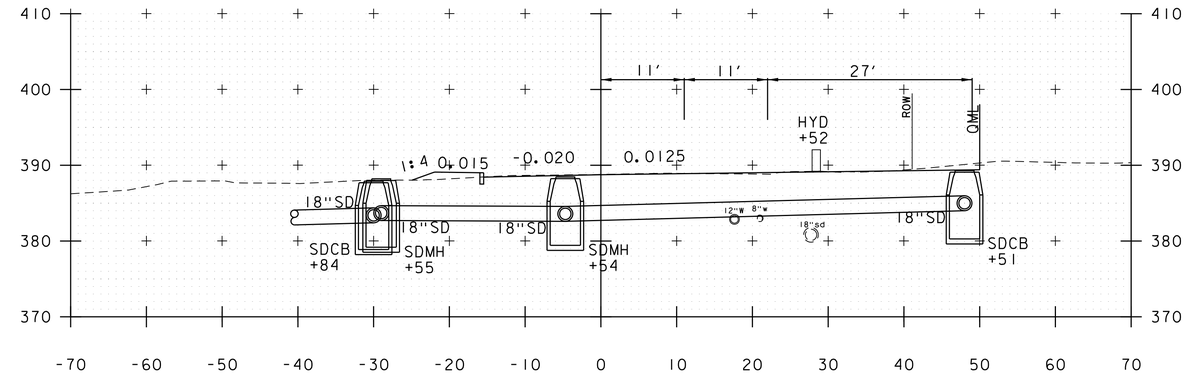

631+50

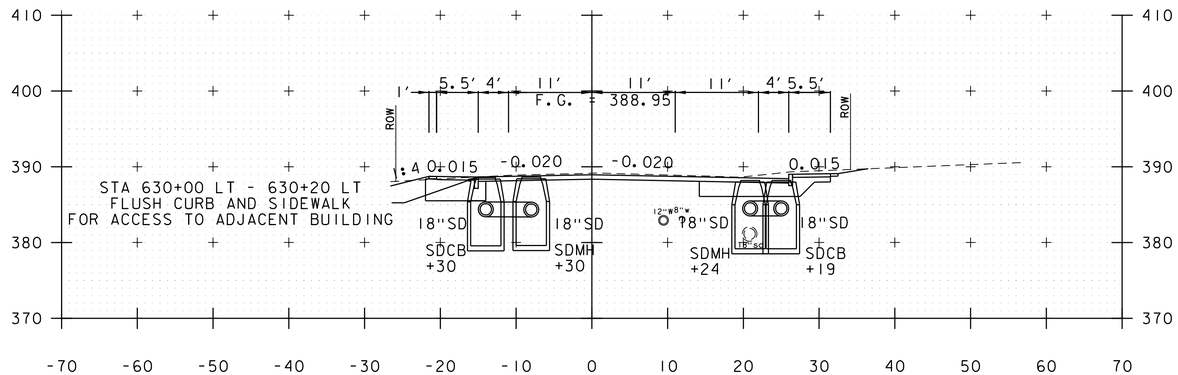

630+00

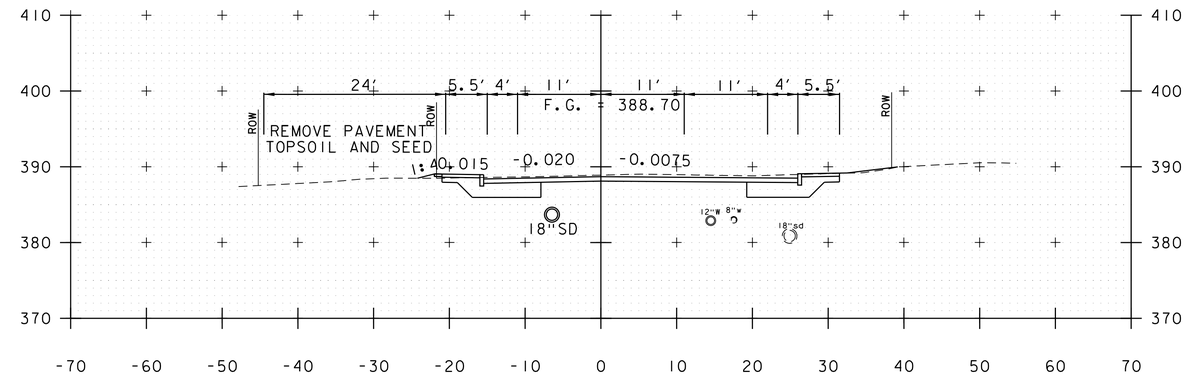

631+00

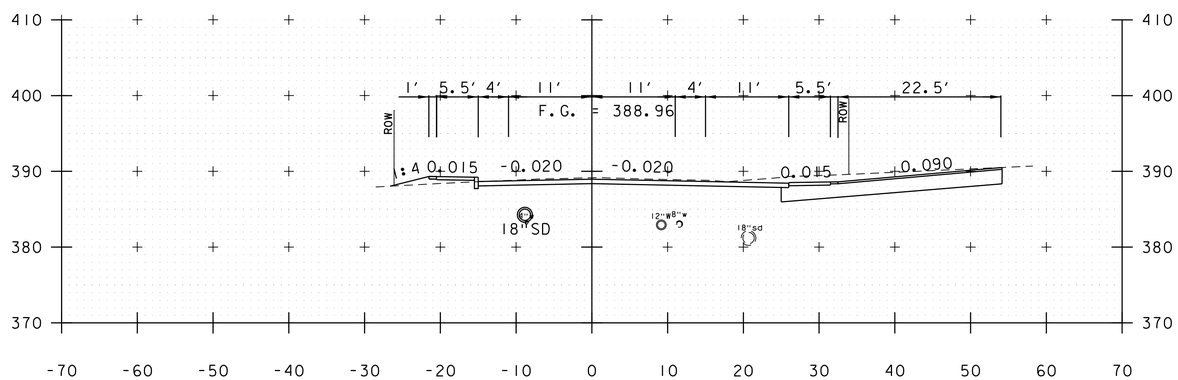

629+90

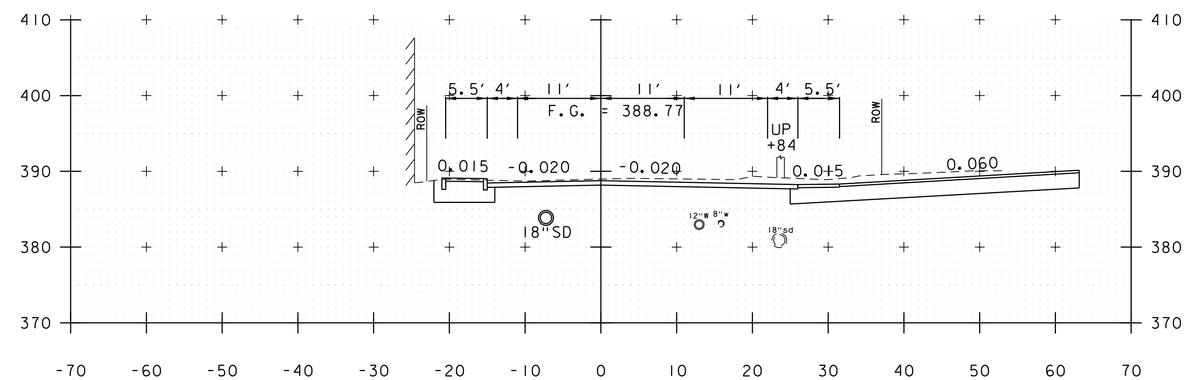

630+71

FEDERAL STREET

PROJECT NAME: ST. ALBANS	
PROJECT NUMBER: HPP 8000(17)	
FILE NAME: 57414_XS_FederalStreet.dgn	PLOT DATE: 3/4/2016
PROJECT LEADER: J.D. SALADINO	DRAWN BY: M.C. SCOTT
DESIGNED BY: M.C. SCOTT	CHECKED BY: M.J. SERVETAS
CROSS SECTIONS	SHEET 198 OF 230

VHB 57414.00

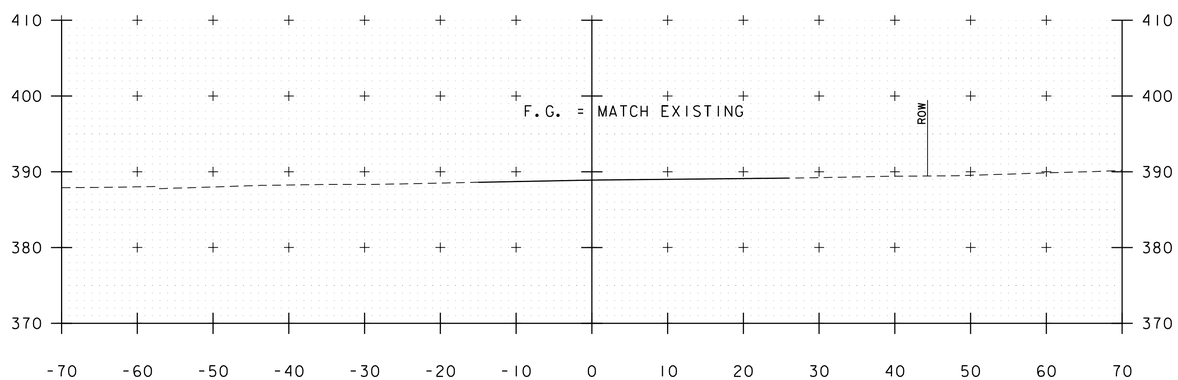

632+22

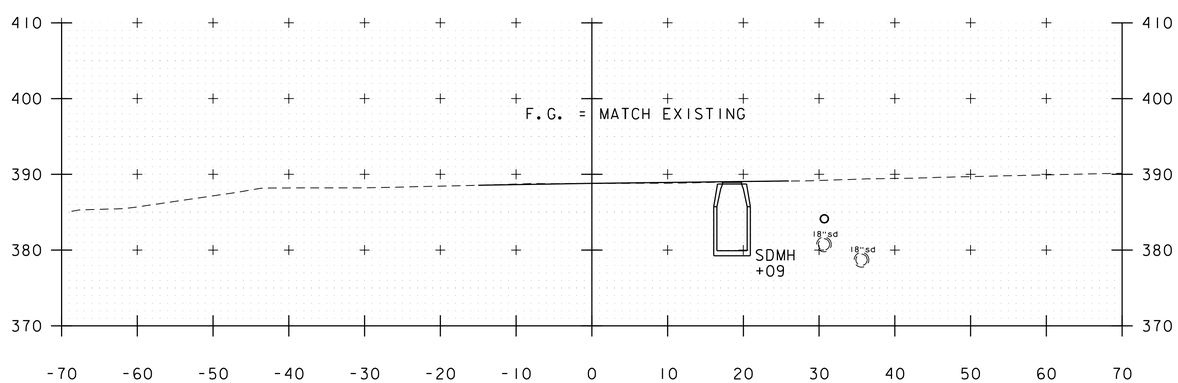

632+00

FEDERAL STREET

PROJECT NAME: ST. ALBANS	
PROJECT NUMBER: HPP 8000(17)	
FILE NAME: 57414_XS_FederalStreet.dgn	PLOT DATE: 3/4/2016
PROJECT LEADER: J.D. SALADINO	DRAWN BY: M.C. SCOTT
DESIGNED BY: M.C. SCOTT	CHECKED BY: M.J. SERVETAS
CROSS SECTIONS	SHEET 199 OF 230

VHB 57414.00

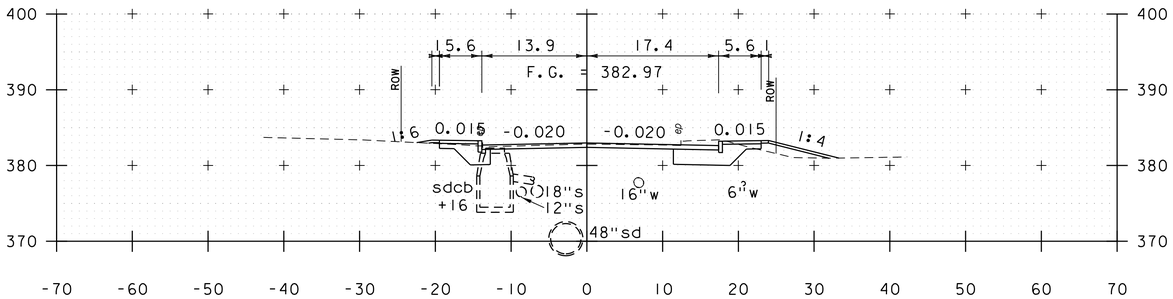

801+00

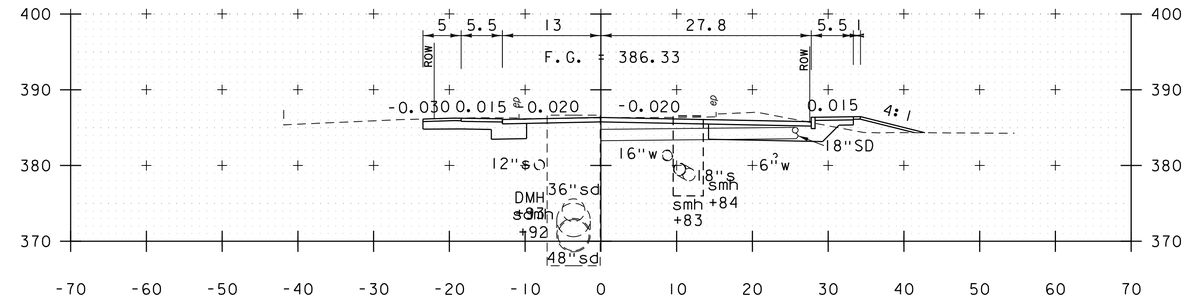

801+81

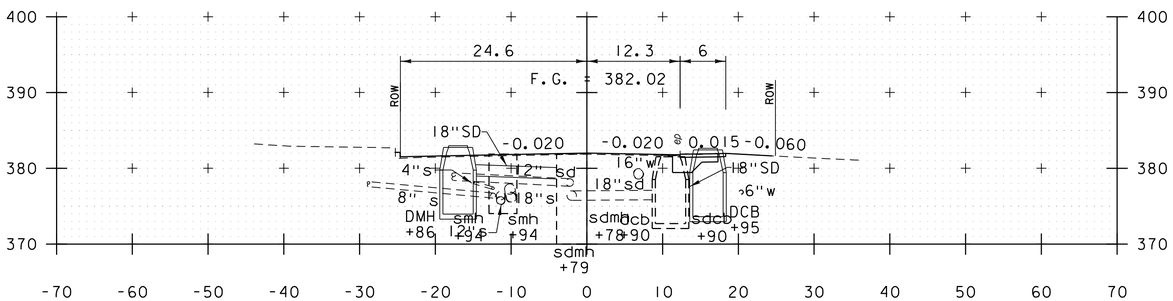

800+77

STATION 800+71 RT
BEGIN 6.5:1 TAPER

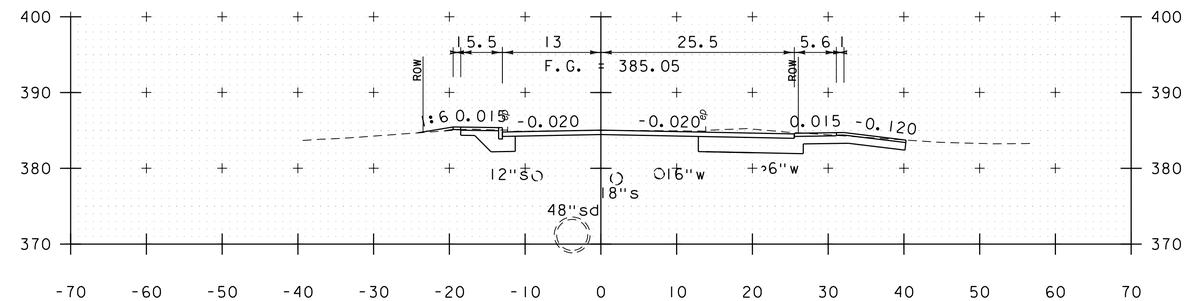

801+50

STATION 801+45 RT
END 6.5:1 TAPER

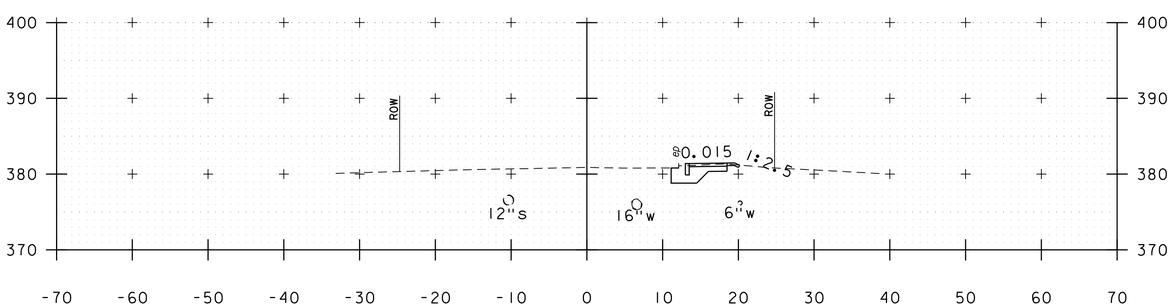

800+50

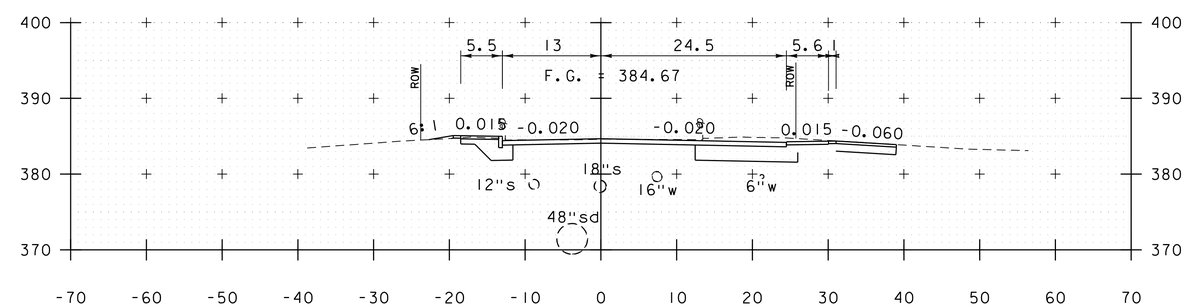

801+41

LOWER NEWTON ROAD

PROJECT NAME: ST. ALBANS	
PROJECT NUMBER: HPP 8000(17)	
FILE NAME: 57414_XS_LowerNewton.dgn	PLOT DATE: 3/4/2016
PROJECT LEADER: J.D. SALADINO	DRAWN BY: O.M. DARISSE
DESIGNED BY: D.M. PECK	CHECKED BY: M.J. SERVETAS
LOWER NEWTON ROAD CROSS SECTIONS	SHEET 200 OF 230

vhb

VHB 57414.00

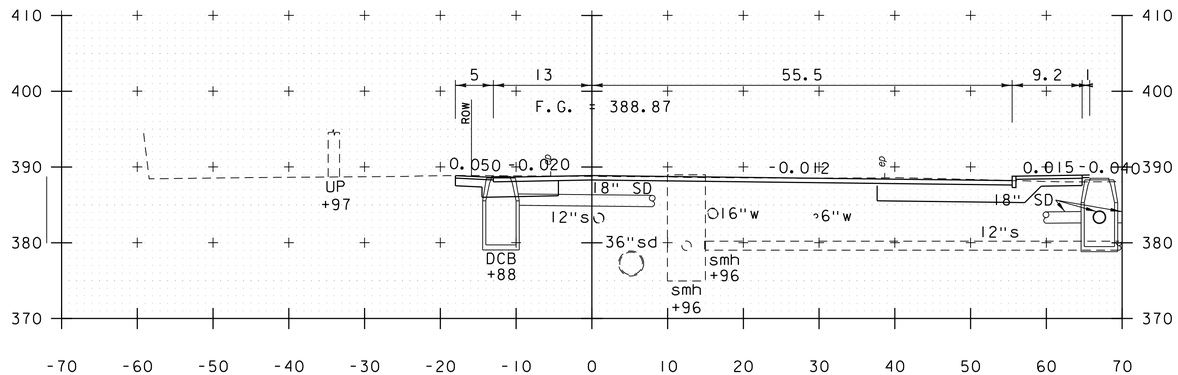

802+69

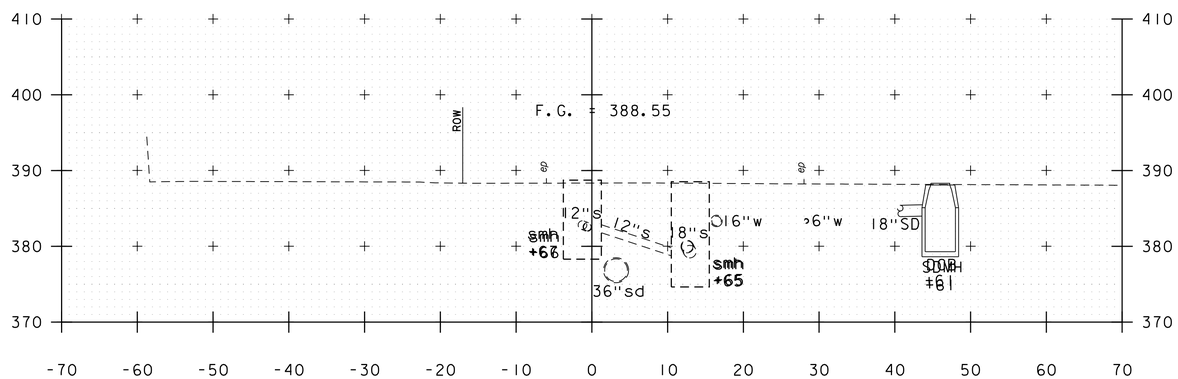

802+50

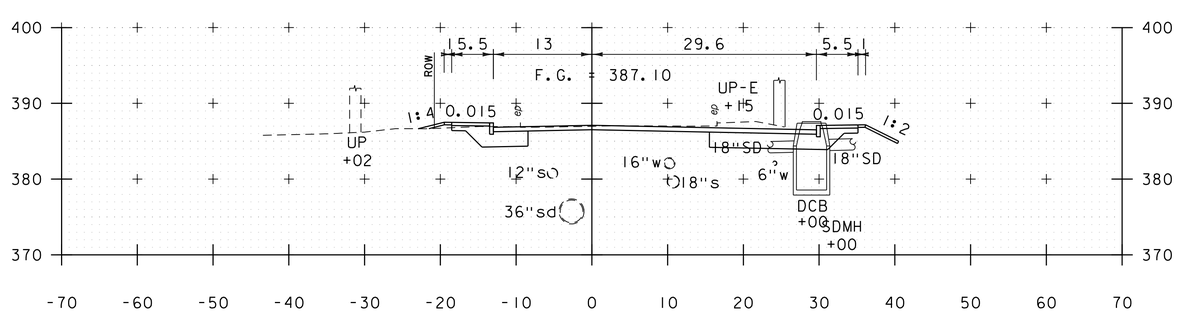

802+00

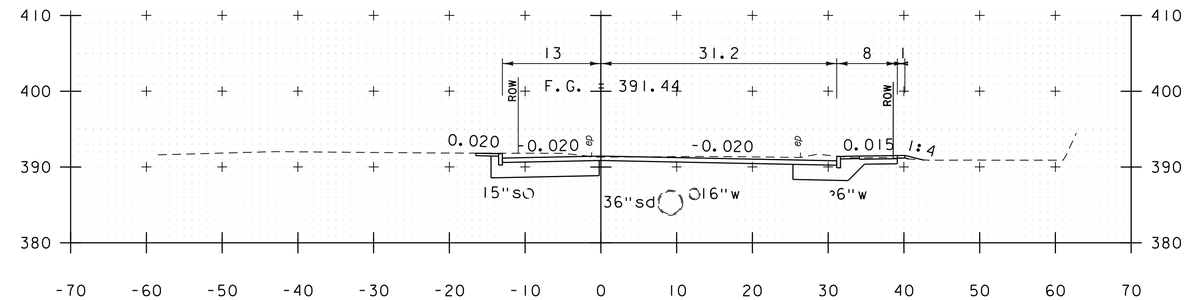

804+00

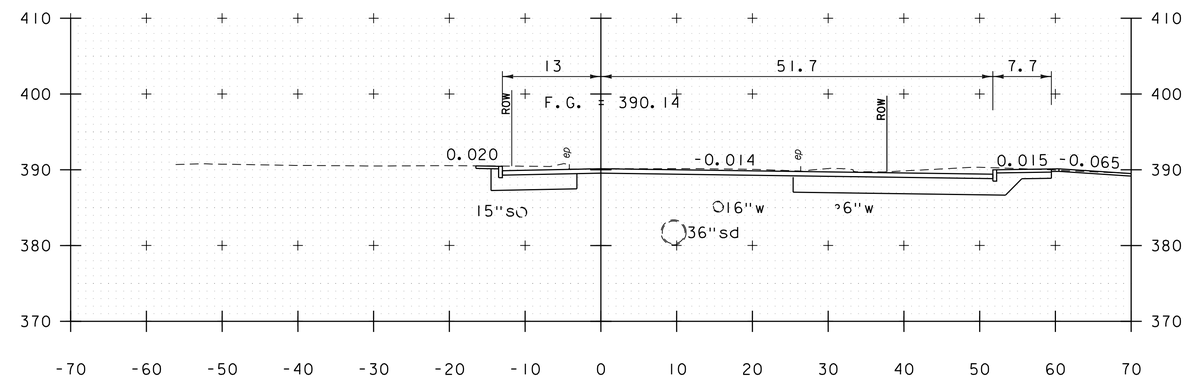

803+50

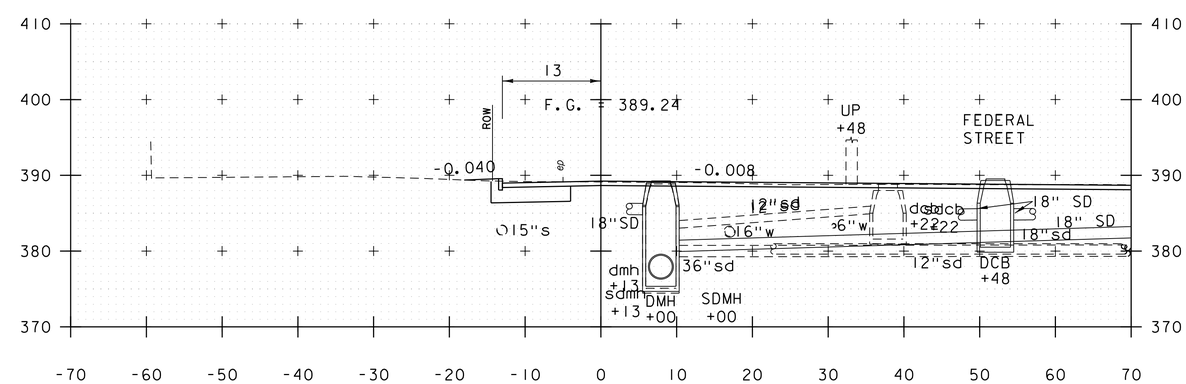

803+00

LOWER NEWTON ROAD

PROJECT NAME: ST. ALBANS	
PROJECT NUMBER: HPP 8000(17)	
FILE NAME: 57414_XS_LowerNewton.dgn	PLOT DATE: 3/4/2016
PROJECT LEADER: J.D. SALADINO	DRAWN BY: O.M. DARISSE
DESIGNED BY: D.M. PECK	CHECKED BY: M.J. SERVETAS
LOWER NEWTON ROAD CROSS SECTIONS	SHEET 201 OF 230

vhb

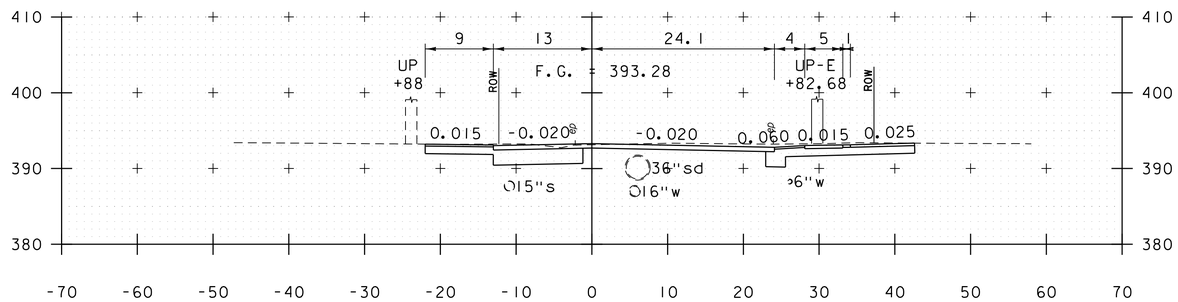

804+68

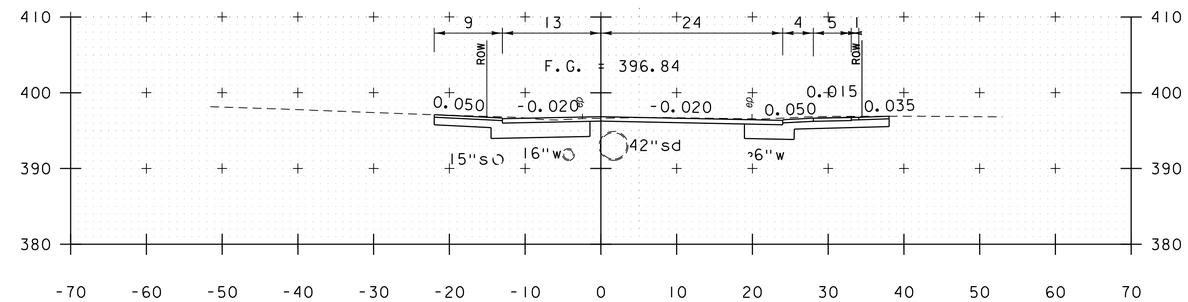

805+59

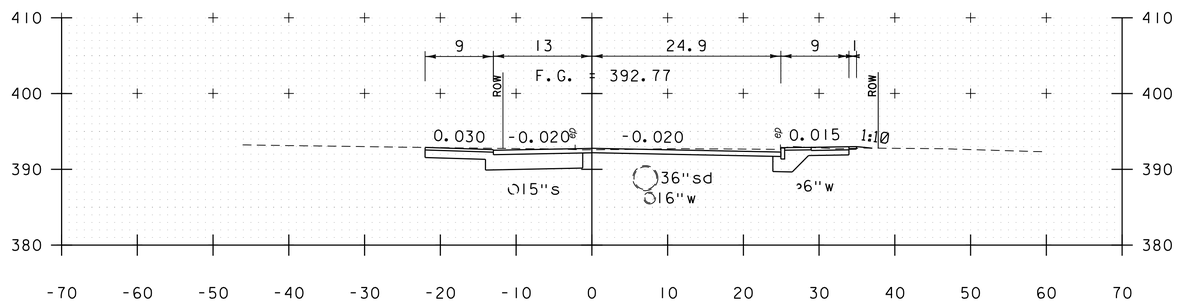

804+50

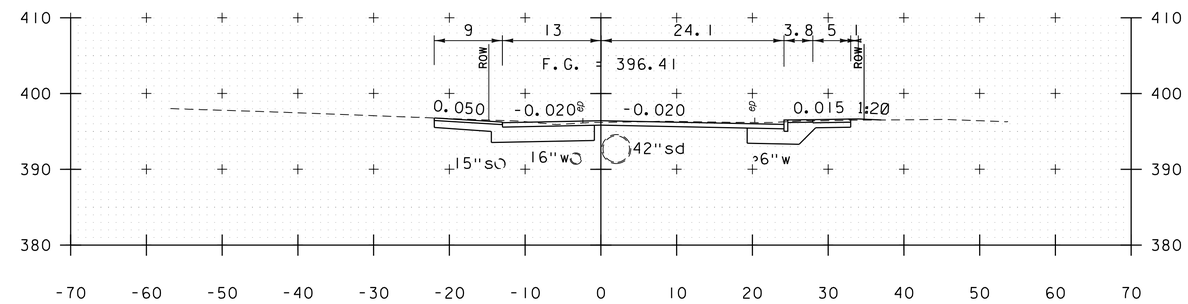

805+50

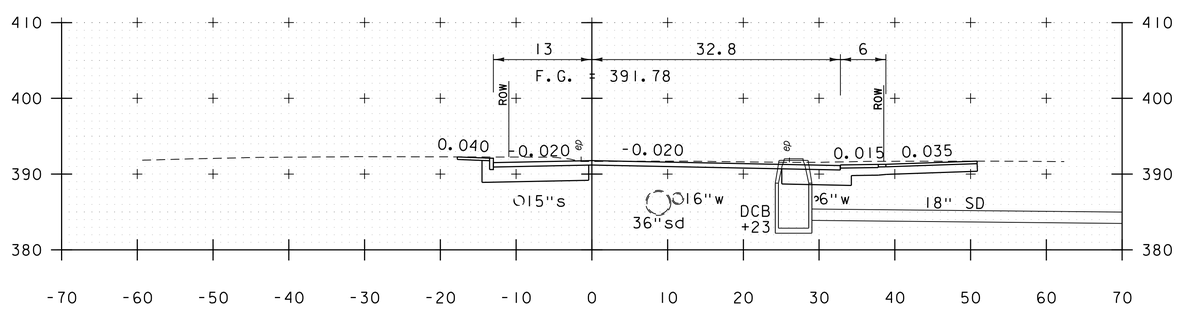

804+13

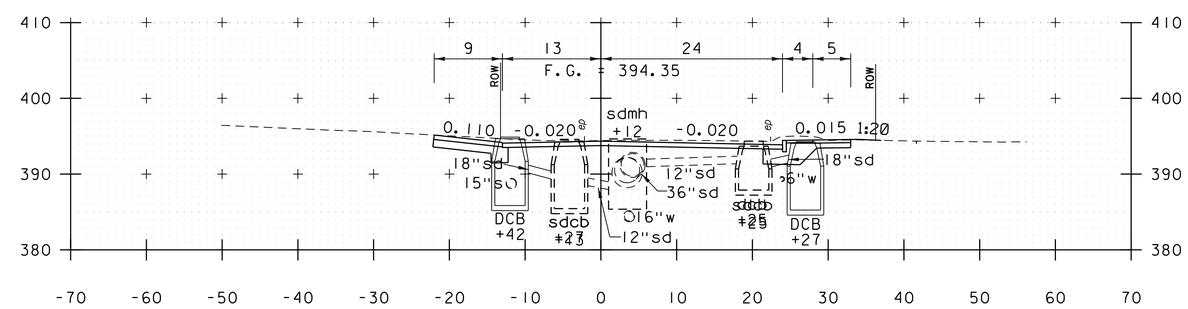

805+00

LOWER NEWTON ROAD

PROJECT NAME: ST. ALBANS	
PROJECT NUMBER: HPP 8000(17)	
FILE NAME: 57414_XS_LowerNewton.dgn	PLOT DATE: 3/4/2016
PROJECT LEADER: J.D. SALADINO	DRAWN BY: O.M. DARISSE
DESIGNED BY: D.M. PECK	CHECKED BY: M.J. SERVETAS
LOWER NEWTON ROAD CROSS SECTIONS	SHEET 202 OF 230

vhb

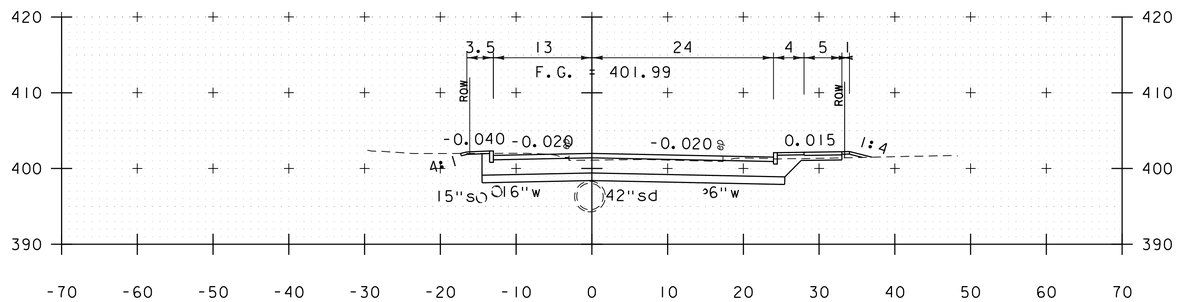

806+50

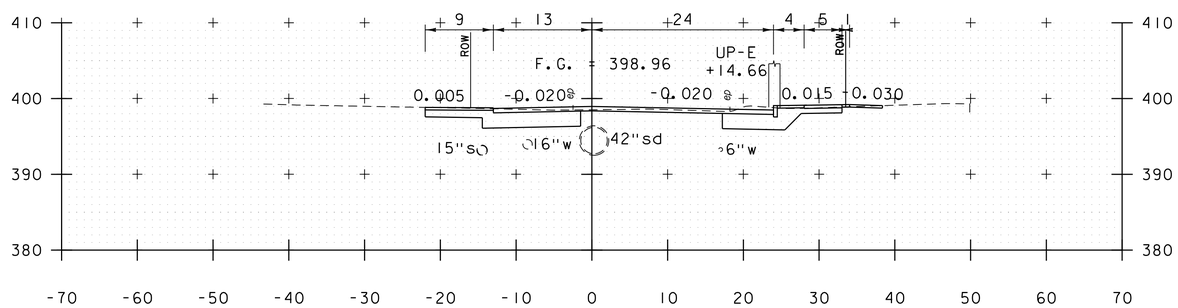

806+00

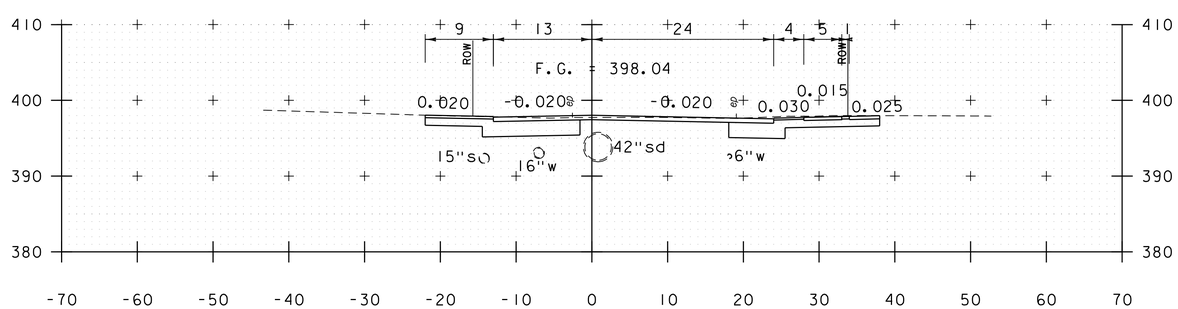

805+83

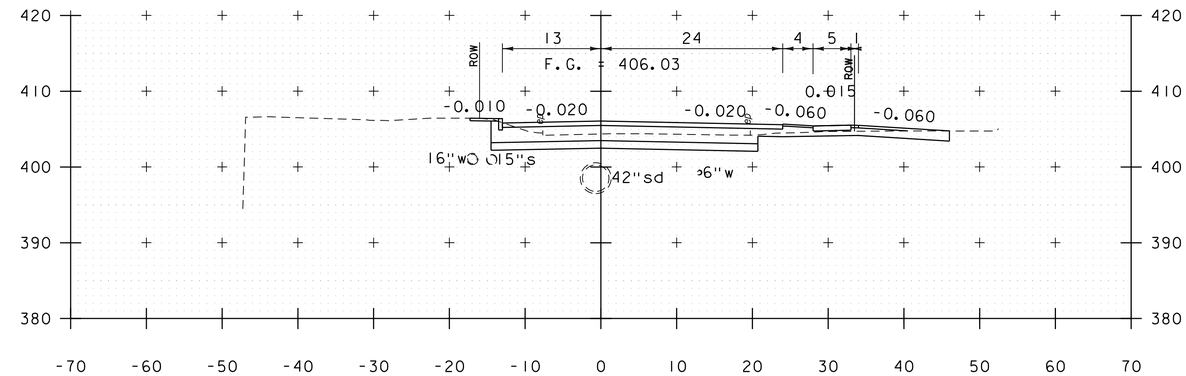

807+07

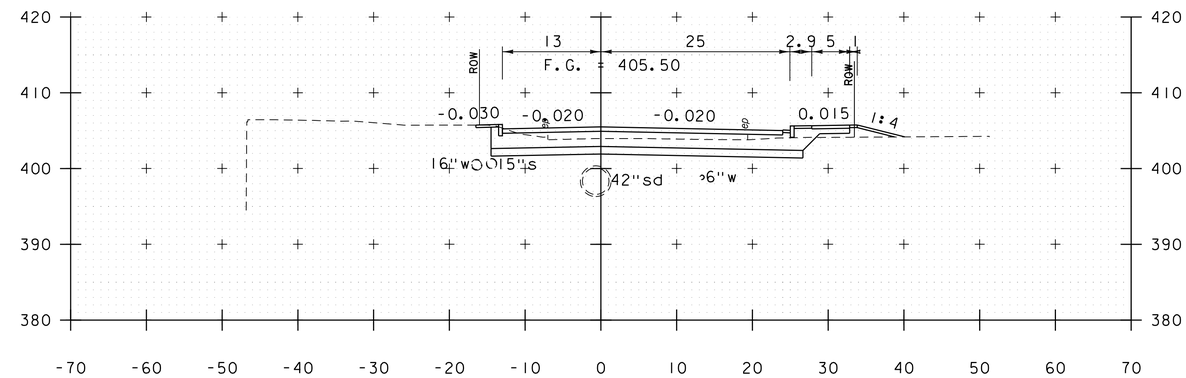

807+00

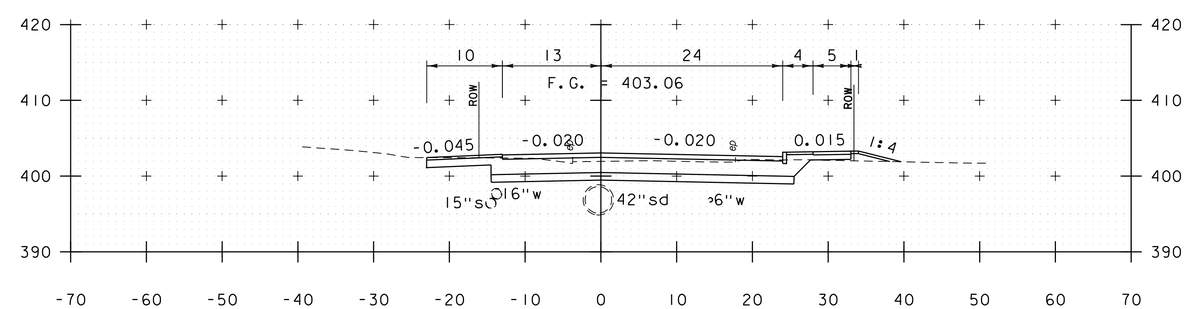

806+66

LOWER NEWTON ROAD

PROJECT NAME: ST. ALBANS	
PROJECT NUMBER: HPP 8000(17)	
FILE NAME: 57414_XS_LowerNewton.dgn	PLOT DATE: 3/4/2016
PROJECT LEADER: J.D. SALADINO	DRAWN BY: O.M. DARISSE
DESIGNED BY: D.M. PECK	CHECKED BY: M.J. SERVETAS
LOWER NEWTON ROAD CROSS SECTIONS	SHEET 203 OF 230

VHB 57414.00

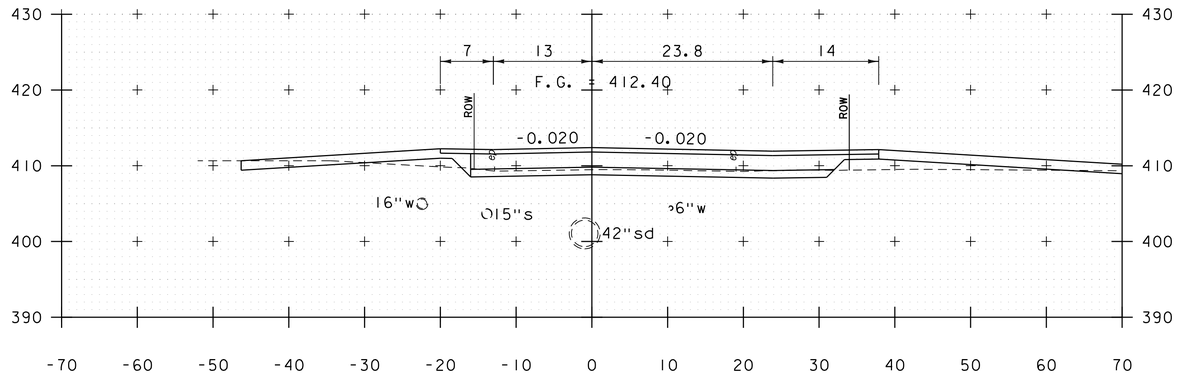

807+83

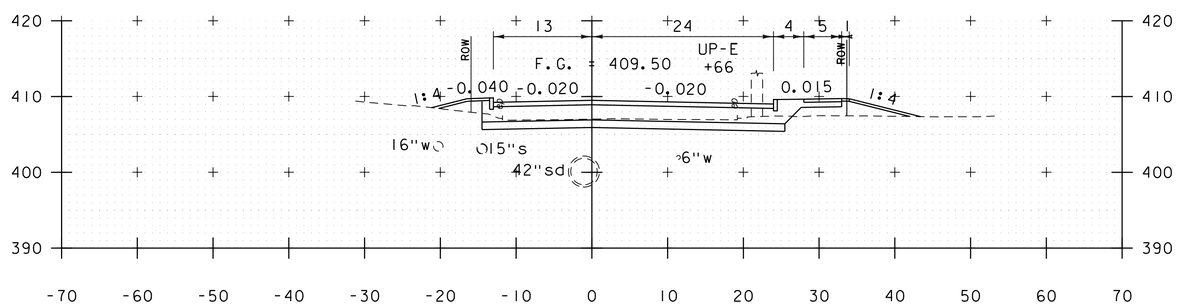

807+50

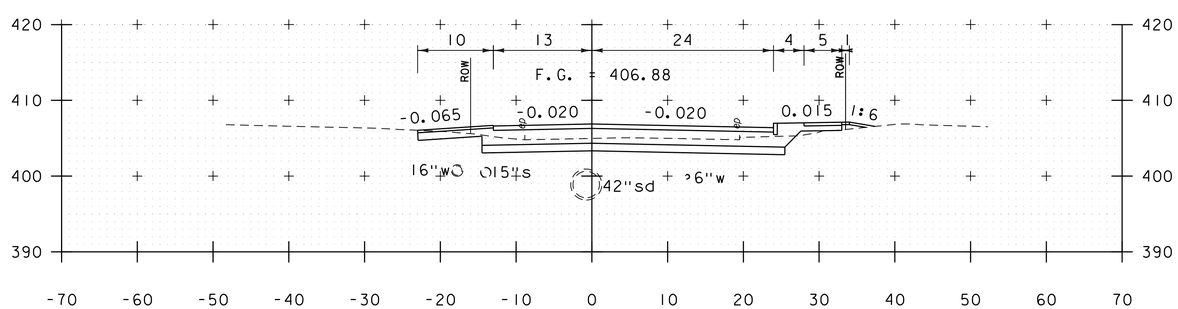

807+18

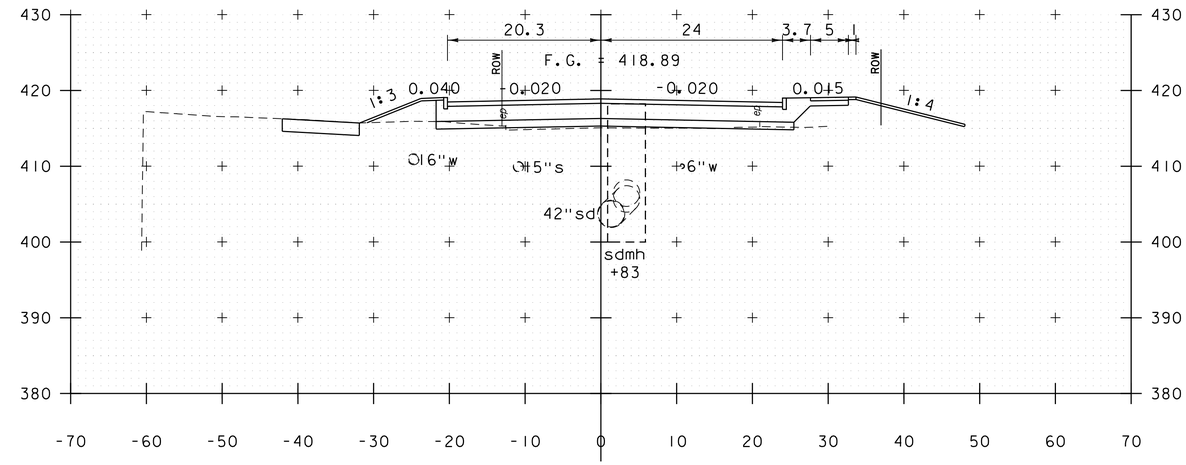

808+50

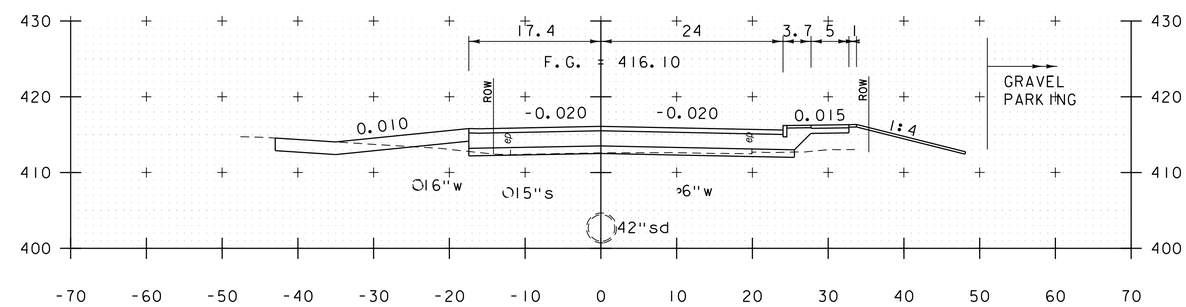

808+22

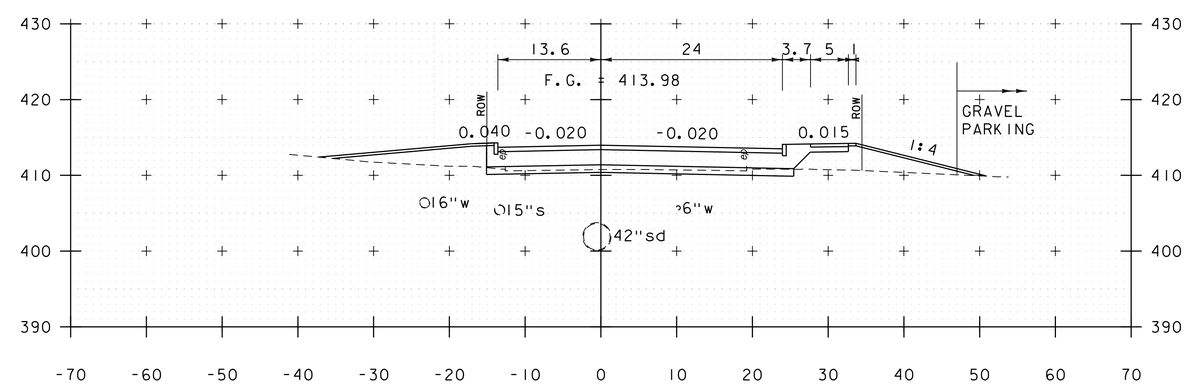

808+00

LOWER NEWTON ROAD

PROJECT NAME:	ST. ALBANS
PROJECT NUMBER:	HPP 8000(17)

FILE NAME: 57414_XS_LowerNewton.dgn	PLOT DATE: 3/4/2016
PROJECT LEADER: J.D. SALADINO	DRAWN BY: O.M. DARISSE
DESIGNED BY: D.M. PECK	CHECKED BY: M.J. SERVETAS
LOWER NEWTON ROAD CROSS SECTIONS	SHEET 204 OF 230

VHB 57414.00

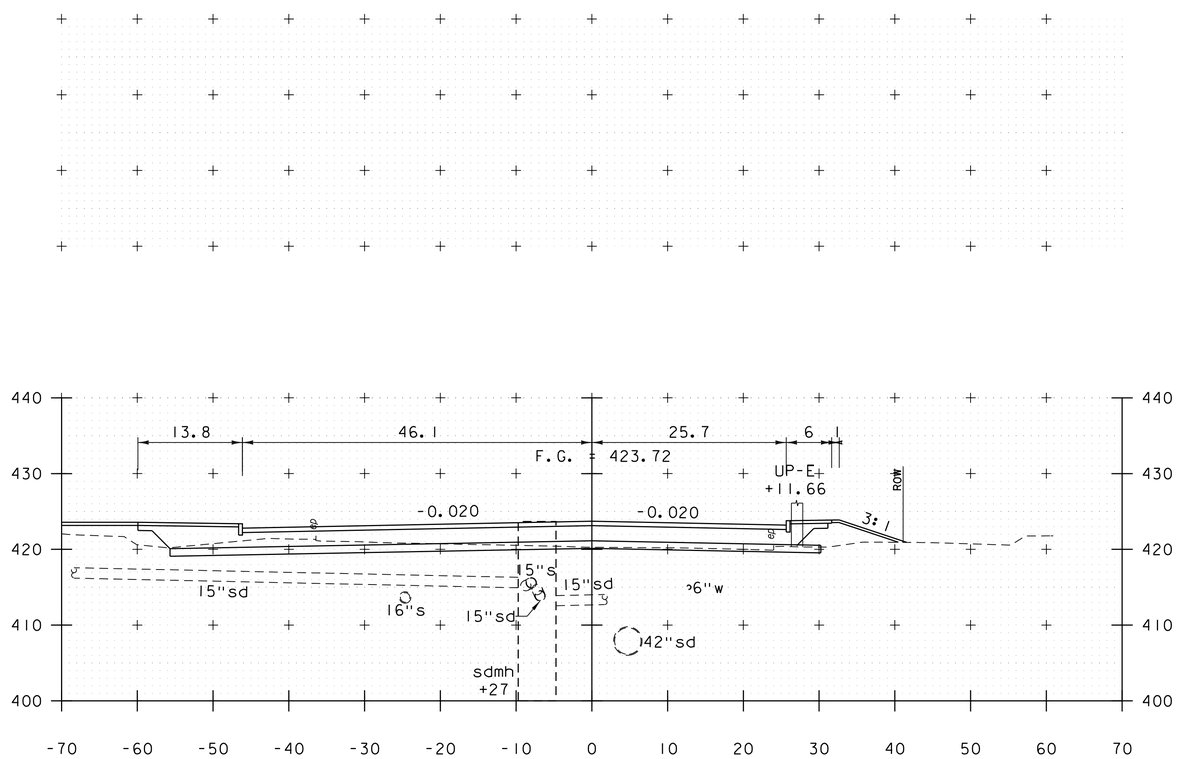

809+00

LOWER NEWTON ROAD

PROJECT NAME: ST. ALBANS	
PROJECT NUMBER: HPP 8000(17)	
FILE NAME: 57414_XS_LowerNewton.dgn	PLOT DATE: 3/4/2016
PROJECT LEADER: J.D. SALADINO	DRAWN BY: O.M. DARISSE
DESIGNED BY: D.M. PECK	CHECKED BY: M.J. SERVETAS
LOWER NEWTON ROAD CROSS SECTIONS	SHEET 205 OF 230

vhb

STA. 899+45, LT
BEGIN 30:1 LANE TAPER

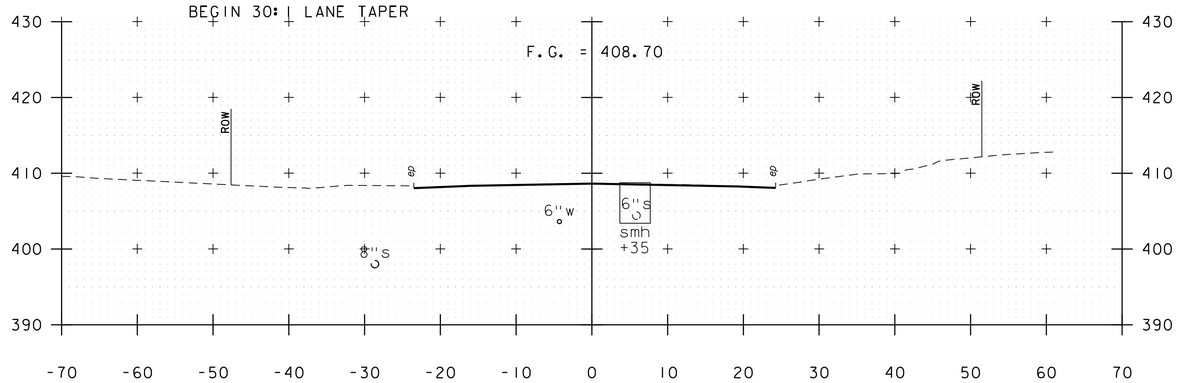

STATION 899+00
BEGIN APPROACH

899+00

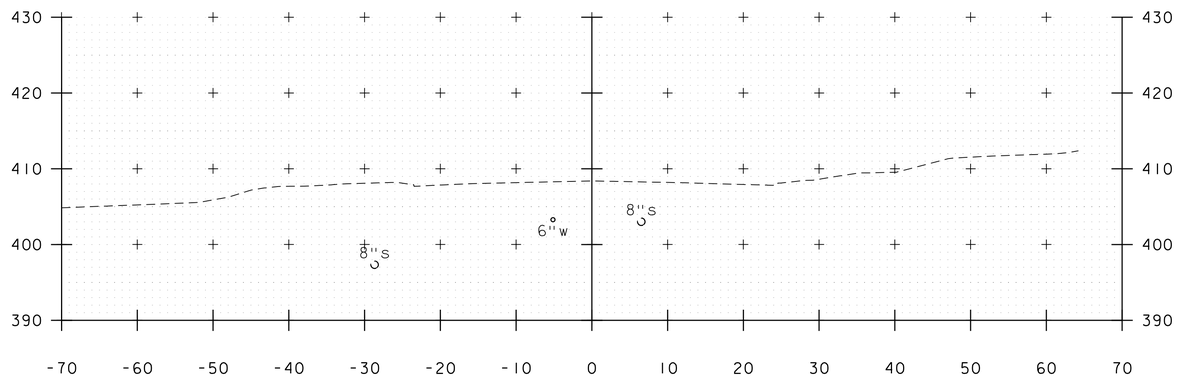

898+50

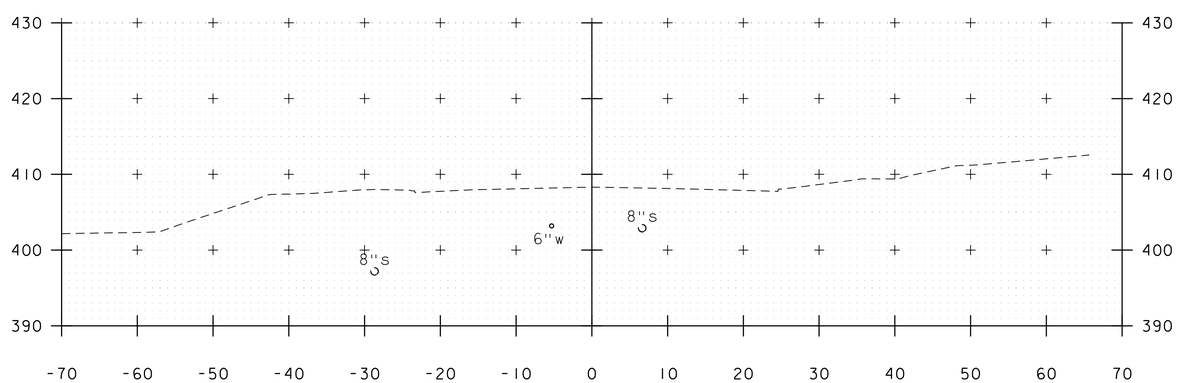

898+39

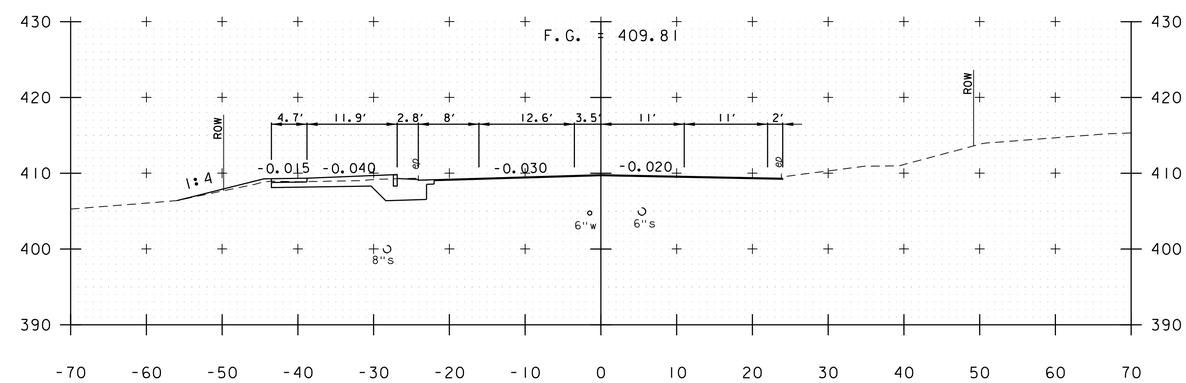

900+50

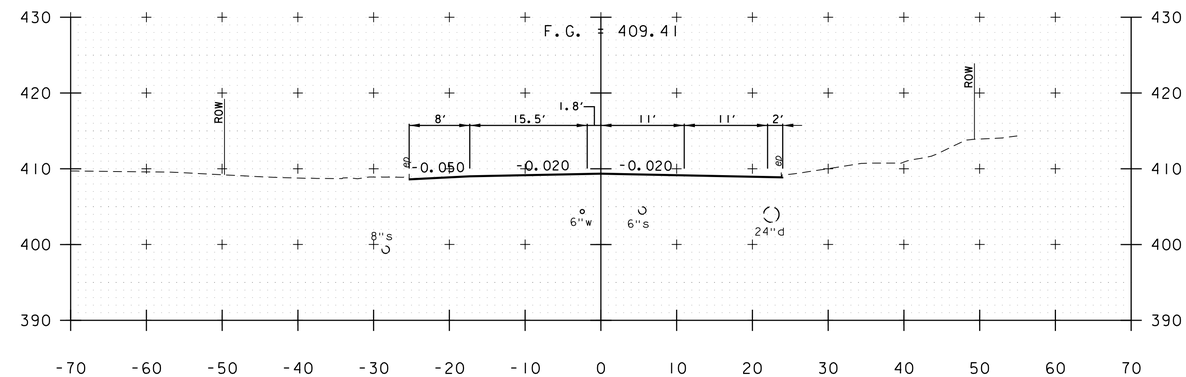

900+00

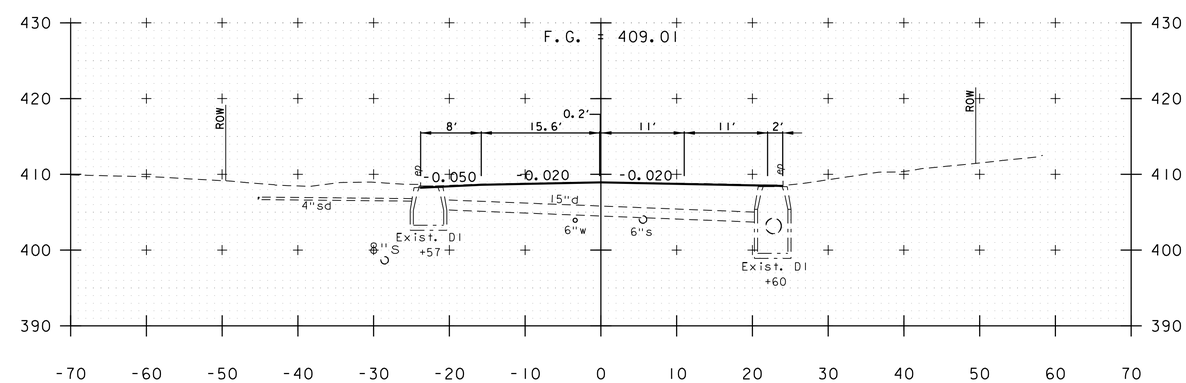

899+50

S. MAIN STREET (SHEET 1 OF 3)

PROJECT NAME: ST. ALBANS	
PROJECT NUMBER: HPP 8000(17)	
FILE NAME: 57414_XS_SouthMain.dgn	PLOT DATE: 3/4/2016
PROJECT LEADER: M.A. COLGAN	DRAWN BY: K.C. BARRY
DESIGNED BY: D.M. PECK	CHECKED BY: M.J. SERVETAS
CROSS SECTIONS	SHEET 206 OF 230

VHB 57414.00

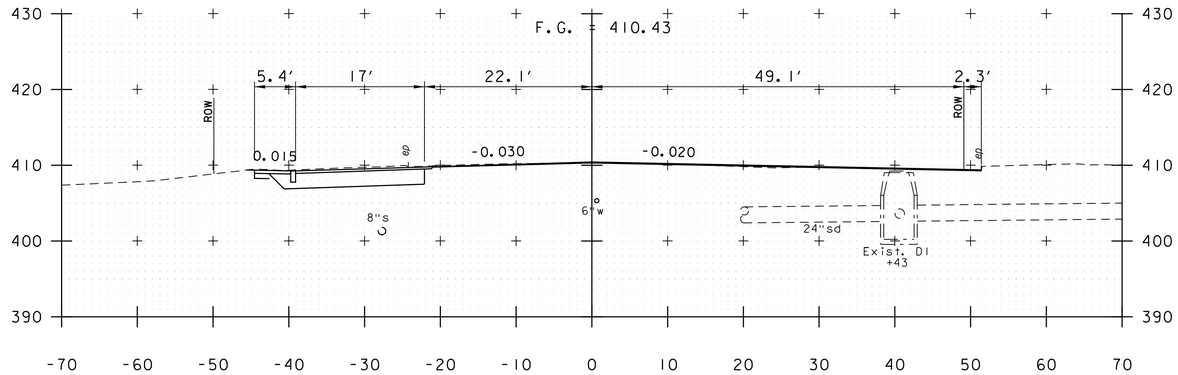

STA. 901+25, LT
END 30:1 LANE TAPER

901+50

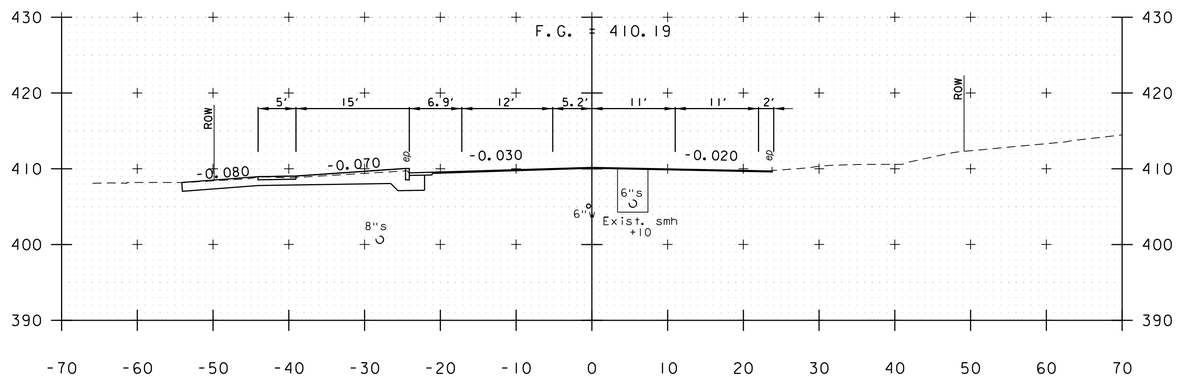

901+00

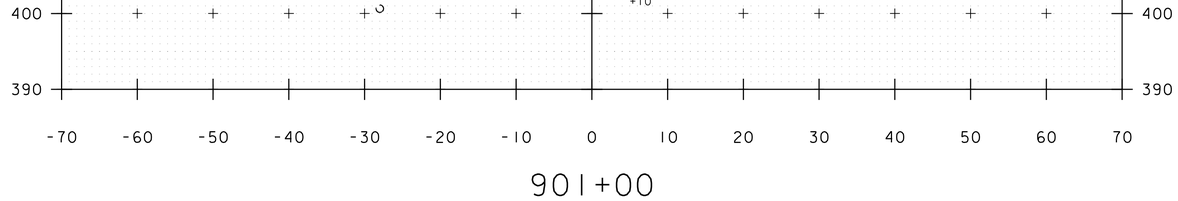

900+61

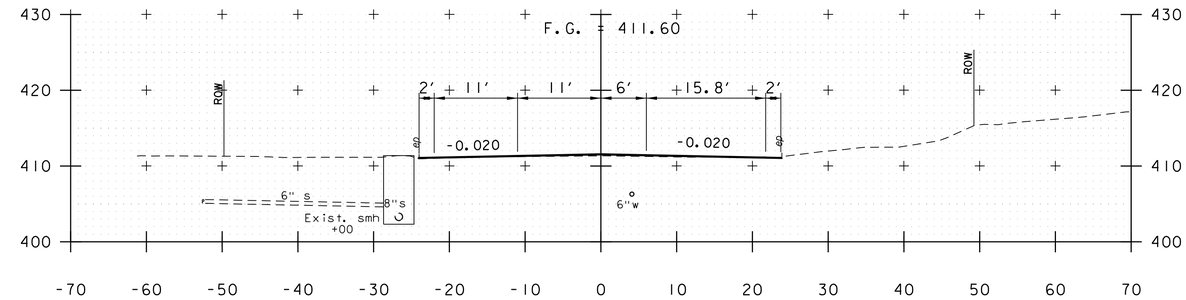

903+00

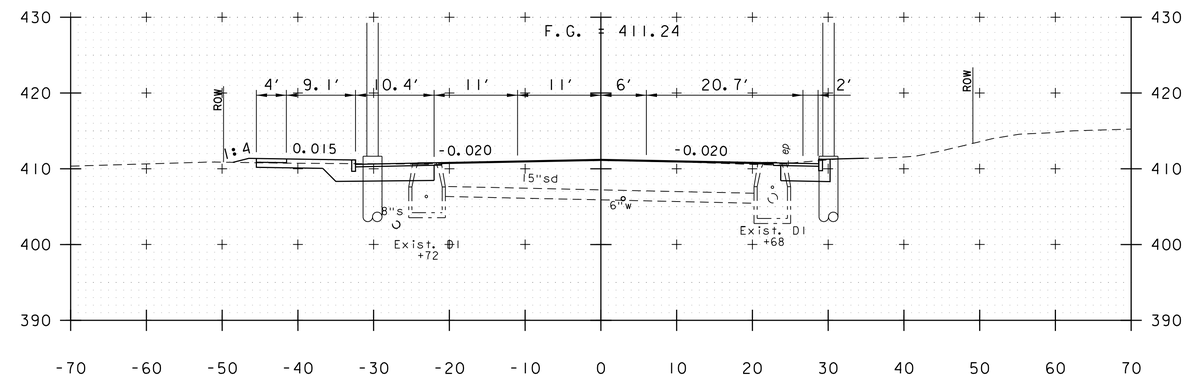

902+50

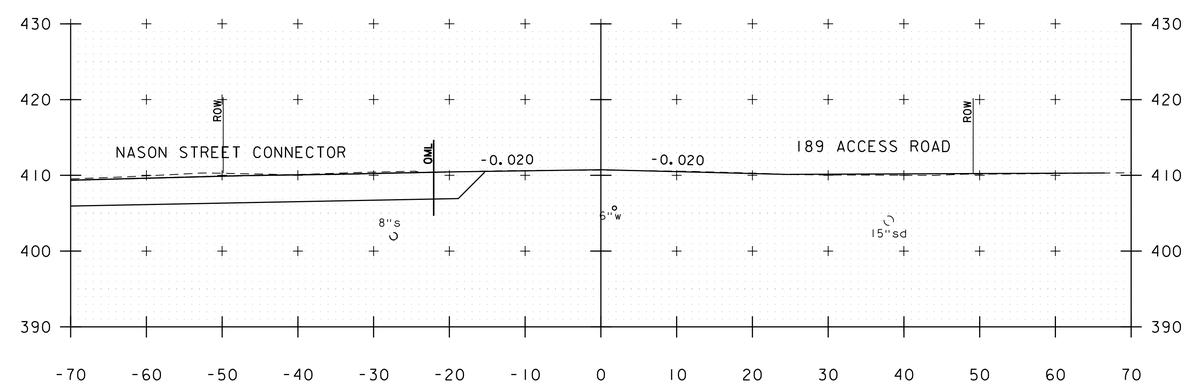

SEE NASON STREET CONNECTOR
CROSS SECTIONS

902+00

S. MAIN STREET (SHEET 2 OF 3)

PROJECT NAME: ST. ALBANS	
PROJECT NUMBER: HPP 8000(17)	
FILE NAME: 57414_XS_SouthMain.dgn	PLOT DATE: 3/4/2016
PROJECT LEADER: M.A. COLGAN	DRAWN BY: K.C. BARRY
DESIGNED BY: D.M. PECK	CHECKED BY: M.J. SERVETAS
CROSS SECTIONS	SHEET 207 OF 230

VHB 57414.00

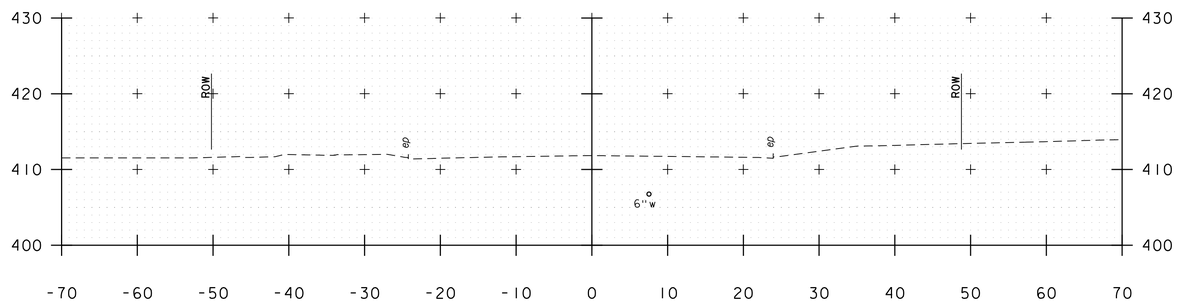

904+50

STATION 904+25
END APPROACH

STA. 904+19, RT
END 10:1 LANE TAPER

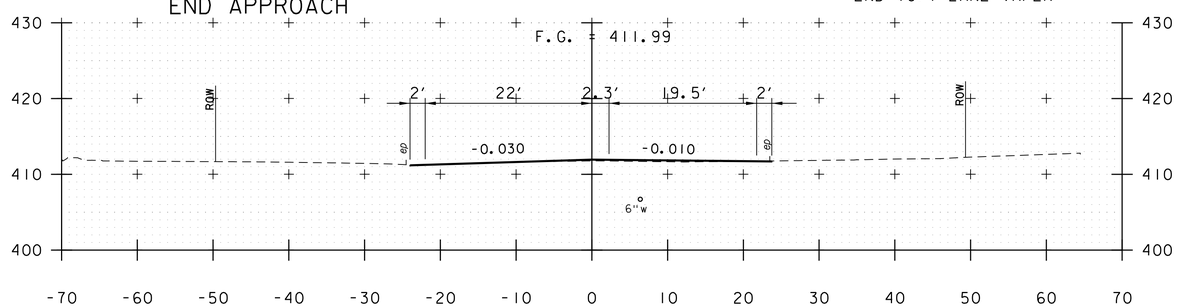

904+00

STA. 903+62, RT
BEGIN 10:1 LANE TAPER

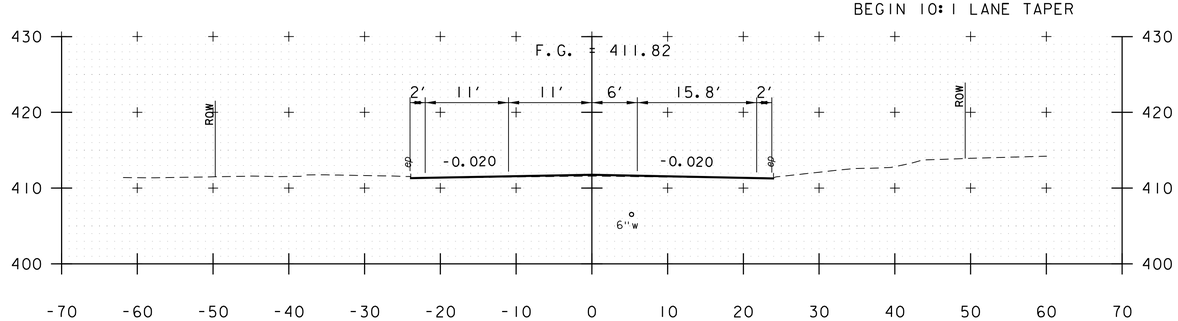

903+50

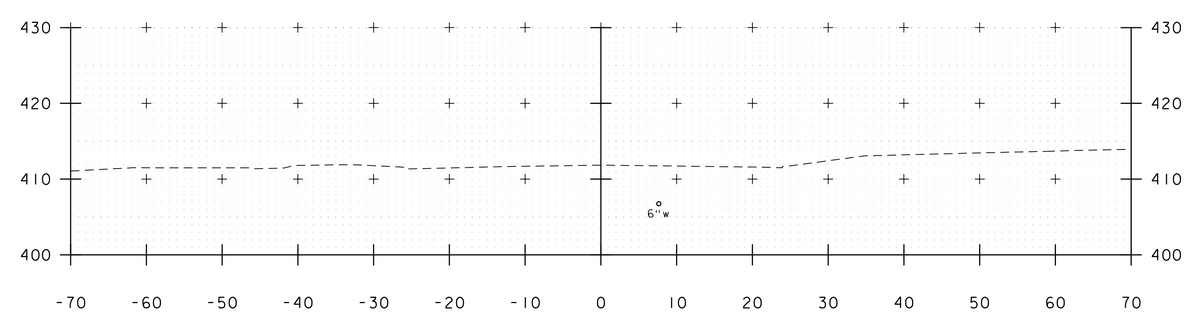

904+54

S. MAIN STREET (SHEET 3 OF 3)

PROJECT NAME: ST. ALBANS	
PROJECT NUMBER: HPP 8000(17)	
FILE NAME: 57414_XS_SouthMain.dgn	PLOT DATE: 3/4/2016
PROJECT LEADER: M.A. COLGAN	DRAWN BY: K.C. BARRY
DESIGNED BY: D.M. PECK	CHECKED BY: M.J. SERVETAS
CROSS SECTIONS	SHEET 208 OF 230

VHB 57414.00

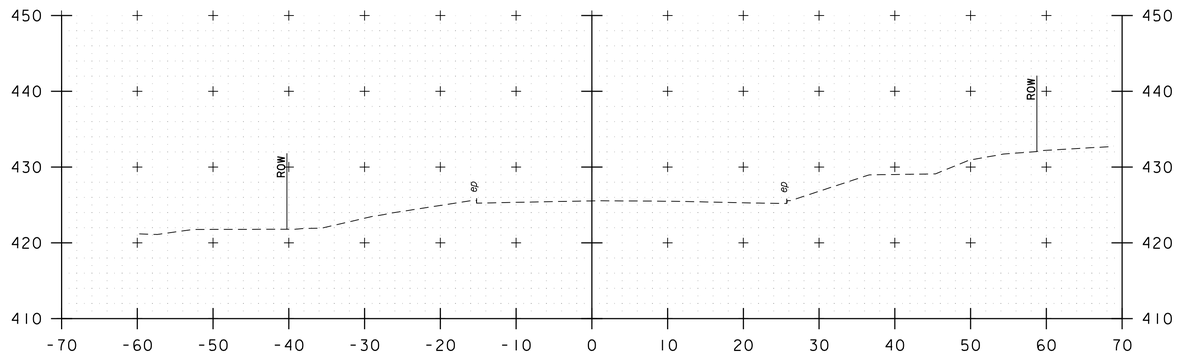

1001+50

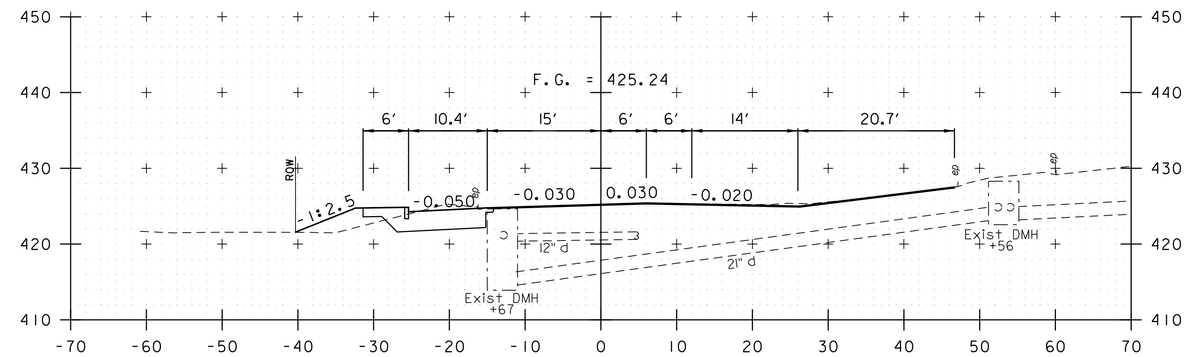

1002+50

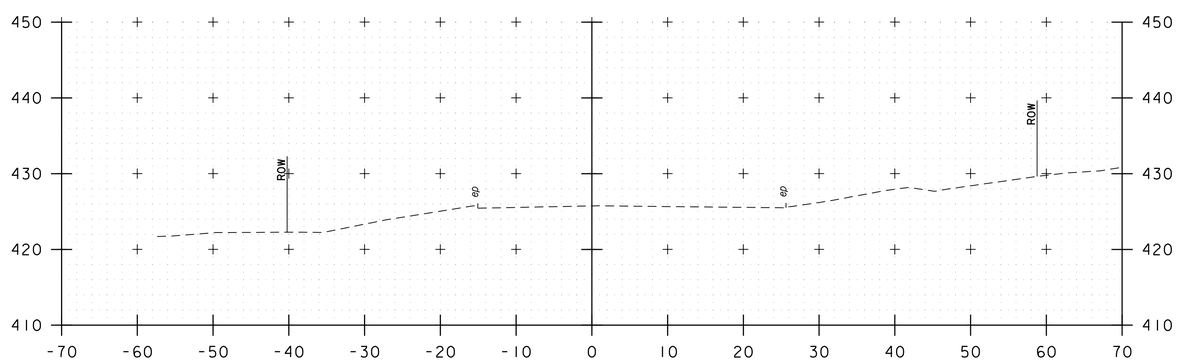

1001+00

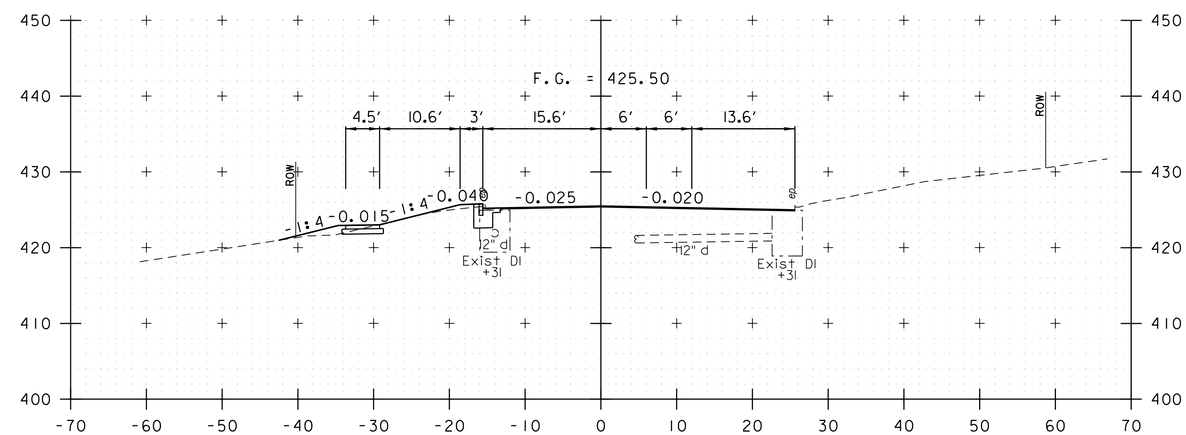

1002+00

STATION 1001+80
BEGIN APPROACH

NORTH MAIN STREET (US 7)

PROJECT NAME: ST. ALBANS	
PROJECT NUMBER: HPP 8000(17)	
FILE NAME: 57414_XS.dgn	PLOT DATE: 3/4/2016
PROJECT LEADER: J. D. SALADINO	DRAWN BY: DMP / WAD
DESIGNED BY: D.M. PECK	CHECKED BY: M.J. SERVETAS
CROSS SECTIONS	SHEET 209 OF 230

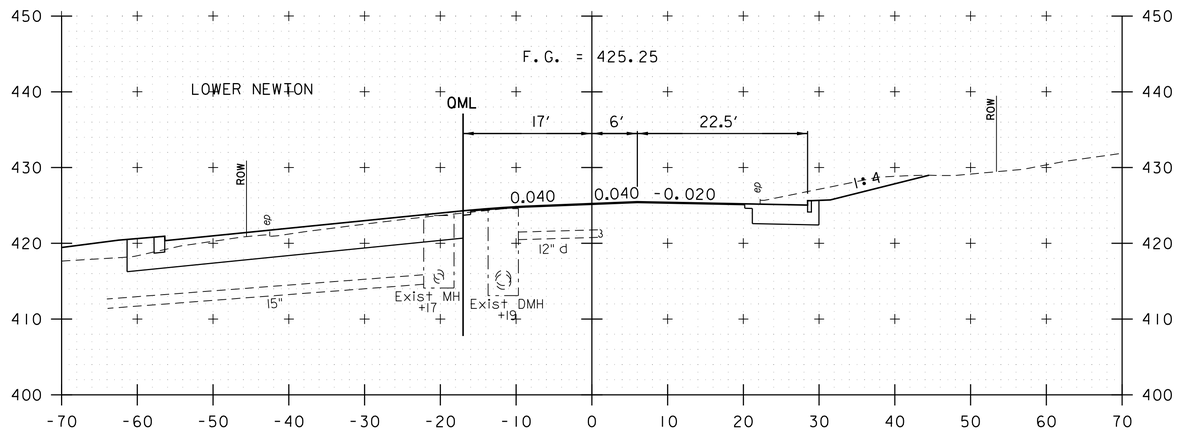

1003+50

STATION 1004+65
END APPROACH

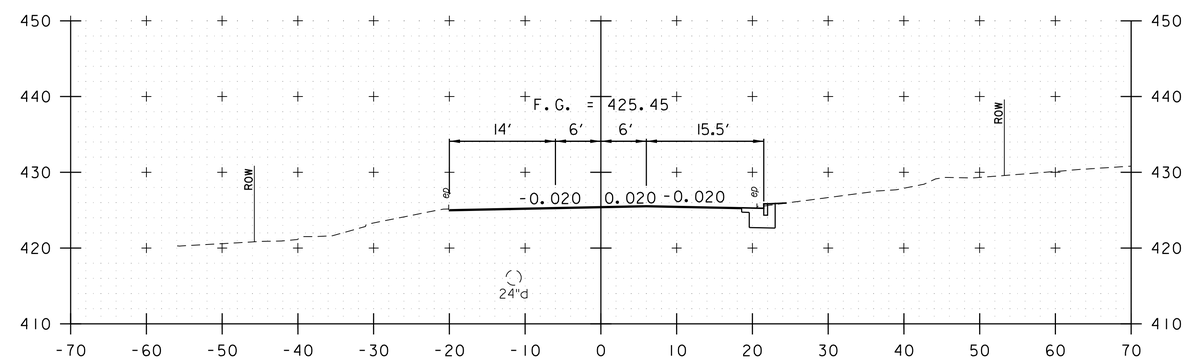

1004+50

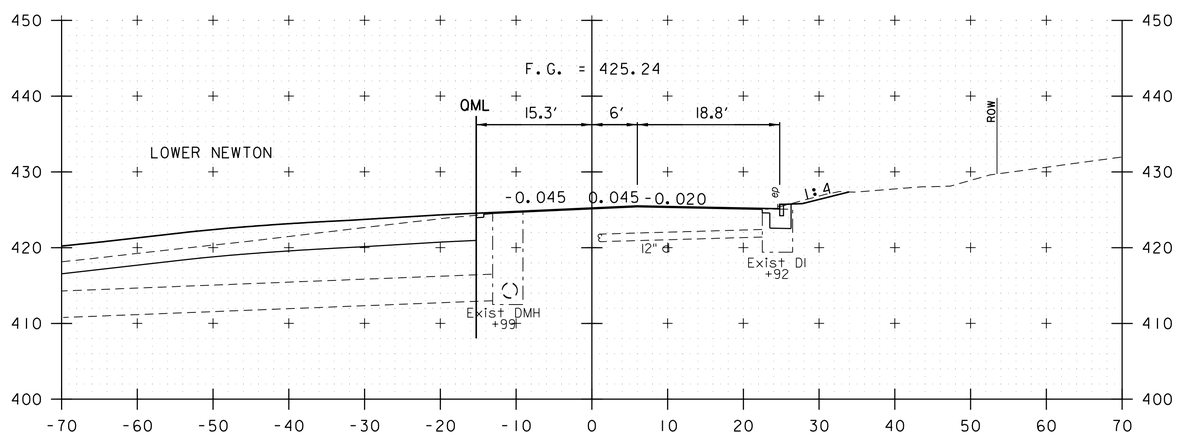

1003+00

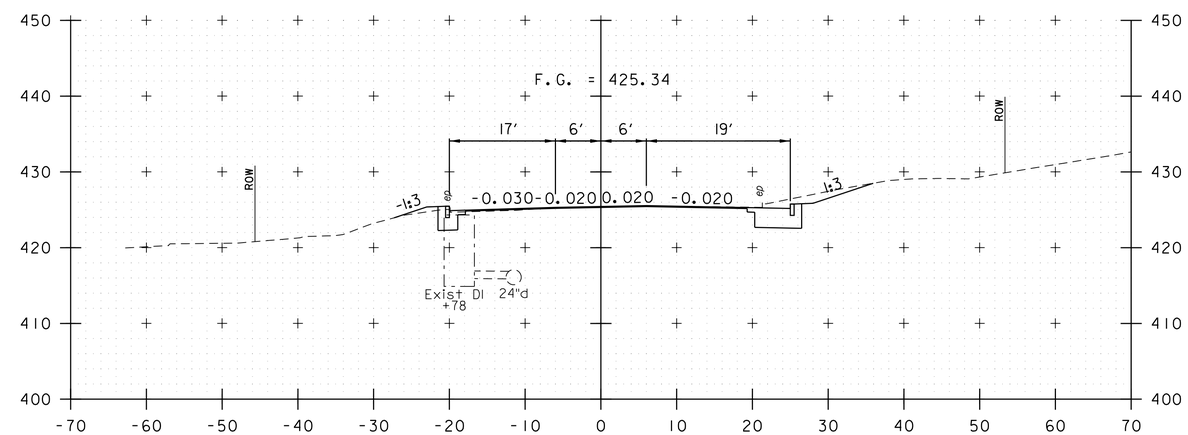

1004+00

NORTH MAIN STREET (US 7)

PROJECT NAME: ST. ALBANS	
PROJECT NUMBER: HPP 8000(17)	
FILE NAME: 57414_XS.dgn	PLOT DATE: 3/4/2016
PROJECT LEADER: J. D. SALADINO	DRAWN BY: DMP / WAD
DESIGNED BY: D.M. PECK	CHECKED BY: M.J. SERVETAS
CROSS SECTIONS	SHEET 210 OF 230

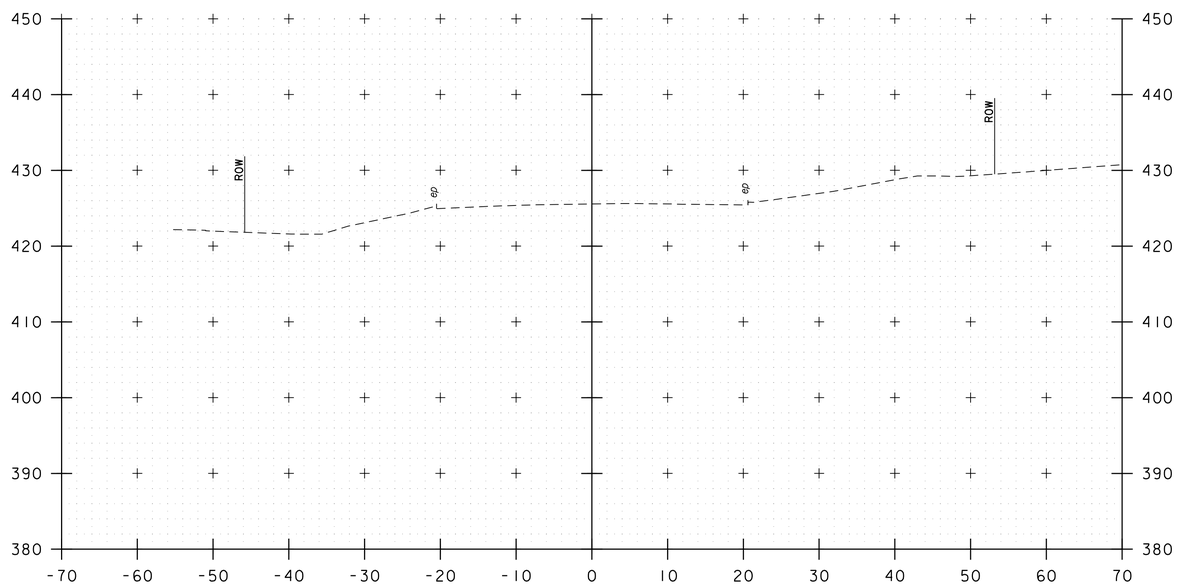

1005+00

NORTH MAIN STREET (US 7)

PROJECT NAME: ST. ALBANS	
PROJECT NUMBER: HPP 8000(17)	
FILE NAME: 57414_XS.dgn	PLOT DATE: 3/4/2016
PROJECT LEADER: J. D. SALADINO	DRAWN BY: DMP / WAD
DESIGNED BY: D.M. PECK	CHECKED BY: M.J. SERVETAS
CROSS SECTIONS	SHEET 211 OF 230

VHB 57414.00

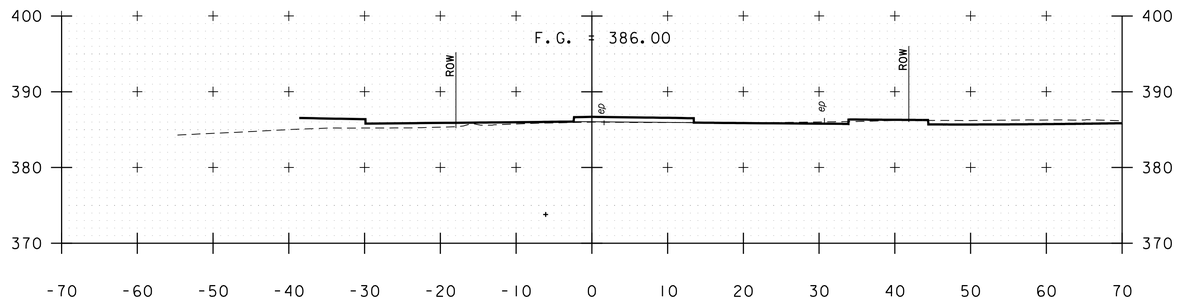

2003+00

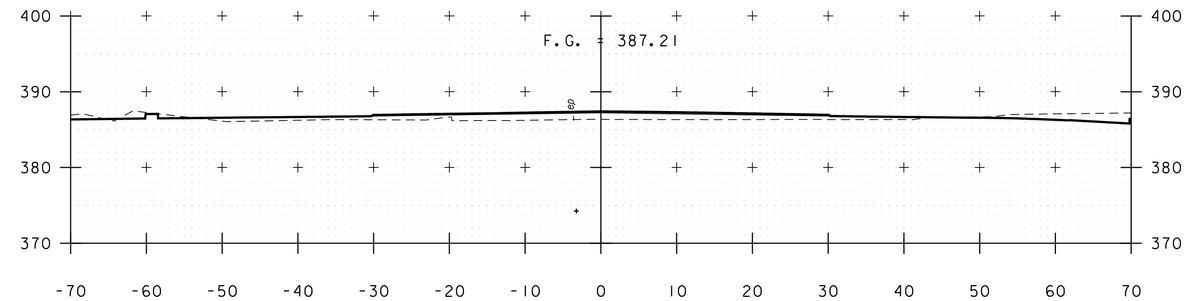

2003+75

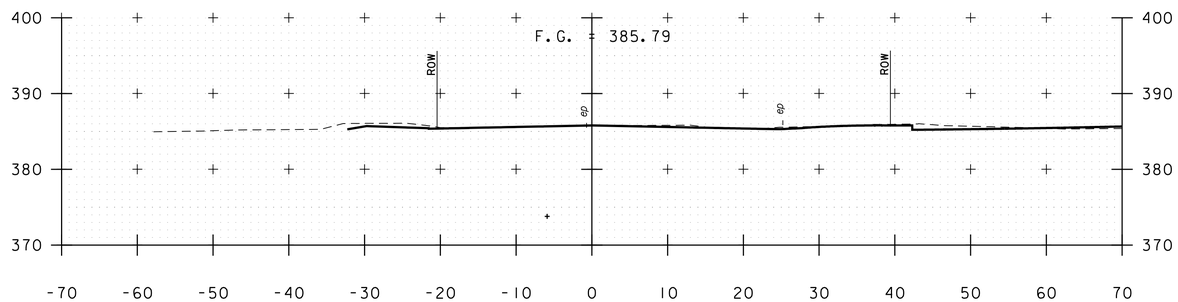

2002+75

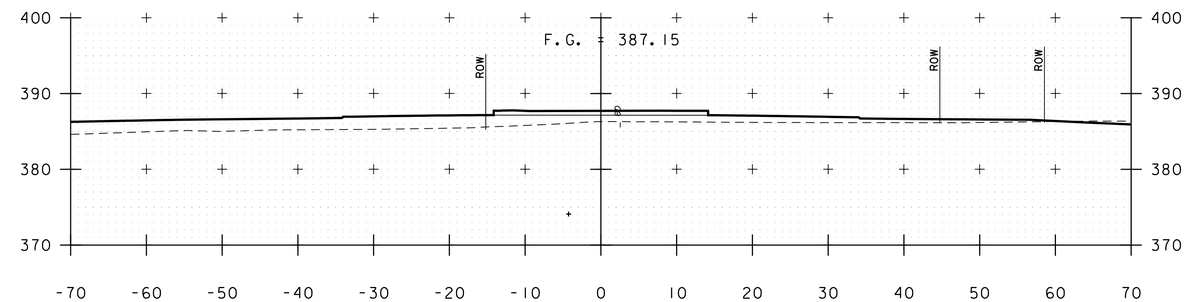

2003+50

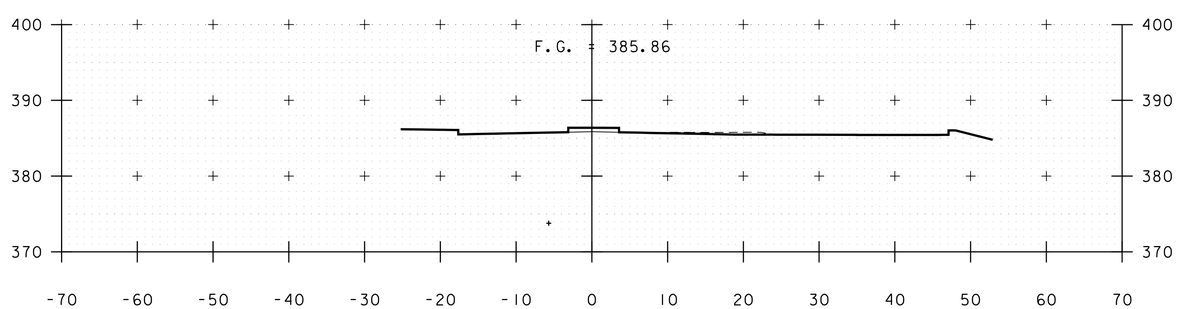

2002+50

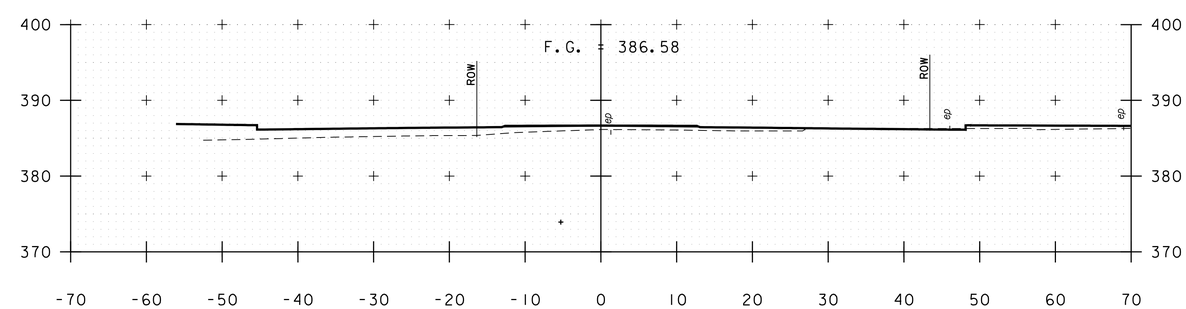

2003+25

LOWER WELDEN STREET

PROJECT NAME: ST. ALBANS	
PROJECT NUMBER: HPP 8000(17)	
FILE NAME: 57414_XS_LowerWelden.dgn	PLOT DATE: 3/4/2016
PROJECT LEADER: M.A. COLGAN	DRAWN BY: D.M. PECK
DESIGNED BY: D.M. PECK	CHECKED BY: ------
CROSS SECTIONS	SHEET 212 OF 230

VHB 57414.00

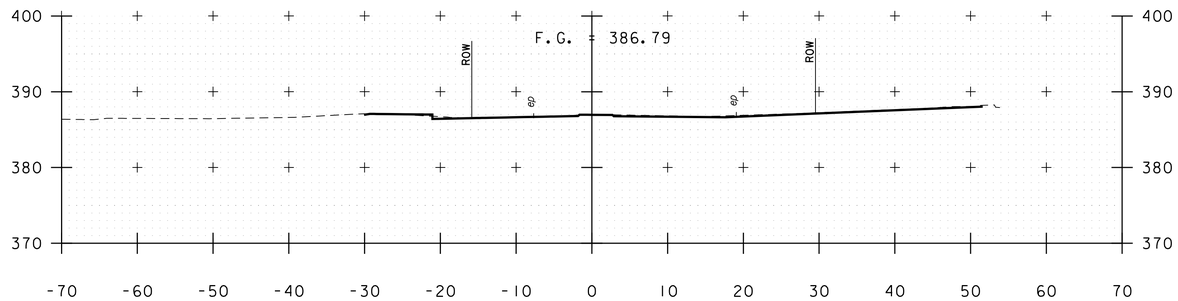

2004+50

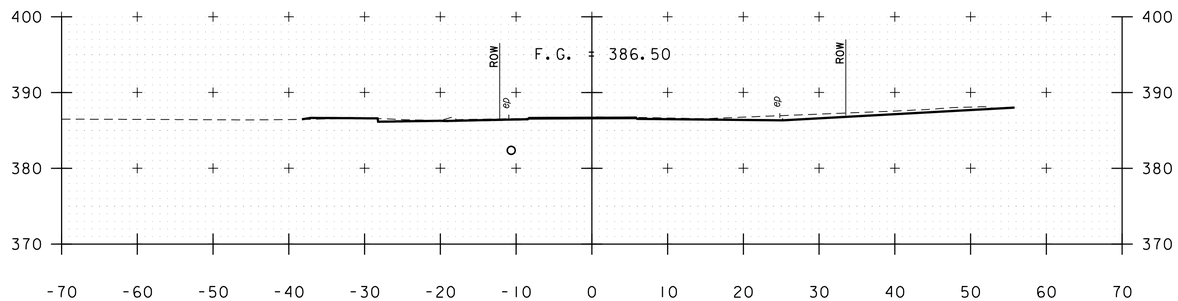

2004+25

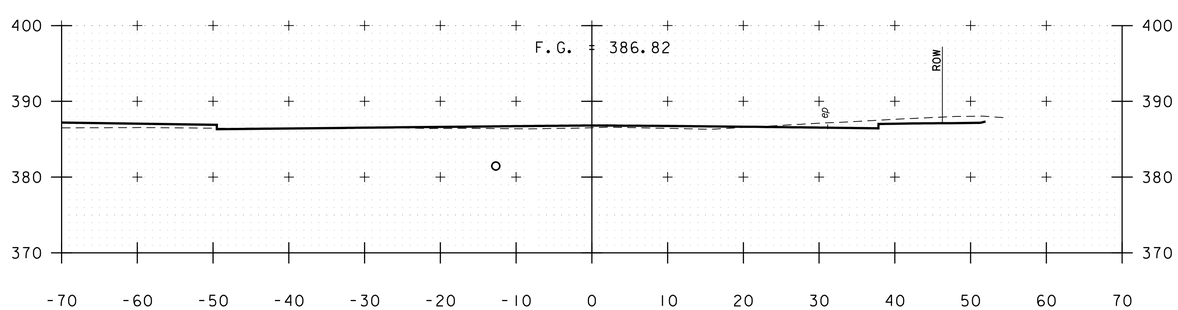

2004+00

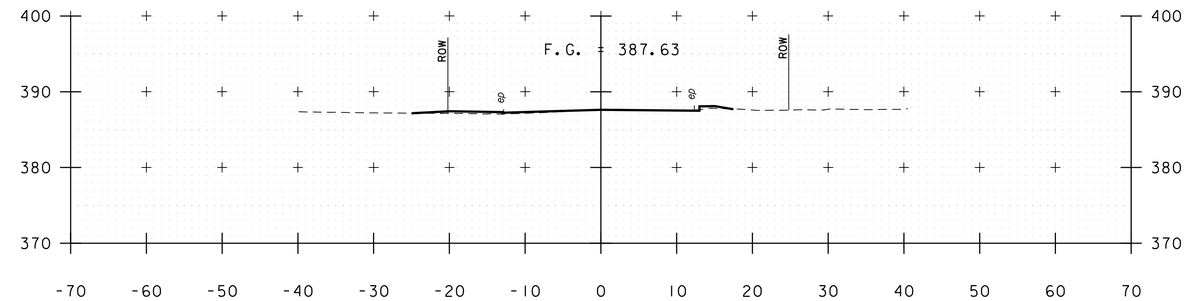

2005+25

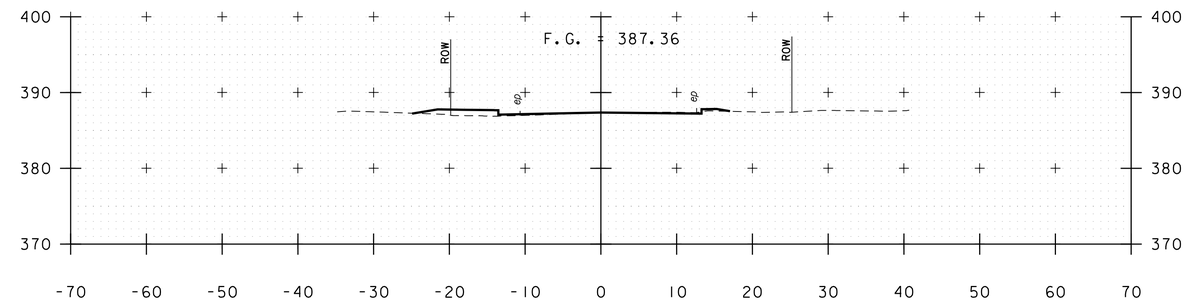

2005+00

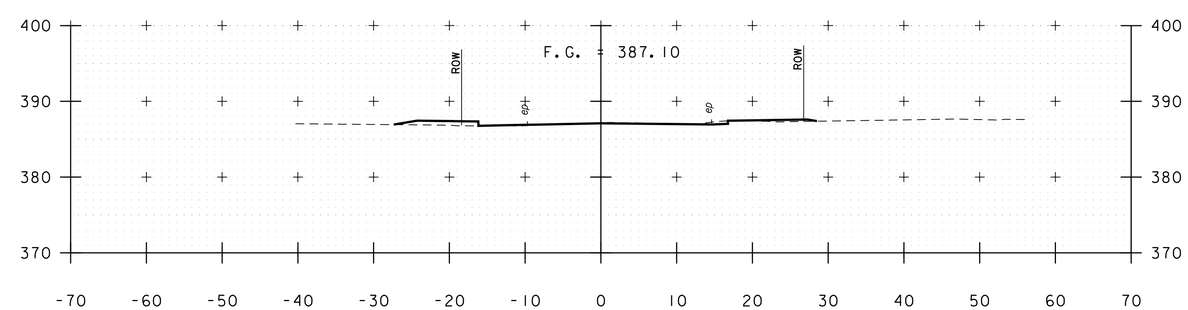

2004+75

LOWER WELDEN STREET

PROJECT NAME: ST. ALBANS	
PROJECT NUMBER: HPP 8000(17)	
FILE NAME: 57414_XS_LowerWelden.dgn	PLOT DATE: 3/4/2016
PROJECT LEADER: M.A. COLGAN	DRAWN BY: D.M. PECK
DESIGNED BY: D.M. PECK	CHECKED BY: ------
CROSS SECTIONS	SHEET 213 OF 230

VHB 57414.00

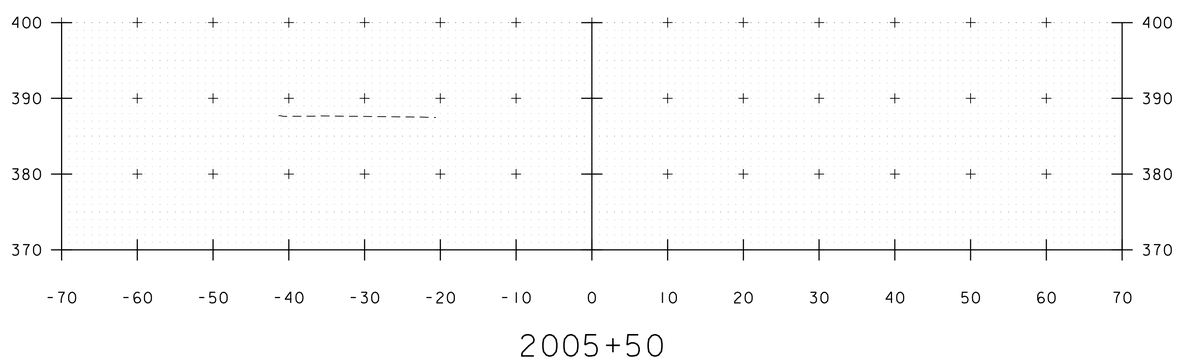

LOWER WELDEN STREET

PROJECT NAME: ST. ALBANS	
PROJECT NUMBER: HPP 8000(17)	
FILE NAME: 57414_XS_LowerWelden.dgn	PLOT DATE: 3/4/2016
PROJECT LEADER: M.A. COLGAN	DRAWN BY: D.M. PECK
DESIGNED BY: D.M. PECK	CHECKED BY: ------
CROSS SECTIONS	SHEET 214 OF 230

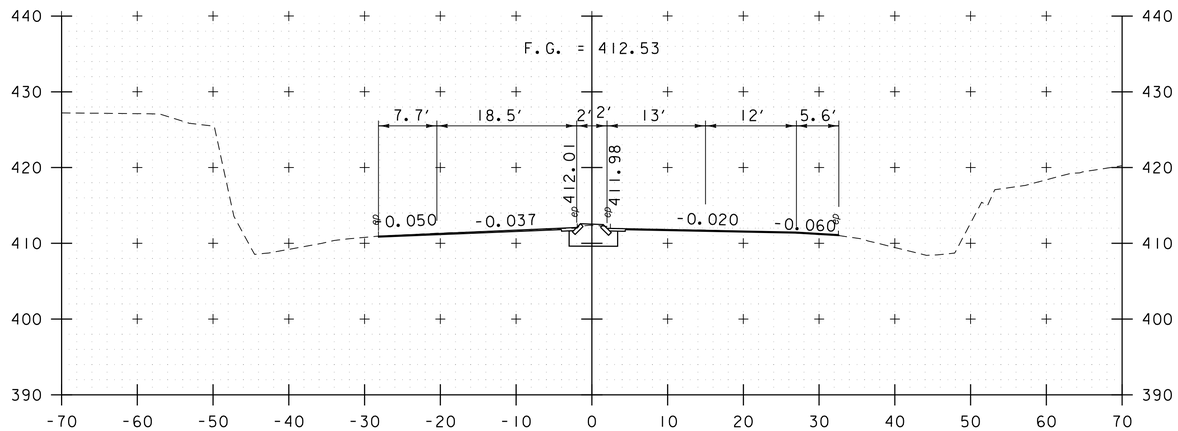

STATION 3000+50
BEGIN APPROACH

3000+50

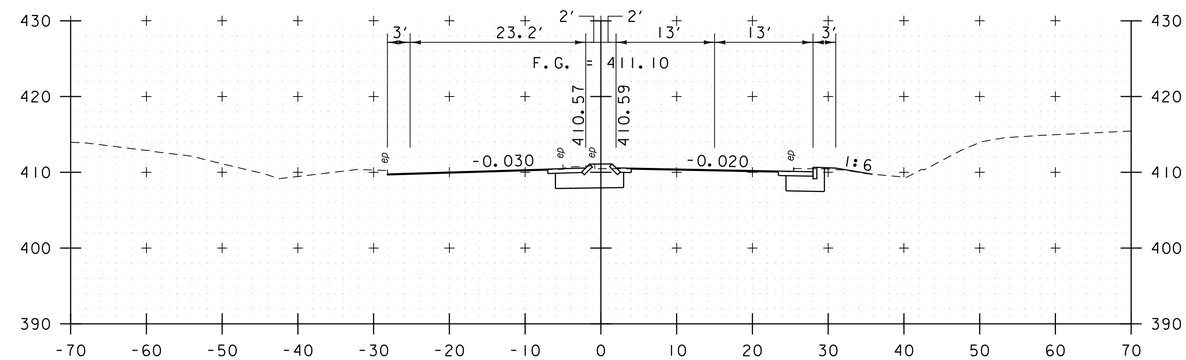

3001+50

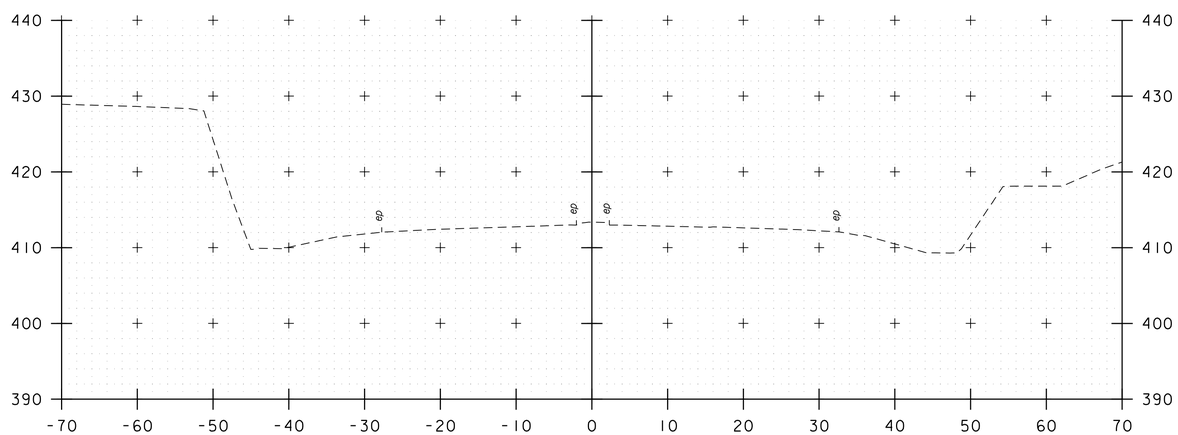

3000+00

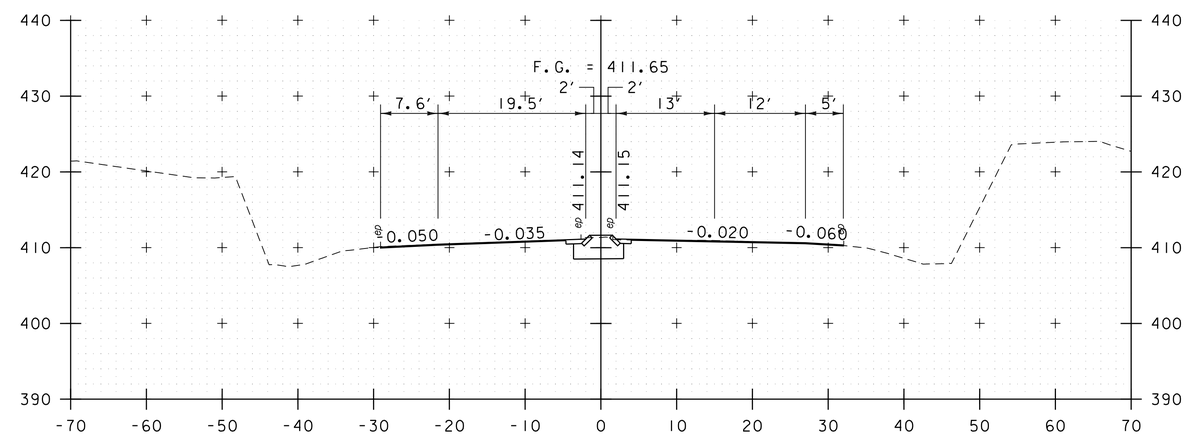

3001+00

I-89 ACCESS ROAD

PROJECT NAME: ST. ALBANS	
PROJECT NUMBER: HPP 8000(17)	
FILE NAME: 57414_XS_I89Access.dgn	PLOT DATE: 3/4/2016
PROJECT LEADER: J. D. SALADINO	DRAWN BY: DMP / WAD
DESIGNED BY: D.M. PECK	CHECKED BY: M.J. SERVETAS
CROSS SECTIONS	SHEET 215 OF 230

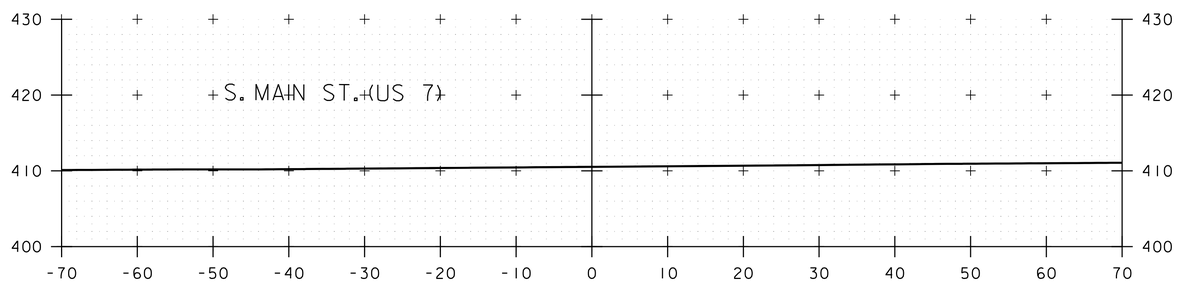

3002+19

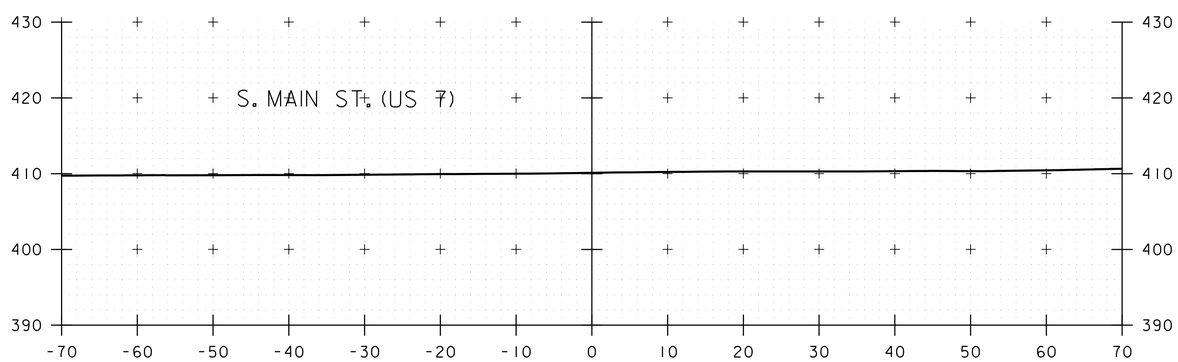

3002+00

I-89 ACCESS ROAD

PROJECT NAME: ST. ALBANS	
PROJECT NUMBER: HPP 8000(17)	
FILE NAME: 57414_XS_189Access.dgn	PLOT DATE: 3/4/2016
PROJECT LEADER: J. D. SALADINO	DRAWN BY: DMP / WAD
DESIGNED BY: D.M. PECK	CHECKED BY: M.J. SERVETAS
CROSS SECTIONS	SHEET 216 OF 230

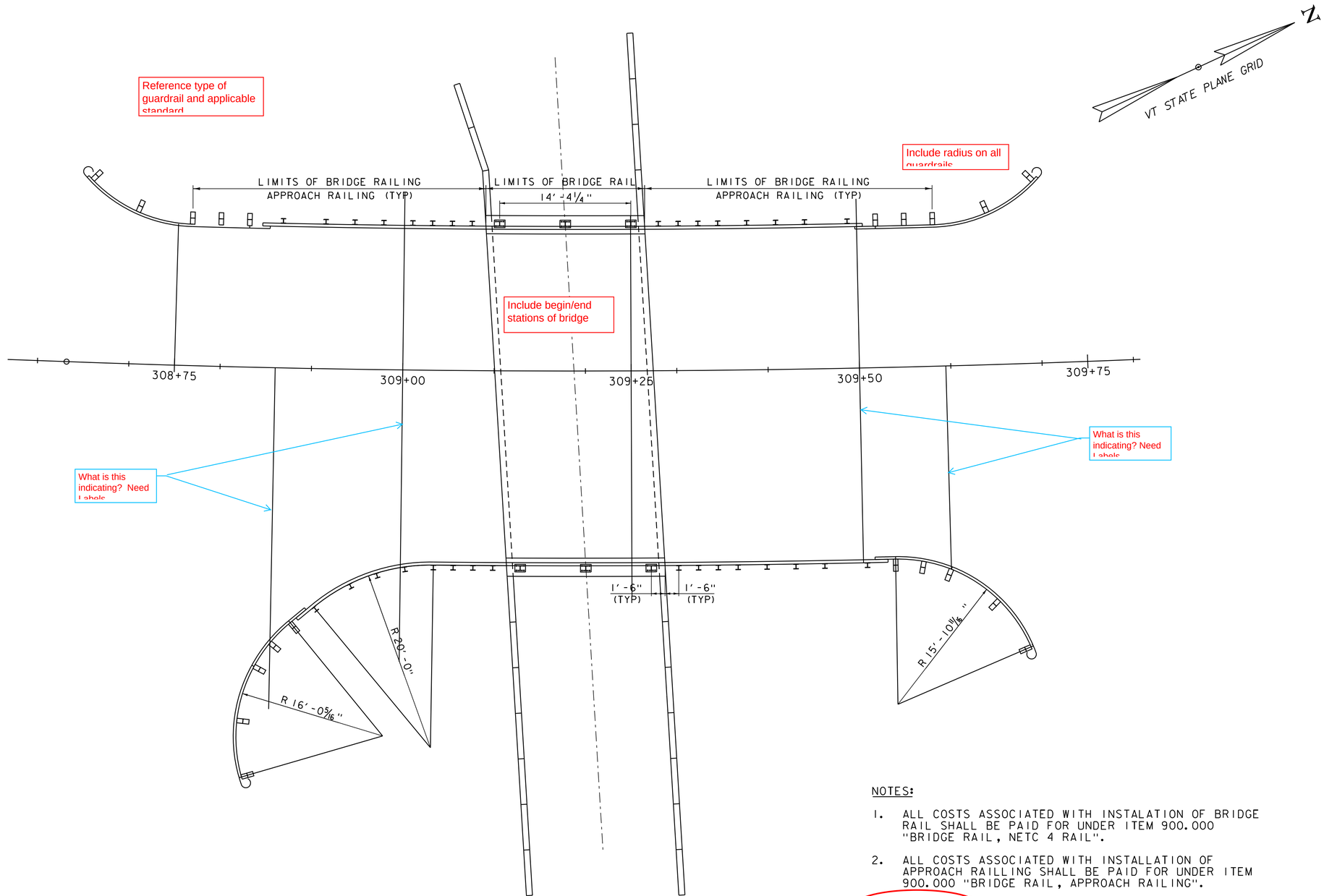

BRIDGE AND APPROACH RAIL

SCALE: 3/8" = 1'-0"

NOTES:

1. ALL COSTS ASSOCIATED WITH INSTALATION OF BRIDGE RAIL SHALL BE PAID FOR UNDER ITEM 900.000 "BRIDGE RAIL, NETC 4 RAIL".
2. ALL COSTS ASSOCIATED WITH INSTALLATION OF APPROACH RAILLING SHALL BE PAID FOR UNDER ITEM 900.000 "BRIDGE RAIL, APPROACH RAILING".
3. NOTE 3

PROJECT NAME: ST. ALBANS	
PROJECT NUMBER: HP 8000(17)	
FILE NAME: 57414_bdr_brail.dgn	PLOT DATE: 3/4/2016
PROJECT LEADER: M.A. COLGAN	DRAWN BY: C.J. HAKEY
DESIGNED BY: S.G. FARNSWORTH	CHECKED BY: ------
BRIDGE AND APPROACH RAIL	SHEET 217 OF 230

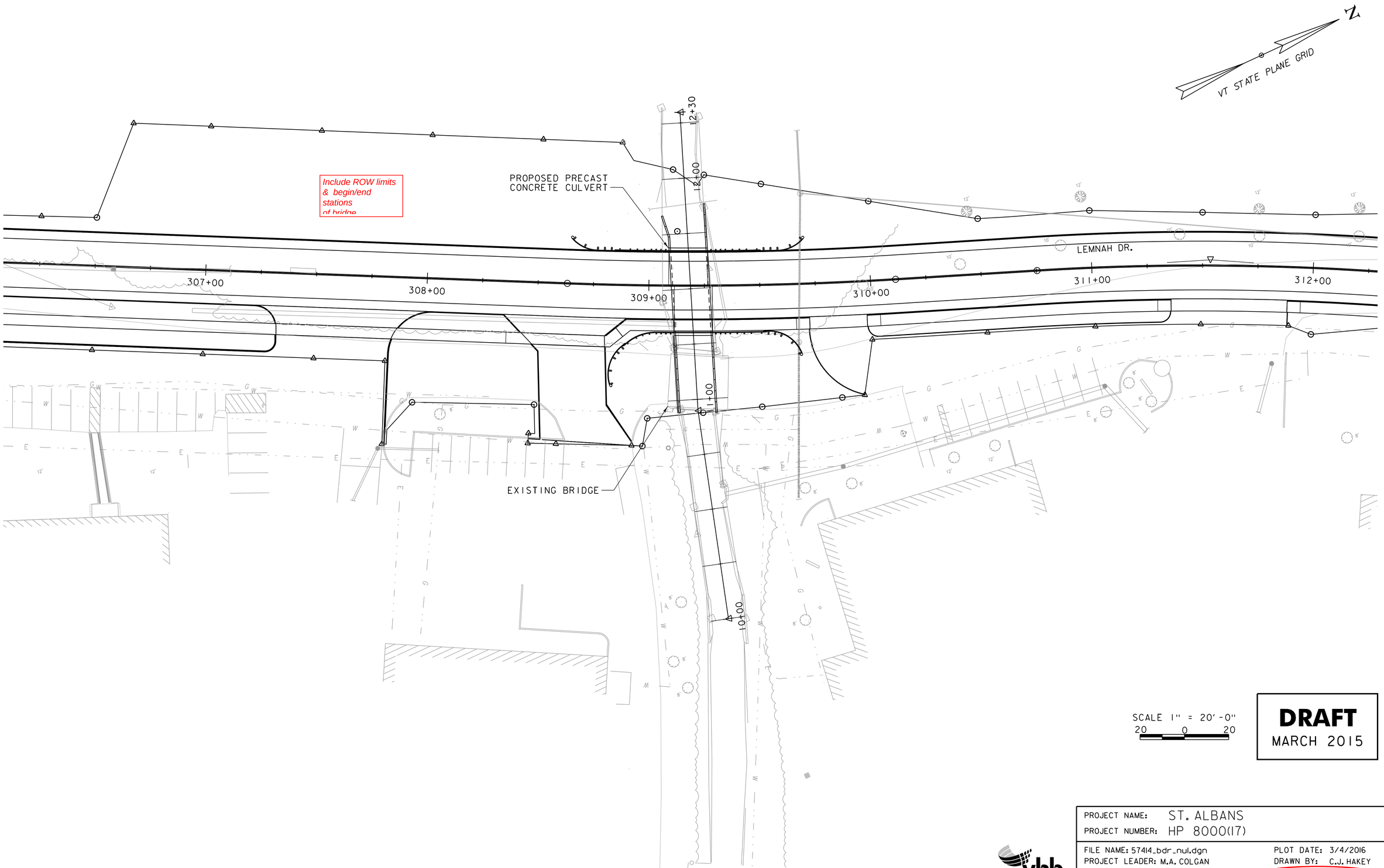

DRAFT
MARCH 2015

PROJECT NAME: ST. ALBANS	
PROJECT NUMBER: HP 8000(17)	
FILE NAME: 57414_bdr_nul.dgn	PLOT DATE: 3/4/2016
PROJECT LEADER: M.A. COLGAN	DRAWN BY: C.J. HAKEY
DESIGNED BY: S.G. FARNSWORTH	CHECKED BY: ------
PLAN LAYOUT	SHEET 218 OF 230

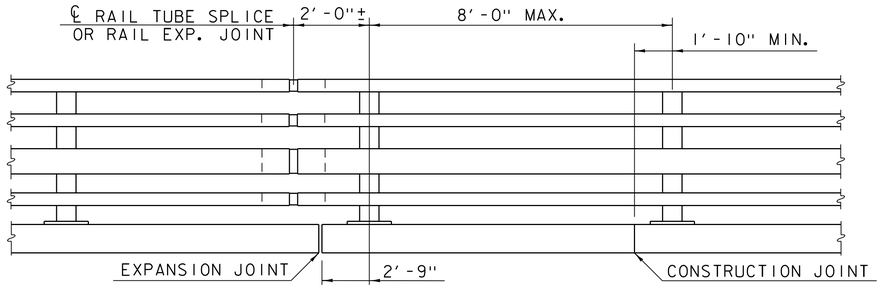

BRIDGE RAILING ELEVATION

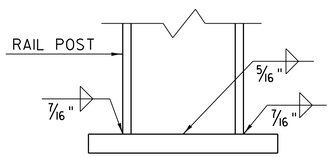

BASE WELD DETAIL

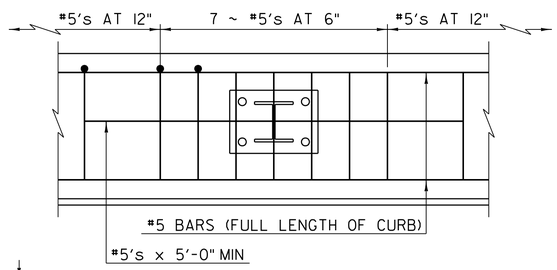

SIDEWALK REINFORCING PLAN

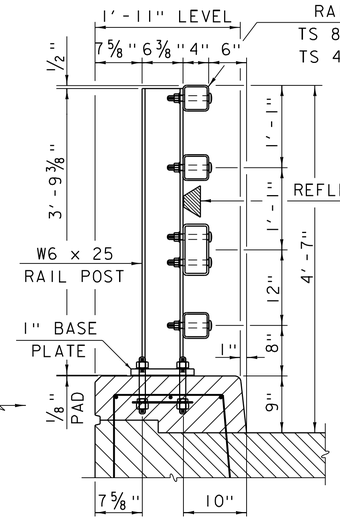

TYPICAL SECTION

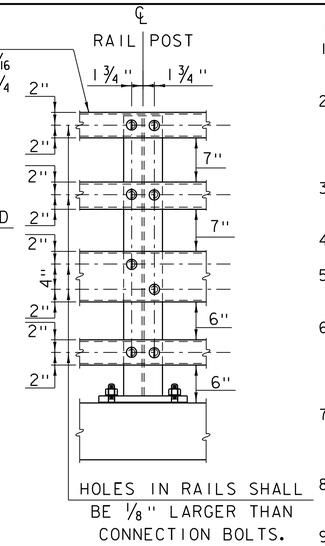

ELEVATION

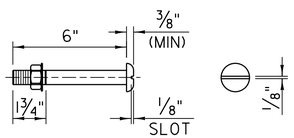

3/4" DIA M164 (TYPE I)
ROUND HEAD BOLT

(WITH WASHER AND PREVAILING TORQUE TYPE LOCK NUT)
(SEE NOTE #9)
ONLY FULL DIAMETER BODY BOLTS WILL BE ALLOWED.

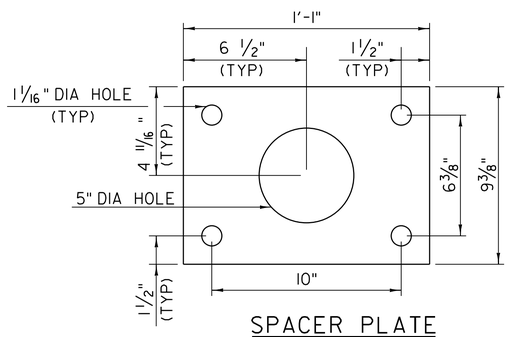

SPACER PLATE

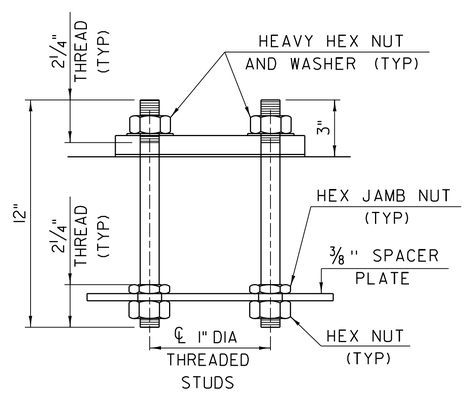

RAIL POST ANCHORAGE

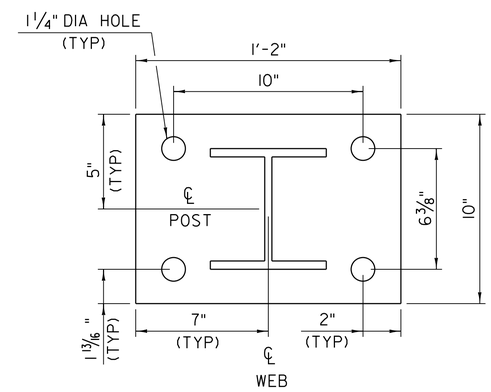

POST AND BASE PLATE

NOTES

1. ALL WORK AND MATERIALS SHALL CONFORM TO THE PROVISIONS OF SECTION 525 - RAILINGS OF THE STANDARD SPECIFICATION FOR CONSTRUCTION.
2. TUBING AND POSTS SHALL MEET THE REQUIREMENTS OF SECTION 732 - RAILING MATERIALS OF THE STANDARD SPECIFICATIONS FOR CONSTRUCTION EXCEPT THE DROP-WEIGHT TEAR TEST IN SECTION 732 SHALL NOT APPLY TO THE STRUCTURAL TUBING IN THIS STANDARD.
3. ALL EXPOSED CUT OR SHEARED EDGES SHALL BE ROUNDED TO A 1/16" RADIUS AND BE FREE OF BURRS.
4. RAIL POSTS SHALL BE SET NORMAL TO GRADE.
5. SECTIONS OF RAIL TUBE SHALL BE ATTACHED TO A MINIMUM OF TWO (2) RAIL POSTS AND PREFERABLY TO AT LEAST FOUR (4) POSTS.
6. RAIL TUBE EXPANSION JOINTS SHALL BE PROVIDED IN ANY RAIL BAY SPANNING A SUPERSTRUCTURE EXPANSION JOINT. EXPANSION JOINT WIDTH SHALL BE "X" AT 45°F AND WILL BE ADJUSTED IN THE FIELD BY THE ENGINEER FOR OTHER TEMPERATURES.
7. ALL PARTS SHALL BE GALVANIZED AFTER FABRICATION IN ACCORDANCE WITH AASHTO M111, EXCEPT THAT HARDWARE SHALL MEET THE REQUIREMENTS OF AASHTO M232.
8. RAIL POSTS ANCHORING NUTS SHALL BE TIGHTENED TO A SNUG FIT AND GIVEN AN ADDITIONAL ONE-EIGHTH TURN.
9. RAIL TUBES SHALL BE ATTACHED USING 3/4" FULL DIAMETER BODY AASHTO M164 (TYPE I) ROUND HEAD BOLTS INSERTED THROUGH THE FACE OF THE TUBE. HOLES IN POSTS SHALL BE 1/16" LARGER THAN THE BOLT SIZE.
10. HOLES IN RAILS FOR RAIL TUBE ATTACHMENT MAY BE FIELD-DRILLED. HOLES SHALL BE COATED WITH AN APPROVED ZINC-RICH PAINT PRIOR TO ERECTION.
11. IF THERE IS A CONFLICT BETWEEN THESE STANDARD DETAILS AND THE DESIGN, THE REQUIREMENTS OF THE DESIGN DRAWINGS SHALL BE FOLLOWED.
12. ANY BENDING OF RAIL SHALL BE BY SHOP PROCEDURE ONLY.
13. THE FABRICATOR SHALL SUBMIT SHOP DRAWINGS INCLUDING WELDING PROCEDURES TO THE STRUCTURES SECTION FOR APPROVAL IN ACCORDANCE WITH THE PROVISION OF 506.04, SHOP DRAWINGS. ALL WELDING SHALL CONFORM WITH SECTION 506.10.
14. RAIL POSTS AND BASE PLATES SHALL BE TESTED FOR IMPACT PROPERTIES IN ACCORDANCE WITH ASTM A-370 CHARPY IMPACT TESTING USING TYPE A SPECIMEN.

MATERIALS

RAIL TUBES.....ASTM A500, GRADE B OR ASTM A501
RAIL POSTS AND BASE PLATES.....ASTM A709A709M, GRADE 50
ALL OTHER SHAPES AND PLATES.....ASTM A709/A709M, GRADE 36
ANCHOR STUDS.....ASTM A449
ALL OTHER BOLTS (UNLESS NOTED).....AASHTO M164, TYPE I

NUTS FOR AASHTO M164 BOLTS AND FOR ANCHOR STUDS SHALL COMPLY WITH AASHTO M291 (ASTM A563).

WASHERS SHALL COMPLY WITH AASHTO M293 (ASTM F436) SPECIFICATIONS.

1/8" PAD SHALL COMPLY WITH STANDARD SPECIFICATION SUBSECTION 731.01 OR 731.02.

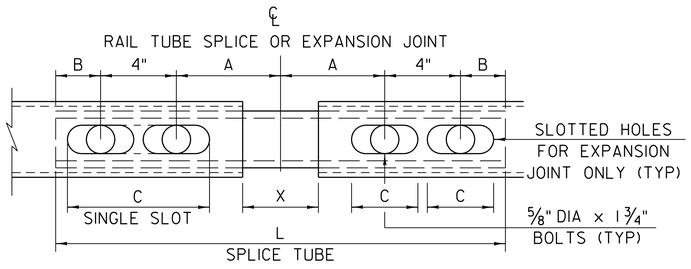

RAIL TUBE SPLICE AND RAIL EXPANSION JOINT DETAIL
(BOTTOM VIEW)

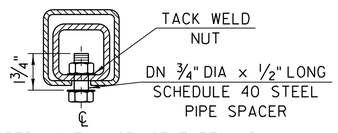

5/8" DIA TAPPED HOLE IN SPLICE TUBE AND 1 1/8" x 'C' SLOT IN RAIL TUBE FOR 5/8" DIA BOLT AND PLAIN HARDENED WASHER

EXPANSION JOINT SECTION

FOR DETAILS NOT SHOWN, SEE "RAIL TUBE SPLICE SECTION."

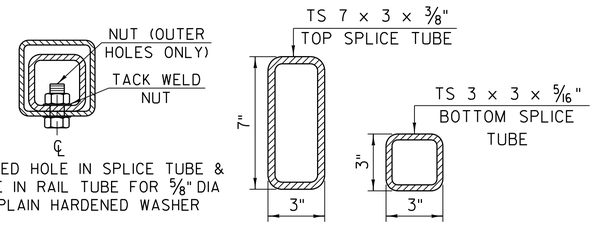

5/8" DIA TAPPED HOLE IN SPLICE TUBE & 3/4" DIA HOLE IN RAIL TUBE FOR 5/8" DIA BOLT & PLAIN HARDENED WASHER

RAIL TUBE SPLICE SECTION

SPLICE TABLE

T	A	B	C	L	X
N/A	4"	2"	--	20"	3/4"
EXPANSION JOINT TABLE					
≤4"	4"	2"	2 1/2"	20"	2 1/2"
>4" ≤6 1/2"	5 1/2"	2 3/8"	3 1/2"	23 3/4"	4"
>6 1/2" ≤9"	6 1/2"	3 3/8"	9"*	27 3/4"	5"
>9" ≤13"	8 1/2"	4 3/8"	11"*	33 3/4"	7"

T = TOTAL MOVEMENT BETWEEN BRIDGE EXPANSION JOINTS. SEE NOTE 6.
* = SINGLE SLOT

PROJECT NAME: ST. ALBANS
PROJECT NUMBER: HP 8000(17)

FILE NAME: 57414_brail.dgn
PROJECT LEADER: J. D. SALADINO
DESIGNED BY: S.G. FARNSWORTH
BRIDGE RAIL-CURB MOUNTED (SHEET 1 OF 3)
PLOT DATE: 3/4/2016
DRAWN BY: C.J. HAKEY
CHECKED BY: ------
SHEET 219 OF 230

VHB 57414

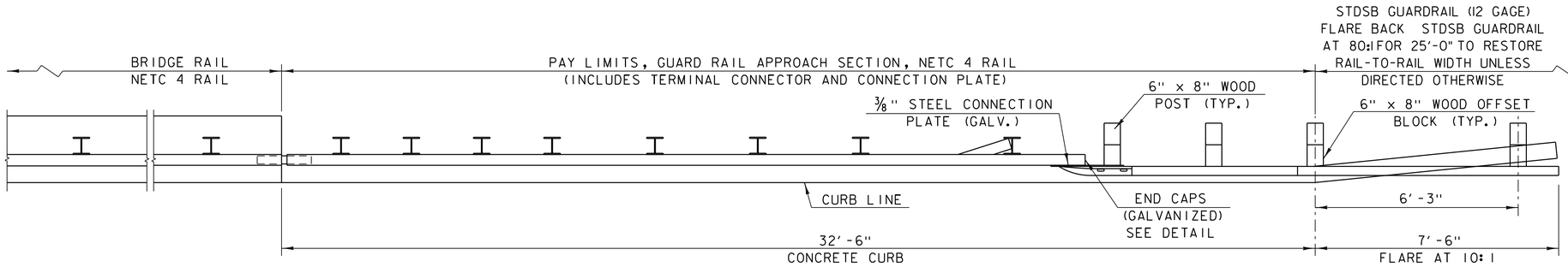

PLAN VIEW - APPROACH RAIL

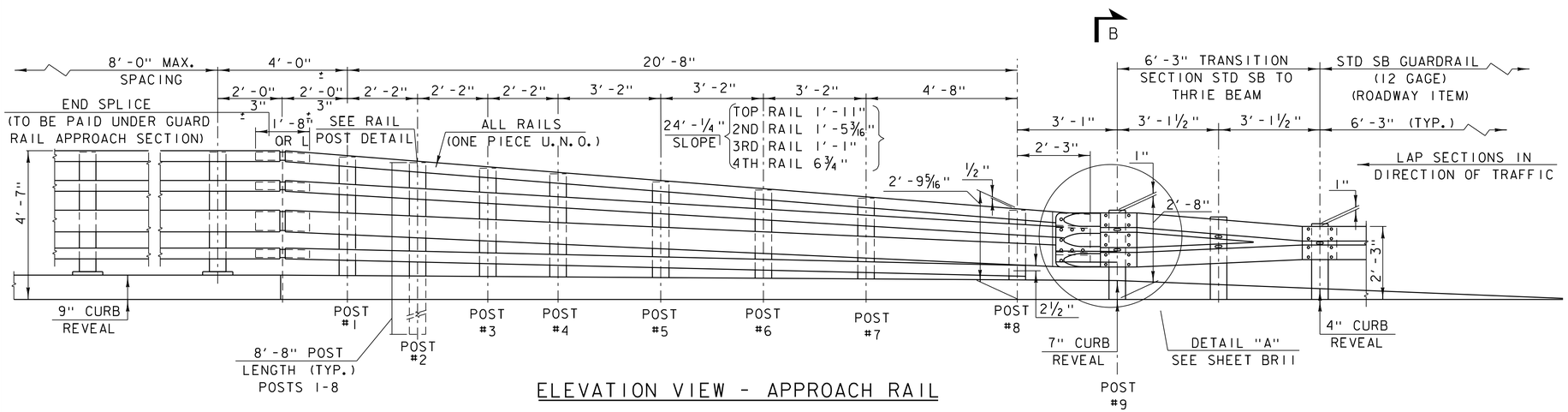

ELEVATION VIEW - APPROACH RAIL

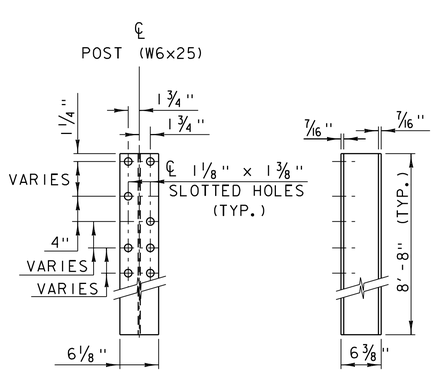

RAIL POST

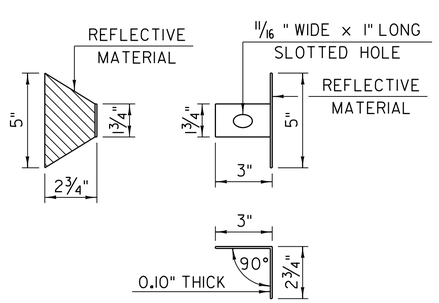

DELINEATION
DEVICE DETAILS

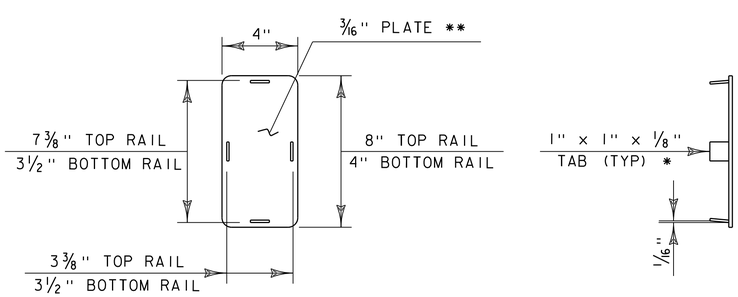

END CAP DETAIL

* WELD TABS TO END CAP PLATE IN TAPERED POSITION SO CAP CAN BE JAMMED INTO END OF RAIL TUBE.

** ROUND CORNERS 1/2" RADIUS (TYP)

NOTES

1. REFER TO SHEET BR9 FOR ADDITIONAL DETAILS, NOTES AND MATERIAL SPECIFICATIONS.
2. PAYMENT FOR GUARD RAIL APPROACH SECTION - NETC 4 RAIL SHALL INCLUDE THE TERMINAL CONNECTOR, THE CONNECTION PLATE, RAIL, POSTS, BLOCKS AND ATTACHMENT HARDWARE.
3. THE REFLECTORIZED ALUMINUM DELINEATION IS TO BE ERECTED EVERY 30' (OR CLOSEST POST) WITH A 5/8" DIAMETER BOLT. DELINEATORS SHALL MEET SPECIFICATION REQUIREMENTS FOR ASTM B209 ALLOY 5052-H32.
4. REFLECTIVE MATERIAL SHALL MEET REQUIREMENTS OF SUBSECTION 750.08 AND SHALL BE OF ENCAPSULATED LENS SILVER OR AMBER. AMBER IS TO BE INSTALLED ON THE DRIVER'S LEFT AND SILVER ON THEIR RIGHT.
5. ON BRIDGES WITH A SIDEWALK, DELINEATORS ARE NOT TO BE INSTALLED ON THE SIDEWALK SIDE OF THE BRIDGE (I.E. DELINEATORS INSTALLED ONLY ON THE CURB SIDE AND ON THE APPROACH ON THE CURB SIDE). PAYMENT SHALL BE SUBSIDIARY TO ALL OTHER ITEMS.
6. ALL APPROACH RAIL SPLICES SHALL BE LAPPED IN THE DIRECTION OF TRAFFIC FLOW.
7. ALL BRIDGE APPROACH RAIL MATERIALS, DIMENSION SIZES AND NOTES SHALL BE THE SAME AS THOSE OF THE BRIDGE RAIL, UNLESS OTHERWISE NOTED.
8. CARRIAGE BOLTS SHALL BE AASHTO M164 AND NUTS SHALL BE ASTM A563 GRADE A OR BETTER (GALVANIZED).
9. WELD SPLICE BARS TO FIT BEND. USE COMPLETE PENETRATION WELD (B-U2).
10. THE CONCRETE CURB WILL BE PAID FOR AS ITEM 616.20, "CAST- IN-PLACE CONCRETE CURB, TYPE B."

PROJECT NAME: ST. ALBANS	
PROJECT NUMBER: HP 8000(17)	
FILE NAME: 57414_brail.dgn	PLOT DATE: 3/4/2016
PROJECT LEADER: J. D. SALADINO	DRAWN BY: C.J. HAKEY
DESIGNED BY: S.G. FARNSWORTH	CHECKED BY: ------
BRIDGE RAIL-CURB MOUNTED (SHEET 2 OF 3)	SHEET 220 OF 230

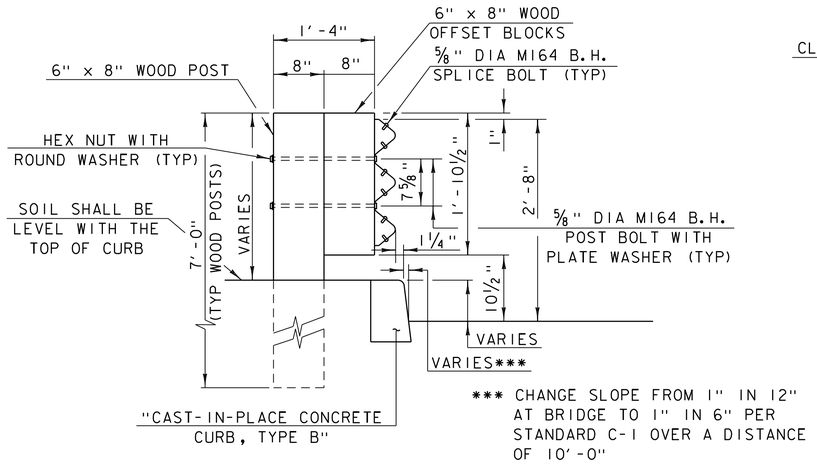

SECTION B-B (POST RAIL ASSEMBLY)

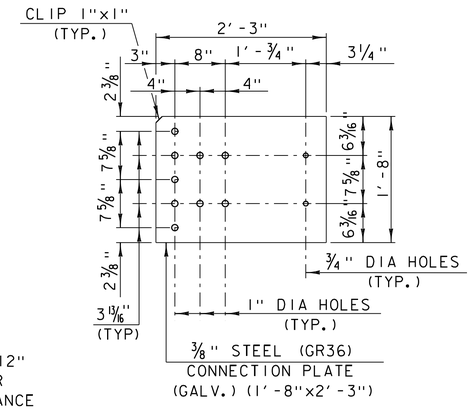

CONNECTION PLATE

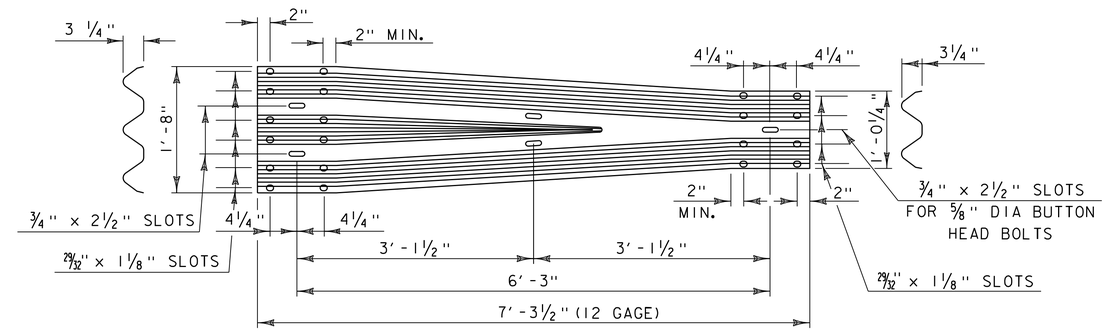

THRIE-BEAM TO STD SB TRANSITION SECTION

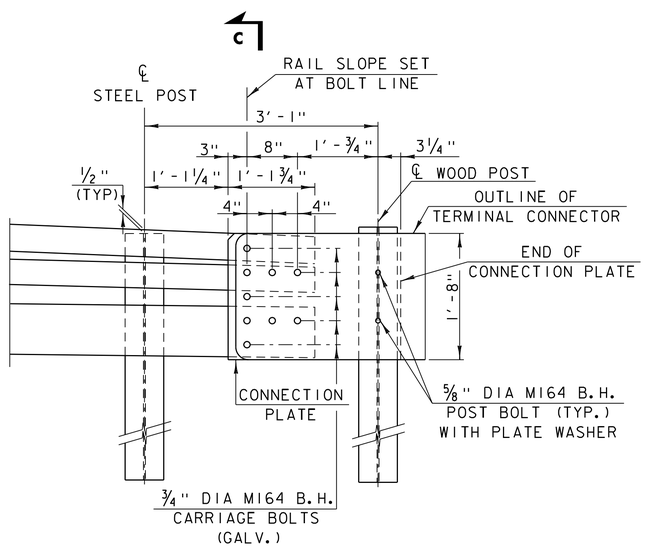

DETAIL A

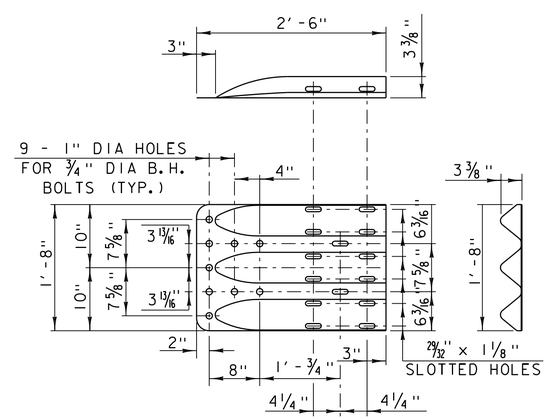

THRIE-BEAM TERMINAL CONNECTOR

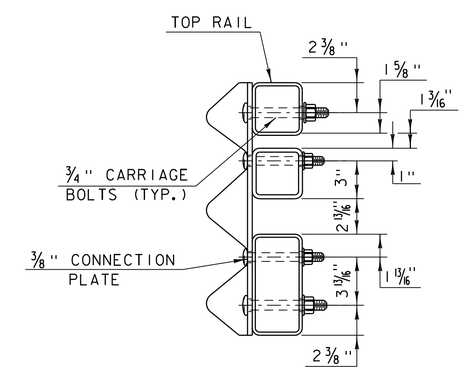

SECTION C-C (CONNECTION PLATE)

PROJECT NAME: ST. ALBANS	
PROJECT NUMBER: HP 8000(17)	
FILE NAME: 57414_brail.dgn	PLOT DATE: 3/4/2016
PROJECT LEADER: J. D. SALADINO	DRAWN BY: C.J. HAKEY
DESIGNED BY: S.G. FARNSWORTH	CHECKED BY: ------
BRIDGE RAIL-CURB MOUNTED (SHEET 3 OF 3)	SHEET 221 OF 230

VHB 57414

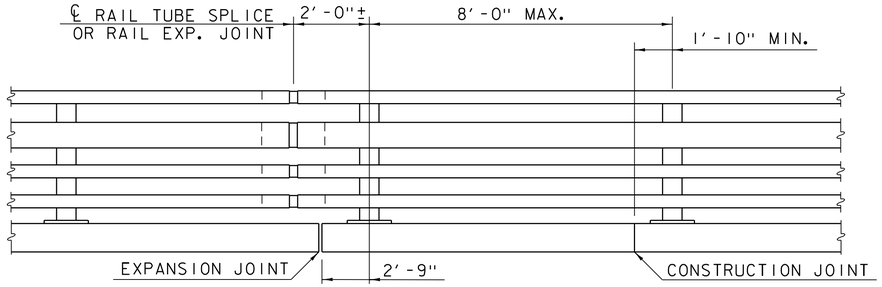

BRIDGE RAILING ELEVATION

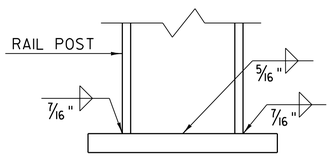

BASE WELD DETAIL

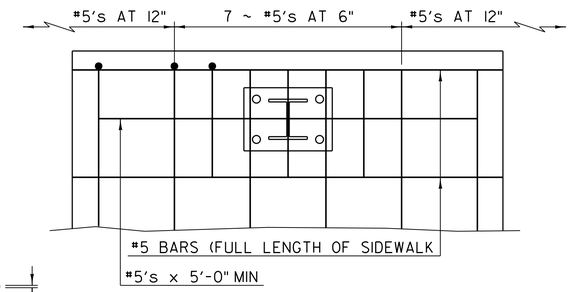

SIDEWALK REINFORCING PLAN

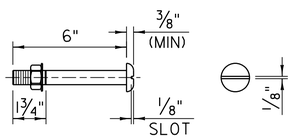

3/4" DIA M164 (TYPE I)
ROUND HEAD BOLT

(WITH WASHER AND PREVAILING TORQUE TYPE LOCK NUT)
(SEE NOTE #9)
ONLY FULL DIAMETER BODY BOLTS WILL BE ALLOWED.

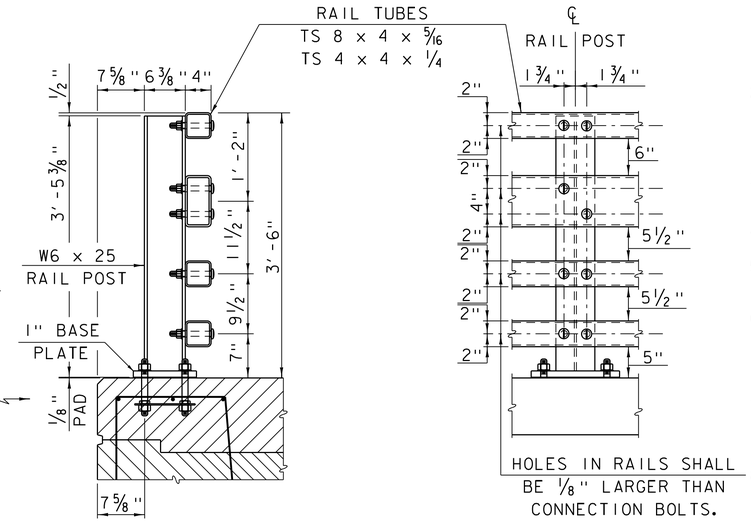

TYPICAL SECTION

ELEVATION

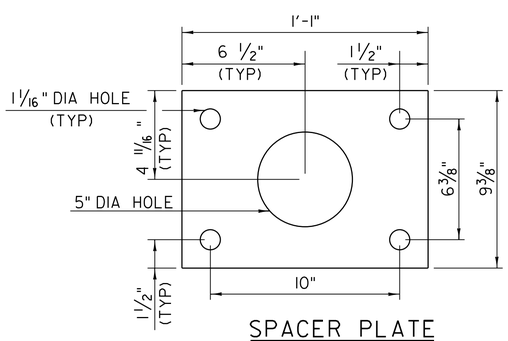

SPACER PLATE

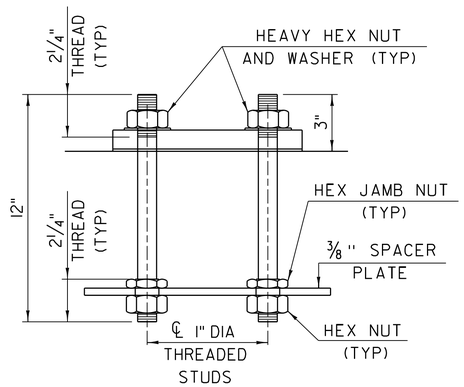

RAIL POST ANCHORAGE

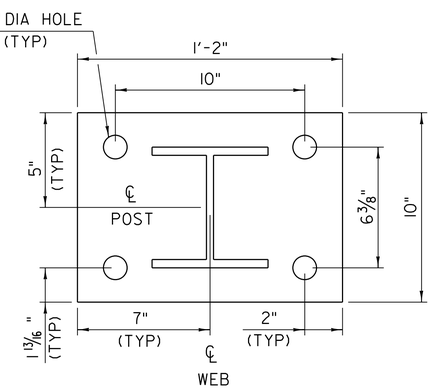

POST AND BASE PLATE

NOTES

1. ALL WORK AND MATERIALS SHALL CONFORM TO THE PROVISIONS OF SECTION 525 - RAILINGS OF THE STANDARD SPECIFICATION FOR CONSTRUCTION.
2. TUBING AND POSTS SHALL MEET THE REQUIREMENTS OF SECTION 732 - RAILING MATERIALS OF THE STANDARD SPECIFICATIONS FOR CONSTRUCTION EXCEPT THE DROP-WEIGHT TEAR TEST IN SECTION 732 SHALL NOT APPLY TO THE STRUCTURAL TUBING IN THIS STANDARD.
3. ALL EXPOSED CUT OR SHEARED EDGES SHALL BE ROUNDED TO A 1/16" RADIUS AND BE FREE OF BURRS.
4. RAIL POSTS SHALL BE SET NORMAL TO GRADE.
5. SECTIONS OF RAIL TUBE SHALL BE ATTACHED TO A MINIMUM OF TWO (2) RAIL POSTS AND PREFERABLY TO AT LEAST FOUR (4) POSTS.
6. RAIL TUBE EXPANSION JOINTS SHALL BE PROVIDED IN ANY RAIL BAY SPANNING A SUPERSTRUCTURE EXPANSION JOINT. EXPANSION JOINT WIDTH SHALL BE "X" AT 45°F AND WILL BE ADJUSTED IN THE FIELD BY THE ENGINEER FOR OTHER TEMPERATURES.
7. ALL PARTS SHALL BE GALVANIZED AFTER FABRICATION IN ACCORDANCE WITH AASHTO M111, EXCEPT THAT HARDWARE SHALL MEET THE REQUIREMENTS OF AASHTO M232.
8. RAIL POSTS ANCHORING NUTS SHALL BE TIGHTENED TO A SNUG FIT AND GIVEN AN ADDITIONAL ONE-EIGHTH TURN.
9. RAIL TUBES SHALL BE ATTACHED USING 3/4" FULL DIAMETER BODY AASHTO M164 (TYPE I) ROUND HEAD BOLTS INSERTED THROUGH THE FACE OF THE TUBE. HOLES IN POSTS SHALL BE 1/16" LARGER THAN THE BOLT SIZE.
10. HOLES IN RAILS FOR RAIL TUBE ATTACHMENT MAY BE FIELD-DRILLED. HOLES SHALL BE COATED WITH AN APPROVED ZINC-RICH PAINT PRIOR TO ERECTION.
11. IF THERE IS A CONFLICT BETWEEN THESE STANDARD DETAILS AND THE DESIGN, THE REQUIREMENTS OF THE DESIGN DRAWINGS SHALL BE FOLLOWED.
12. ANY BENDING OF RAIL SHALL BE BY SHOP PROCEDURE ONLY.
13. THE FABRICATOR SHALL SUBMIT SHOP DRAWINGS INCLUDING WELDING PROCEDURES TO THE STRUCTURES SECTION FOR APPROVAL IN ACCORDANCE WITH THE PROVISION OF 506.04, SHOP DRAWINGS. ALL WELDING SHALL CONFORM WITH SECTION 506.10.
14. RAIL POSTS AND BASE PLATES SHALL BE TESTED FOR IMPACT PROPERTIES IN ACCORDANCE WITH ASTM A-370 CHARPY IMPACT TESTING USING TYPE A SPECIMEN.

MATERIALS

RAIL TUBES.....ASTM A500, GRADE B OR ASTM A501
RAIL POSTS AND BASE PLATES.....ASTM A709A709M, GRADE 50
ALL OTHER SHAPES AND PLATES.....ASTM A709/A709M, GRADE 36
ANCHOR STUDS.....ASTM A449
ALL OTHER BOLTS (UNLESS NOTED).....AASHTO M164, TYPE I

NUTS FOR AASHTO M164 BOLTS AND FOR ANCHOR STUDS SHALL COMPLY WITH AASHTO M291 (ASTM A563).

WASHERS SHALL COMPLY WITH AASHTO M293 (ASTM F436) SPECIFICATIONS.

1/8" PAD SHALL COMPLY WITH STANDARD SPECIFICATION SUBSECTION 731.01 OR 731.02.

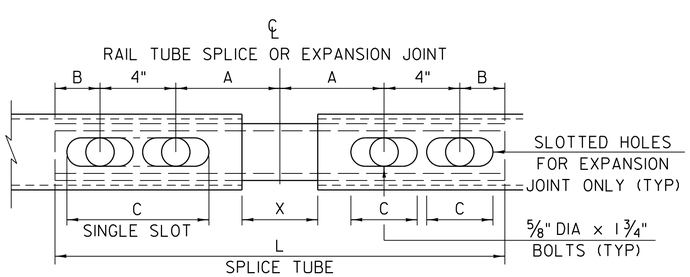

RAIL TUBE SPLICE AND RAIL
EXPANSION JOINT DETAIL
(BOTTOM VIEW)

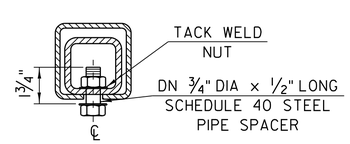

5/8" DIA TAPPED HOLE IN SPLICE TUBE AND 1 1/8" x 'C' SLOT IN RAIL TUBE FOR 5/8" DIA BOLT AND PLAIN HARDENED WASHER

EXPANSION JOINT SECTION

FOR DETAILS NOT SHOWN,
SEE "RAIL TUBE SPLICE SECTION."

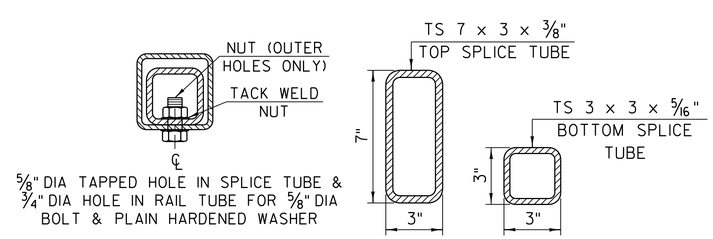

5/8" DIA TAPPED HOLE IN SPLICE TUBE &
3/4" DIA HOLE IN RAIL TUBE FOR 5/8" DIA
BOLT & PLAIN HARDENED WASHER

RAIL TUBE SPLICE SECTION

SPLICE TABLE					
T	A	B	C	L	X
N/A	4"	2"	--	20"	3/4"
EXPANSION JOINT TABLE					
≤4"	4"	2"	2 1/2"	20"	2 1/2"
>4" ≤6 1/2"	5 1/2"	2 3/8"	3 1/2"	23 3/4"	4"
>6 1/2" ≤9"	6 1/2"	3 3/8"	9"*	27 3/4"	5"
>9" ≤13"	8 1/2"	4 3/8"	11"*	33 3/4"	7"

T = TOTAL MOVEMENT BETWEEN BRIDGE EXPANSION JOINTS. SEE NOTE 6.
* = SINGLE SLOT

PROJECT NAME: ST. ALBANS
PROJECT NUMBER: HP 8000(17)

FILE NAME: 57414_brail.dgn
PROJECT LEADER: J. D. SALADINO
DESIGNED BY: S.G. FARNSWORTH
BRIDGE RAIL-SIDEWALK (SHEET 1 OF 3)
PLOT DATE: 3/4/2016
DRAWN BY: C.J. HAKEY
CHECKED BY: ------
SHEET 222 OF 230

VHB 57414

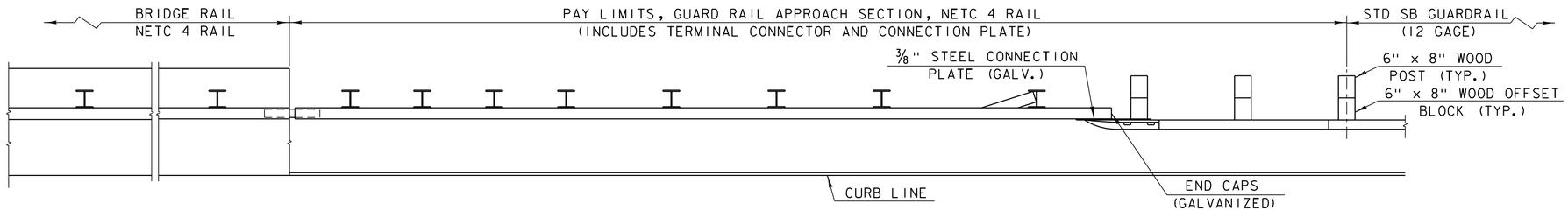

PLAN VIEW - APPROACH RAIL

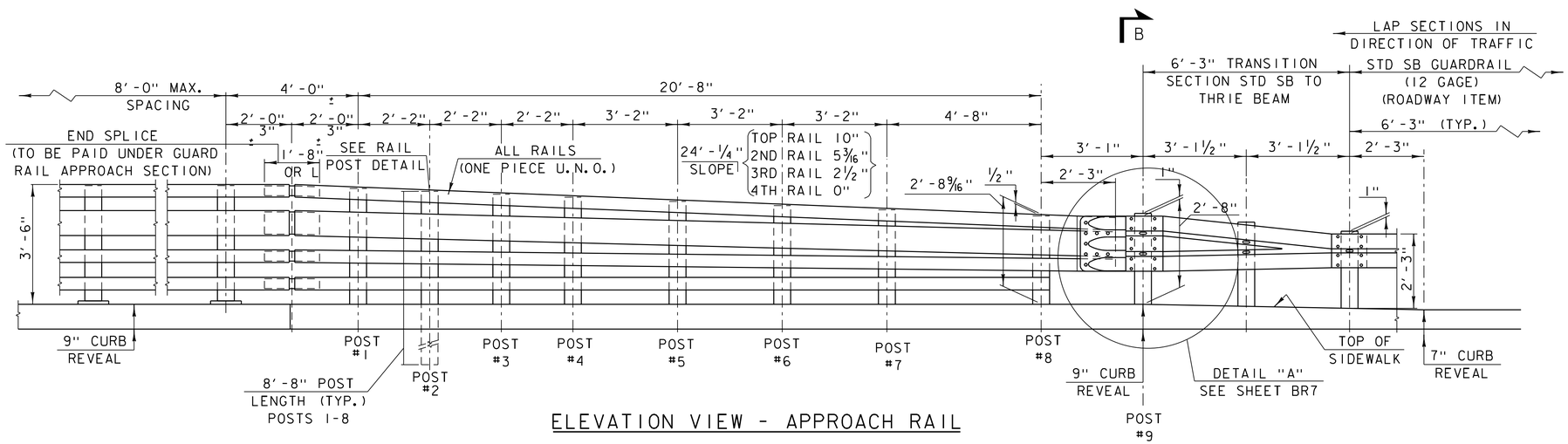

ELEVATION VIEW - APPROACH RAIL

NOTES

1. REFER TO SHEET BR5 FOR ADDITIONAL DETAILS, NOTES AND MATERIAL SPECIFICATIONS.
2. PAYMENT FOR GUARD RAIL APPROACH SECTION - NETC 4 RAIL SHALL INCLUDE THE TERMINAL CONNECTOR, THE CONNECTION PLATE, RAIL, POSTS, BLOCKS AND ATTACHMENT HARDWARE.
3. NOT USED.
4. NOT USED.
5. NOT USED
6. ALL APPROACH RAIL SPLICES SHALL BE LAPPED IN THE DIRECTION OF TRAFFIC FLOW.
7. ALL BRIDGE APPROACH RAIL MATERIALS, DIMENSION SIZES AND NOTES SHALL BE THE SAME AS THOSE OF THE BRIDGE RAIL, UNLESS OTHERWISE NOTED.
8. CARRIAGE BOLTS SHALL BE AASHTO M164 AND NUTS SHALL BE ASTM A563 GRADE A OR BETTER (GALVANIZED).
9. WELD SPLICE BARS TO FIT BEND. USE COMPLETE PENETRATION WELD (B-U2).
10. NOT USED.

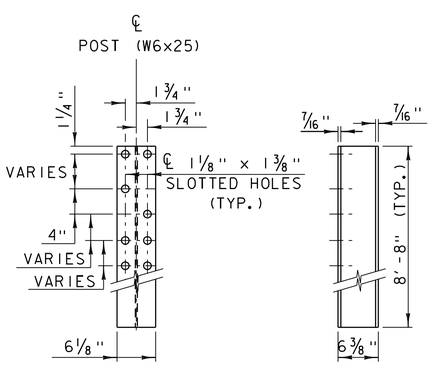

RAIL POST

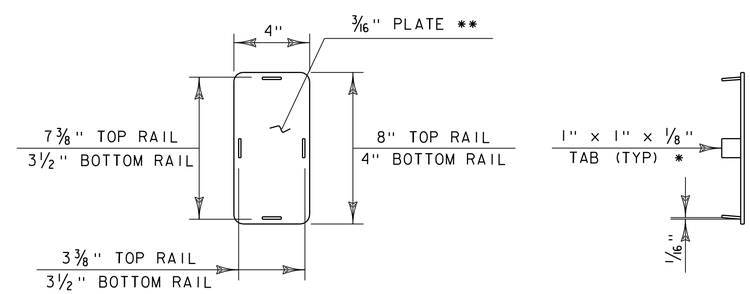

END CAP DETAIL

* WELD TABS TO END CAP PLATE IN TAPERED POSITION SO CAP CAN BE JAMMED INTO END OF RAIL TUBE.

** ROUND CORNERS 1/2" RADIUS (TYP)

PROJECT NAME: ST. ALBANS	
PROJECT NUMBER: HP 8000(17)	
FILE NAME: 57414_brail.dgn	PLOT DATE: 3/4/2016
PROJECT LEADER: J. D. SALADINO	DRAWN BY: C.J. HAKEY
DESIGNED BY: S.G. FARNSWORTH	CHECKED BY: ------
BRIDGE RAIL-SIDEWALK (SHEET 2 OF 3)	SHEET 223 OF 230

VHB 57414

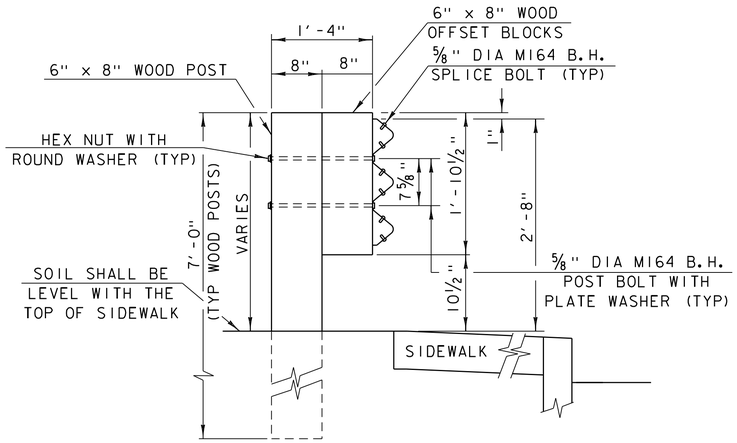

SECTION B-B (POST RAIL ASSEMBLY)

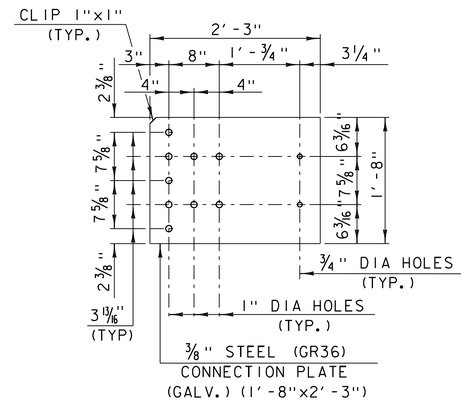

CONNECTION PLATE

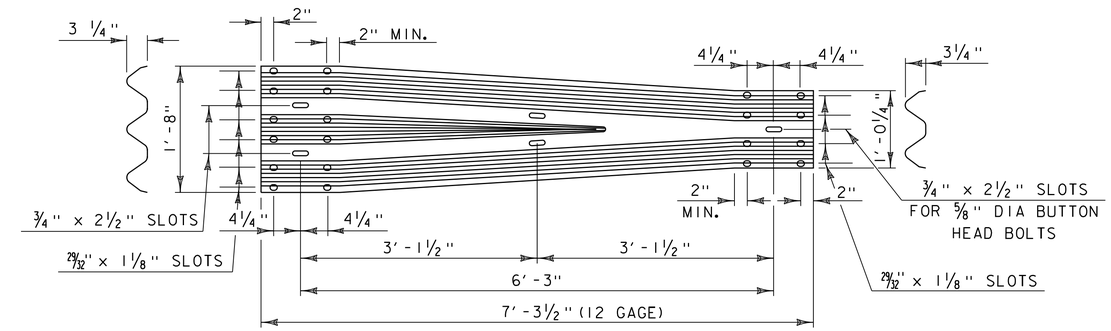

THRIE-BEAM TO STD SB TRANSITION SECTION

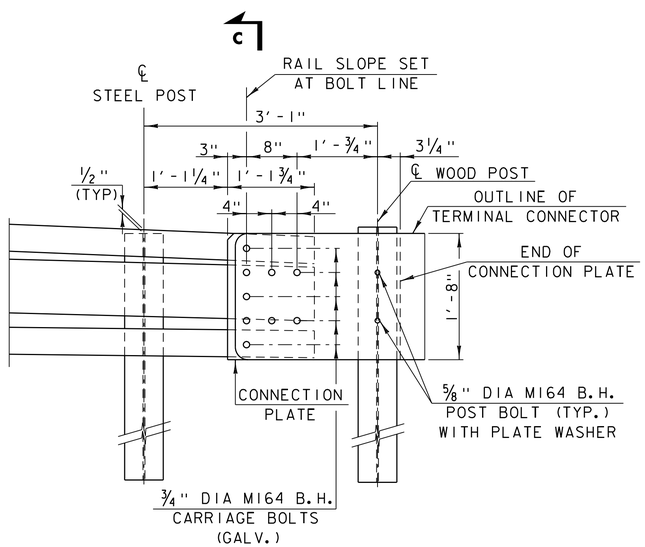

DETAIL A

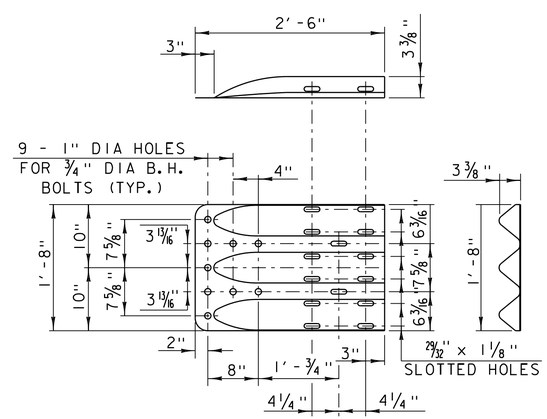

THRIE-BEAM TERMINAL CONNECTOR

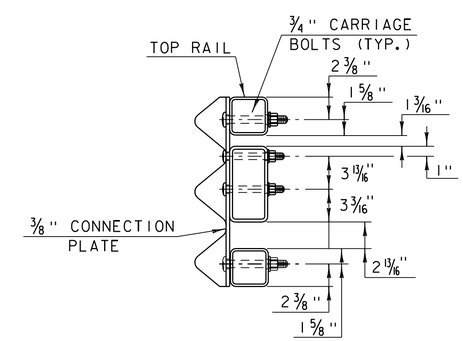

SECTION C-C (CONNECTION PLATE)

PROJECT NAME: ST. ALBANS	
PROJECT NUMBER: HP 8000(17)	
FILE NAME: 57414_brail.dgn	PLOT DATE: 3/4/2016
PROJECT LEADER: J. D. SALADINO	DRAWN BY: C.J. HAKEY
DESIGNED BY: S.G. FARNSWORTH	CHECKED BY: ------
BRIDGE RAIL-SIDEWALK (SHEET 3 OF 3)	SHEET 224 OF 230

VHB 57414

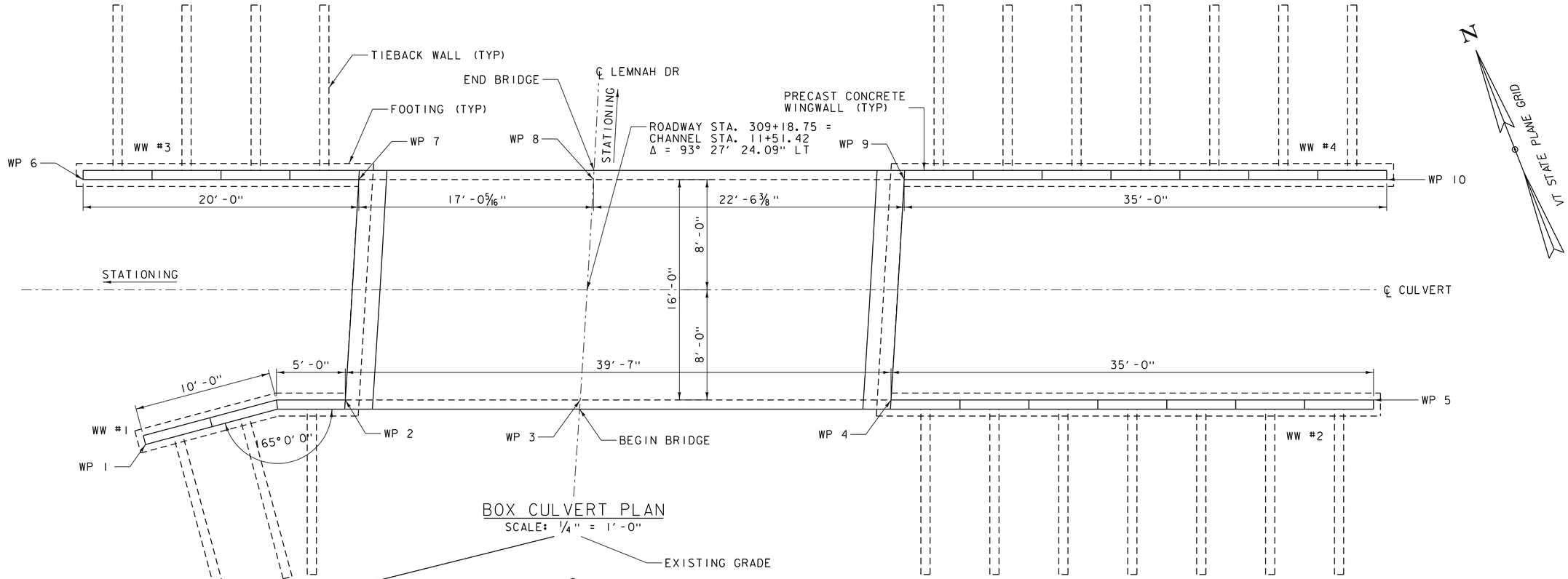

BOX CULVERT PLAN
SCALE: 1/4" = 1'-0"

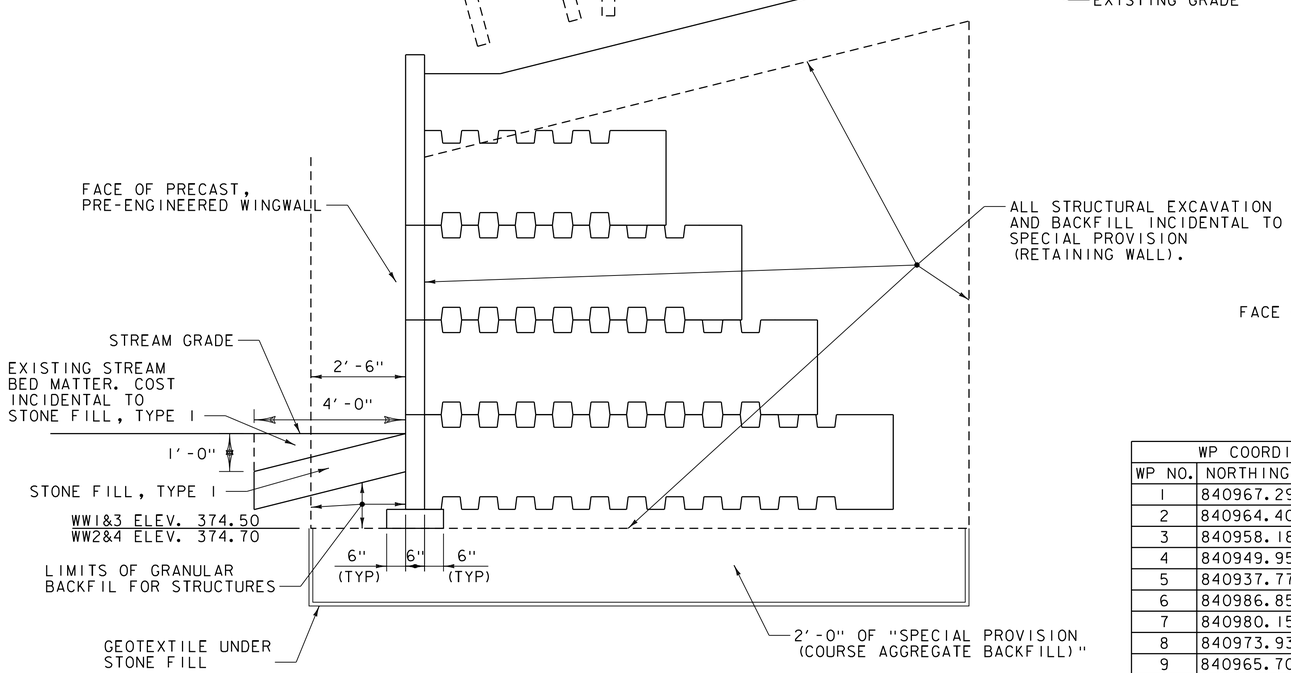

SECTION A-A
WINGWALL FOOTING
SCALE: 1/2" = 1'-0"

WP COORDINATES		
WP NO.	NORTHING	EASTING
1	840967.29	1487379.80
2	840964.40	1487394.18
3	840958.18	1487410.04
4	840949.95	1487431.03
5	840937.77	1487463.90
6	840986.85	1487382.60
7	840980.15	1487401.49
8	840973.93	1487417.34
9	840965.70	1487438.32
10	870952.32	1487470.63

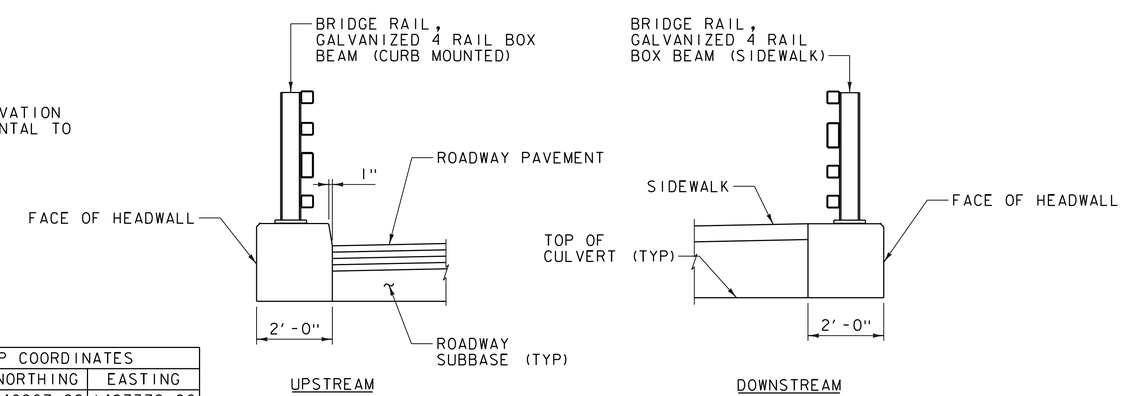

SECTION B-B
HEADWALL DETAIL
SCALE: 1/2" = 1'-0"

PROJECT NAME: ST. ALBANS
PROJECT NUMBER: HP 8000(17)

FILE NAME: 57414_det.dgn
PROJECT LEADER: M.A. COLGAN
DESIGNED BY: S.G. FARNSWORTH
CULVERT PLAN & WINGWALL DETAILS

PLOT DATE: 3/4/2016
DRAWN BY: C.J. HAKEY
CHECKED BY:
SHEET 225 OF 230

VHB 57414.00

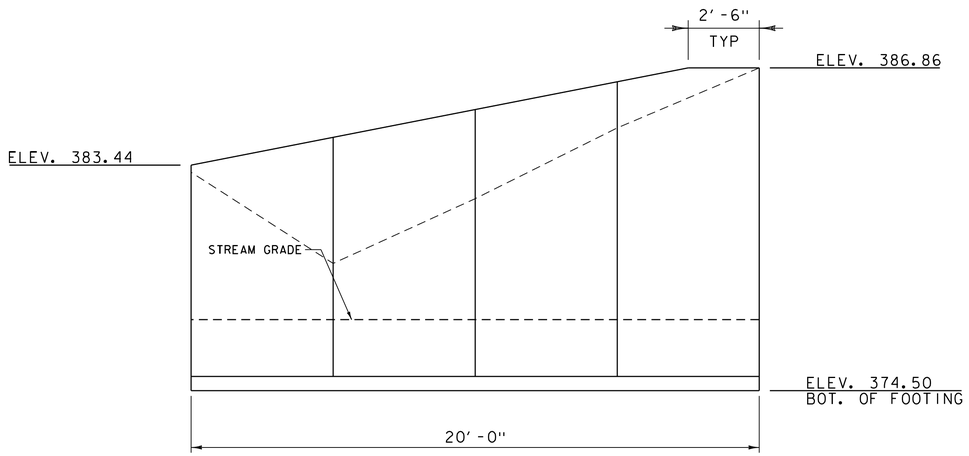

WW #3
SCALE: 3/8" = 1'-0"

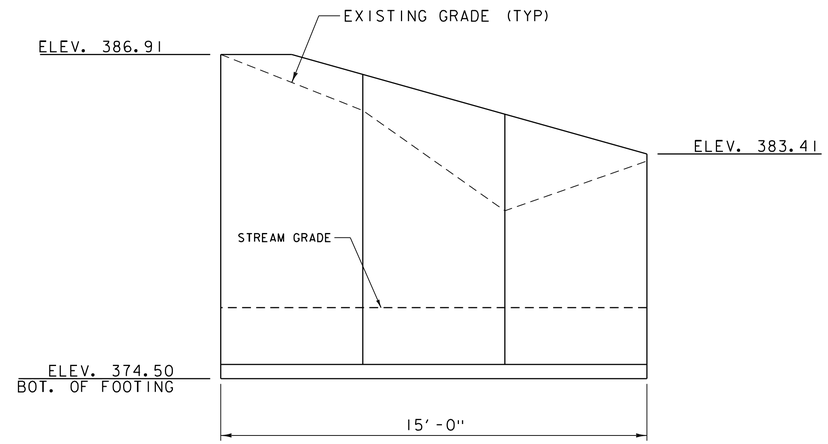

WW #1
SCALE: 3/8" = 1'-0"

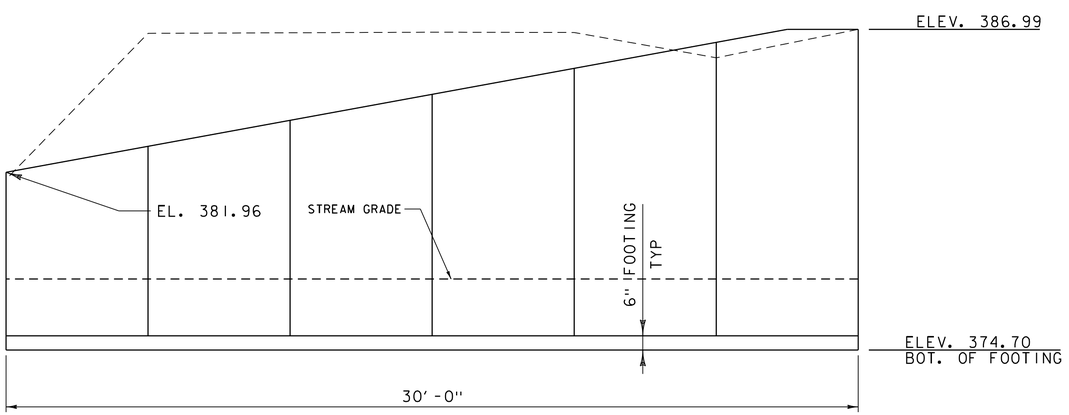

WW #2
SCALE: 3/8" = 1'-0"

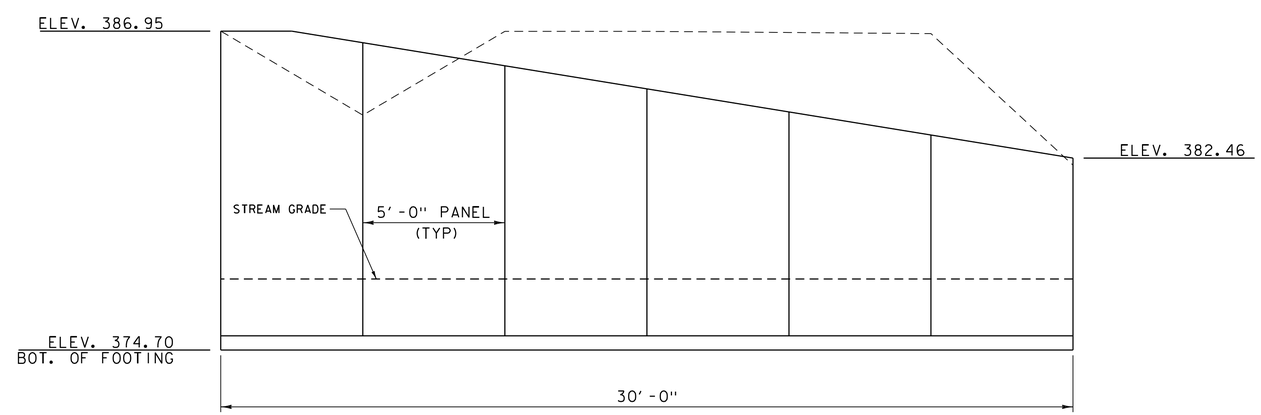

WW #4
SCALE: 3/8" = 1'-0"

PROJECT NAME: ST. ALBANS	
PROJECT NUMBER: HP 8000(17)	
FILE NAME: 57414_det.dgn	PLOT DATE: 3/4/2016
PROJECT LEADER: M.A. COLGAN	DRAWN BY: C.J. HAKEY
DESIGNED BY: S.G. FARNSWORTH	CHECKED BY:
WINGWALL DETAILS	SHEET 226 OF 230

VHB 57414.00

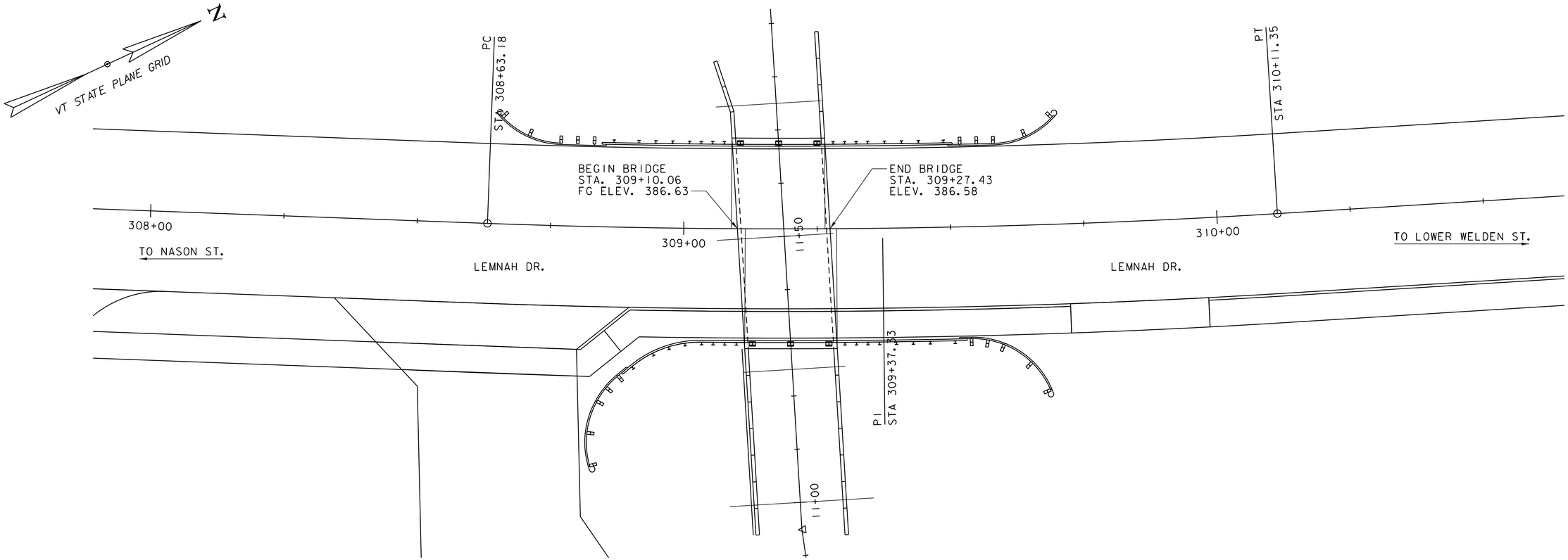

PLAN
SCALE: 1" = 10'-0"

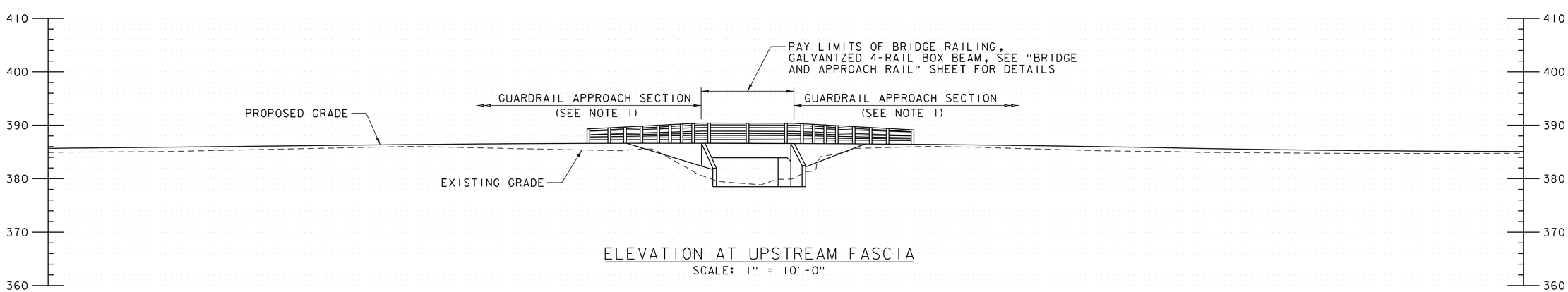

ELEVATION AT UPSTREAM FASCIA
SCALE: 1" = 10'-0"

NOTES:

1. GUARDRAIL APPROACH SECTIONS SHALL BE GALVANIZED 4 RAIL BOX BEAM

PROJECT NAME: ST. ALBANS	
PROJECT NUMBER: HP 8000(17)	
FILE NAME: 57414_pe.dgn	PLOT DATE: 3/4/2016
PROJECT LEADER: J. D. SALADINO	DRAWN BY: C.J. HAKEY
DESIGNED BY: S.G. FARNSWORTH	CHECKED BY: ------
PLAN AND ELEVATION	SHEET 227 OF 230

VHB 57414.00

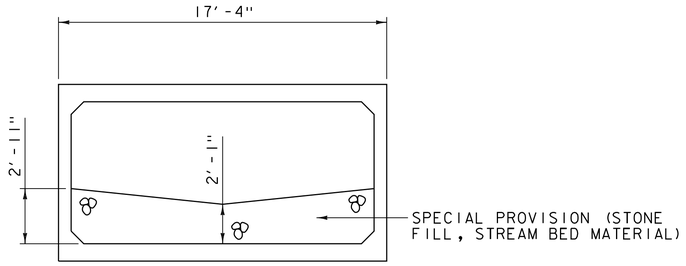

STONE FILL, STREAMBED MATERIAL NOTES:

1. STREAMBED MATERIAL SHALL BE GRADED TO REMAIN STABLE DURING HIGH FLOWS AND TO PROHIBIT SUBSURFACE FLOW DURING LOW FLOW CONDITIONS. SEE TABLE FOR GRADATION SPECIFICATIONS.
2. MINIMUM EMBEDMENT DEPTH SHALL BE 2'-1".

BED RETENTION SILL
1/4" = 1'-0"

Where are the hydraulics calculations for this structure? We recommended a 20' wide by 6' high structure in 2008. We don't think it should be any

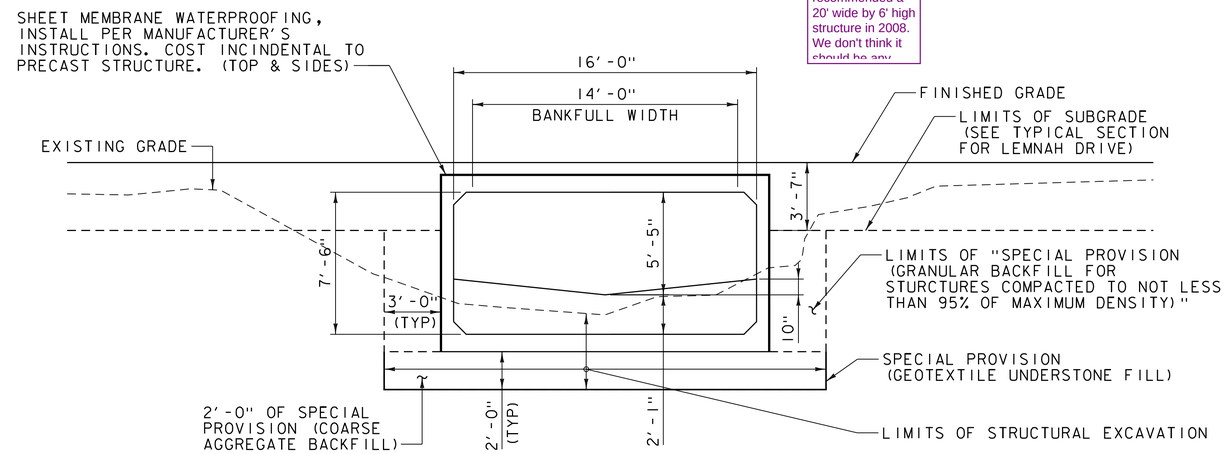

CULVERT TYPICAL SECTION
1/4" = 1'-0"

D(x) %	64-1	METHOD	NOTES
D5	0.00	FULLER-THOMPSON	FINE MATERIAL TO PROHIBIT SUBSURFACE FLOW
D16	0.00	FULLER-THOMPSON	FINE MATERIAL TO PROHIBIT SUBSURFACE FLOW
D50	0.00	ISBASH CURVE	STABLE COARSE MATERIAL
D100	0.00	ISBASH CURVE	IMMOBILE MATERIAL

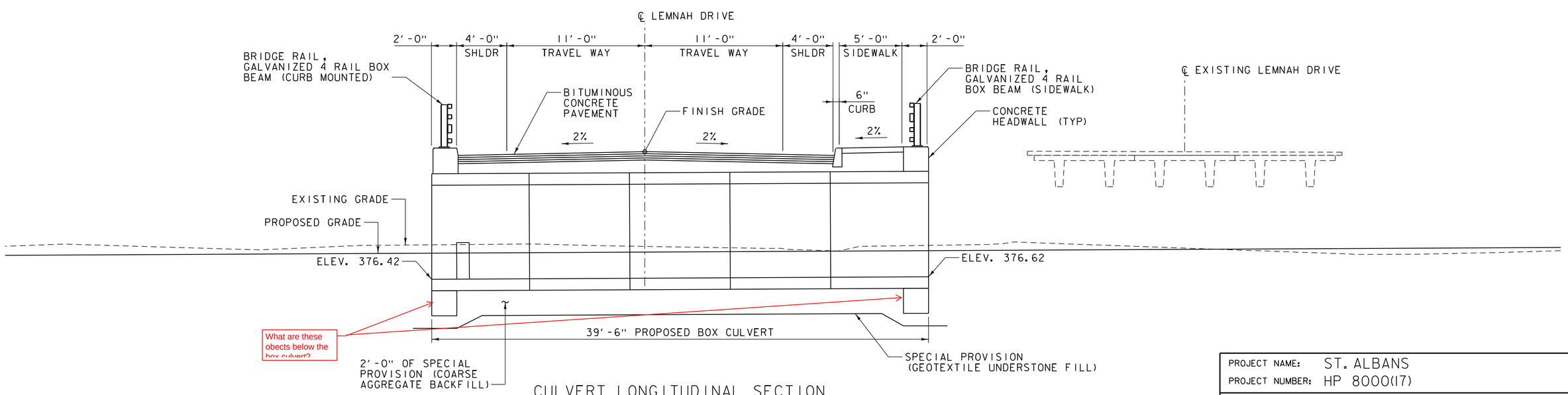

CULVERT LONGITUDINAL SECTION
1/4" = 1'-0"

PROJECT NAME: ST. ALBANS	
PROJECT NUMBER: HP 8000(17)	
FILE NAME: 57414_typ.dgn	PLOT DATE: 3/4/2016
PROJECT LEADER: J. D. SALADINO	DRAWN BY: C.J. HAKEY
DESIGNED BY: S.G. FARNSWORTH	CHECKED BY: ------
TYPICAL SECTIONS	SHEET 228 OF 230

VHB 57414

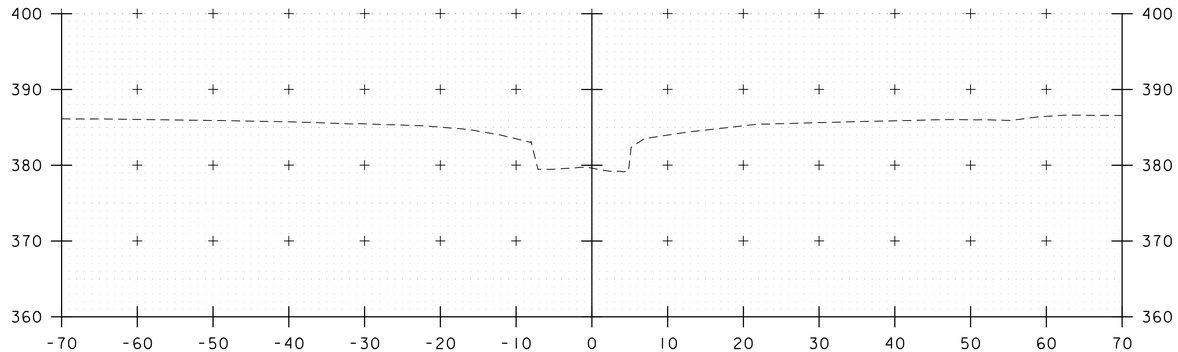

10+50

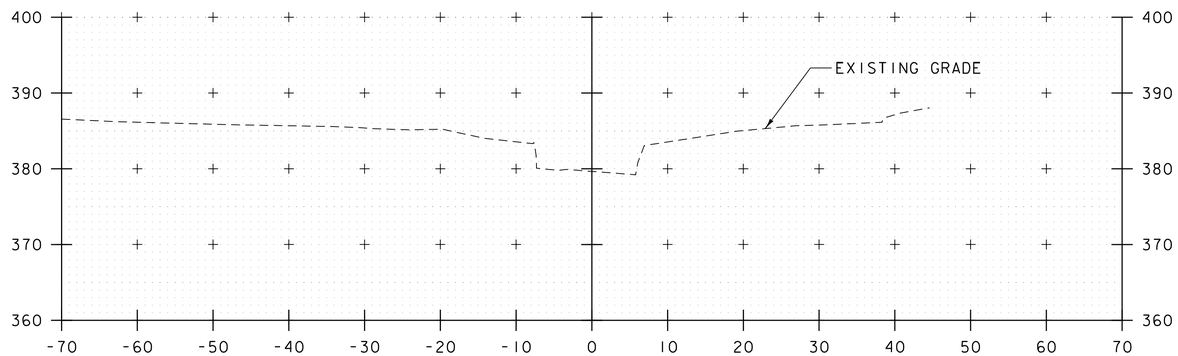

10+25

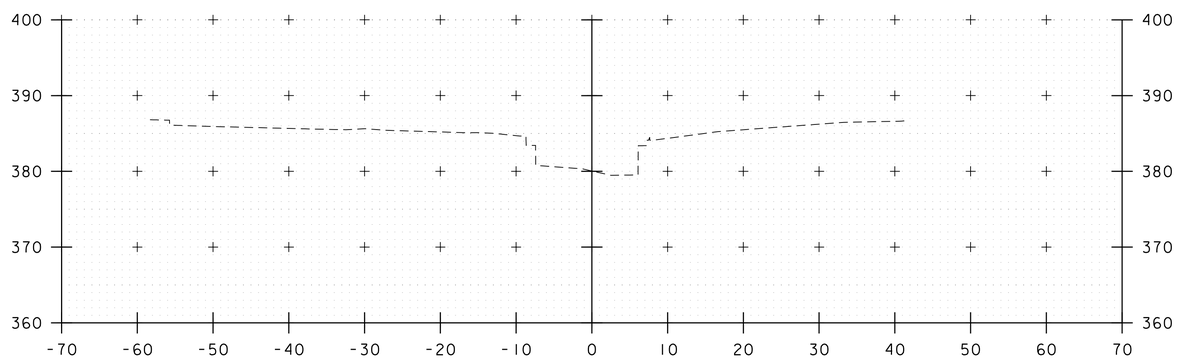

10+00

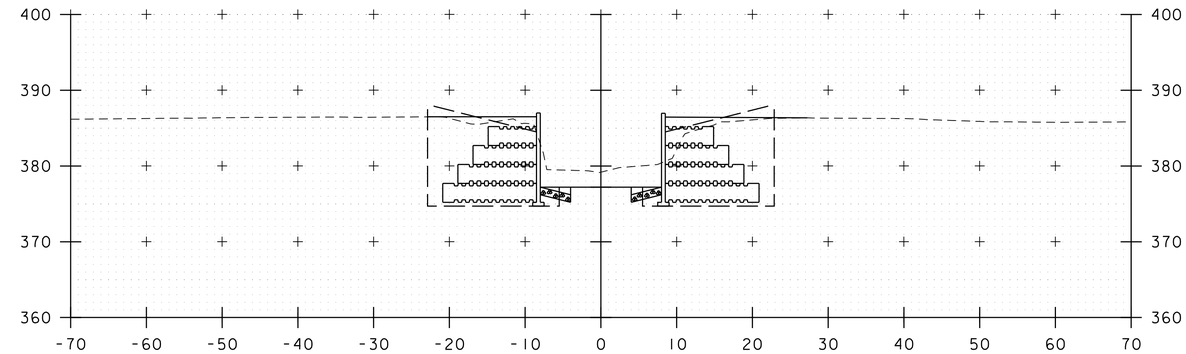

11+25

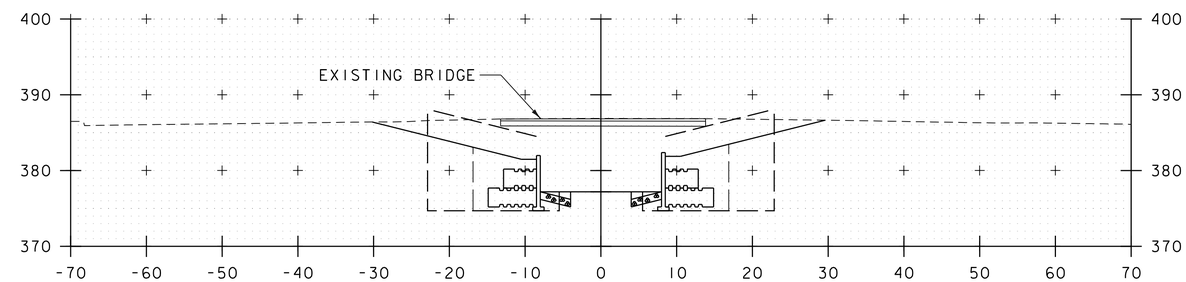

11+00

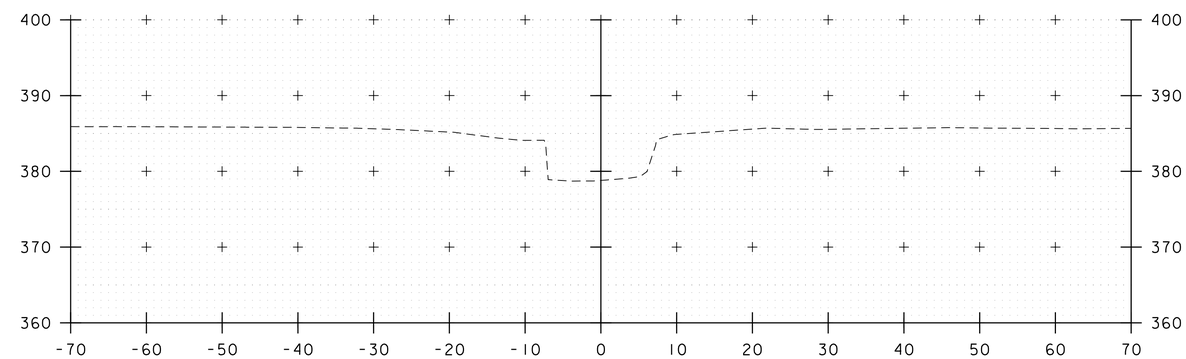

10+75

PROJECT NAME: ST. ALBANS	
PROJECT NUMBER: HPP 8000(17)	
FILE NAME: 57414_xsl.dgn	PLOT DATE: 3/4/2016
PROJECT LEADER: J. D. SALADINO	DRAWN BY: C. J. HAKEY
DESIGNED BY: S. G. FARNSWORTH	CHECKED BY:
CHANNEL CROSS SECTIONS	SHEET 229 OF 230

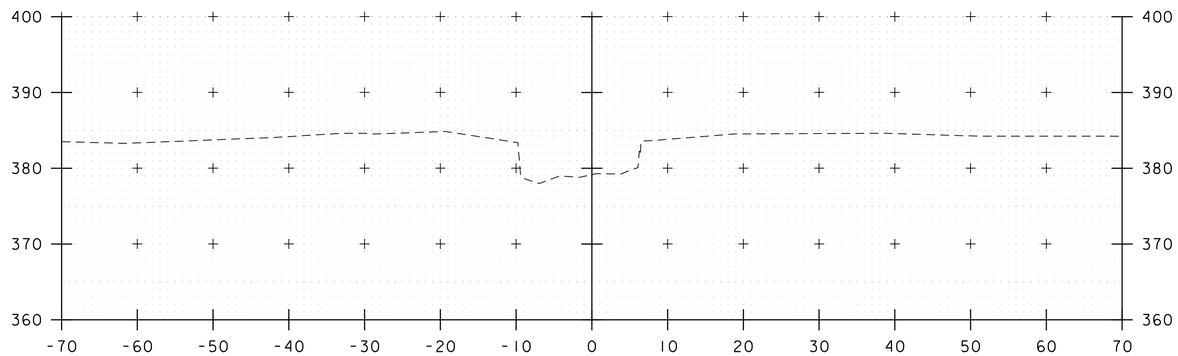

12+00

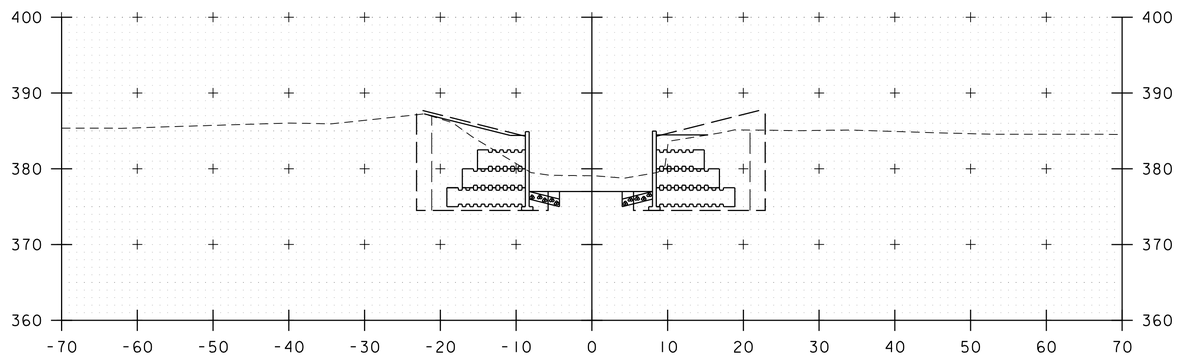

11+75

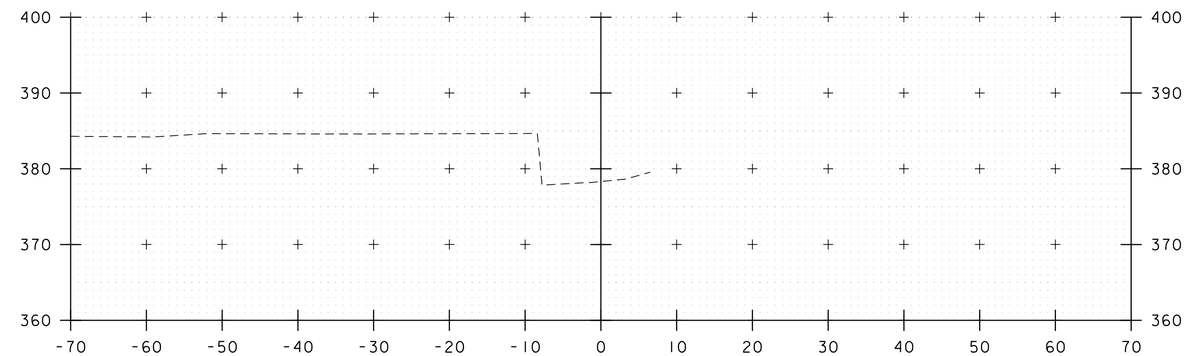

12+30

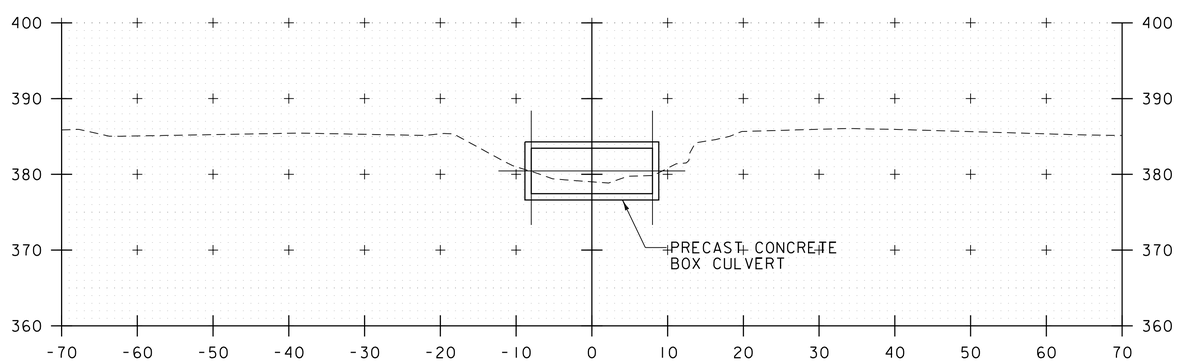

11+50

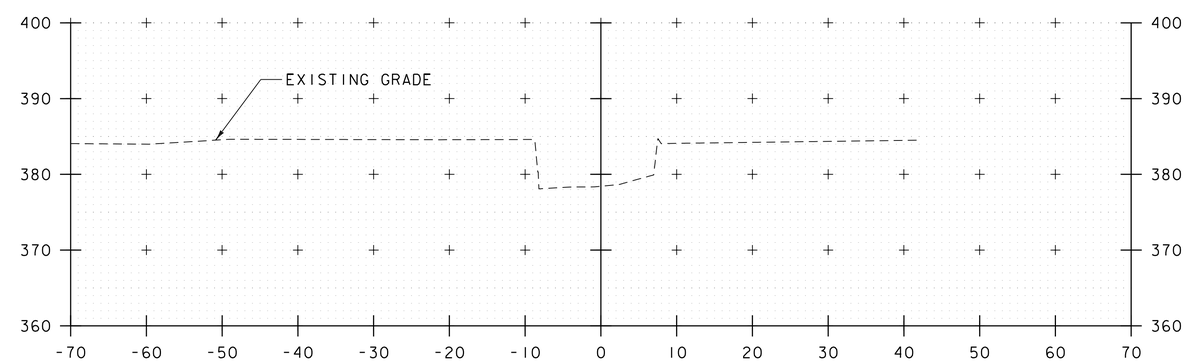

12+25

PROJECT NAME: ST. ALBANS	
PROJECT NUMBER: HPP 8000(17)	
FILE NAME: 57414_xsl.dgn	PLOT DATE: 3/4/2016
PROJECT LEADER: J. D. SALADINO	DRAWN BY: C. J. HAKEY
DESIGNED BY: S. G. FARNSWORTH	CHECKED BY:
CHANNEL CROSS SECTIONS	SHEET 230 OF 230

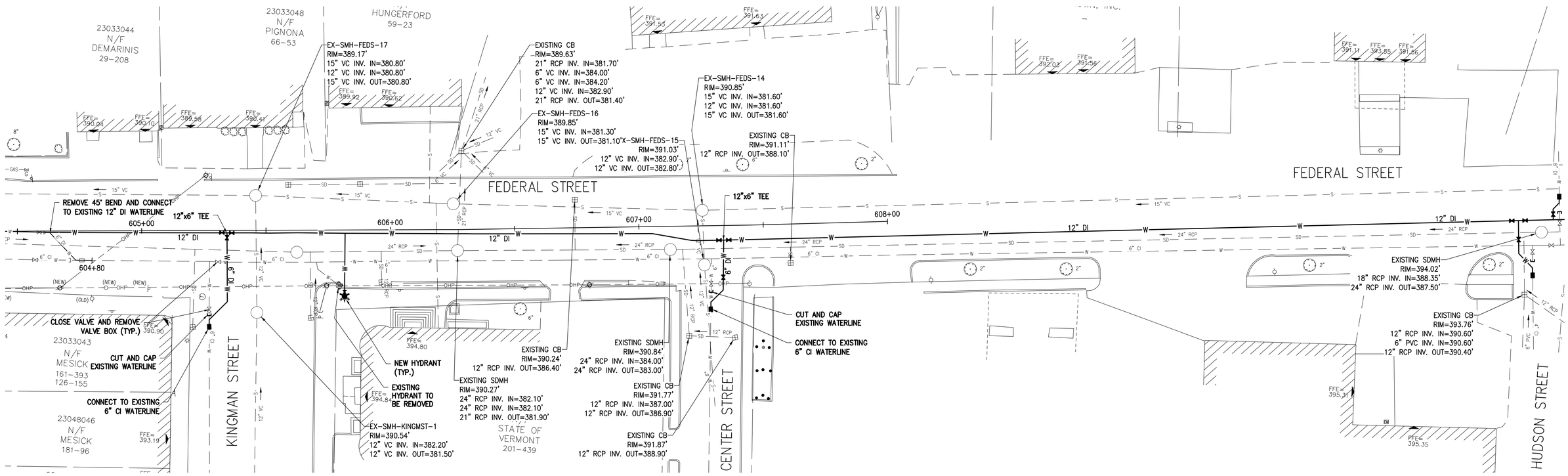

PLAN
SCALE: 1"=20'

GRAPHIC SCALE
0 20 30 40
(IN FEET)

Remaining sheets to be included must be added & annotated on index of sheets

PROJECT NAME: ST. ALBANS	
PROJECT NUMBER: HPP 8000(17)	
FILE NAME: 13091-ST ALBANS-ADDITIONAL	PLOT DATE: 02-02-16
PROJECT LEADER: M.A. COLGAN	DRAWN BY: JEB
DESIGNED BY: J BOOTH	CHECKED BY: M.J. SERVETAS
FEDERAL STREET	SHEET – OF –

Y:\13091-ST ALBANS\FEDERAL TO LOWER NEWTON\13091-5-TO LOWER NEWTON.dwg, 2/2/2016 8:39:17 AM

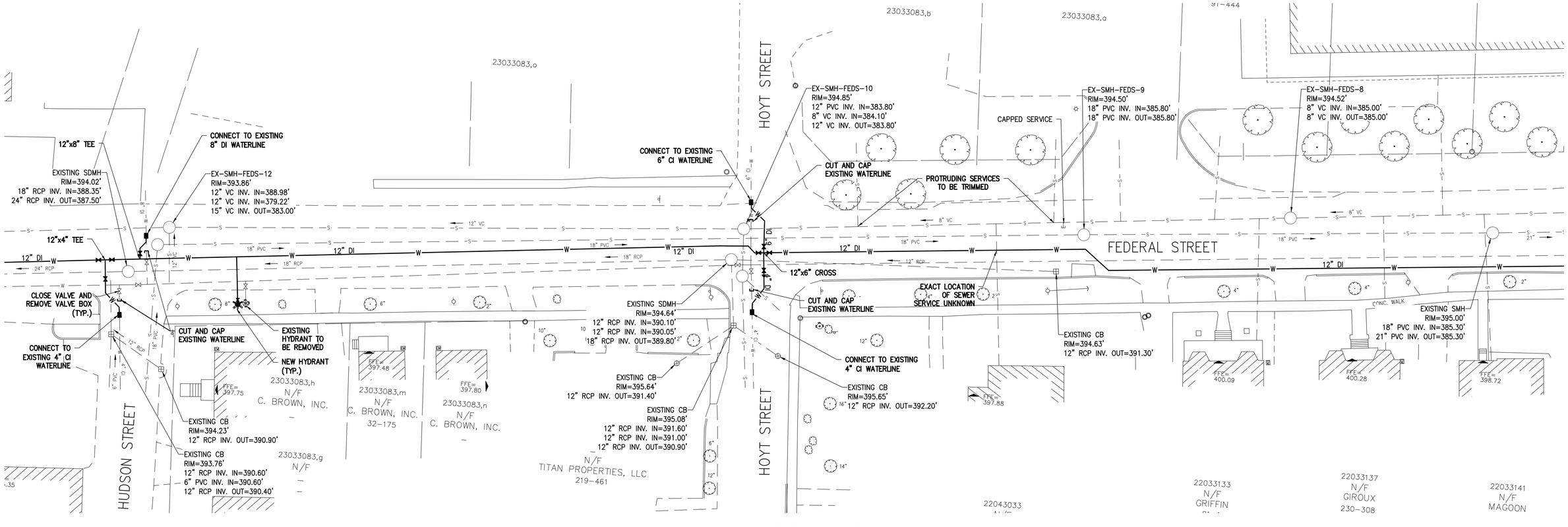

PLAN
SCALE: 1"=20'

GRAPHIC SCALE
0 20 30 40
(IN FEET)

PROJECT NAME: ST. ALBANS	
PROJECT NUMBER: HPP 8000(17)	
FILE NAME: 13091-ST ALBANS-ADDITIONAL	PLOT DATE: 02-02-16
PROJECT LEADER: M.A. COLGAN	DRAWN BY: JEB
DESIGNED BY: J BOOTH	CHECKED BY: M.J. SERVETAS
FEDERAL STREET	SHEET - OF -

Y:\13091-ST ALBANS\FEDERAL TO LOWER NEWTON\13091-6-TO LOWER NEWTON.dwg, 2/2/2016 8:46:02 AM

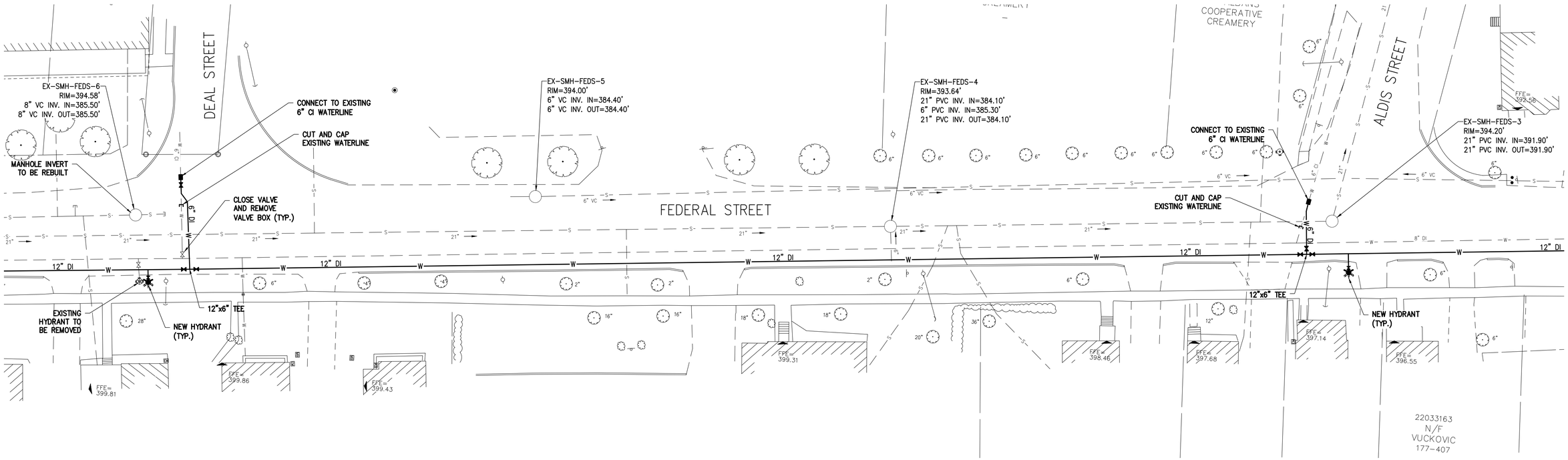

PLAN
SCALE: 1"=20'

GRAPHIC SCALE
0 20 30 40
(IN FEET)

PROJECT NAME: ST. ALBANS	
PROJECT NUMBER: HPP 8000(17)	
FILE NAME: 13091-ST ALBANS-ADDITIONAL	PLOT DATE: 02-02-16
PROJECT LEADER: M.A. COLGAN	DRAWN BY: JEB
DESIGNED BY: J BOOTH	CHECKED BY: M.J. SERVETAS
FEDERAL STREET	SHEET – OF –

Y:\13091-ST ALBANS\FEDERAL TO LOWER NEWTON\13091-7-TO LOWER NEWTON.dwg, 2/2/2016 8:50:18 AM

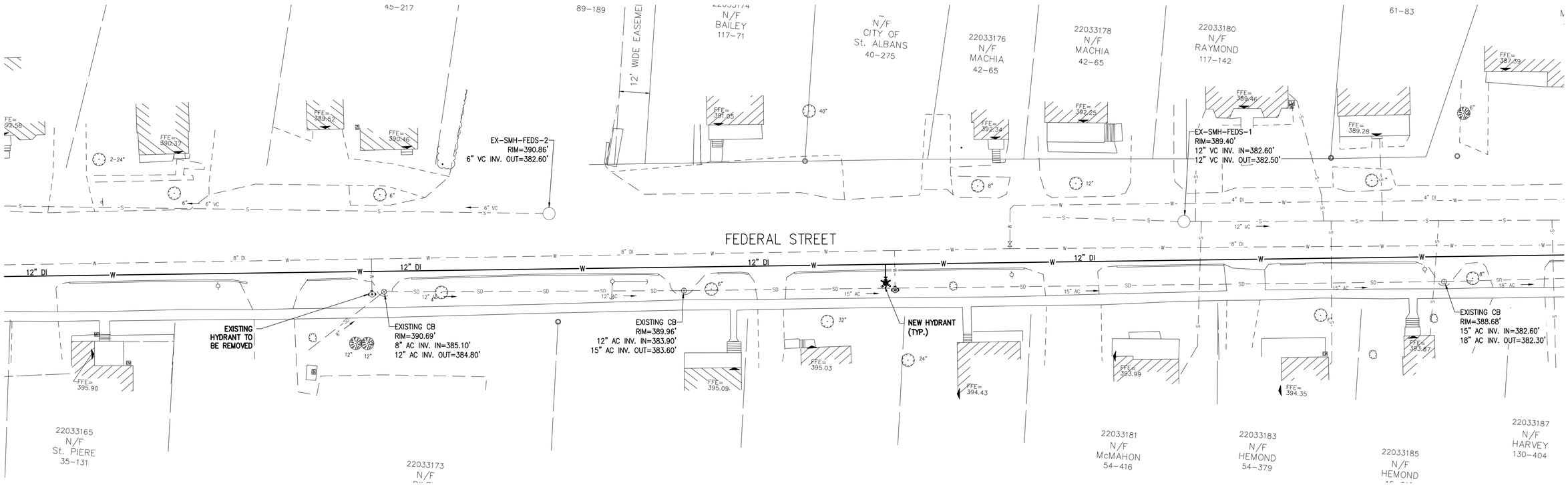

PLAN
SCALE: 1"=20'

GRAPHIC SCALE
0 20 30 40
(IN FEET)

PROJECT NAME: ST. ALBANS	
PROJECT NUMBER: HPP 8000(17)	
FILE NAME: 13091-ST ALBANS-ADDITIONAL	PLOT DATE: 02-02-16
PROJECT LEADER: M.A. COLGAN	DRAWN BY: JEB
DESIGNED BY: J BOOTH	CHECKED BY: M.J. SERVETAS
FEDERAL STREET	SHEET – OF –

Y:\13091-ST ALBANS\FEDERAL TO LOWER NEWTON\13091-8-TO LOWER NEWTON.dwg, 2/2/2016 8:52:54 AM

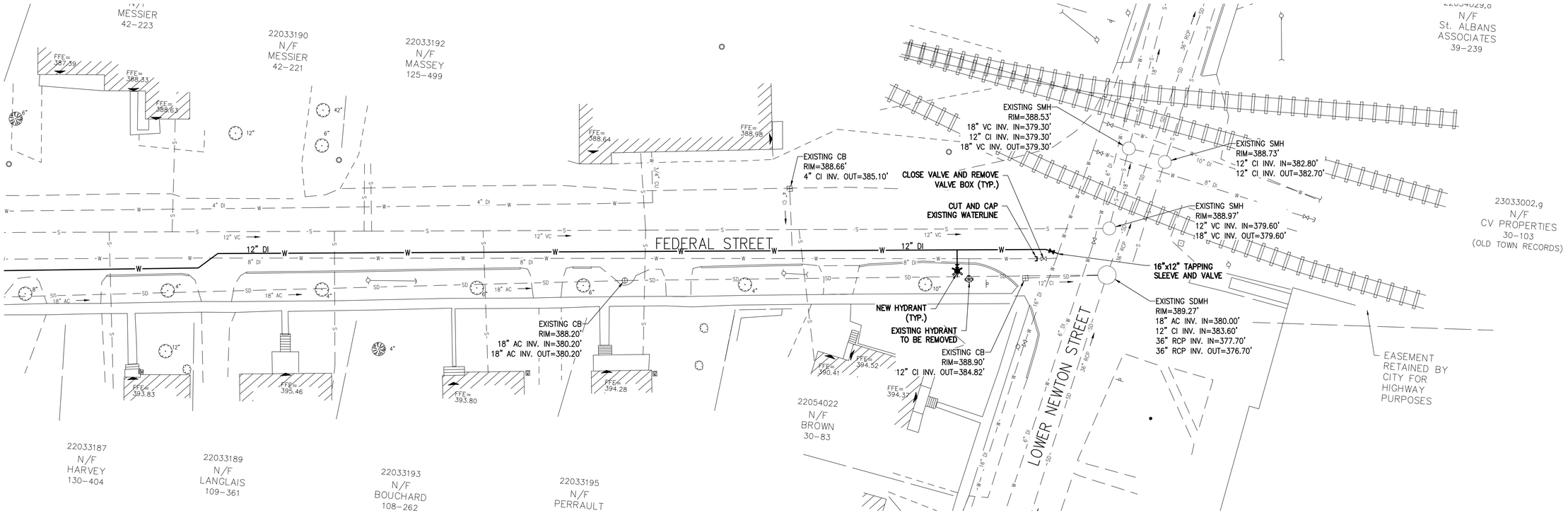

PLAN
SCALE: 1"=20'

GRAPHIC SCALE

0 20 30 40

(IN FEET)

PROJECT NAME: ST. ALBANS	
PROJECT NUMBER: HPP 8000(17)	
FILE NAME: 13091-ST ALBANS-ADDITIONAL	PLOT DATE: 02-02-16
PROJECT LEADER: M.A. COLGAN	DRAWN BY: JEB
DESIGNED BY: J BOOTH	CHECKED BY: M.J. SERVETAS
FEDERAL STREET	SHEET – OF –

Y:\13091-ST ALBANS\FEDERAL TO LOWER NEWTON\13091-9-TO LOWER NEWTON.dwg, 2/2/2016 8:57:57 AM

Care should be taken so as corner sight visibility is not obstructed by vegetation that is being proposed.

PLANT LIST

KEY	BOTANICAL NAME	COMMON NAME	QTY.	SIZE	REMARKS
TREES:					
AR	Acer rubrum 'Armstrong'	Red Maple	15	3-3.5" Cal.	B&B, 6' Branching Ht. (Min.)
BN	Betula nigra 'Heritage'	River Birch	3	12-15' Tall	B&B, Multi Stem
GB	Ginkgo Biloba 'Halka'	Halka Gingko	27	3-3.5" Cal.	B&B, 6' Branching Ht. (Min.)
MS	Malus 'Sargent'	Sargent Flowering Crab	14	2-2.5" Cal.	B&B, Full
PGa	Picea glauca	White Spruce	4	8-10'	B&B, Full
PGb	Picea glauca	White Spruce	23	6-7'	B&B, Full
QR	Quercus rubra	Northern Red Oak	28	3-3.5" Cal.	B&B, 6' Branching Ht. (Min.)
TC	Tilia cordata 'Greenspire'	Greenspire Linden	36	3-3.5" Cal.	B&B, 6' Branching Ht. (Min.)
UA	Ulmus americana 'Princeton'	Princeton American Elm	18	3-3.5" Cal.	B&B, 6' Branching Ht. (Min.)
SHRUBS:					
CS	Cornus sericea 'Arctic Fire'	Arctic Fire Red Dogwood	18	2'-2.5' ht.	C.G. Plant 36" o.c
HA	Hydrangea arborescens 'Annabelle'	Annabelle Hydrangea	31	24-30" dia.	C.G. Plant 36" o.c.
IJ	Ilex verticillata 'Jim Dandy'	Jim Dandy Winterberry	40	1.5'-2' ht.	C.G. Plant 36" o.c
IR	Ilex verticillata 'Red Sprite'	Red Sprite Winterberry	152	1.5'-2' ht.	C.G. Plant 36" o.c
PERENNIALS:					
CP	Carex pensylcania	Sedge	405	1 Gal.	C.G. Plant 18" o.c.
HS	Hemerocallis 'Stella Doro'	Stella Dora Daylily	390	1 Gal.	C.G. Plant 18" o.c.

NOTES:
1. CONTRACTOR IS RESPONSIBLE TO VERIFY ALL PLANT QUANTITIES FOUND IN THE PLANTING PLANS. IF ANY DISCREPANCIES ARE FOUND, RESIDENT ENGINEER SHOULD BE NOTIFIED IMMEDIATELY.
2. FINAL LAYOUT AND PLACEMENT OF ALL PLANT MATERIAL TO BE APPROVED BY THE RESIDENT ENGINEER.
3. CONTRACTOR IS RESPONSIBLE TO SEED ALL DISTURBED AREAS ACCORDING TO THE SPECIFICATIONS AND LAWN DETAIL
4. REFER TO PLANTING DETAILS DRAWING FOR PLANT MATERIAL INSTALLATION REQUIREMENTS.
5. IF THE LANDSCAPE CONTRACTOR PROPOSES A SUBSTITUTE PLANT SPECIES, ALL SUBSTITUTES NEED TO BE APPROVED BY THE RESIDENT ENGINEER IN WRITING PRIOR TO ORDERING.

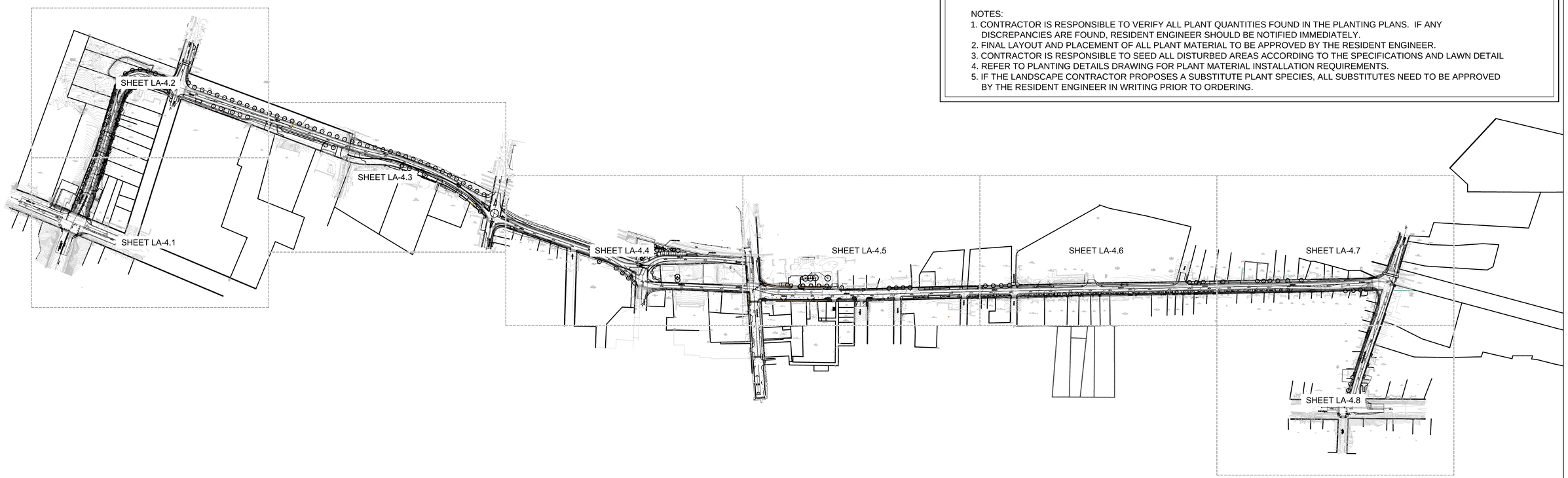

60% SUBMISSION

0 125' 250' 500'
Graphic Scale: 1"=250'-0"

SE GROUP
Landscape Architects
131 Church Street
Burlington, VT 05401
www.segroup.com

PROJECT NAME: ST. ALBANS
PROJECT NUMBER: HPP 8000(17)

FILE NAME:
PROJECT LEADER: MKW
DESIGNED BY: MKW
OVERALL PLANTING PLAN

PLOT DATE: 02/19/2016
DRAWN BY: MKW, TH
CHECKED BY:
SHEET LA-4.0

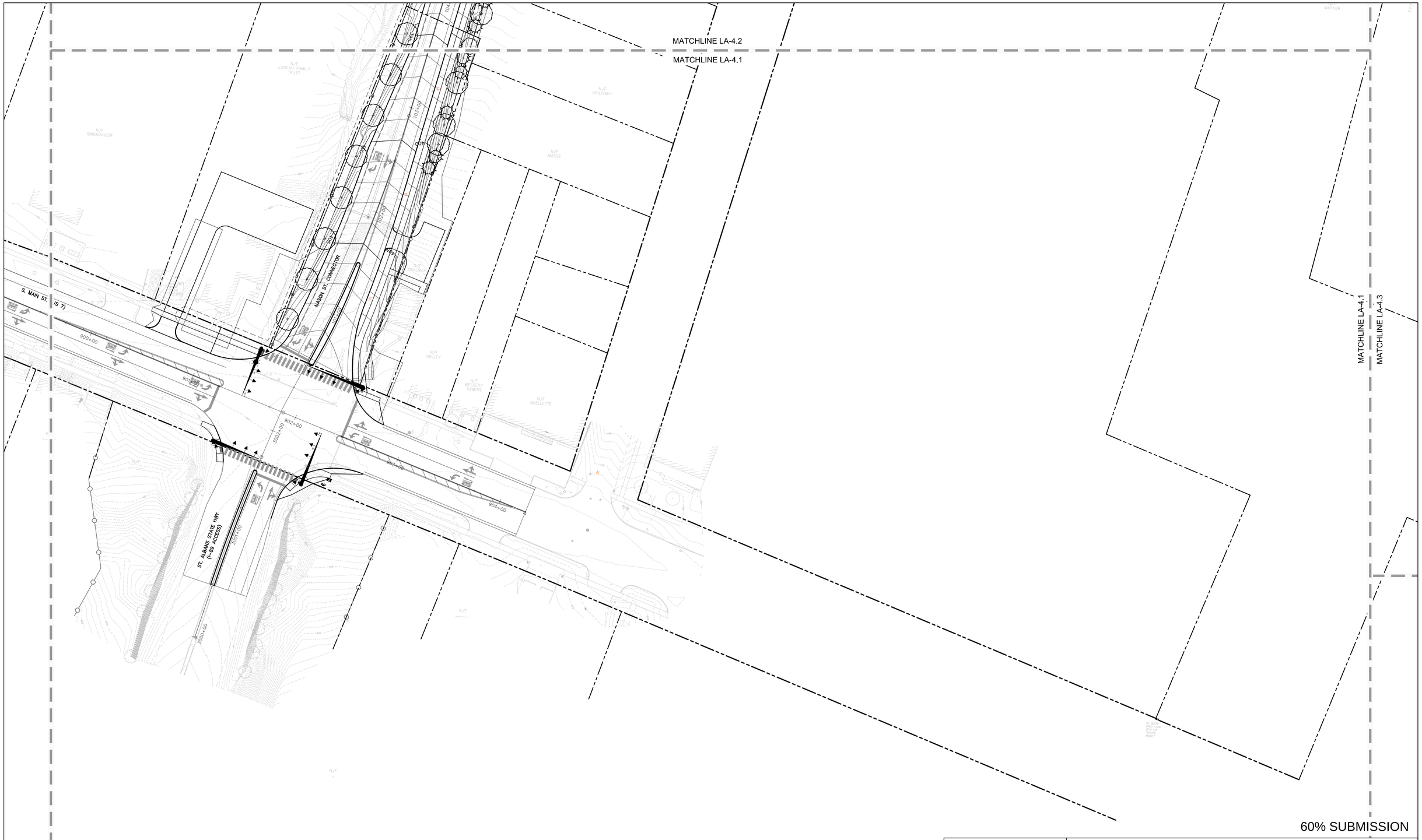

60% SUBMISSION

0 20' 40' 80'

Graphic Scale: 1"=40'-0"

SE GROUP

Landscape Architects
131 Church Street
Burlington, VT 05401
www.segroup.com

PROJECT NAME:	ST. ALBANS		
PROJECT NUMBER:	HPP 8000(17)		
FILE NAME:		PLOT DATE:	02/19/2016
PROJECT LEADER:	MKW	DRAWN BY:	MKW, TH
DESIGNED BY:	MKW	CHECKED BY:	
PLANTING PLAN		SHEET	LA-4.1

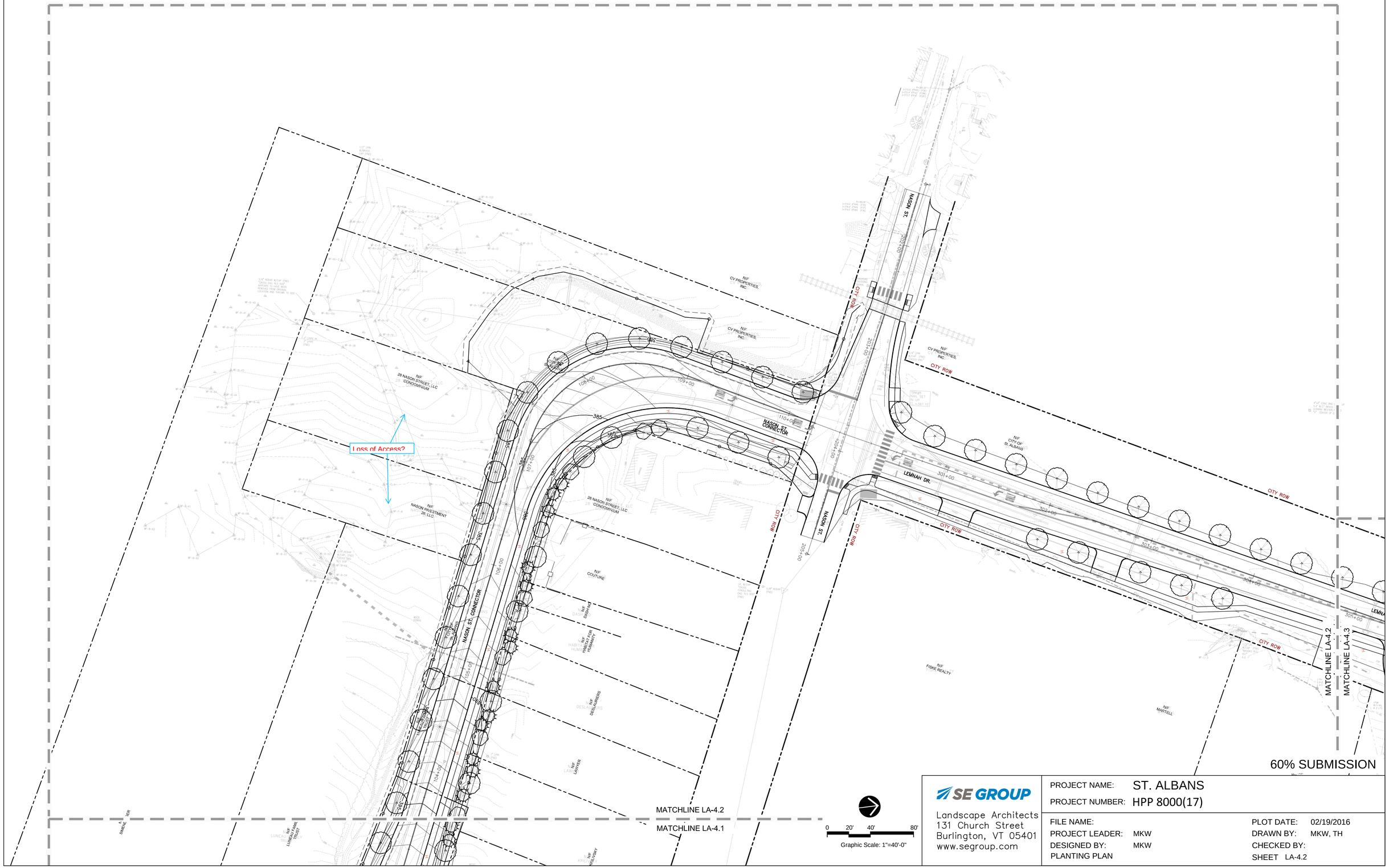
NASON ST. CONNECTOR
NASON ST.
LEMNAH DR.
CITY ROW
Loss of Access?
N/F 28 NASON STREET, LLC CONDOMINIUM
N/F CV PROPERTIES, INC.
N/F CITY OF ST. ALBANS
N/F NASON INVESTMENT 28 LLC
N/F COUTURE
N/F DASHNAW
N/F HABITAT FOR HUMANITY
N/F DESJARDINS
N/F LAWYER
N/F FISKE REALTY
N/F MARTELL
N/F LUNDELL FAMILY TRUST
N/F KIRKLEVSKY
MATCHLINE LA-4.2
MATCHLINE LA-4.1
MATCHLINE LA-4.3
60% SUBMISSION
Graphic Scale: 1"=40'-0"
SE GROUP
Landscape Architects
131 Church Street
Burlington, VT 05401
www.segroup.com
PROJECT NAME: ST. ALBANS
PROJECT NUMBER: HPP 8000(17)
FILE NAME:
PROJECT LEADER: MKW
DESIGNED BY: MKW
PLANTING PLAN
PLOT DATE: 02/19/2016
DRAWN BY: MKW, TH
CHECKED BY:
SHEET LA-4.2

SE GROUP
Landscape Architects
131 Church Street
Burlington, VT 05401
www.segroup.com

PROJECT NAME:	ST. ALBANS		
PROJECT NUMBER:	HPP 8000(17)		
FILE NAME:		PLOT DATE:	02/19/2016
PROJECT LEADER:	MKW	DRAWN BY:	MKW, TH
DESIGNED BY:	MKW	CHECKED BY:	
PLANTING PLAN		SHEET	LA-4.3

MATCHLINE LA-4.3

MATCHLINE LA-4.4

MATCHLINE LA-4.5

ALLEN ST.

MARKET ST.

CATHERINE ST.

STOWELL ST.

STEBBINS ST.

CITY ROW

CHAIN LINK FENCE

BEGIN NEW FENCE MATCH EXISTING

END NEW FENCE

GRAVEL DRIVE

PAVE LIMIT

EXISTING TREE TO REMAIN

EXISTING TREES TO REMAIN

N/F CV PROPERTIES, INC.

N/F CITY OF ST. ALBANS

N/F LABRIE

N/F GODIN

N/F BERTHIAUME

N/F BANK AMERICA

N/F LEWIS

N/F WILLARD MILL HOUSING LIMITED PARTNERSHIP

N/F B.A. GAGE, LLC

N/F BEVINS PROPERTY #3 LLC

N/F AMERICANADIAN, LLC

N/F LAPIERRE CONSTRUCTION & DEVELOPMENT

N/F BLOUIN

N/F WHITE

N/F ST. ALBANS HOTEL, INC.

NECR

60% SUBMISSION

0 20' 40' 80'

Graphic Scale: 1"=40'-0"

SE GROUP

Landscape Architects
131 Church Street
Burlington, VT 05401
www.segroup.com

PROJECT NAME:	ST. ALBANS		
PROJECT NUMBER:	HPP 8000(17)		
FILE NAME:		PLOT DATE:	02/19/2016
PROJECT LEADER:	MKW	DRAWN BY:	MKW, TH
DESIGNED BY:	MKW	CHECKED BY:	
PLANTING PLAN		SHEET	LA-4.4

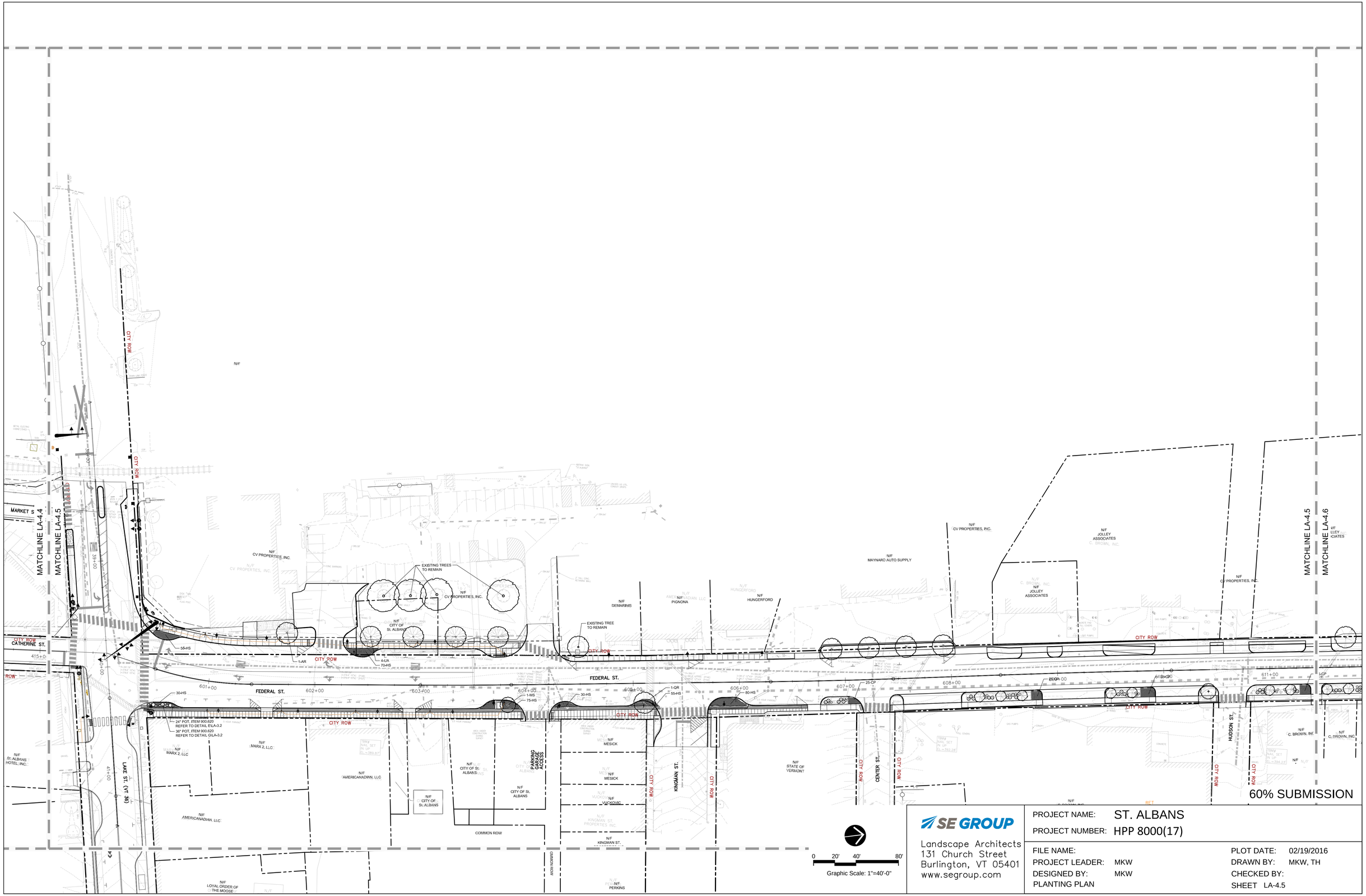

SE GROUP
Landscape Architects
131 Church Street
Burlington, VT 05401
www.segroup.com

PROJECT NAME: ST. ALBANS
PROJECT NUMBER: HPP 8000(17)

FILE NAME:
PROJECT LEADER: MKW
DESIGNED BY: MKW
PLANTING PLAN

PLOT DATE: 02/19/2016
DRAWN BY: MKW, TH
CHECKED BY:
SHEET LA-4.5

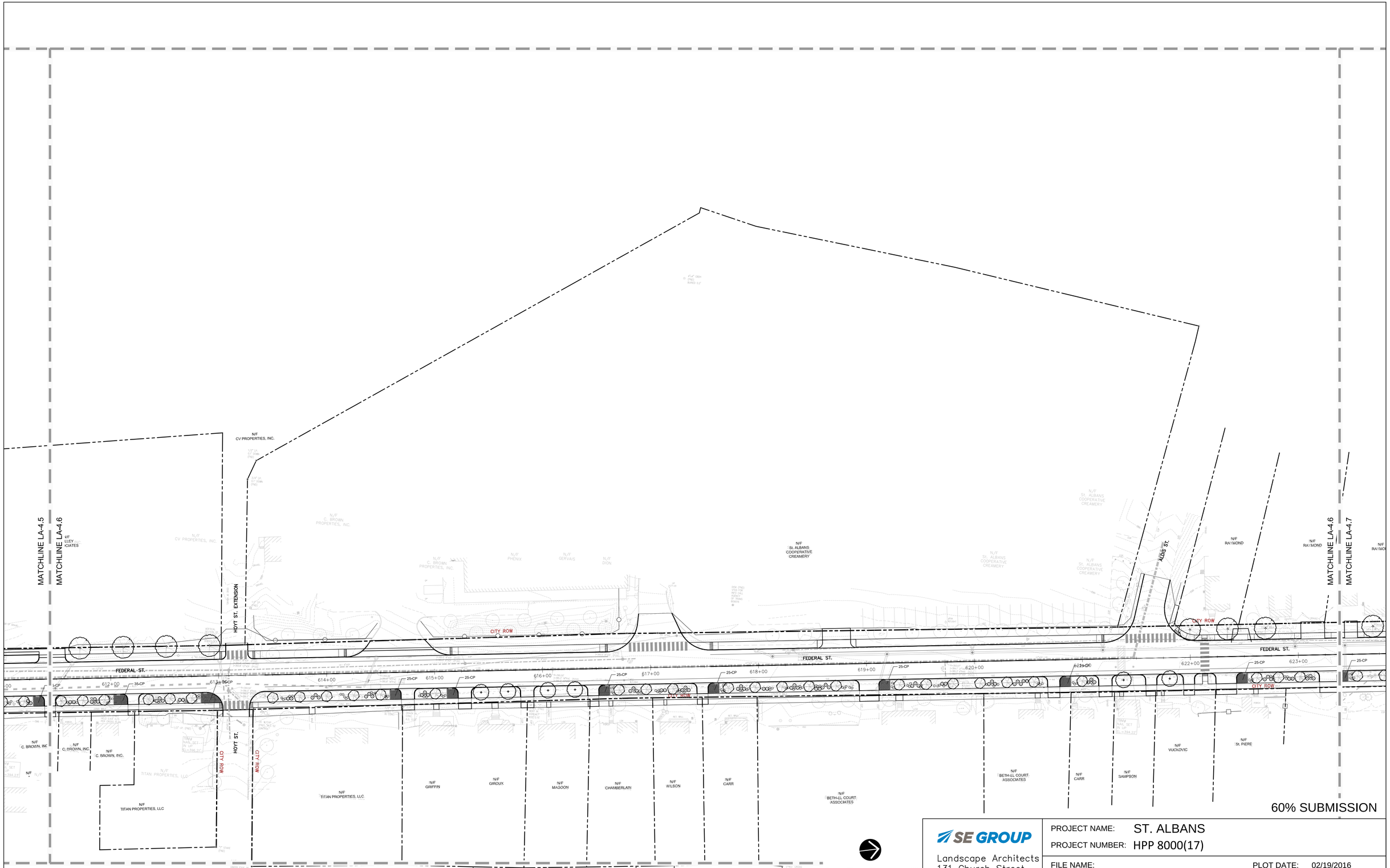

SE GROUP
Landscape Architects
131 Church Street
Burlington, VT 05401
www.segroup.com

PROJECT NAME: ST. ALBANS
PROJECT NUMBER: HPP 8000(17)

FILE NAME:
PROJECT LEADER: MKW
DESIGNED BY: MKW
PLANTING PLAN

PLOT DATE: 02/19/2016
DRAWN BY: MKW, TH
CHECKED BY:
SHEET LA-4.6

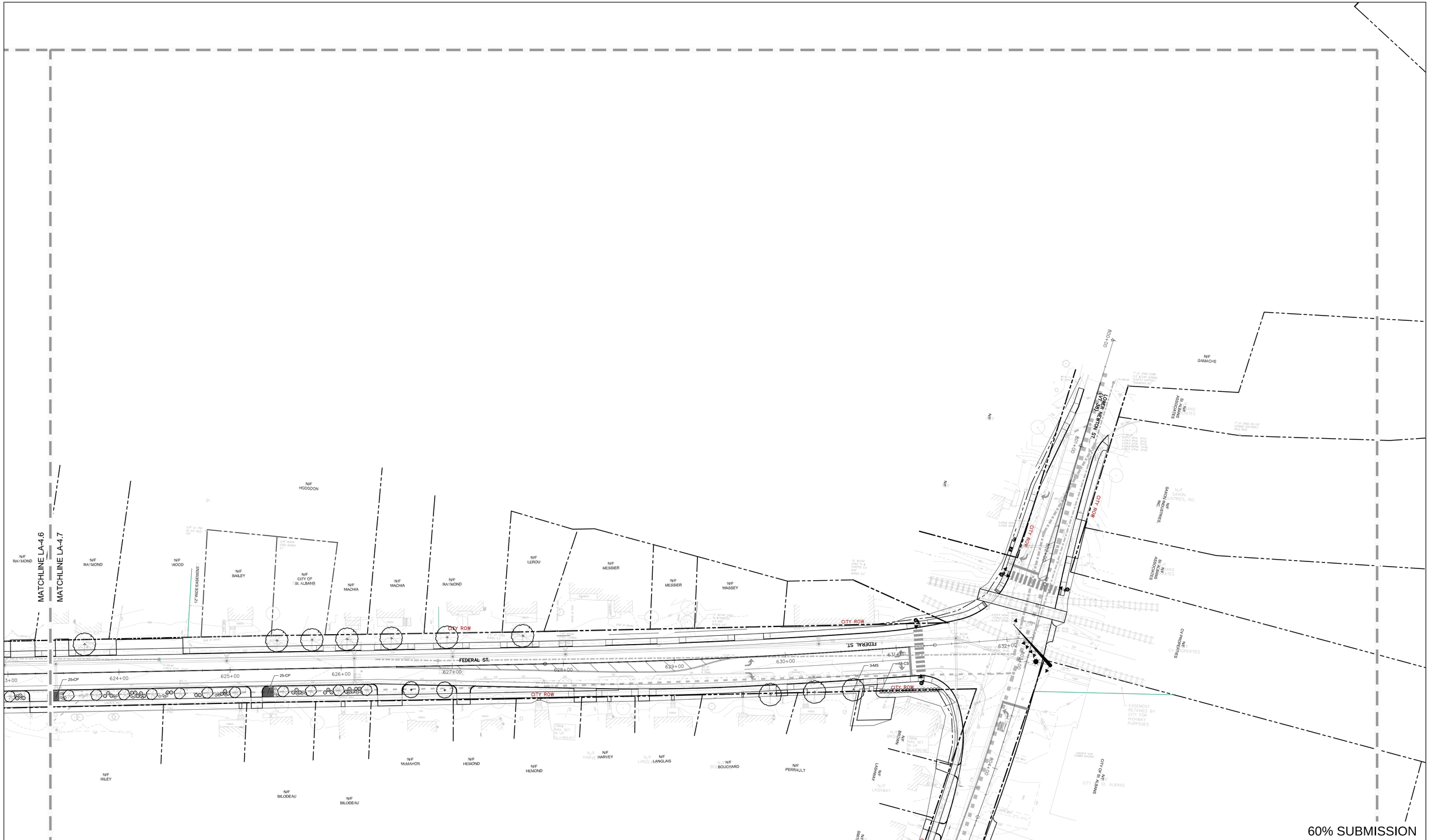

60% SUBMISSION

SE GROUP
Landscape Architects
131 Church Street
Burlington, VT 05401
www.segroup.com

PROJECT NAME:	ST. ALBANS		
PROJECT NUMBER:	HPP 8000(17)		
FILE NAME:		PLOT DATE:	02/19/2016
PROJECT LEADER:	MKW	DRAWN BY:	MKW, TH
DESIGNED BY:	MKW	CHECKED BY:	
PLANTING PLAN		SHEET	LA-4.7

MATCHLINE LA-4.7

MATCHLINE LA-4.8

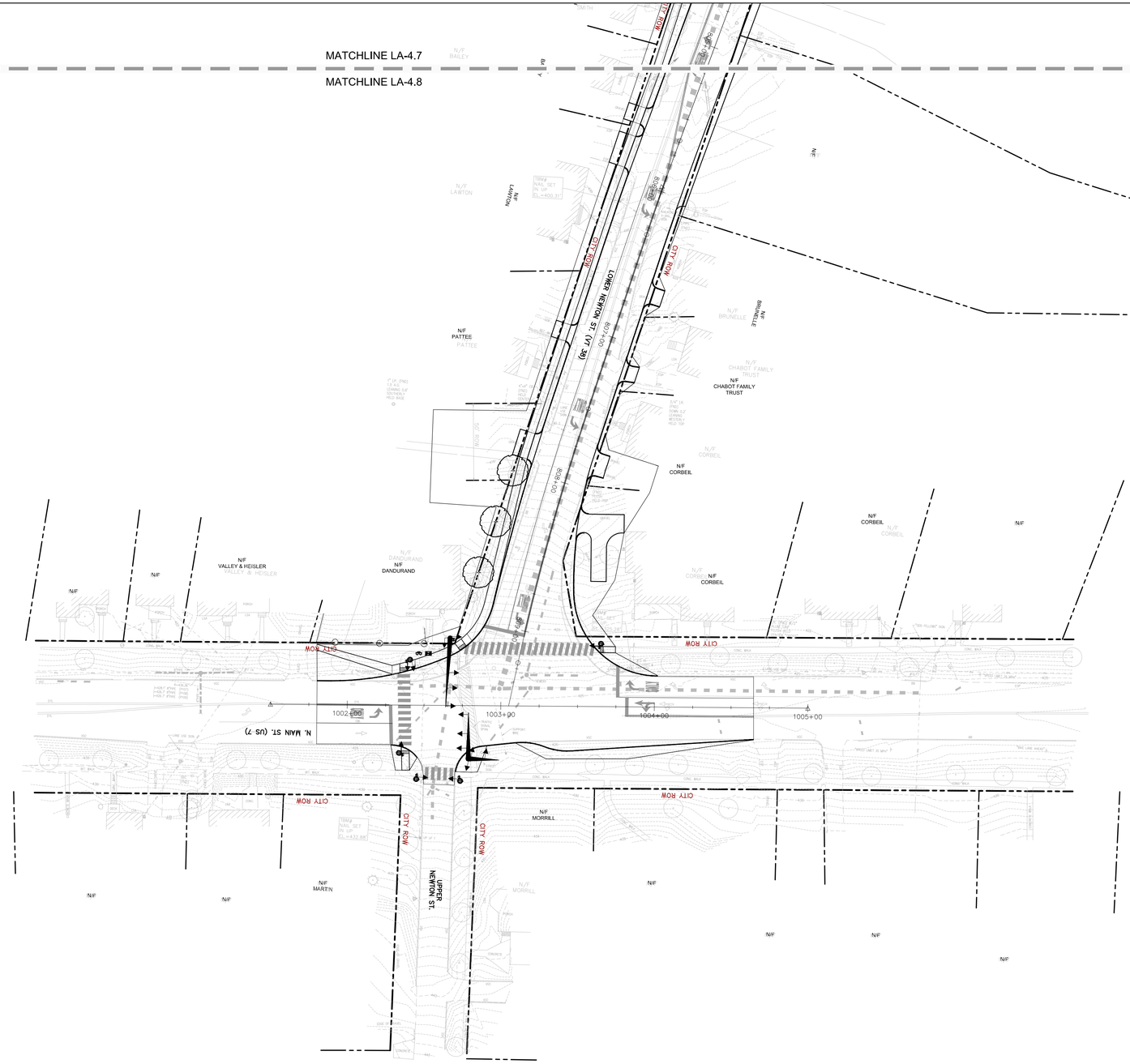

60% SUBMISSION

0 20' 40' 80'

Graphic Scale: 1"=40'-0"

SE GROUP

Landscape Architects
131 Church Street
Burlington, VT 05401
www.segroup.com

PROJECT NAME: ST. ALBANS

PROJECT NUMBER: HPP 8000(17)

FILE NAME:

PROJECT LEADER: MKW

DESIGNED BY: MKW

PLANTING PLAN

PLOT DATE: 02/19/2016

DRAWN BY: MKW, TH

CHECKED BY:

SHEET LA-4.8

SPACING "D"	ROW "A"	NUMBER OF PLANTS/SQ.FT.
36" O.C.	31.20"	0.125
30" O.C.	26.00"	0.180
24" O.C.	20.76"	0.281
12" O.C.	10.44"	1.125
10" O.C.	8.64"	1.660
8" O.C.	6.96"	2.600
6" O.C.	5.16"	4.610

NOTE:
1. PLANT QUANTITIES DETERMINED BY MULTIPLYING AREA (SQ. FT.) BY NUMBER OF PLANTS/SQ. FT. FOR REQUIRED SPACING.
2. CONTINUOUS PLANTING PITS FILLED WITH LANDSCAPE BACKFILL PER THE DEPTH AS NOTED IN THE SPECIFICATIONS IS REQUIRED.

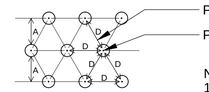

PLANT SPACING

PLANT CENTER

NOTES:
1. SEE PLANTING PLAN FOR SPACING AND QUANTITIES
2. SEE PLANTING LIST FOR PLANT SPACING

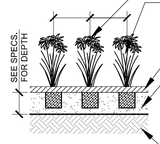

SET AT ORIGINAL PLANTING DEPTH

PERENNIALS, ITEM 656.41

HEMLOCK BARK MULCH, ITEM 900.608

CONTINUOUS PLANTING PIT BACKFILL MIX FOR PERENNIAL PLANTING BEDS, REFER TO SPECS S.P. SOIL PREPARATION 900.608 PAID UNDER LANDSCAPE BACKFILL, ITEM 900.608

SUB GRADE

C PERENNIAL PLANTING

SCALE: 1/2" = 1'-0" p-perennial.dwg

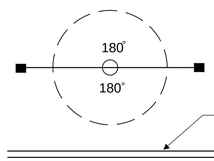

ALIGN STAKES PARALLEL W/ ROAD OR WALKS

EDGE OF WALK OR CURB

A. TREE STAKING ALONG ROAD OR WALKS

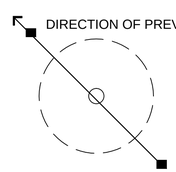

DIRECTION OF PREVAILING WIND

ALIGN STAKES PARALLEL W/ DIRECTION OF PREVAILING WIND. ALL STAKES TO BE CONSISTENT.

B. TREE STAKING IN OPEN SPACES

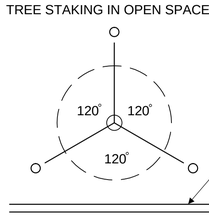

3" CALIPER TREES OR LARGER - ALIGN 2 STAKES PARALLEL W/ ROAD OR WALKS

EDGE OF WALK OR CURB

C. TREE GUYING

D TREE STAKING LAYOUT

INCIDENTAL TO DECIDUOUS TREES, ITEM 656.30

NO SCALE p-stake.dwg

NOTE: EXAMINE ENTIRE TREE AND REMOVE ALL NURSERY TAGS, ROPE, STRING, OR SURVEYORS TAPE TO PREVENT FUTURE GIRDLING.

SURROUNDING SOIL SHOULD NOT EXCEED 80% COMPACTION, DRAINAGE WILL BE REQUIRED IF COMPACTED SOILS ARE PRESENT

NYLON STRAP WITH 3/4" GROMMETS, REFER TO SPECIFICATIONS INCIDENTAL TO DECIDUOUS TREES, ITEM 656.30

FASTEN WIRE BELOW POINT OF MAJOR BRANCHING OR TO MAJOR OUTSIDE TRUNK.

2 ½" HARDWOOD STAKES. ALIGN STAKES PARALLEL W/ ROAD/ WALKS OR PARALLEL W/ DIRECTION OF PREVAILING WIND, REFER TO TREE STAKING DETAIL INCIDENTAL TO DECIDUOS TREES, ITEM 656.30

TEMPORARY WATERING BASIN MADE FROM SOIL

BREAK APART EDGE OF EXCAVATION W/ SHOVEL AND BLEND PLANT MIX W/ EXISTING SOIL TO PROVIDE TRANSITION TO UNDISTURBED GRADE

UNDISTURBED GRADE EXCAVATE ONLY TO SPECIFIED PLANTING DEPTH TO ENSURE STABLE BASE

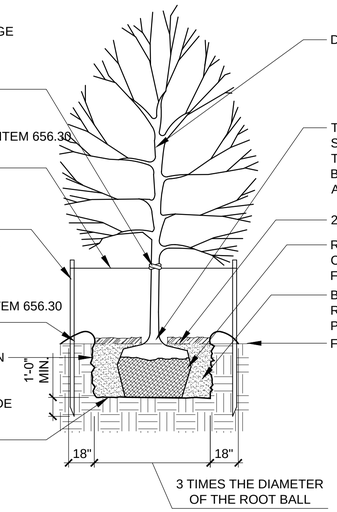

DECIDUOUS TREES, ITEM 656.30

TOP OF ROOTBALL, ROOT FLARE / MAIN ORDER ROOT SHOULD BE EVIDENT. IF ROOT FLARE IS NOT EVIDENT, THEN SCRAPE OFF THE TOP LAYER OF SOIL BUILD UP ON TOP OF ROOTBALL FROM NURSERY AND PLANT ROOTBALL AT PROPER DEPTH.

2" HEMLOCK BARK MULCH, ITEM 900.608

REMOVE TOP HALF OF WIRE CAGE CUT AND REMOVE BURLAP FROM ROOTBALL

BACKFILL MIX FOR TREE PLANTING BEDS, REFER TO SPECS S.P. SOIL PREPARATION 900.608 PAID UNDER LANDSCAPE BACKFILL, ITEM 900.608

FINISH GRADE

3 TIMES THE DIAMETER OF THE ROOT BALL

A TREE PLANTING

SCALE 1/4" = 1'-0" p-decidtree.dwg

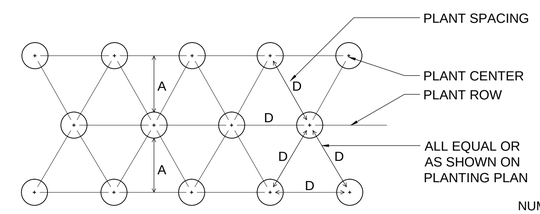

PLANT SPACING

PLANT CENTER

PLANT ROW

ALL EQUAL OR AS SHOWN ON PLANTING PLAN

SPACING "D"	ROW "A"	NUMBER OF PLANTS/SQ. FT.
5' O.C.	51.96"	0.04
4' O.C.	41.52"	0.07
36" O.C.	31.20"	0.12
30" O.C.	26.00"	0.18
24" O.C.	20.76"	0.28

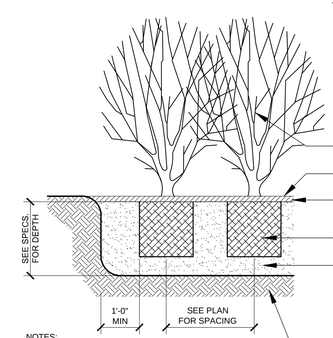

SHRUBS, ITEM 656.35

FINISH GRADE

HEMLOCK BARK MULCH, ITEM 900.608 REFER TO SPECIFICATIONS

SHRUB ROOTBALL

CONTINUOUS PLANTING PIT BACKFILL MIX FOR SHRUB PLANTING BEDS, REFER TO SPECS S.P. SOIL PREPARATION 900.608 PAID UNDER LANDSCAPE BACKFILL, ITEM 900.608

SUB GRADE

NOTES:
1. QUANTITY OF SHRUBS AND SPACING AS NOTED IN PLANTING SCHEDULE.
2. CONTINUOUS PLANTING PITS FILLED WITH PLANTING MIX PER THE DEPTH AS NOTED IN THE SPECIFICATIONS IS REQUIRED.

B SHRUB PLANTING

SCALE: 1/2" = 1'-0"

60% SUBMISSION

SE GROUP
Landscape Architects
131 Church Street
Burlington, VT 05401
www.segroup.com

PROJECT NAME: ST. ALBANS
PROJECT NUMBER: HPP 8000(17)

FILE NAME:
PROJECT LEADER: MKW
DESIGNED BY: MKW
LANDSCAPE PLANTING DETAILS

PLOT DATE: 02/19/2016
DRAWN BY: MKW, TH
CHECKED BY:
SHEET LA-4.9

FIXTURE AND POLE SPECIFICATIONS

Fixture A -ORNAMENTAL STREET LIGHT Configuration: Single Fixture Quantity: 17	
Fixture B - (**The non ornamental LED**) Configuration: xxx Quantity: xxx	

NOTES:
1. CONTRACTOR IS RESPONSIBLE TO VERIFY ALL LIGHT FIXTURE AND POLE QUANTITIES FOUND IN THE LIGHTING PLANS. IF ANY DISCREPANCIES ARE FOUND, RESIDENT ENGINEER SHOULD BE NOTIFIED IMMEDIATELY.
2. FIXTURE A - REFER TO SPECIAL PROVISIONS "ORNAMENTAL STREET LIGHT" FOR SPECIFICATIONS.
3. FIXTURE B - REFER TO SPECIAL PROVISIONS xxxxxx
4. REFER TO LIGHT FIXTURE DETAILS ON LA-5.1-5.2 FOR FIXTURE AND POLE CONFIGURATIONS WITH BANNER ARMS AND PLANT HANGERS.
5. CONTRACTOR TO PROVIDE SHOP DRAWINGS FOR REVIEW AND APPROVAL BY RESIDENT ENGINEER.
6. REFER TO GENERAL PLANS BY VHB FOR LIGHTING CONDUIT LAYOUT, AND DETAILS BY ALDRICH AND ELLIOT FOR POWER SUPPLY DETAILS.

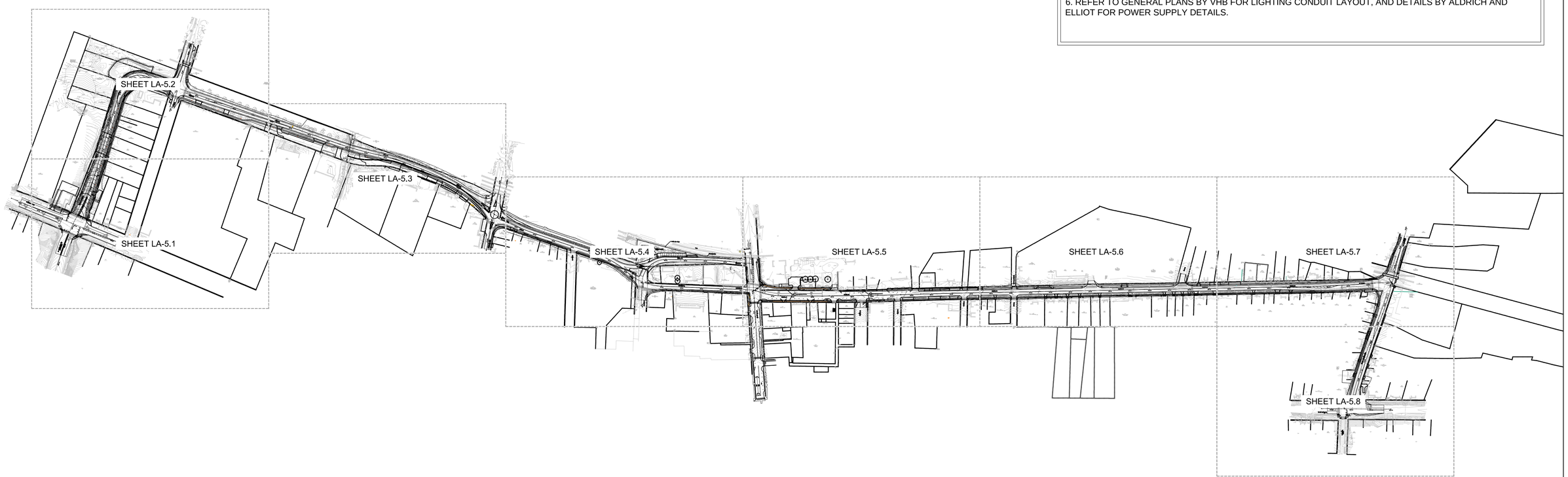

60% SUBMISSION

0 125' 250' 500'
Graphic Scale: 1"=250'-0"

SE GROUP
Landscape Architects
131 Church Street
Burlington, VT 05401
www.segroup.com

PROJECT NAME: ST. ALBANS
PROJECT NUMBER: HPP 8000(17)

FILE NAME:
PROJECT LEADER: MKW
DESIGNED BY: MKW
OVERALL LIGHTING PLAN

PLOT DATE: 02/19/2016
DRAWN BY: MKW, TH
CHECKED BY:
SHEET LA-5.0

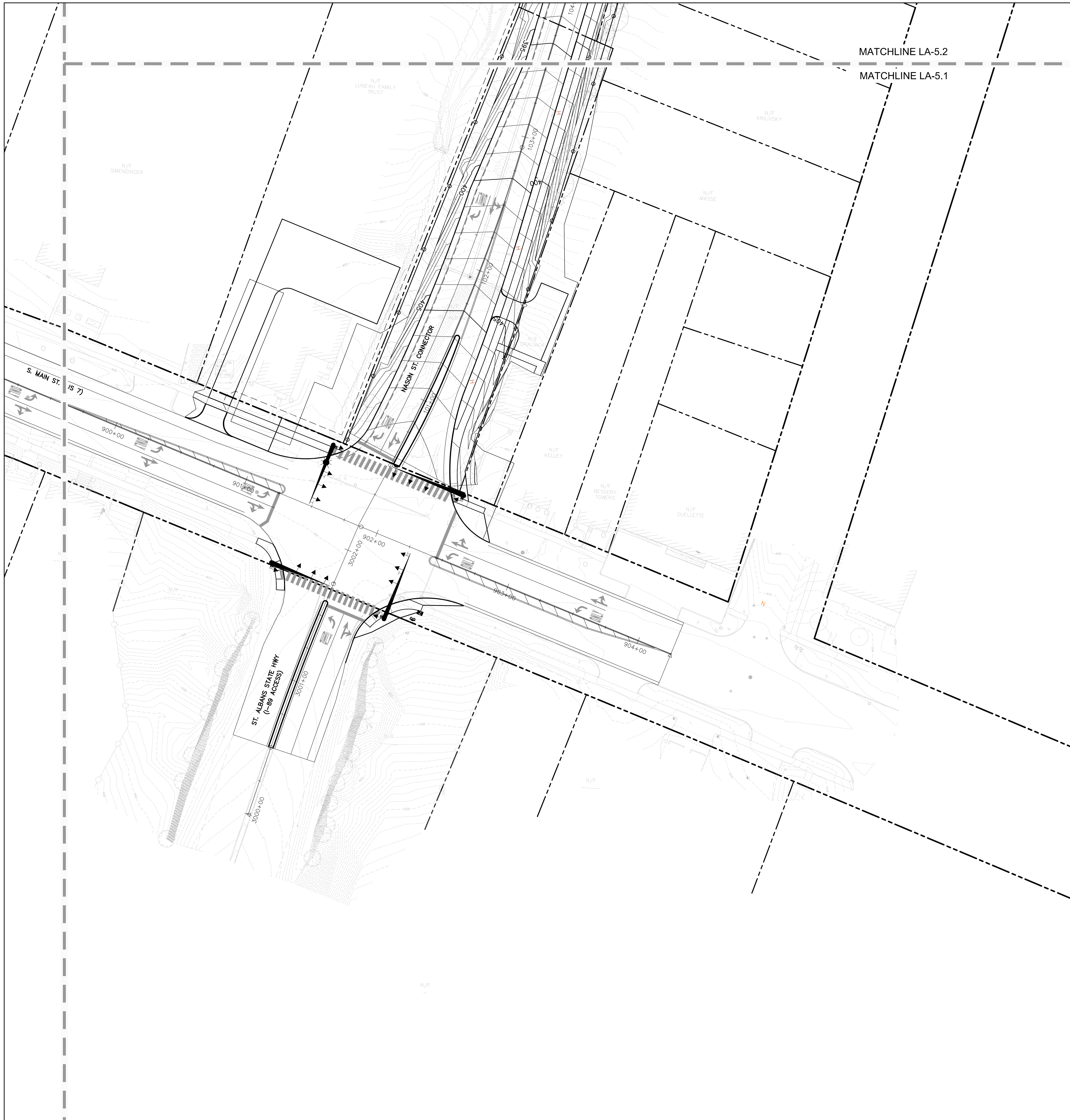

MATCHLINE LA-5.1 MATCHLINE LA-5.3

FIXTURE AND POLE SPECIFICATIONS

Fixture A -ORNAMENTAL STREET LIGHT	
Configuration:	Single Fixture
Quantity:	17
Fixture B - (**The non ornamental LED**)	
Configuration:	xxx
Quantity:	xxx

NOTES:
1. CONTRACTOR IS RESPONSIBLE TO VERIFY ALL LIGHT FIXTURE AND POLE QUANTITIES FOUND IN THE LIGHTING PLANS. IF ANY DISCREPANCIES ARE FOUND, RESIDENT ENGINEER SHOULD BE NOTIFIED IMMEDIATELY.
2. FIXTURE A - REFER TO SPECIAL PROVISIONS "ORNAMENTAL STREET LIGHT" FOR SPECIFICATIONS.
3. FIXTURE B - REFER TO SPECIAL PROVISIONS xxxxxx
4. REFER TO LIGHT FIXTURE DETAILS ON LA-5.1-5.2 FOR FIXTURE AND POLE CONFIGURATIONS WITH BANNER ARMS AND PLANT HANGERS.
5. CONTRACTOR TO PROVIDE SHOP DRAWINGS FOR REVIEW AND APPROVAL BY RESIDENT ENGINEER.
6. REFER TO GENERAL PLANS BY VHB FOR LIGHTING CONDUIT LAYOUT, AND DETAILS BY ALDRICH AND ELLIOT FOR POWER SUPPLY DETAILS.

60% SUBMISSION

0 20' 40' 80'
Graphic Scale: 1"=40'-0"

SE GROUP
Landscape Architects
131 Church Street
Burlington, VT 05401
www.segroup.com

PROJECT NAME: ST. ALBANS
PROJECT NUMBER: HPP 8000(17)

FILE NAME:
PROJECT LEADER: MKW
DESIGNED BY: MKW
LIGHTING PLAN

PLOT DATE: 02/19/2016
DRAWN BY: MKW, TH
CHECKED BY:
SHEET LA-5.1

FIXTURE AND POLE SPECIFICATIONS

Fixture A -ORNAMENTAL STREET LIGHT Configuration: Single Fixture Quantity: 17	
Fixture B - (**The non ornamental LED**) Configuration: xxx Quantity: xxx	

NOTES:
1. CONTRACTOR IS RESPONSIBLE TO VERIFY ALL LIGHT FIXTURE AND POLE QUANTITIES FOUND IN THE LIGHTING PLANS. IF ANY DISCREPANCIES ARE FOUND, RESIDENT ENGINEER SHOULD BE NOTIFIED IMMEDIATELY.
2. FIXTURE A - REFER TO SPECIAL PROVISIONS "ORNAMENTAL STREET LIGHT" FOR SPECIFICATIONS.
3. FIXTURE B - REFER TO SPECIAL PROVISIONS xxxxxx
4. REFER TO LIGHT FIXTURE DETAILS ON LA-5.1-5.2 FOR FIXTURE AND POLE CONFIGURATIONS WITH BANNER ARMS AND PLANT HANGERS.
5. CONTRACTOR TO PROVIDE SHOP DRAWINGS FOR REVIEW AND APPROVAL BY RESIDENT ENGINEER.
6. REFER TO GENERAL PLANS BY VHB FOR LIGHTING CONDUIT LAYOUT, AND DETAILS BY ALDRICH AND ELLIOT FOR POWER SUPPLY DETAILS.

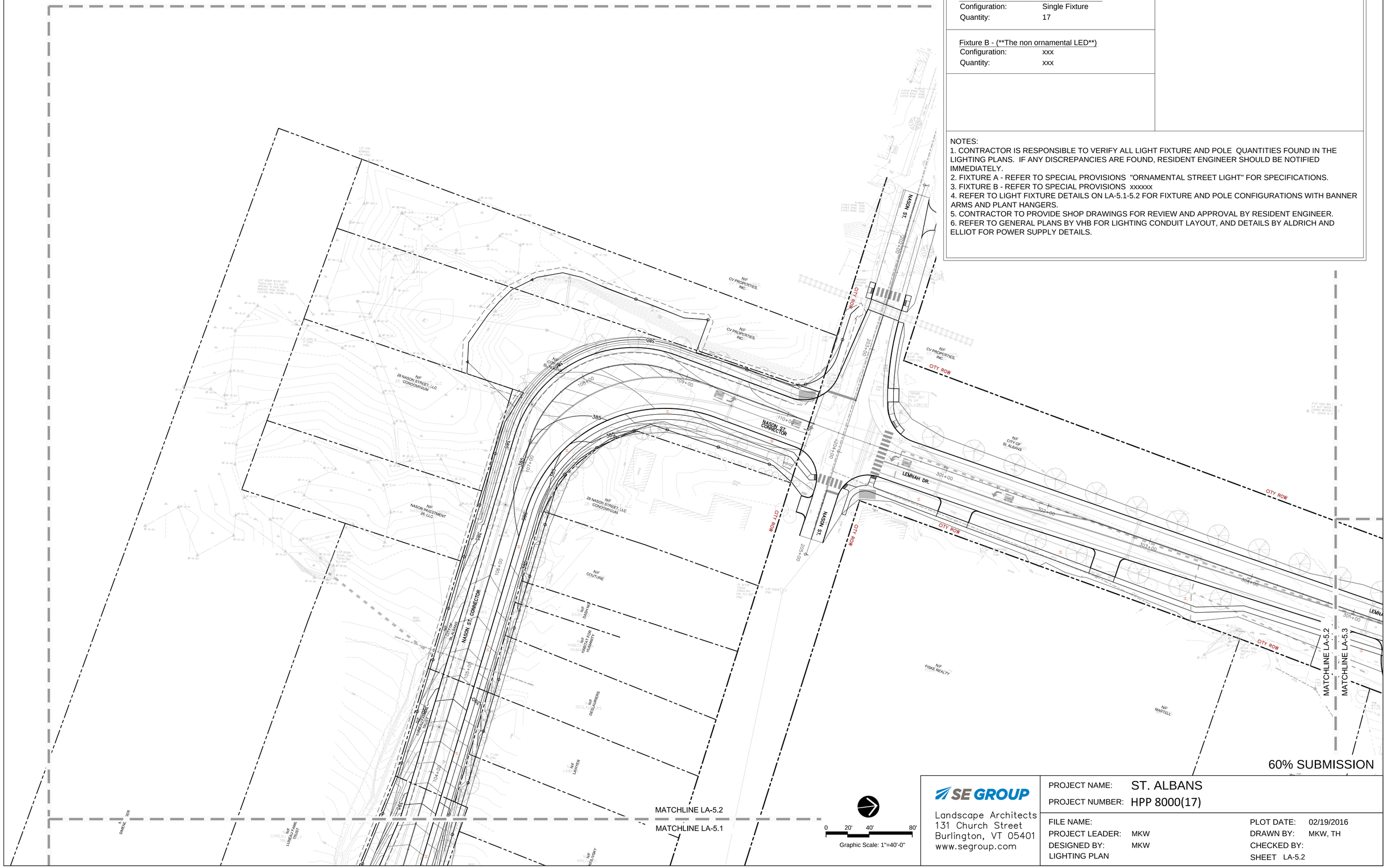

SE GROUP
Landscape Architects
131 Church Street
Burlington, VT 05401
www.segroup.com

PROJECT NAME:	ST. ALBANS		
PROJECT NUMBER:	HPP 8000(17)		
FILE NAME:		PLOT DATE:	02/19/2016
PROJECT LEADER:	MKW	DRAWN BY:	MKW, TH
DESIGNED BY:	MKW	CHECKED BY:	
LIGHTING PLAN		SHEET	LA-5.2

FIXTURE AND POLE SPECIFICATIONS

Fixture A -ORNAMENTAL STREET LIGHT Configuration: Single Fixture Quantity: 17	
Fixture B - (**The non ornamental LED**) Configuration: xxx Quantity: xxx	

NOTES:
1. CONTRACTOR IS RESPONSIBLE TO VERIFY ALL LIGHT FIXTURE AND POLE QUANTITIES FOUND IN THE LIGHTING PLANS. IF ANY DISCREPANCIES ARE FOUND, RESIDENT ENGINEER SHOULD BE NOTIFIED IMMEDIATELY.
2. FIXTURE A - REFER TO SPECIAL PROVISIONS "ORNAMENTAL STREET LIGHT" FOR SPECIFICATIONS.
3. FIXTURE B - REFER TO SPECIAL PROVISIONS xxxxxx
4. REFER TO LIGHT FIXTURE DETAILS ON LA-5.1-5.2 FOR FIXTURE AND POLE CONFIGURATIONS WITH BANNER ARMS AND PLANT HANGERS.
5. CONTRACTOR TO PROVIDE SHOP DRAWINGS FOR REVIEW AND APPROVAL BY RESIDENT ENGINEER.
6. REFER TO GENERAL PLANS BY VHB FOR LIGHTING CONDUIT LAYOUT, AND DETAILS BY ALDRICH AND ELLIOT FOR POWER SUPPLY DETAILS.

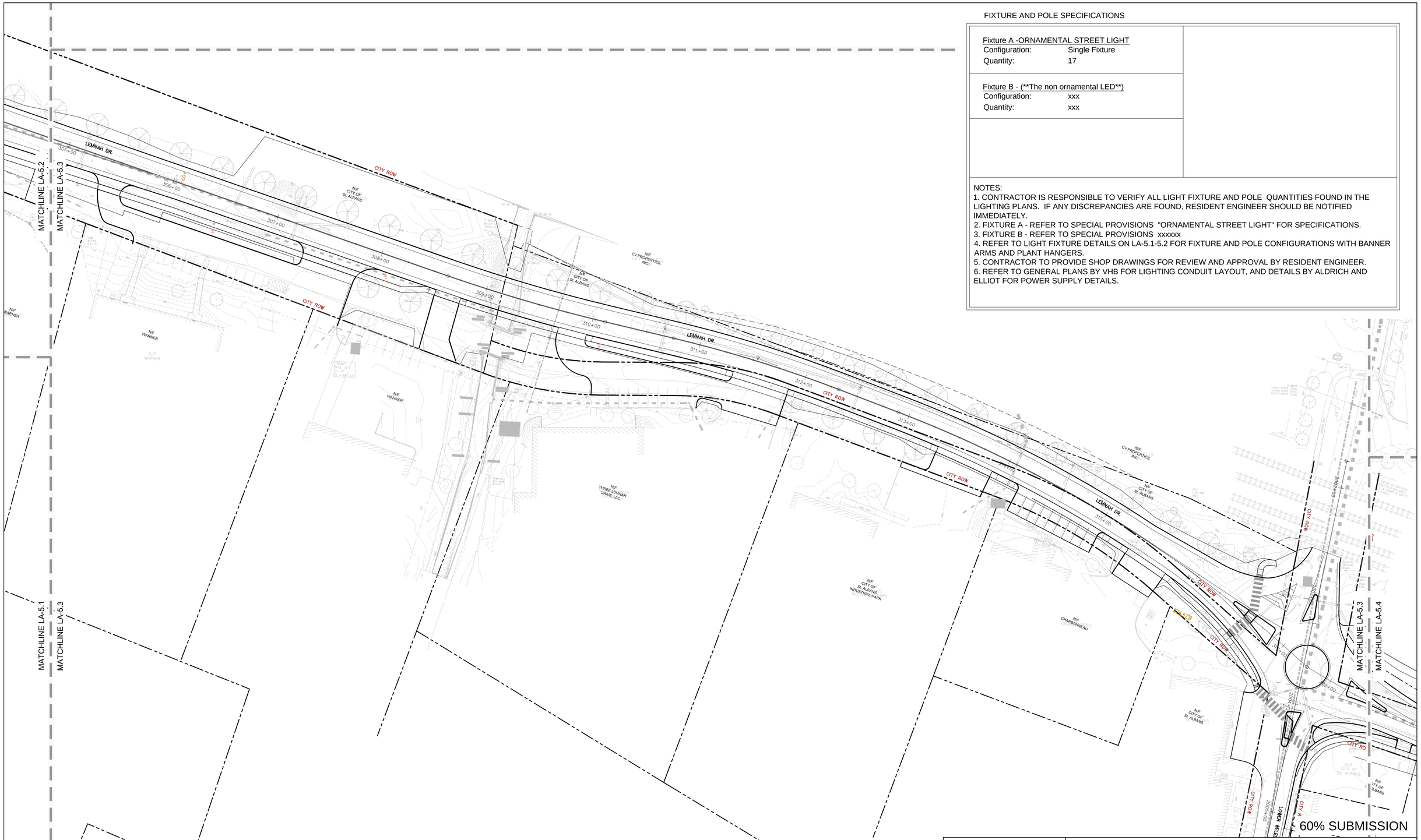

0 20' 40' 80'
Graphic Scale: 1"=40'-0"

SE GROUP
Landscape Architects
131 Church Street
Burlington, VT 05401
www.segroup.com

PROJECT NAME:	ST. ALBANS		
PROJECT NUMBER:	HPP 8000(17)		
FILE NAME:		PLOT DATE:	02/19/2016
PROJECT LEADER:	MKW	DRAWN BY:	MKW, TH
DESIGNED BY:	MKW	CHECKED BY:	
LIGHTING PLAN		SHEET	LA-5.3

FIXTURE AND POLE SPECIFICATIONS

Fixture A -ORNAMENTAL STREET LIGHT Configuration: Single Fixture Quantity: 17	
Fixture B - (**The non ornamental LED**) Configuration: xxx Quantity: xxx	

NOTES:
1. CONTRACTOR IS RESPONSIBLE TO VERIFY ALL LIGHT FIXTURE AND POLE QUANTITIES FOUND IN THE LIGHTING PLANS. IF ANY DISCREPANCIES ARE FOUND, RESIDENT ENGINEER SHOULD BE NOTIFIED IMMEDIATELY.
2. FIXTURE A - REFER TO SPECIAL PROVISIONS "ORNAMENTAL STREET LIGHT" FOR SPECIFICATIONS.
3. FIXTURE B - REFER TO SPECIAL PROVISIONS xxxxxx
4. REFER TO LIGHT FIXTURE DETAILS ON LA-5.1-5.2 FOR FIXTURE AND POLE CONFIGURATIONS WITH BANNER ARMS AND PLANT HANGERS.
5. CONTRACTOR TO PROVIDE SHOP DRAWINGS FOR REVIEW AND APPROVAL BY RESIDENT ENGINEER.
6. REFER TO GENERAL PLANS BY VHB FOR LIGHTING CONDUIT LAYOUT, AND DETAILS BY ALDRICH AND ELLIOT FOR POWER SUPPLY DETAILS.

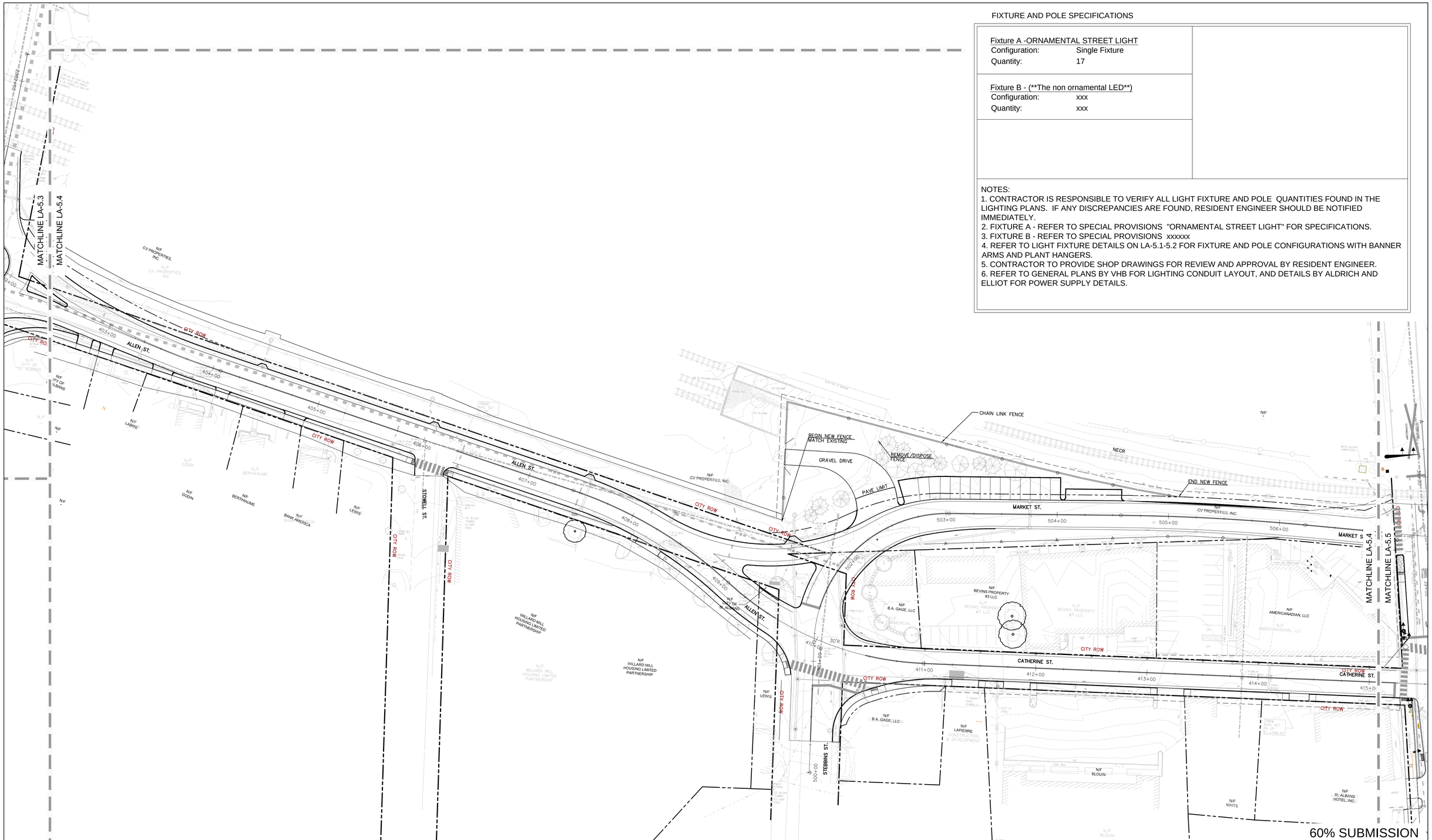

0 20' 40' 80'
Graphic Scale: 1"=40'-0"

SE GROUP
Landscape Architects
131 Church Street
Burlington, VT 05401
www.segroup.com

PROJECT NAME: ST. ALBANS
PROJECT NUMBER: HPP 8000(17)

FILE NAME:
PROJECT LEADER: MKW
DESIGNED BY: MKW
LIGHTING PLAN

PLOT DATE: 02/19/2016
DRAWN BY: MKW, TH
CHECKED BY:
SHEET LA-5.4

FIXTURE AND POLE SPECIFICATIONS

Fixture A -ORNAMENTAL STREET LIGHT Configuration: Single Fixture Quantity: 17	
Fixture B - (**The non ornamental LED**) Configuration: xxx Quantity: xxx	

NOTES:
1. CONTRACTOR IS RESPONSIBLE TO VERIFY ALL LIGHT FIXTURE AND POLE QUANTITIES FOUND IN THE LIGHTING PLANS. IF ANY DISCREPANCIES ARE FOUND, RESIDENT ENGINEER SHOULD BE NOTIFIED IMMEDIATELY.
2. FIXTURE A - REFER TO SPECIAL PROVISIONS "ORNAMENTAL STREET LIGHT" FOR SPECIFICATIONS.
3. FIXTURE B - REFER TO SPECIAL PROVISIONS xxxxxx
4. REFER TO LIGHT FIXTURE DETAILS ON LA-5.1-5.2 FOR FIXTURE AND POLE CONFIGURATIONS WITH BANNER ARMS AND PLANT HANGERS.
5. CONTRACTOR TO PROVIDE SHOP DRAWINGS FOR REVIEW AND APPROVAL BY RESIDENT ENGINEER.
6. REFER TO GENERAL PLANS BY VHB FOR LIGHTING CONDUIT LAYOUT, AND DETAILS BY ALDRICH AND ELLIOT FOR POWER SUPPLY DETAILS.

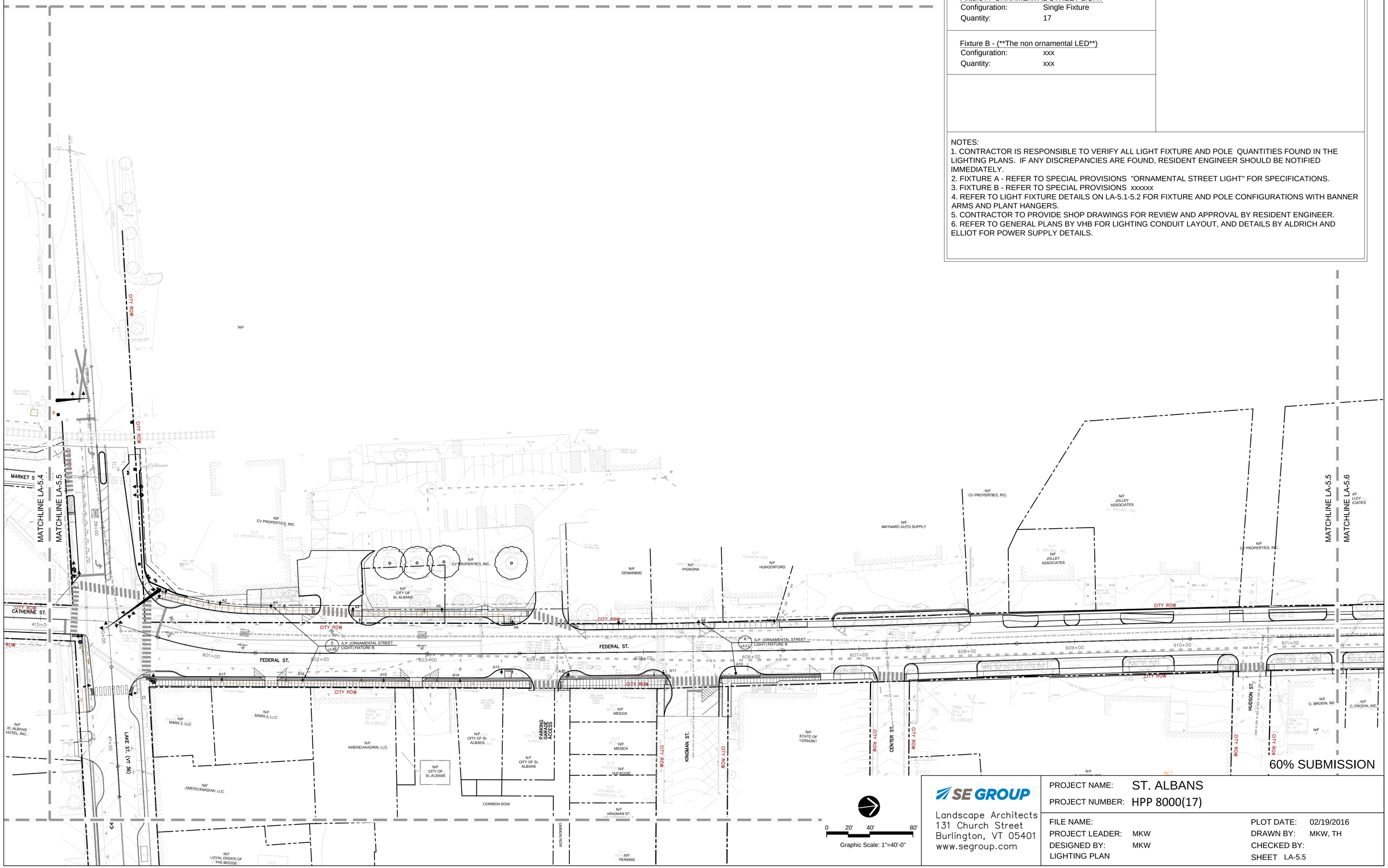

SE GROUP
Landscape Architects
131 Church Street
Burlington, VT 05401
www.segroup.com

PROJECT NAME: ST. ALBANS
PROJECT NUMBER: HPP 8000(17)

FILE NAME:
PROJECT LEADER: MKW
DESIGNED BY: MKW
LIGHTING PLAN

PLOT DATE: 02/19/2016
DRAWN BY: MKW, TH
CHECKED BY:
SHEET LA-5.5

FIXTURE AND POLE SPECIFICATIONS

Fixture A -ORNAMENTAL STREET LIGHT Configuration: Single Fixture Quantity: 17	
Fixture B - (**The non ornamental LED**) Configuration: xxx Quantity: xxx	

NOTES:
1. CONTRACTOR IS RESPONSIBLE TO VERIFY ALL LIGHT FIXTURE AND POLE QUANTITIES FOUND IN THE LIGHTING PLANS. IF ANY DISCREPANCIES ARE FOUND, RESIDENT ENGINEER SHOULD BE NOTIFIED IMMEDIATELY.
2. FIXTURE A - REFER TO SPECIAL PROVISIONS "ORNAMENTAL STREET LIGHT" FOR SPECIFICATIONS.
3. FIXTURE B - REFER TO SPECIAL PROVISIONS xxxxxx
4. REFER TO LIGHT FIXTURE DETAILS ON LA-5.1-5.2 FOR FIXTURE AND POLE CONFIGURATIONS WITH BANNER ARMS AND PLANT HANGERS.
5. CONTRACTOR TO PROVIDE SHOP DRAWINGS FOR REVIEW AND APPROVAL BY RESIDENT ENGINEER.
6. REFER TO GENERAL PLANS BY VHB FOR LIGHTING CONDUIT LAYOUT, AND DETAILS BY ALDRICH AND ELLIOT FOR POWER SUPPLY DETAILS.

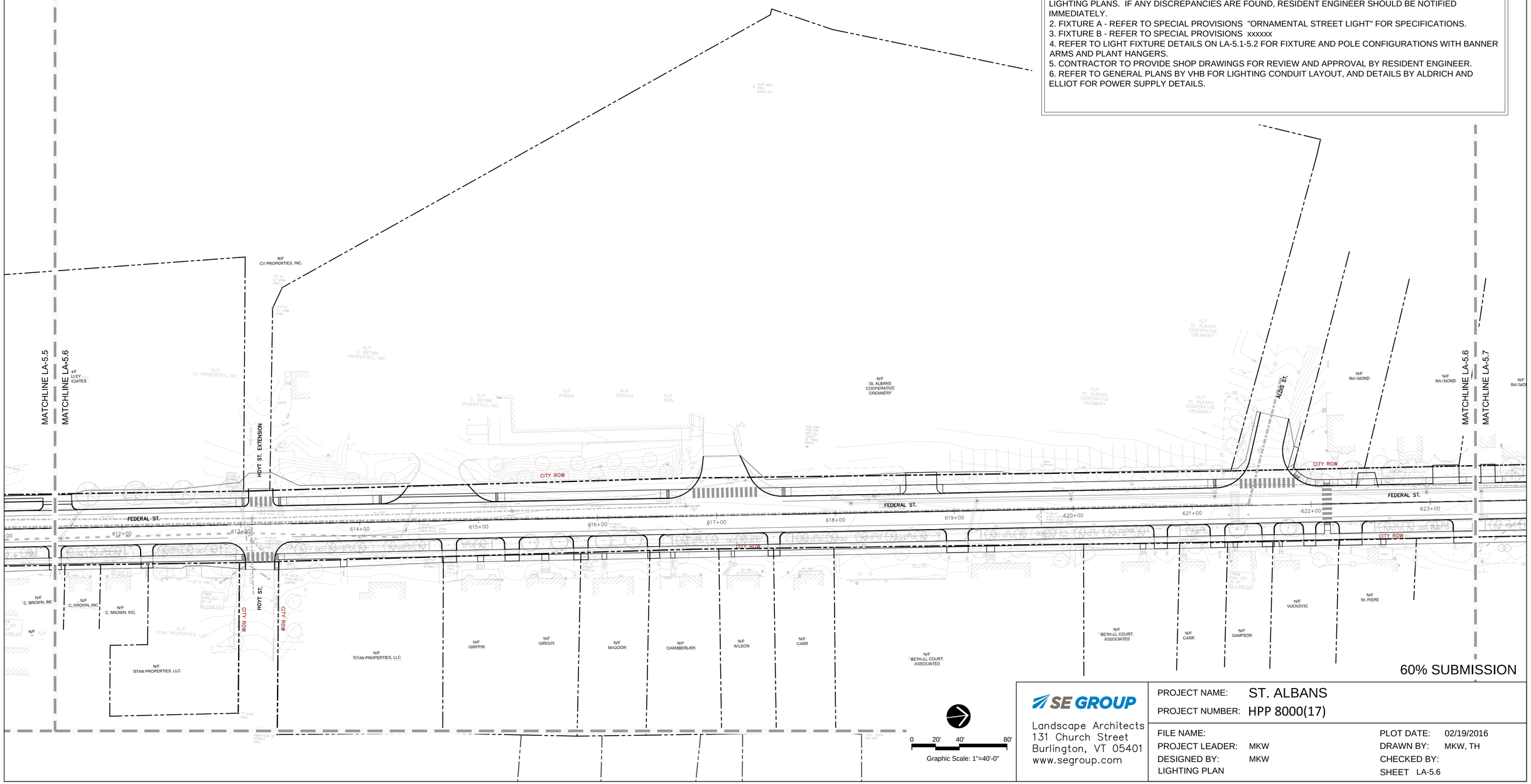

60% SUBMISSION

SE GROUP
Landscape Architects
131 Church Street
Burlington, VT 05401
www.segroup.com

PROJECT NAME: ST. ALBANS
PROJECT NUMBER: HPP 8000(17)

FILE NAME:
PROJECT LEADER: MKW
DESIGNED BY: MKW
LIGHTING PLAN

PLOT DATE: 02/19/2016
DRAWN BY: MKW, TH
CHECKED BY:
SHEET LA-5.6

FIXTURE AND POLE SPECIFICATIONS

Fixture A -ORNAMENTAL STREET LIGHT	
Configuration:	Single Fixture
Quantity:	17
Fixture B - (**The non ornamental LED**)	
Configuration:	xxx
Quantity:	xxx

NOTES:
1. CONTRACTOR IS RESPONSIBLE TO VERIFY ALL LIGHT FIXTURE AND POLE QUANTITIES FOUND IN THE LIGHTING PLANS. IF ANY DISCREPANCIES ARE FOUND, RESIDENT ENGINEER SHOULD BE NOTIFIED IMMEDIATELY.
2. FIXTURE A - REFER TO SPECIAL PROVISIONS "ORNAMENTAL STREET LIGHT" FOR SPECIFICATIONS.
3. FIXTURE B - REFER TO SPECIAL PROVISIONS xxxxxx
4. REFER TO LIGHT FIXTURE DETAILS ON LA-5.1-5.2 FOR FIXTURE AND POLE CONFIGURATIONS WITH BANNER ARMS AND PLANT HANGERS.
5. CONTRACTOR TO PROVIDE SHOP DRAWINGS FOR REVIEW AND APPROVAL BY RESIDENT ENGINEER.
6. REFER TO GENERAL PLANS BY VHB FOR LIGHTING CONDUIT LAYOUT, AND DETAILS BY ALDRICH AND ELLIOT FOR POWER SUPPLY DETAILS.

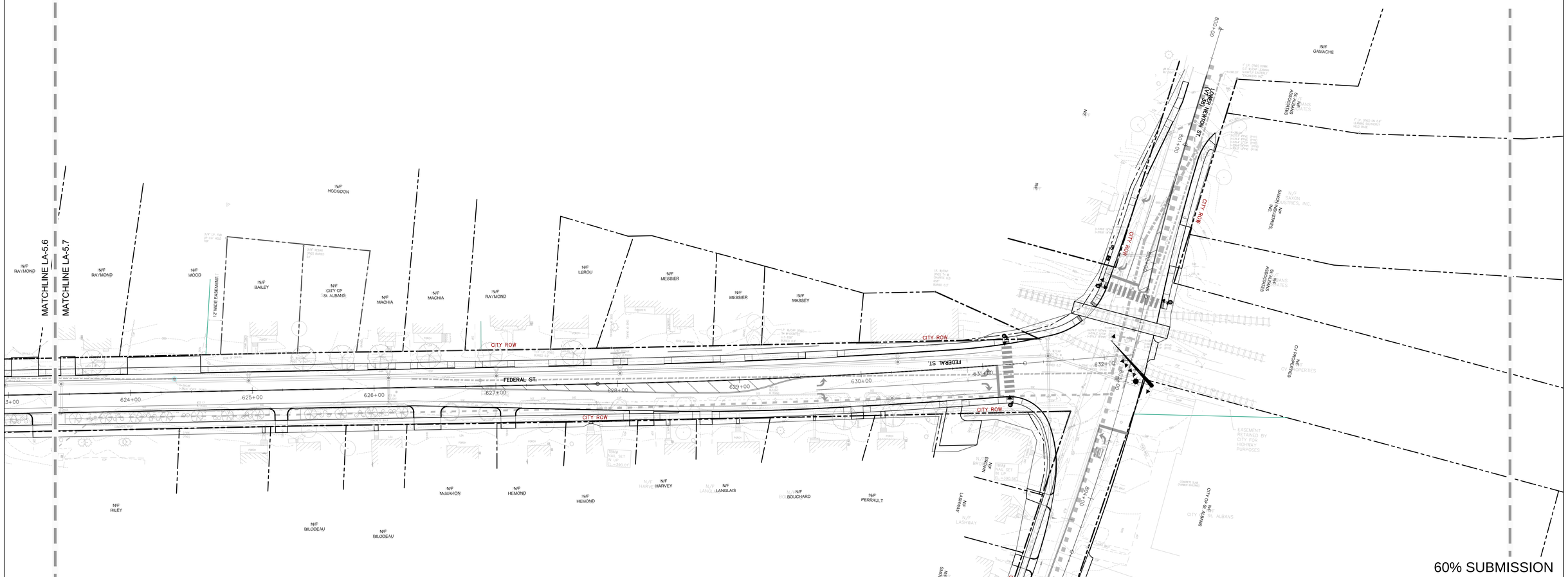

60% SUBMISSION

SE GROUP
Landscape Architects
131 Church Street
Burlington, VT 05401
www.segroup.com

PROJECT NAME:	ST. ALBANS		
PROJECT NUMBER:	HPP 8000(17)		
FILE NAME:		PLOT DATE:	02/19/2016
PROJECT LEADER:	MKW	DRAWN BY:	MKW, TH
DESIGNED BY:	MKW	CHECKED BY:	
LIGHTING PLAN		SHEET	LA-5.7

MATCHLINE LA-5.7

MATCHLINE LA-5.8

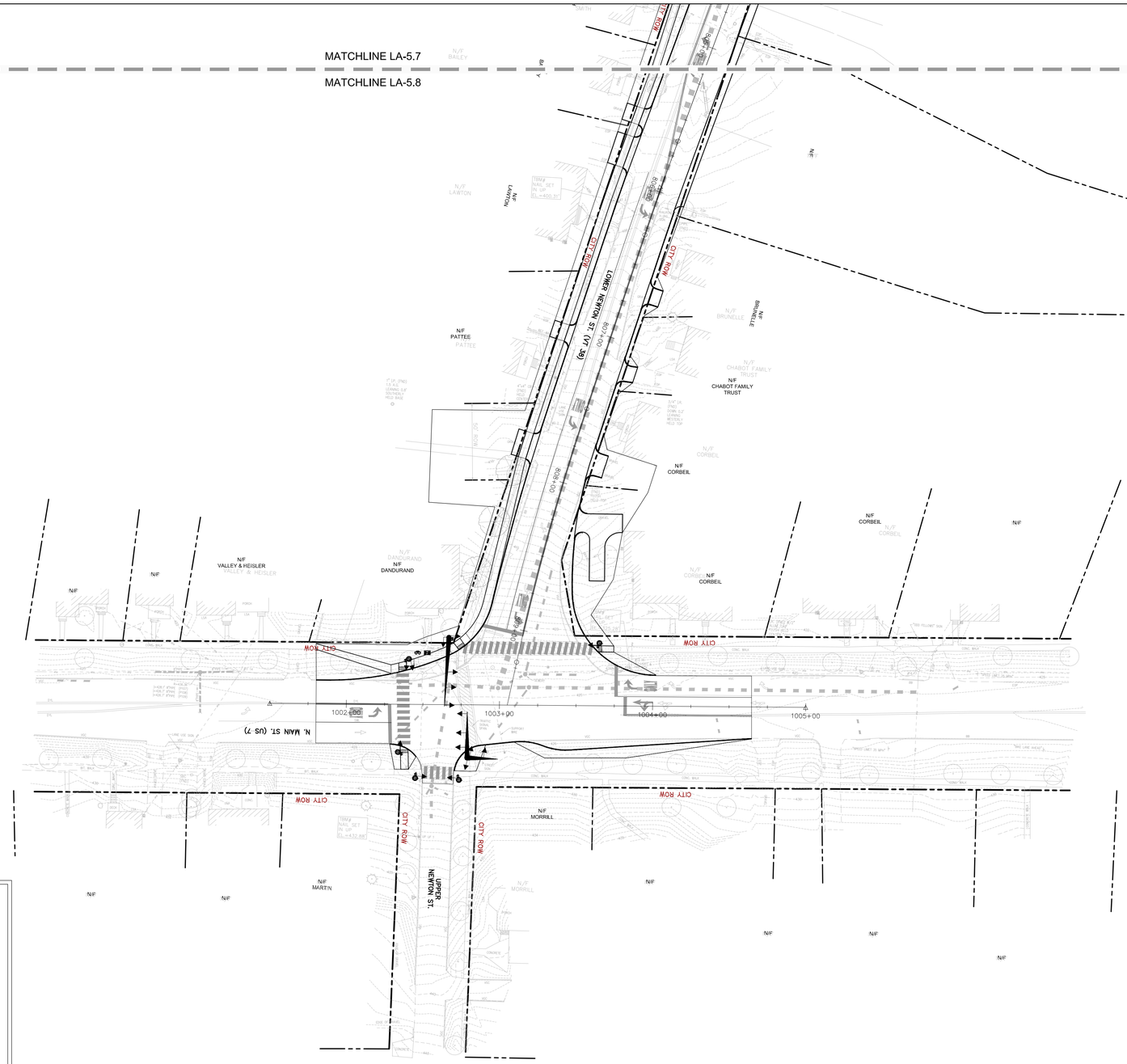

FIXTURE AND POLE SPECIFICATIONS

Fixture A -ORNAMENTAL STREET LIGHT Configuration: Single Fixture Quantity: 17	
Fixture B - (**The non ornamental LED**) Configuration: xxx Quantity: xxx	

NOTES:
1. CONTRACTOR IS RESPONSIBLE TO VERIFY ALL LIGHT FIXTURE AND POLE QUANTITIES FOUND IN THE LIGHTING PLANS. IF ANY DISCREPANCIES ARE FOUND, RESIDENT ENGINEER SHOULD BE NOTIFIED IMMEDIATELY.
2. FIXTURE A - REFER TO SPECIAL PROVISIONS "ORNAMENTAL STREET LIGHT" FOR SPECIFICATIONS.
3. FIXTURE B - REFER TO SPECIAL PROVISIONS xxxxxx
4. REFER TO LIGHT FIXTURE DETAILS ON LA-5.1-5.2 FOR FIXTURE AND POLE CONFIGURATIONS WITH BANNER ARMS AND PLANT HANGERS.
5. CONTRACTOR TO PROVIDE SHOP DRAWINGS FOR REVIEW AND APPROVAL BY RESIDENT ENGINEER.
6. REFER TO GENERAL PLANS BY VHB FOR LIGHTING CONDUIT LAYOUT, AND DETAILS BY ALDRICH AND ELLIOT FOR POWER SUPPLY DETAILS.

0 20' 40' 80'

Graphic Scale: 1"=40'-0"

60% SUBMISSION

SE GROUP
Landscape Architects
131 Church Street
Burlington, VT 05401
www.segroup.com

PROJECT NAME: ST. ALBANS

PROJECT NUMBER: HPP 8000(17)

FILE NAME:

PROJECT LEADER: MKW

DESIGNED BY: MKW

LIGHTING PLAN

PLOT DATE: 02/19/2016

DRAWN BY: MKW, TH

CHECKED BY:

SHEET LA-5.8

NOTES:
1. POLE BASE IS TO BE ONE CONTINUOUS POUR.
2. THE CONTRACTOR WILL TAKE SPECIAL CARE TO INSURE CONCRETE POLE BASES ARE INSTALLED ABSOLUTELY VERTICAL AND LEVEL.
3. REFER TO SITE PLAN AND LIGHT POLE BASE LAYOUT DETAILS FOR PROPER HORIZONTAL LAYOUT OF THE POLE BASES WITH THE BRICK PAVING BANDS AND SURROUNDING PAVEMENT SURFACES AND CURBING.
4. CONTRACTOR TO REVIEW LIGHT POLE BASE LAYOUT DETAILS FOR PROPER HORIZONTAL LAYOUT WITH BRICK PAVING AND ASSOCIATED HARDSCAPE.

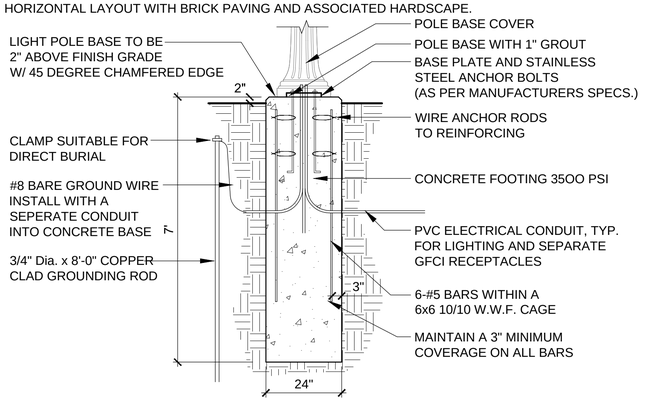

PAID UNDER:
LIGHT POLE BASE, ITEM 679.21

B LIGHT POLE BASE

SCALE 1/2" = 1'-0"

d-24 Flush-footing.dwg

NOTES:
1. CONTRACTOR IS TO TAKE SPECIAL CARE WHEN SETTING THE LIGHT POLES BASES TO ENSURE THE BASES LINE UP PROPERLY WITH THE BRICK PAVING PATTERN IN THE SIDE WALK. MISALIGNED POLE BASES WILL NOT BE ACCEPTED.
2. WHEN LIGHT POLE BASE IS LOCATED IN A LANDSCAPE BED OR LAWN AREA, , CENTER OF LIGHT POLE BASE SHOULD BE 42" FROM OUTSIDE FACE OF CURB, UNLESS OTHERWISE NOTED ON THE PLANS.

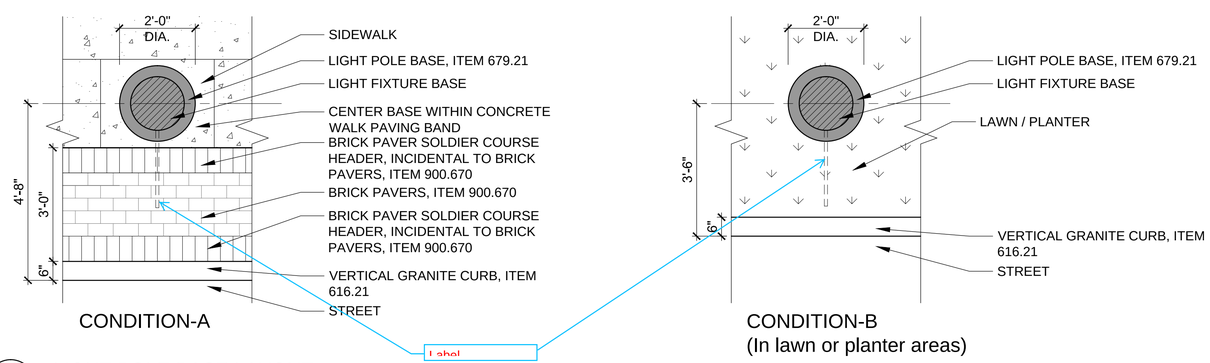

C LIGHT POLE BASE LAYOUT

SCALE 1/2" = 1'-0"

d-light pole base layout.dwg

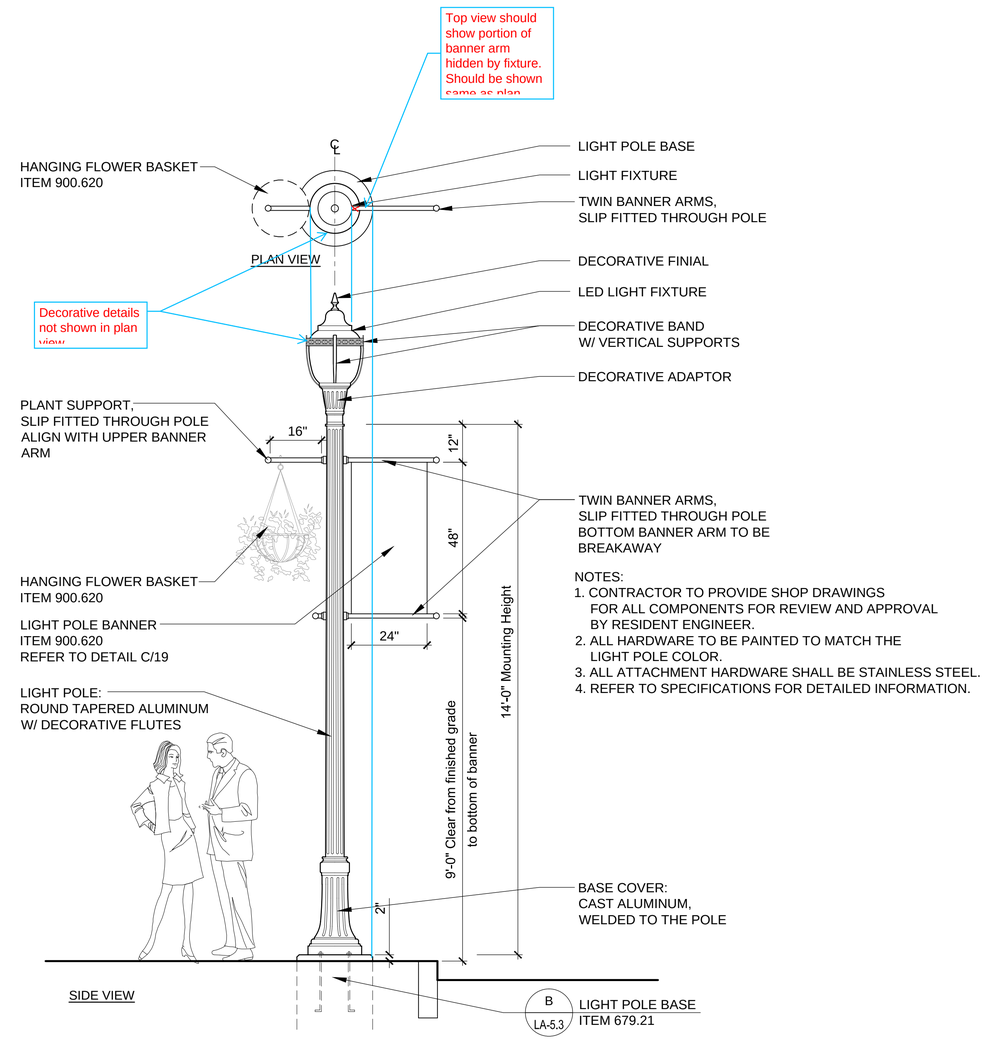

NOTES:
1. CONTRACTOR TO PROVIDE SHOP DRAWINGS FOR ALL COMPONENTS FOR REVIEW AND APPROVAL BY RESIDENT ENGINEER.
2. ALL HARDWARE TO BE PAINTED TO MATCH THE LIGHT POLE COLOR.
3. ALL ATTACHMENT HARDWARE SHALL BE STAINLESS STEEL.
4. REFER TO SPECIFICATIONS FOR DETAILED INFORMATION.

A SPECIAL PROVISION (ORNAMENTAL STREET LIGHT - FIXTURE A)

SCALE 1/2" = 1'-0"

d-light fixture - fixture A.dwg

60% SUBMISSION

SE GROUP
Landscape Architects
131 Church Street
Burlington, VT 05401
www.segroup.com

PROJECT NAME:	ST. ALBANS
PROJECT NUMBER:	HPP 8000(17)
FILE NAME:	
PROJECT LEADER:	MKW
DESIGNED BY:	MKW
LANDSCAPE LIGHTING DETAILS	
PLOT DATE:	02/19/2016
DRAWN BY:	MKW, TH
CHECKED BY:	
SHEET	LA-5.3

you will be working in the Railroad ROW so Railroad traffic control will be needed with NECR Flagger

COARSE AGGREGATE BACKFILL

xx. DESCRIPTION. This work shall consist of furnishing and placing coarse aggregate backfill as shown in the Plans and as directed by the Engineer.

xx. MATERIALS. Gradation shall meet the requirements of Table 704.02B.

xx. CONSTRUCTION REQUIREMENTS. The surface where backfill is to be placed shall be prepared to a smooth condition free of debris, depressions, or obstructions which may damage the geotextile.

Geotextile fabric shall be placed in accordance with Section 649.

Coarse aggregate backfill shall be placed in uniform layers of not more than 150 mm (6 inches) in thickness and thoroughly compacted by use of air or mechanical tampers. The coarse aggregate backfill shall not be placed directly by dumping from haul vehicles or by pushing material by bulldozers, graders, or other equipment. Placing shall be limited to the use of hand shovels, backhoes, front end loaders, or other similar types of equipment as approved by the Engineer.

xx. METHOD OF MEASUREMENT. The quantity of Special Provision (Coarse Aggregate Backfill) to be measured for payment will be the number of cubic meters (cubic yards) installed in the complete and accepted work, measured within the limits shown on the Plans or as directed by the Engineer.

xx. BASIS OF PAYMENT. The accepted quantity of Special Provision (Coarse Aggregate Backfill) will be paid for at the Contract unit price per cubic meter (cubic yard). Payment will be full compensation for furnishing, transporting, handling, and placing the material specified and for furnishing all labor, tools, equipment, and incidentals necessary to complete the work.

Excavation and geotextile fabric will be paid for separately under the appropriate Contract items.

Payment will be made under:

Pay Item	Pay Unit
900.608 Special Provision (Coarse Aggregate Backfill)	Cubic Meter (Cubic Yard)

SECTION 900.608

SPECIAL PROVISION EXCAVATION AND DISPOSAL OF CONTAMINATED SOILS

1. DESCRIPTION. This work shall consist of excavating and properly disposing of contaminated soils from roadways, sidewalks, landscaping installation, and stormwater management facilities in reasonably close conformity with the lines, grades, and typical cross sections shown on the Plans or established by the Engineer. The work shall include proper identification, classification, excavation, removal, treatment, transportation, and final placement of the contaminated soils.

2. CLASSIFICATION. The work shall be classified as follows:

   a) Petroleum Contaminated Soils. Petroleum contaminated soils will be classified in accordance with the latest edition of the Vermont Agency of Natural Resources *Agency Guidelines for Petroleum Contaminated Soil and Debris* (ANR Guidelines).

      Petroleum contaminated soils requiring either on-site or off-site remediation shall be identified as Class I Contaminated Soils, defined as follows:

      Class I contaminated soils exhibit a volatile organic compound (VOC) concentration ranging from 1.0 to 100 parts per million (ppm) as measured by a properly calibrated photo ionization detector (PID) following the field screening guidelines outlined in the ANR Guidelines.

      Petroleum contaminated soils not suitable for on-site or off-site remediation shall be identified as Class II Contaminated Soils, defined as follows:

      Class II contaminated soils exhibit a VOC concentration ranging from 100 to 1000 ppm as measured by a properly calibrated PID following the field screening guidelines outlined in the ANR Guidelines.

   b) Contaminated Soils Designated as Hazardous Waste.

      Soils classified as Hazardous Waste shall be identified as Class III Contaminated Soils, defined as follows:

      Class III contaminated soils include petroleum contaminated soils which exhibit a VOC concentration greater than 1000 ppm as measured by a properly calibrated PID following the field screening guidelines outlined in the ANR Guidelines, as any soils containing Listed or Characteristic hazardous waste. These soils include coal tar, heavy and toxic metals, solvents, chemicals, and/or any other classified or unclassified contaminant.

The ANR Guidelines can be found at the following website address:

http://www.anr.state.vt.us/dec/wastediv/sms/

Contamination levels may also be monitored by State personnel.

For information regarding the remediation and/or disposal plan, contact the Agency's Hazardous Materials and Waste Coordinator. The information provided to the Contractor by the Hazardous Materials and Waste Coordinator is presented in good faith and is not intended to be a substitute for any investigation that the Contractor may conduct on their own.

a) Contaminated Groundwater. If contaminated groundwater is encountered and must be dewatered to complete construction of subsurface infrastructure, the contractor must engage an environmental consultant to develop and implement a wastewater management plan. The wastewater management plan must be submitted to, and approved by, the Agency of Natural Resources and the City of St. Albans in conjunction with the Construction Resident Engineer assigned to the project.

b) The wastewater management plan must include sampling, monitoring and treatment methods for contaminants of concern. The sampling and monitoring methodology will be dependent on the treatment method selected. Treatment methods include reinjection, carbon filtration, air stripping, fractionation tank storage and carbon filtration, or disposal at a wastewater treatment plant. If treated waste water is destined to be discharged to surface water, the engaged consultant must apply for and receive a waste water discharge permit (1272 Order). The permit application must be reviewed and authorized by the Agency of Natural Resources and the City of St. Albans prior to implementation.

c) All contaminated groundwater must be managed, stored, treated, and/or disposed in accordance with ANR "Guidance for Construction of Public Works Projects in Areas Where Contamination is Suspected or Known" and can be found through the following link;

http://www.anr.state.vt.us/dec/wastediv/sms/pubs/waterline_guide.pdf.

For information regarding guidance in developing the remediation and/or disposal plan, the Contractor shall contact the Agency of Natural Resources, Waste Management Division.

3. GENERAL CONSTRUCTION REQUIREMENTS. The Contractor shall either follow the remediation and/or disposal plan developed by ANR or submit an alternate remediation and/or disposal plan which must be approved by ANR and the Engineer prior to implementation.

Unless otherwise directed in writing by the Engineer, the Contractor shall comply with all provisions of the remediation/disposal plan.

All changes to the remediation/disposal plan ordered in writing by the Engineer will be paid for as Extra Work.

The Contractor shall hire a qualified consultant who shall prepare a site specific Health & Safety Plan, train site workers, monitor contamination levels of excavated soils, and ensure that the remediation/disposal plan is followed. Complete copies of the details of the plan and program shall be provided to the Engineer.

The Agency of Natural Resources' (ANR's) Hazardous Materials and Waste Coordinator, or his/her representative, may also monitor the contamination levels of the excavated soils for the Engineer and ensure that the remediation and/or disposal plan is fully followed.

If during the excavation of petroleum contaminated soil, the Contractor encounters any condition or situation which is different from that expected, the Contractor shall immediately notify the Engineer. All excavation operations in the contaminated area shall cease until the condition or situation can be evaluated. The evaluation shall include, but is not limited to, the determination of health or other hazards to the Contractor's personnel and the immediate neighborhood, the possibility of explosion, requirements for protective clothing, and special excavation or transportation requirements.

In the event that unexpected hazardous waste or petroleum contaminated soil is encountered in excavation, excavation operations in the area shall cease. The Agency and the Contractor shall determine the necessary procedures to be followed in the excavation of the hazardous waste and/or petroleum contaminated soil and will negotiate a Supplemental Agreement for its removal in accordance with Subsection 109.06. Excavation shall not resume until the Supplemental Agreement is fully executed. No additional compensation will be made for any delays incurred waiting for an agreement to be executed or failure to reach an agreement.

The Engineer will decide whether to leave the excavation open and exposed, whether barrier fence shall be erected around the excavation to act as a visible barrier, or whether to backfill it while ANR and the Contractor are evaluating the situation and negotiating the Supplemental Agreement. The cost of installing barrier fence or backfilling the excavated area, if either is required, will be included in the Supplemental Agreement.

4. METHOD OF MEASUREMENT. The quantities of Special Provision (Excavation of Petroleum Contaminated Soils, Class I), Special Provision (Excavation of Petroleum Contaminated Solis, Class II), and Special Provision (Excavation of Contaminated Soils, Class III) to be measured for payment will be the number of cubic meters (cubic yards) of material removed and designated for remediation and/or disposal, as indicated on the Plans or as directed by the Engineer, as measured in its original position by cross sections, in the complete and accepted work. The quantity shall be computed by the method of average end areas, or when impractical, by other acceptable methods involving three-dimensional measurement. The limits for payment shall not exceed those indicated on the Plans or designated by the Engineer in writing. The method of mass centers for computing volumes will be allowed only when the method has been used in the original design computations.

   Excavation requiring more than one handling prior to final placement will not be measured for payment for the additional handling unless specifically called for in the Contract Documents.

5. BASIS OF PAYMENT. The accepted quantities of Special Provision (Excavation of Petroleum Contaminated Soils, Class I), Special Provision (Excavation of Petroleum Contaminated Solis, Class II), and Special Provision (Excavation of Contaminated Soils, Class III) will be paid for at the Contract unit price per cubic meter (cubic yard).

For this project the price per cubic yard for any of the above contaminated soil classifications is set at $100.00/CY for all bidders and shall be paid under the Class 1 item.

Payment shall be full compensation for performing the work specified, including research; employee training; monitoring; and developing and complying with the Health and Safety Plan; classifying, segregating, and stockpiling soil materials; performing any testing required; satisfactorily transporting and disposing of contaminated materials (soils and/or groundwater); and for providing all materials, labor, tools, equipment, and incidentals necessary to complete the work.

Payment for petroleum contaminated soils re-used on the project will be made as follows:

a) The first payment of 50% of the actual quantity will be paid when the material is placed at the treatment site.

b) The remaining 50% of the actual quantity will be paid when the material has been incorporated back into the project.

Payment for petroleum contaminated soils not re-used on the project will be made as follows:

a) The first payment of 67% of the actual quantity will be paid when the material is placed at a treatment site or otherwise properly removed from the project.

b) The remaining 33% of the actual quantity will be paid when proper disposal in accordance with the remediation and/or disposal plan has been completed. The remaining 33% of the actual quantity will not be paid if proper disposal of the petroleum contaminated soil is not accomplished prior to Final Inspection.

Payment will be made under:

Pay Item		Pay Unit
900.608	Special Provision (Excavation of Petroleum Contaminated Soils, Class I)	Cubic Yard

SECTION 900.608

SPECIAL PROVISION SOIL PREPARATION

PART 1 - GENERAL

1.01 DESCRIPTION

A. Related Requirements: Review the General Contract Conditions and Division One, General Requirements, which contain information and requirements that apply to this Section.

B. Work Included: Provide all products and execute all labor to achieve soil preparation for tree planting areas, shrub and perennial planting areas, and areas to be seeded complete as shown and as specified.

C. Related Work in Other Sections:
Special Provision Trees, Shrubs and Groundcover – 900.620
Special Provision Landscape Maintenance – 900.620

1.02 QUALITY ASSURANCE

A. Submit certificates of inspection required by law for transportation with invoice. File copies of certificates after acceptance of material.

B. Perform all work in accordance with recommendations included in the geotechnical reports produced for this project.

1.03 PROJECT CONDITIONS

A. Protection of Existing Plants to Remain: See Section 01 5639 - Tree Protection and Pruning

1.04 SUBMITTALS

A. Upon forty-five (45) days minimum, prior to start of installation of items in this section, the Contractor shall provide submittals required in this section to the landscape architect for review and approval.

B. Product Data: For each type of product, submit manufacturer's product literature with technical data sufficient to demonstrate that the product meets the requirements of the specification.

C. Material Certificates: Submit material certificates for all natural and bulk material indicating that the material meets the requirements of the specification.

D. Soil test analysis: Submit a minimum of (3) samples of both topsoil and compost, providing the soil testing results from an approved soil-testing laboratory for each soil and planting soil mix for approval.

1. All testing will be at the expense of the Contractor. The resident engineer or landscape architect may request additional planting soil mix tests on different mix component ratios in order to attain results that more closely meet the mix requirements.

2. The testing laboratory shall be a member of the Soil Science Society of America's, North American Proficiency Testing Program (NAPT).

3. All testing shall comply with the requirements of the Methods of Soil Analysis Part 1 and 3, published by the Soil Science Society of America and in accordance with ASTM D2487.

4. Soil testing shall be as required for each product as defined below:
   a. Physical analysis.
      1. Particle size analysis shall be provided for gravel, clay, silt, and sand fractions
      2. USDA soil texture
      3. Fines Modulus Index for each sand source
      4. Infiltration testing shall be done at 75 - 80% compaction at proctor density using ASTM D 698-91. Test Results shall include bulk density

   b. Chemical analysis. Note that nutrient levels and chemical analysis shall include recommendations from the testing laboratory for ranges of each element appropriate for the types of plants to be grown in the plant soil mix.
      1. Nutrient levels by parts per million including phosphorus, potassium, calcium, magnesium, manganese, iron, copper, zinc and calcium
      2. Percent organic content
      3. pH
      4. Soluable salt by electrical conductivity
      5. Cation Exchange Capacity (CEC)

E. Samples for Verification: Submit samples of each product and material where required by the specification to the landscape architect for approval. Label samples to indicate product, source location, specification number, characteristics, and locations in the Work. Samples will be reviewed for appearance only. Compliance with all other requirements is the exclusive responsibility of the contractor. Delivered materials to the site shall closely match the samples.

1. Imported Topsoil: 1 Gal
2. Compost: 1 Gal.
3. Organic Amendments: 1 pint for each type
4. Soil Mixes: 1 Gal for each type, labeled as to the percentage of each component in the mix.

4. Sand: ½ pound
5. Chemical Additives: 1 pint for each type

1.05 DEFINITIONS

A. Landscape Backfill: Soil, of a variety of textures, defined in this section, intended to fill the Planting bed areas and other planting spaces to support the growth of trees and other plants.

B. Soil Peds: Clumps of soil that naturally aggregate during the soil building process. Creating a soil mix shall be done in a way that maintains the soil peds. Refrain from over-mixing.

1.06 PRODUCT DELIVERY, STORAGE AND HANDLING

A. Packaged Materials: Deliver packaged materials in original, unopened containers showing weight, certified analysis, name and address of manufacturer, and indication of conformance with state and federal laws, if applicable. Protect materials from deterioration during delivery and while on the project site.

B. Bulk Materials: Do not deliver or place backfill, soils and soil amendments in frozen, wet, or muddy conditions.
   1. Bulk materials shall be stored and staged in a location approved by landscape architect or as indicated on the plans and in a manner that prevents damage to the site or the stored materials.
   2. Provide protection including tarps, plastic and or matting between all bulk materials and any finished surfaces sufficient to protect the finish material.

C. Provide erosion-control measures to prevent erosion or displacement of bulk materials and discharge of soil-bearing water runoff or airborne dust to adjacent properties, water conveyance systems, and walkways. Provide additional sediment control to retain excavated material, backfill, soil amendments and planting mix within the project limits as needed.

1.07 ANALYSES OF SAMPLES AND TESTS

A. Sampling: Samples of materials must be taken and analyzed for conformity to specifications at any time. Furnish samples as requested.

B. Rejected Materials: Remove rejected materials immediately from the site at Contractor's expense.

C. Testing Agency: Pay cost of soil testing and of materials not meeting specifications.

D. Refer to Part 3-Execution, section 3.03 Soil Compaction for compaction testing requirements during installation.

1.08 SOIL INSTALLATION MOCK UP AND COMPACTION EVALUATION

A. Prior to the installation of planting soils, construct a mock up of an area defined by 10 x 10.. The installation of the mock up shall be in the presence of the landscape architect.

1.09 PRECONSTRUCTION MEETING

A. Prior to the start of the installation of Planting Soils, meet at the site with the landscape architect, general contractor and the subcontractor to review installation layout, procedures, means and methods.

1.10 FINAL ACCEPTANCE

A. Acceptance: Work will not be accepted until satisfactory completion of all soil preparation work.

B. Notification: Give notification of completion of soil preparation prior to proceeding with planting operations.

PART 2 - PRODUCTS

2.01 TOPSOIL, IMPORTED

A. Fertile, friable, loamy soil, free from subsoil, refuse, roots, heavy or stiff clay, stones larger than 1 inch, contaminants, noxious seeds, sticks, brush, litter, and other deleterious substances; suitable for the germination of seeds and the support of vegetative growth. Soil source location and extent of area suitable for harvest shall be approved by the landscape architect and shall comply with all local regulations governing the removal of topsoil. Frozen topsoil is not acceptable

B. Topsoil texture shall be loam, sandy loam to sandy clay loam, suitable for the germination of seeds and the support of vegetative growth, which is a naturally produced soil.

C. Physical Requirements for Topsoil

Parameter Units Acceptable Range

- Gravel > 2mm % Dry Weight Less than 10%
- Silt .002-.05 mm & % Dry Weight 15-30%
- Clay < .002mm % Dry Weight 20-35

Sieve Designation	Percent by weight passing square mesh sieves
#4	100
#10	85-100

#49	35-85
#200	10-35

D. Chemical Requirements for Topsoil

Parameter Units Acceptable Range

- Organic Matter Dry Weight 2-5%
- pH Units 6.0 to 7.5
- Soluble Salt* mmhos/cm or dS/m 3.5 or less
- Cation Exchange Capacity meQ/100g >8
- Nutrient Analysis PPM As required for the plants specified

* by electrical conductivity of a 1:1 soil water sample at 25 degrees

E. Submit soil testing results for approval by the Landscape Architect, as defined in Section 1, that the material meets the above physical and chemical requirements.

F. Areas to receive imported topsoil shall include tree planting areas, shrub and perennial planting areas, backfill mix for trees and shrubs, and lawn areas.

G. Imported Topsoil: Furnish imported topsoil from sources accepted by the Landscape Architect which meets the standards specified under "General Qualifications" above.

1. Verification: Quantity of topsoil to complete the work shall be calculated by the Contractor and included in their base bid price.
2. Analysis: Obtain an agricultural suitability analysis and soil texture analysis of the proposed topsoil from an accredited soils laboratory at Contractor's cost.
3. Acceptance: Submit soils analysis and recommendations to the Landscape Architect for acceptance. Amend topsoil per accepted soils analysis report.
4. Samples: The Landscape Architect reserves the right to take samples of the imported topsoil delivered to the site for conformance to the Specifications.
5. Rejected Topsoil: Immediately remove rejected topsoil off the site at Contractor's expense.
6. Stockpiling: If stockpiling is requested, locations and amounts of stockpiles will be designated by Landscape Architect.

2.03 COMPOST

A. Compost shall meet the requirements of the US Composting Council “Landscape Architecture/Design Specifications for Compost Use”, section “Compost as a Landscape Backfill Mix Component”, with the following additional requirements:

1. Compost feedstock shall be yard waste trimmings and/or source separated municipal solid waste to produce a fungi dominated compost. Compost shall not be derived from biosolids or industrial residuals.

B. Compost testing and analysis: Compost analysis shall be provided by the Compost supplier. Before delivery of the Compost, the supplier must provide the following documentation:

1. A statement that the Compost meets federal and state health and safety regulations.
2. Compost testing methodologies and sampling procedures shall be as provided in Test methods for the Examination of Composting and Compost (TMECC), as published by the US Composting Council.

C. Submit supplier's literature and material certification that includes physical analysis and chemical analysis of the compost.

2.04 SAND

A. Sand, as defined below, may or may not be used depending on the outcome of the soils agricultural suitability report.

B. Coarse concrete sand, ASTM C-33 Fine Aggregate, with a Fines Modulus Index of 2.8 and 3.2.

1. Sands shall be clean, sharp, natural sands free of limestone, shale and slate particles.

2. Sand PH shall be lower than 7.0

3. Provide the following particle size distribution:
   Sieve Percent Passing
   - 3/8" (9.5mm) 100
   - No 4 (4.75mm) 95-100
   - No 8 (2.36mm) 80-100
   - No 16(1.18mm) 50-85
   - No30 (.60mm) 25-60
   - No50 (.30mm) 10-30
   - No100 (.15mm) 2-10

C. Submit manufacturer's testing data for approval that the material complies with the above requirements.

2.05 CHEMICAL ADDITIVES

The following additives may or may not be used depending on the outcome of the soils agricultural suitability report.

A. Ground Limestone: Agricultural limestone containing not less than 85% of total carbonates, ground to such fineness that 50% will pass #100 sieve and 90% will pass #20 sieve.

B. Dolomite Lime: Agricultural grade mineral soil conditioner containing 35% minimum magnesium carbonate and 49% minimum calcium carbonate, 100% passing #65 sieve. "Kaiser Dolomite 65 AG" as manufactured by Kaiser, Inc. Mineral Products Department, or equal.

C. Gypsum: Agricultural grade product containing 80% minimum calcium sulphate.

D. Iron Sulfate (Ferric or Ferrous): Supplied by a commercial fertilizer supplier, containing 20% to 30% iron and 35% to 40% sulphur.

E. Sulphate of Potash: Agricultural grade containing 50% to 53% of water-soluble potash.

F. Single Superphosphate: Commercial product containing 20% to 25% available phosphoric acid.

G. Ammonium Sulphate: Commercial product containing approximately 21% ammonia.

H. Ammonium Nitrate: Commercial product containing approximately 34% ammonia.

I. Calcium Nitrate: Agricultural grade containing 15-1/2% nitrogen.

J. Urea Formaldehyde: Granular commercial product containing 38% nitrogen.

K. I.B.D.U. (Iso-Butyldiene Diurea: Commercial product containing 31% nitrogen.

2.06 HERBICIDE

A. Post Emergent Herbicide: Non-selective, systemic type herbicide.

A. Pre-Emergent Herbicide

PART 3 - EXECUTION

3.01 SOIL PREPARATION

A. General:

1. Moisture Content: Do not work soil when moisture content is so great that excessive compaction will occur, nor when it is so dry that dust will form in air or that clods will not break readily. Apply water, if necessary to bring soil to an optimum moisture content for tilling and planting. Maintain within 2 percent above or below optimum moisture content at all times during the work.
2. Clearing of Debris: Clear all planting areas of stones 2 in. diameter and larger, weeds, debris and other extraneous materials prior to amending existing soil and incorporating imported topsoil.
3. Weed Control: Weeds may require spraying for eradication prior to cultivating them into the soil.

3.02 SOIL INSTALLATION

A. General:
1. Install Landscape Backfill material in 12" lifts.
2. Blend the topsoil and compost together per the specified ratios outlined below.
3. Maintain macro pores and peds in the soil mixture, avoid overworking the soil, which breaks them down.
4. Avoid excessive compaction, refer to 3.03 Soil Compaction.

3.03 SOIL COMPACTION

A. General:
1. All tree, shrub and perennial areas planting areas shall have a minimum compaction of 75%, but shall not exceed 80% compaction.
2. The contractor will be responsible to provide test results of the soil compaction for all planting areas at the contractor's cost. The contractor will be required to perform a bulk density test using a penetrometer to determine the soil compaction.
3. Contractor will be required to receive written approval by Landscape Architect that compaction requirements are met prior to continuing surface or underground work that would prohibit any necessary corrective actions.
4. If it is determined the soil compaction does not meet the specified requirements, the contractor shall be required to take corrective actions at no additional cost to the project.

B. Preparation of Existing Soil to be Soil Conditioned:

1. Verification of Existing Grades: Verify that grades are within 1 in. plus or minus of the required finished grades or finish sub-grades. Report all variations.
2. Cultivation: Rip or cultivate all areas to be soil conditioned to a depth of 6 in. for all lawn and grass area and 10" for all perennial and ground cover immediately prior to amending existing soil.
3. Trees to Remain: Hand cultivate within the dripline of existing trees to remain. Depth of cultivation shall not exceed 2 in. Cultivate immediately prior to amending existing soil.

3.04 SOIL CONDITIONING

A. Landscape Backfill Mix for Tree Planting Areas (identified on Landscape Planting Plans):

1. **Excavate all tree planting areas to a depth of 30" below finished grade. At proposed tree locations, DO NOT excavate beyond the depth of the rootball. Rootball should rest on existing subgrade.**
   Contractor is responsible to install all planting beds so they are continuous as identified on grading and landscape/planting plans.
2.. Backfill with mixture consisting of the following:
   90% Imported Topsoil (with necessary amendments per analysis)
   10% Organic compost (with necessary amendments per analysis)

B. Landscape Backfill Mix for Perennial Planting Areas (identified on Landscape Planting Plans):

1. **Excavate all perennial planting beds to a depth of 18" below finish grade.**
   Contractor is responsible to install all planting beds so they are continuous.
2. Backfill with mixture consisting of the following:
   90% Imported Topsoil (with necessary amendments per analysis)
   10% Organic compost (with necessary amendments per analysis)
3. Dispose of excess native site soil excavated from plant bed.

3.05 WEED CONTROL

A. Apply pre-emergent weed control to all areas to receive woody, non-lawn ornamental planting after amendment of topsoil.

B. Spray all weeds that may have established prior to planting or sodding operations with post emergent herbicide. If rain occurs within 6 hours of application, reapply the product. Wait at least 7 days after last application to rake, till, or re-plant.

C. Apply strictly according to manufacturer's current printed specifications.

3.06 DETRIMENTAL DRAINAGE, SOILS AND OBSTRUCTIONS

A. Notification: Submit in writing all soils or drainage conditions considered detrimental to growth of plant materials. State condition and submit proposal and cost estimate for correcting condition.

B. Correction: Submit for acceptance a written proposal and cost estimate for the correction before proceeding with work.

C. Obstructions: If rock, underground construction work, tree roots or other obstructions are encountered in the performance of work under this section, submit cost required to remove the obstructions to a depth of not less than 6 in. below the required soil depth.

3.07 CLEAN-UP

A. Keep all areas of work clean, neat and orderly at all times.

B. Clean up and remove all deleterious materials and debris from the entire work area prior to final acceptance.

PART 4 - PAYMENT

4.01 METHOD OF MEASUREMENT

A. The quantity of Special Provision Landscape Backfill will be paid on a cubic yard (CY) basis to install the landscape backfill material in the designated locations within the limits shown on the plans.

4.02 BASIS OF PAYMENT

A. The accepted quantity of Special Provision Landscape Backfill will be paid for at the Contract CY price. The landscape backfill, soil testing, amendments, and installation shall be paid for incidental to this pay item. The Landscape Backfill is meant for all planting areas as noted in the drawings and details.

Payment will be made under:

Pay Item	Pay Unit
900.608 Special Provision Landscape Backfill	CY

END OF SECTION

STONE FILL, STREAM BED MATERIAL

XX. DESCRIPTION. This work shall consist of furnishing and placing stone fill material inside of, as well as upstream and/or downstream of, a structure to facilitate aquatic organism passage and mimic the native channel

XX. MATERIAL. Stone Fill shall be approved, hard, blasted, angular rock other than serpentine rock containing the fibrous variety chrysotile (asbestos) supplemented with material excavated from the channel and/or the tailings of a topsoil screening operation, with gradation adjusted to conform to the following:

Type I. The longest dimension of the stone shall be at least 18 inches, and at least 50 percent of the volume of the stone in place shall have a least dimension of 12 inches, and at least 25 percent of the particles shall have a maximum dimension of 2 inches and be well graded material.

Type II. The longest dimension of the stone shall be at least 24 inches, and at least 50 percent of the volume of the stone in place shall have a least dimension of 18 inches, and at least 25 percent of the particles shall have a maximum dimension of 2 inches and be well graded material.

Type III. The longest dimension of the stone shall be at least 36 inches, and at least 50 percent of the volume of the stone in place shall have a least dimension of 24 inches, and at least 25 percent of the particles shall have a maximum dimension of 2 inches and be well graded material.

Type IV. The longest dimension of the stone shall be at least 48 inches, and at least 50 percent of the volume of the stone in place shall have a least dimension of 36 inches, and at least 25 percent of the particles shall have a maximum dimension of 2 inches and be well graded material.

Bed material shall be approved by the Engineer and the Agency of Natural Resources prior to use.

XX. PLACING. Stone fill shall be placed at as shown in the Plans. Place the stone such that it does not cause segregation or damage to the structure.

Fill in voids in the stone with a mixture of fines from the existing stream bed material. Fill voids by hand tamping with metal tamping rods, plate compactors, and water pressure with a metal wand to reach between stones.

Once all material has been placed in the stream channel, the Contractor shall slowly wet the stream to minimize the effects of the initial sediment pulse. Every attempt shall be made to minimize the movement of sediment downstream of the site.

There shall be no subsurface flow upon final inspection.

XX. METHOD OF MEASUREMENT. The quantity of Special Provision (Stone Fill, Stream Bed Material) to be measured for payment will be the number of cubic meters (cubic yards) installed in the complete and accepted work, measured within the limits shown on the Plans or as directed by the Engineer.

XX. BASIS OF PAYMENT. The accepted quantity of Special Provision (Stone Fill, Stream Bed Material) will be paid for at the Contract unit price per cubic meter (cubic yard). Payment will be full compensation for furnishing, transporting, and placing the material specified and for furnishing all labor, tools, equipment, and incidentals necessary to complete the work.

Payment will be made under:

Pay Item	Pay Unit
900.608 Special Provision (Stone Fill, Stream Bed Material)(TYPE I)	Cubic Meter (Cubic Yard)

LIGHTING CONTROL PANEL

DESCRIPTION. This work shall consist of furnishing, installing, and testing street lighting control panel(s) including foundations, cabinet, internal electrical components, power meter, and wiring, as shown in the Plans and as directed by the Engineer.

The work under this Section shall be performed in accordance with these provisions, the Plans, and Section 679 of the Standard Specifications.

MATERIALS. Materials shall meet the requirements of Section 679 and the following:

Prior to ordering any components, the Contractor shall submit Fabrication Drawings in accordance with Section 105. The submittal shall contain, as a minimum, the following information:

(a) Cabinet. Size, manufacturer, model, accessories, material, and finish.

(b) Concrete Foundation or aluminum post mount with foundation, including mounting hardware. Dimensions to match cabinet, reinforcing, and material.

(c) Electrical Components and Controls. Make, model, and applicable electrical capacities and settings.

CONSTRUCTION REQUIREMENTS. The Contractor shall coordinate the installation with the City of St Albans and/or Green Mountain Power which shall supply power at the source control cabinet in the St Albans Garage. The Contractor shall install conduit, sweeps, riser and wire to enable the power supply connection, which shall be made by the City of St Albans and/or Green Mountain Power.

METHOD OF MEASUREMENT. The quantity of Special Provision (Lighting Control Panel) to be measured for payment will be the number of each unit installed in the complete and accepted work.

BASIS OF PAYMENT. The accepted quantity of Special Provision (Lighting Control Panel) will be paid for at the Contract unit price per each. Payment will be full compensation for furnishing, transporting, handling, assembling, testing, and placing the materials specified, including foundations, anchors, grounding, receptacles, cabinet, mounting panels, internal electrical components, power meter, transformer(s), heat source, fan, light, and wiring, and for furnishing all labor, tools, equipment, and incidentals necessary to complete the work.

Payment will be made under:

Pay Item	Pay Unit
900.620 Special Provision (Lighting Control Panel)	Each

SECTION 900.620

SPECIAL PROVISION ORNAMENTAL STREET LIGHT

PART 1 – GENERAL

1.01 DESCRIPTION. This work shall consist of furnishing and installing ornamental street light poles, fixtures, lights, foundations, wiring, and all incidentals, as shown in the Plans and as directed by the Engineer.

The work under this Section shall be performed in accordance with these provisions, the Plans, and Section 679 of the Standard specifications.

1.02 MATERIALS. Materials shall be in accordance with Section 679 and the following requirements:

(a) Concrete: Concrete shall meet the requirements of Section541 for Concrete, Class B.

(b) Light Poles: Poles shall be decorative 12 fluted, mandrel formed, aluminum tapered shaft 6 & 7" round welded to a 6-5/8" round extruded aluminum pole base which is welded top and bottom to a cast aluminum anchor plate. The pole shall include a 4-1/2" x 10" maintenance opening. The pole shall have a 14 foot mounting height.

(c) Base Cover: The decorative base cover shall be made from two cast-aluminum pieces fastened together with stainless steel hardware around the base of the light pole. The base cover shall be complete with a door to access the pole maintenance opening.

(d) Finish: The light poles, bases, base covers and fixture adapters shall be a "black textured (BKTX)" surface treatment, thermosetting polyester resin based powder coating.

(e) Light Fixtures: The luminaires shall have a glass globe, with decorative base adaptor, with finials, with decorative band and vertical support. Each luminaire shall include a photoelectric cell. All Type B light fixtures will require a decorative twin mounting arm.

(f) Fixture/Lamps: The lamp wattage for the luminaires shall be 90-100watt LED with a kelvin rating of 4,500 or lower. The prismatic optical systems shall be asymmetrical prismatic glass globes with a Type III distribution. *Acrylic or polycarbonate globes are not acceptable.*

(g) Wiring: The Contractor shall provide and install all wiring for the proposed lighting system. The wire shall be copper, 600 volt insulated, type XHHW-2 to the gages specified on the contract plans.

(h) Banner Arms: The banner arms shall be able to accommodate banners that are 24"x48". The banners arms shall be designed to fit on a fluted pole, using a central tubing insert through two opposite holes. All connecting hardware should be stainless steel. Bottom banner arm is to be a breakaway arm.

(i) Duplex Receptacle: The light fixture/pole shall include a 120V duplex receptacle with common ground fault interrupter.

(j) Plant Support Arm: The 16" plant support arm shall be designed to fit on a fluted pole, using a central tubing insert through two opposite holes. Provide a 1/2" eyebolt set 3" back from the end of the support arm. All connecting hardware should be stainless steel.

Manufacturer Ordering Summary

The ordering information for equivalent ornamental street lights for Fixture Typed A and B are as follows:

This will require a Public Interest Finding

Lumec Lighting – Fixture A:

Luminaire	S56 Serenade (Glass Globe)
LED Wattage	80W48LED
Lamp Temperature	4,000K
Optical System	LE3
Voltage	208
Adapter	SFX
Options	FN10 (Finial), PH8 (Photocell), C2 (Decorative band)
Pole	RTA906V-14
Pole Options	GFI
Banner Arms	BASB(2)24 (Two Arms; spaced to accommodate 48" banner)
Plant Support Arm	PSS (Single plant support)
Finish	BKTX (Black textured)

Lumec Lighting – Fixture B:

Luminaire	S56 Serenade (Glass Globe)
LED Wattage	80W48LED
Lamp Temperature	4,000K
Optical System	LE3
Voltage	208
Adapter	SFX
Options	FN10 (Finial), PH8 (Photocell), C2 (Decorative band)
Pole	RTA906V-16
Pole Options	GFI
Banner Arms	BASB(2)24 (Two Arms; spaced to accommodate 48" banner)
Plant Support Arm	PSS (Single plant support)
Finish	BKTX (Black textured)

LUMEC
www.lumec.com

Local Contact/Sales Representative:
Apex Lighting
1200 Elm Street. Unit 412
Manchester, NH 03101
Dan Carnevale
dcarnevale@apexltg.com

PART 2 - EXECUTION

2.01 CONSTRUCTION REQUIREMENTS.
The Contractor shall submit manufacturer's descriptive literature for materials specified in accordance with 105.03.

Transport, storage, and handling of products shall be in accordance with manufacturer's instructions.

Ornamental light poles shall only be installed in the locations specified on the plans and in accordance with manufacturer's instructions.

2.02 SUBMITTALS.
The Contractor shall submit shop drawings of light fixture, pole, banner arms and plant support arm for review and approval by Resident Engineer. All manufacturer warrantee information on the materials that are provided shall be included with the submittal and shall be conveyed to the City and backed by the Contractor for the durations provided by the manufacturer.

PART 3 - PAYMENT

1.04 METHOD OF MEASUREMENT. The quantity of Special Provision (Ornamental Light) will be measured by the number of units installed, complete with all poles, light fixtures, lamps, anchors, grounding, receptacles, wiring, photocells, banner arms, plant supports, accessories and incidentals. Conduit, concrete pole bases, pull boxes and lighting conduit will be measured and paid separately.

1.05 BASIS OF PAYMENT. The accepted quantity of Special Provision(Ornamental Light) will be paid for at the Contract unit price per each. Payment will be full compensation for furnishing, transporting, handling, assembling, and placing the materials specified.

Payment will be made under:

Pay Item		Pay Unit
900.620	Special Provision (Ornamental Street Light-Fixture A)	Each
900.620	Special Provision (Ornamental Street Light-Fixture B)	Each

END OF SECTION

SECTION 900.620

SPECIAL PROVISION RECYCLING TRASH RECEPTACLE

PART 1 - GENERAL

1.1 SUMMARY

A. This Section includes the following:

1. Recycling Trash Receptacle

1.2 SUBMITTALS

A. Product Data: For each product indicated.

B. Samples: For exposed finish and color specified.

C. Text: Font options for Recycling information on lid and side of receptacle.

D. Shop Drawings

PART 2 - PRODUCTS

2.1 MANUFACTURERS

A. In other Part 2 articles where subparagraph titles below introduce lists, the following requirements apply for product selection:

1. Products: Subject to compliance with requirements, provide products from one of the manufacturers specified.

2.2 MATERIALS

A. Steel: Bid and Contract Procedures Buy America provisions for all steel and iron products.

1. Plates, Shapes, and Bars: ASTM A 36/A 36M.
2. Baked-Enamel, Powder-Coat Finish: Manufacturer's standard, baked, polyester-TGIC, powder-coat finish complying with finish manufacturer's written instructions for surface preparation, including pretreatment, application, baking, and minimum dry film thickness.

B. Anchors, Fasteners, Fittings, and Hardware: Commercial quality; tamperproof, vandal and theft resistant**;** concealed, recessed, and capped or plugged. Provide as required for site furnishings' assembly, mounting, and secure attachment.

1. Material: Manufacturer's standard, corrosion-resistant-coated or non-corrodible materials.

2.3 TRASH RECEPTACLES

A. Products:
1. 24 Gallon Receptacle w/ Recycling Signage (refer to detail)
Manufacturers:
a. Victor Stanley
b. DuMor Inc.
c. Landscape Forms
d. Or Approved equal

B. Installation Method: As indicated on Drawings. Comply with all manufacturers recommendations.

C. Finish: Powder Coated.

1. Color: Black

PART 3 - EXECUTION

3.1 INSTALLATION

A. Unless otherwise indicated, install recycling trash receptacles after landscaping and paving have been completed.

PART 4 – PAYMENT

4.1 METHOD OF MEASUREMENT

A. The quantity of Special Provision Recycling Trash Receptacle will be paid on an each (EA) basis to install the trash receptacles in the designated locations within the limits shown on the plans.

4.2 BASIS OF PAYMENT

A. The accepted quantity of Special Provision Recycling Trash Receptacle will be paid for at the Contract EA price. The trash receptacles, installation, and all necessary anchoring materials shall be paid for incidental to this pay item.

Payment will be made under:

Pay Item	Pay Unit
900.620 Special Provision Recycling Trash Receptacle	EA

END SECTION

SECTION 900.620

SPECIAL PROVISION TRASH RECEPTACLE

PART 1 - GENERAL

1.1 SUMMARY

A. This Section includes the following:

1. Trash Receptacle

1.2 SUBMITTALS

A. Product Data: For each product indicated.

B. Samples: For exposed finish and color specified.

C. Shop Drawings

PART 2 - PRODUCTS

2.1 MANUFACTURERS

A. In other Part 2 articles where subparagraph titles below introduce lists, the following requirements apply for product selection:

1. Products: Subject to compliance with requirements, provide products from one of the manufacturers specified.

2.2 MATERIALS

A. Steel: Bid and Contract Procedures Buy America provisions for all steel and iron products.

1. Plates, Shapes, and Bars: ASTM A 36/A 36M.
2. Baked-Enamel, Powder-Coat Finish: Manufacturer's standard, baked, polyester-TGIC, powder-coat finish complying with finish manufacturer's written instructions for surface preparation, including pretreatment, application, baking, and minimum dry film thickness.

B. Anchors, Fasteners, Fittings, and Hardware: Commercial quality; tamperproof, vandal and theft resistant**;** concealed, recessed, and capped or plugged. Provide as required for site furnishings' assembly, mounting, and secure attachment.

1. Material: Manufacturer's standard, corrosion-resistant-coated or non-corrodible materials.

2.3 TRASH RECEPTACLES

A. Products:
1. 36 Gallon Receptacle w/ Steel Formed Dome Top (refer to detail)
Manufacturers:
a. Victor Stanley
b. DuMor Inc.
c. Landscape Forms
d. Or Approved equal

B. Installation Method: As indicated on Drawings. Comply with all manufacturers recommendations.

C. Finish: Powder Coated.

1. Color: Black

PART 3 - EXECUTION

3.1 INSTALLATION

A. Unless otherwise indicated, install trash receptacles after landscaping and paving have been completed.

PART 4 – PAYMENT

4.1 METHOD OF MEASUREMENT

A. The quantity of Special Provision Trash Receptacle will be paid on an each (EA) basis to install the trash receptacles in the designated locations within the limits shown on the plans.

4.2 BASIS OF PAYMENT

A. The accepted quantity of Special Provision Trash Receptacle will be paid for at the Contract EA price. The trash receptacles, installation, and all necessary anchoring materials shall be paid for incidental to this pay item.

Payment will be made under:

Pay Item	Pay Unit
900.620 Special Provision Trash Receptacle	EA

END SECTION

MAINTENANCE OF PEDESTRIAN TRAFFIC

1. DESCRIPTION. This work shall consist of establishing and maintaining pedestrian traffic and accessibility measures to protect pedestrians and assist pedestrians of all abilities traveling through and within the project limits.

2. CONSTRUCTION REQUIREMENTS. The Contractor shall provide measures that establish and maintain Temporary Pedestrian Access Routes (TPAR) through the work zones in compliance with the most current Americans with Disabilities Act Accessibility Guidelines (ADAAG) and Public Right of Way Accessibility Guidelines (PROWAG). The various devices and/or features shall be installed in a uniform manner to provide a consistent accessible route for pedestrians through the work zones.

   The Contractor shall follow the 2009 Federal MUTCD PART 6 Standards and Guidance for Pedestrian and Worker Safety and TTC Devices.

   When existing pedestrian facilities are disrupted, closed, or relocated in a construction zone, the temporary pedestrian accommodation facilities shall be detectable and shall include accessibility features consistent with the features present in the existing pedestrian facility. Pedestrian access shall be maintained to existing Lake Street businesses. The Contractor shall provide ADA compliant temporary pedestrian walk surfaces to business entrances during sidewalk reconstruction operations or other operations that would otherwise inhibit access.

   The Contractor shall refer to figure 6H-28 – "Sidewalk Detour or Diversion", and figure 6H-29 – "Crosswalk Closures and Pedestrian Detours (TA-29)" in the 2009 MUTCD for guidance on managing pedestrians in the vicinity of work zones within sidewalk areas. The Contractor shall provide as a minimum these levels of temporary pedestrian signing and protection measures for this project. The Contractor shall provide a Temporary Pedestrian Access Route plan to the Engineer for review and approval prior to the construction.

   Temporarily installed or relocated crosswalks shall include temporary ADA accessible curb ramps, including detectable warning devices (truncated domes) to access sidewalks.

3. METHOD OF MEASUREMENT. The quantity of Special Provision (Maintenance of Pedestrian Traffic) to be measured for payment will be on a lump sum basis for providing temporary pedestrian traffic control and accessibility measures throughout the duration of the project.

4. BASIS OF PAYMENT. The accepted quantity of Special Provision (Maintenance of Pedestrian Traffic) will be paid for at the Contract lump sum price. Partial payments will be made as follows:

   (a) The first payment of 10 percent of the lump sum price upon initiation of work in the first bi-weekly estimate.

   (b) Prorated payments of 10 percent of the lump sum price every 4 weeks or two bi-weekly estimates after the original payment pending

approval of the engineer based on progress and duration of work remaining.

Payment will be full compensation for preparing, implementing, inspecting, maintaining, adjusting, and removing the applicable pedestrian traffic control plan and necessary pedestrian traffic control devices; materials and measures required to protect pedestrians and to maintain pedestrian access routes through the project at all times; installing, adjusting, relocating, and removing aids to pedestrian accessible routes, including channelizing devices, handrails, detectable edging, temporary curb ramps, detectable warning devices, temporary pedestrian signing, and pavement markings; and for furnishing all labor, tools, equipment, and incidentals necessary to complete the work.

Payment will be made under:

Pay Item	Description	Pay Unit
900.645	**Special Provision (Maintenance of Pedestrian Traffic)**	**Lump Sum**

CONSTRUCTION VIBRATION AND CRACK MONITORING

1. Description. This work shall consist of the installation of vibration monitoring devices to record pre-construction vibration conditions within the project work corridor and facilitate vibration monitoring during construction to evaluate and assess screening of construction equipment that may create excessive disturbance to surrounding buildings and structures and restricts their use. It also includes the installation of crack monitoring equipment at locations of concern with existing pre-construction damage or locations that develop damage and cracks as a result of new construction. It also identifies the Contractor's responsibilities for protecting the properties in and around all work zones from possible damage during construction. Vibration producing activities such as blasting, pile driving, vibratory compaction, pavement breaking or operation of heavy construction equipment required for the construction of this project have the potential for creating damage to surrounding infrastructure. The Contractor is advised that structures are located in close proximity to the proposed work and that construction activities shall be conducted so as to preclude damage to these structures. The Contractor is responsible for all damage caused by their activities.

2. Materials. The Contractor shall provide amplitude/frequency vibration monitors capable of measuring, recording and producing a hard copy of the frequency and peak particle velocity in three mutually perpendicular axes. ("Vector sum" instruments are not acceptable). These instruments shall be capable of measuring Linear Scale (dB-L) sound levels.

   The Contractor shall provide crack monitoring equipment from the following or approved equal.

   Tell-Tale Crack monitors, RST Instruments Ltd. 800-665-5599, www.rstinstruments.com

   Crack monitoring Equipment, Geotest Instrument Corp., 866-430-7645, www.crackgauge.com

   Avongard Crack Monitor, Avongard Products U.S.A.,800-244-7241, www.avongard.com

3. Monitoring Criteria.

   (a) The Contractor shall provide the services of a qualified geotechnical consultant to monitor the vibrations along active work zones and any crack monitoring identified as necessary during pre-construction building inspections or created by current construction. The geotechnical consultant shall have at least 5 years of verifiable experience in conducting vibration and structure monitoring.

   (b) The Contractor shall provide a description of their proposed construction methods including amplitude descriptions of each vibration producing activity, and a vibration monitoring plan for

each activity including the format for reporting the vibration readings. A minimum of two construction vibration monitoring devices will be placed within or along each active construction zone. These devices shall be placed at locations nearest buildings or structures closest active construction to optimize evaluation and assessment of potential damage to surrounding features. A minimum of two additional devices will be required along each work zone where buildings are continuous or more than four buildings exist within 25 feet of a work zone. Additional devices may be required as directed by the Engineer.

(c) If the Contractor's construction means and methods create ground vibrations that result in damage to surrounding buildings or structures, the Engineer will direct that all activities related to those causing the vibration be stopped. The Engineer may also, at any time, halt construction activities if vibration levels exceed Maximum PPV for Continuous/Frequent Intermittent Sources for Surrounding Structures and Features as indicated in the Transportation and Construction Induced Vibration Guidance Manual (www.dot.ca.gov/hq/env/noise/pub/vibrationmanFINAL.pdf). or that indicate the potential to damage surrounding buildings and structures. In the event of work being stopped as a result of ground vibrations, the Contractor shall submit to the Engineer a report giving the construction parameter data and include the proposed corrective action for future construction events. In order to proceed with any further vibration producing activities, written permission must be obtained from the Engineer.

(d) Vibration monitoring equipment shall be capable of continuously recording the peak particle velocity and providing a permanent record of the entire vibration event. Copies of all vibration records and associated construction activity (blasting, pile driving, pavement breaking, compaction, etc.) data shall be provided to the Engineer in format approved by the Engineer.

(e) The consultant shall measure the magnitude of each vibration event with at least two vibration instruments, generally located adjacent to the closest or most critical structures. The vibration monitors shall be amplitude and frequency sensitive and shall be operated during vibration producing activities that produce measurable ground vibrations. In the event that the Contractor chooses to have concurrent vibration producing activities at more than one location adjacent to buildings, the Contractor shall notify the Engineer prior to the commencement of such activities. The Engineer may require additional vibration monitoring instruments at each location depending on site parameters. No vibration producing activities may be started until the appropriate instrumentation is provided by the Contractor and approved by the Engineer.

(f) All vibration instruments shall be powered with rechargeable batteries, and the Contractor shall supply extension geophone and microphone cables so that the instruments can be placed within structures if outside temperatures drop below 32 degrees Fahrenheit.

(g) All vibration instruments shall be supplied with current calibration documents and shall be recalibrated on approximately a six-month use interval. At a minimum, instrument specific calibration curves of peak particle velocity input to peak particle velocity output shall be provided over the specified frequency ranges at both 0.5 and 1.0 ips for each instrument.

(h) The Contractor shall be responsible for instrument maintenance. If the Contractor does not maintain a sufficient number of instruments to monitor the buildings/structures adjacent to the vibration producing activity, the Engineer may direct that all vibration activities cease until a sufficient number are working. Recording tape shall be supplied by the Contractor and at least a two-week supply maintained. The Contractor shall designate an individual in his organization or under contract to him, who will be responsible for instrument coordination. The Contractor's consultant will be responsible for placing the instruments at measuring locations designated in the monitoring plan, and reading and recording the pertinent vibration event data.

(i) Crack displacement monitoring gages will be installed as appropriate across any significant existing cracks in buildings or structures identified and deemed necessary by the Contractor and Engineer during the Pre-Construction Building Inspections and agreed to by the Property Owner. Initial readings shall be taken before any excavation or vibration inducing activities. The consultant shall take and record readings of all instrumentation a minimum of once per week during the performance of the work and a report shall be provided to the engineer within 24 hours of completing the readings.

(j) The Contractor shall also be required to install additional crack monitoring devices as necessary and directed by the Engineer as a result of cracks that are identified or develop during construction.

(k) Pre-Construction vibration monitoring devices shall be placed along Lake Street to record existing vibration levels at the following locations:

Station 40+50 Right
Station 41+00 Left
Station 42+00 Right
Station 44+50 Left and Right

These devices will be required to record both peak AM (6:30 – 8:30) and peak PM (3:30 – 5:30) disturbances for three continuous days. A full report of this information will be provided to the Engineer prior to any construction activities beginning.

4. Submittals. The Contractor shall submit their proposed construction vibration and settlement monitoring plan for the structural health of the buildings and structures listed herein to the Engineer for review and

approval in accordance with Section 105, 7 days before the start of any trench excavation or vibration producing activities would occur within 100 feet of buildings. The submittals shall include the following:

(a) Qualifications and procedures for the detection of movement and vibrations as specified under Monitoring Criteria.

(b) Protection measures for existing structures and facilities, instrumentation and monitoring procedures to check vibration levels and monitor any damage or settlement of structures.

(c) Contingency plans for excessive wall or foundation movement.

5. Public Relations. The Contractor is required to contact residents and owners or operators of the buildings along Lake Street or within 100 feet of active construction work zones. This contact will be made prior to the beginning of any vibration producing activity. The Contractor shall furnish a list of those contacted to the Engineer.

   The Contractor shall maintain a complaint log of all vibration related complaints, contacts and actions, and shall furnish copies to the Engineer on request.

6. Method of Measurement. The quantity to be measured for payment will be on a lump sum basis for Construction Vibration and Crack Monitoring.

7. Basis of Payment. Payment of Construction Vibration and Crack Monitoring will be made as follows:

   A payment of 10% of the lump sum bid price will be made at the time of the first bi-weekly estimate.

   A payment of 10% of the lump sum bid price will be made every month thereafter or prorated as necessary based on construction schedule.

Payment will be made under:

Pay Item		**Pay Unit**
900.645	**Special Provision (Construction Vibration and Crack Monitoring)**	**Lump Sum**

CONTRACTOR-FABRICATED PRECAST CONCRETE STRUCTURE

XX. DESCRIPTION. This work shall consist of manufacturing, transporting, handling, and erecting precast concrete structure components fabricated by the Contractor at a location other than a Precast Concrete Institute (PCI) or National Precast Concrete Association (NPCA) certified precast concrete facility.

XX. MATERIALS. Materials shall meet the requirements of Subsections 501.02, 507.02, and 540.02.

(a) Concrete. Concrete shall meet the requirements of Subsection 540.05, with the exception that the requirements of part (a) do not apply. In lieu of a mix meeting the requirements of Subsection 540.05, the Contractor may provide a mix meeting the requirements of Section 501 for Concrete, High Performance Class A or Concrete, High Performance Class B, provided that the design strength as shown in the Plans as well as that required for lifting and handling is met.

XX. GENERAL FABRICATION REQUIREMENTS. Unless noted otherwise herein, Contractor-fabricated Precast Concrete (CFPC) produced and paid under this Special Provision shall meet the requirements of Sections 501, 507, and 540.

XX. SUBMITTALS. As soon as practical after award of the Contract, all required information shall be prepared and submitted. Fabrication drawings, mix designs, and erection plans shall be submitted as separate submittals.

If the contractor proposes a different configuration than what is provided in the contract plans then a complete copy of the structural design calculations for the CFPC shall be submitted accompanying / with Construction Drawings in accordance with Section 105. The design calculations shall substantiate that the proposed precast concrete satisfies the design parameters of the Contract. The applicable design code will be the latest edition of the AASHTO LRFD Bridge Design Specifications unless indicated otherwise in the Contract Documents.

Fabrication Drawings for the precast concrete shall be submitted in accordance with Section 105, with an additional copy to the Composite Materials Engineer. In addition to the requirements for Fabrication Drawings in Section 105, the following shall be included:

(a) Dimensions and tolerances of the precast concrete to be fabricated.

(b) The concrete mix design, including but not limited to the following:

(1) Batch weights specifying dry or saturated surface dry.

(2) Material names and sources.

(3) Aggregate properties and date tested.

(4) Chemical and physical properties of cementitious material.

(5) Admixture names and sources.

(6) Lab data that shall include, but not be limited to:

a. Slump.

b. Air Content.

c. Temperature.

d. Ratio of Water/Cementitious Material.

e. Cylinder breaks for 28 days standard cured.

f. 56-day Rapid Chloride Ion Permeability – AASHTO T 277 test data. The results shall be the average from testing 3 specimens, but the individual specimen results shall also be included. Testing shall be performed by an independent laboratory accredited by AMRL in this test method.

g. Alkali-Silica Reactivity (ASR) – AASHTO T 303 data from testing of both the fine and coarse aggregates. Testing shall be performed by an independent laboratory accredited by AMRL in this test method.

(7) Alkali-Silica Reactivity (ASR). If potentially reactive aggregates are to be used in a mix design, then proposed mitigation method(s) and test results must be provided. The AASHTO T 303 test must be run again with the proposed mitigation method(s) and using the proposed job cementitious material proportioning. The proposed mitigation method(s) shall reduce expansion to below 0.10%.

If a mix design, including the testing results, has been submitted and approved within a 12 month period, it may be used in lieu of submitting an additional mix design. However, if any change in the material sources, properties, or proportions has occurred, then a new mix design with lab test data will be required regardless of previous approval. The requirements for testing in Subsections 540.04(b)(6)f, 540.04(b)(6)g, and 540.04(b)(7) above shall be waived if the submitted mix design has a minimum proportion of the cementitious material content of that allowed for use in High Performance Concrete in Section 501.

The mix design shall be approved by the Composite Materials Engineer prior to fabrication.

(c) The sources and properties of the materials proposed for use.

(d) The reinforcement schedule, placement of reinforcing steel, welded wire fabric, mechanical bar connectors, and inserts.

(e) The type of surface finish and how the finish will be obtained. Include details of potential repair procedures.

(f) The curing method, detailing sequence, and duration.

(g) The minimum required concrete strength for design strength and form removal.

(h) The design of the lifting attachments.

(i) Transportation, handling, and storage details along with calculations to substantiate the proposed CFPC units will not be cracked/damaged by handling and/or transport.

(j) The installation procedures, including a detailed grouting procedure.

(k) A Quality Control Plan that identifies a Quality Control Manager and provides previous experience for work of this nature. A Description of Quality Control Processes addressing but not limited to:

(1) Concrete production including batching, delivery, and placement.

(2) Formwork.

(3) Reinforcing.

(4) Concrete finishing.

(5) Concrete cure.

(6) Shipping/Installation procedures.

XX. INSPECTION. Materials furnished and the work performed herein shall be inspected by the Agency. The Agency will test all concrete incorporated into the work in accordance with Section 501. The inspector shall have the authority to reject any material or work that does not meet the requirements of the Specifications. Advance notification of at least two (2) weeks shall be provided by the Contractor to the Agency's Engineer and the Composite Materials Engineer concerning the proposed intention to commence work. A minimum of five (5) working days notification shall be provided by the Contractor to the Agency's Engineer and the Composite Materials Engineer to confirm the fabrication start date.

Prior to placing any precast concrete elements produced under these Specifications, all materials shall have all applicable certifications approved in accordance with Subsection 700.02.

XX. FABRICATION.

(a) Pre-Production Meeting. Unless the Engineer deems, in writing, that a pre-production meeting is unnecessary, then a pre-production meeting shall be held a minimum of seven (7) calendar days prior to beginning concrete placement. The pre-production meeting shall be attended by, as a minimum but not limited to, the Crew Supervisor, Contractor Project Manager, Concrete

Producer, Resident Engineer, Project Manager, and Composite Materials Engineer.

(b) Placing Concrete. Concrete placement shall be in accordance with Subsection 501.10 and as specified herein. Concrete shall not be deposited in the forms until the appropriate Agency representative has approved placement of the reinforcement, conduits, and anchorages.

(c) Repairs/Patching. CFPC structure components that contain minor defects caused by manufacture or handling may be repaired at the manufacturing site. Minor defects are defined as holes, honeycombing, or spalls which are 150 mm (6 inches) or less in diameter and that do not penetrate deeper than 25 mm (1 inch) into the concrete. Surface voids or "bugholes" that are less than 16 mm (5/8 inch) in diameter and less than 6 mm (1/4 inch) deep need not be repaired. Repairs shall be made using a material from the Agency's Approved Products List for overhead and vertical concrete repair. The repair material shall be cured as specified by the manufacturer. Repairs shall be approved by the Engineer.

(d) Cracking. Cracks less than 0.25 mm (0.01 inch) in width shall be sealed by a method approved by the Engineer. Cracks in excess of 0.25 mm (0.01 inch) may be cause for rejection. At the Engineer's discretion, cracked CFPC structure components shall be repaired or replaced at the Contractor's expense.

(e) Dimensional Tolerances. All tolerances shall be in accordance with the latest editions of both PCI MNL 116 *Manual for Quality Control for Plants and Production of Precast and Prestressed Concrete Products* and PCI MNL 135 *Tolerance Manual for Precast and Prestressed Concrete Construction*, or with the National Precast Concrete Association (NPCA) *Quality Control Manual for Precast Concrete*, unless otherwise noted in the Contract Documents or as approved by the Engineer.

(f) Marking. The date of manufacture, the production lot number, and the piece mark shall be clearly marked on each individual piece of precast concrete. The mark shall be in a location that will not be visible in the finished product.

XX. HANDLING, STORAGE, AND SHIPPING. Each CFPC structure shall be handled, stored, and shipped in such a manner as to minimize chipping, cracks, fractures, discoloration, and excessive bending stresses. A unit damaged by handling, storage, or shipping shall be replaced at the Contractor's expense.

A CFPC structure shall not be installed until the respective unit has been inspected. This inspection shall verify that the pieces are free from defects, and that all specification requirements, including but not limited to those for compressive strength and tolerance requirements, have been achieved. In addition, a CFPC structure will not be considered for shipment until the completion of the cure period and the required strength has been attained as demonstrated by field-cured cylinder breaks.

XX. INSTALLATION METHODS, EQUIPMENT, AND ERECTION. Cranes, lifting devices, and other equipment for CFPC structure erection shall be of adequate design and capacity to safely erect, align, and secure all members and components in their final positions without damage. The Contractor is solely responsible for the methods and equipment employed for the erection of the CFPC structure components.

Construction Drawings for CFPC structure component erection shall be submitted in accordance with Section 105. The erection plan shall include the necessary computations to indicate the magnitude of stress in the units during erection and to demonstrate that all of the erection equipment has adequate capacity for the work to be performed, and provisions for all stages of construction, including temporary stoppages.

Post tensioning shall comply with Subsection 540.12.

Submittal of the erection plan is for the Agency's documentation only and shall in no way be construed as approval of the proposed method of erection. The Contractor shall follow the erection plan as submitted.

XX. GROUT.

(a) Unless otherwise noted grout shall be used to fill shear keys, leveling screw voids, transverse tie anchor recesses, dowel holes, and for fairing joints as detailed in the Contract Documents or as ordered by the Engineer.

Grout shall be Mortar, Type IV. Acceptable grout materials shall be those included on the Approved Products List on file with the Agency's Materials and Research Section. Additional aggregates shall not be added to the material during field mixing.

The Contractor, with written permission from the Engineer, has the option to use ready-mixed mortar for the grouting process. The Contractor shall prepare and submit for approval the mix design for the grout. The maximum quantity that may be delivered in a single load is one cubic meter (1.25 cubic yards), which shall be delivered and placed within the time limits specified by the manufacturer.

For testing, 6 neat 50 mm (2 inch) cubes shall be molded and cured in accordance with AASHTO T 106 (ASTM C 109). The average compressive strength of 3 cubes shall be a minimum of 7 MPa (1000 psi) at 3 days and a minimum of 35 MPa (5000 psi) at 28 days.

(b) The surface to be grouted shall be thoroughly cleaned, wetted, and free of all standing water. The grout shall be mixed using a mechanical mixer according to the manufacturer's recommendations and shall be readily pourable so that it completely fills the shape of the shear keys or holes, depending on the product being installed. The placement of grout shall be continuous so as to produce a monolithic key absent of any voids or cold joints.

(c) All exposed grout shall be cured for a period of no less than three days by the wetted burlap method in accordance with Section 501. Curing shall commence as soon as practical after grout placement.

XX. METHOD OF MEASUREMENT. The quantity of Special Provision (Contractor-Fabricated Precast Concrete Structure) of the type and size specified to be measured for payment shall be on a lump sum basis. The lump sum shall include all of the CFPC structure components in the complete and accepted work for each location specified in the Contract.

XX. BASIS OF PAYMENT. The accepted quantity of Special Provision (Contractor-Fabricated Precast Concrete Structure) of the type and size specified will be paid for at the Contract lump sum price. Payment shall be full compensation for designing, detailing, fabricating, repairing, transporting, handling, and erecting the materials specified, for furnishing and implementing the erection plan, and for furnishing all labor, tools, equipment, and incidentals necessary to complete the work.

Any grouting work, such as fairing out unevenness between adjacent precast concrete structure components and filling leveling screw holes, shear keys, transverse anchor recesses, and dowel holes, is considered incidental to the work for Special Provision (Contractor-Fabricated Precast Concrete Structure).

Payment will be made under:

Pay Item	Pay Unit
900.645 Special Provision (Contractor-Fabricated Precast Concrete Structure)(Abutment #1)	Lump Sum
900.645 Special Provision (Contractor-Fabricated Precast Concrete Structure)(Abutment #2)	Lump Sum
900.645 Special Provision (Contractor-Fabricated Precast Concrete Structure)(Approach Slab #1)	Lump Sum
900.645 Special Provision (Contractor-Fabricated Precast Concrete Structure)(Approach Slab #2)	Lump Sum

MAINTENANCE OF RAILROAD TRAFFIC

1. DESCRIPTION. This work shall consist of maintaining railroad traffic and coordinating with the City and the Railroad for inspection and review of the Contractor's work in conjunction with construction operations to be performed within the Railroad right-of-way, in accordance with the Contract Documents and as directed by the Engineer.

2. GENERAL REQUIREMENTS. When, as stipulated in the Contract Documents, or in the opinion of the Engineer and the Chief Engineering Officer of the Railroad, the construction work would cause hazard to the safe operation of trains and other facilities of the Railroad, including signal and communication lines, the Railroad will furnish the necessary qualified employees to protect their trains and other facilities. Protection services will be required whenever the Contractor is performing work over, under, or adjacent to the railroad tracks or right-of-way such as excavation, sheeting, shoring, erection, or removal of forms; handling material; using equipment which by swinging or by failure could foul the track; and when any other type of work being performed, in the opinion of the Railroad, requires such service.

   The Contractor is advised that although the cost for protective services will be paid for on a lump unit basis by the City, the Contractor shall be required to plan, coordinate, and organize the work effort in a way that shall absolutely minimize the use and number of railroad protective personnel required. The City and a Railroad representative will review and approve all Contractor work schedules prior to the commencement of work and prior to the assignment of protective personnel. Misuse of these protective services by the Contractor due to inadequate work procedures will not be allowed and shall be sufficient cause for the City to require the Contractor to bear all inappropriate costs.

   All existing signs, markers, and other informational indicators associated with the operations of the City or the Railroad that are removed by the Contractor in the performance of this work shall be preserved and reinstalled as soon as possible. Reinstallation shall precede any train operation at the same locations as they are removed. Any sign, marker, or other information indicator that is damaged by the Contractor's operations shall be considered a charge against the Contractor and shall be paid for by the Contractor or deducted from any monies due or that may become due the Contractor under this Contract.

Railroad traffic shall be maintained at all times with safety and continuity, and the Contractor shall conduct all operations on or over the railroad right-of-way fully within the rules, regulations, and requirements of the City and the Railroad. The Contractor shall be responsible for becoming acquainted with such requirements as the Railroad and/or City demands.

Existing train operations may include, but are not limited to, the following:

(a) Regularly scheduled passenger trains.

(b) Regularly scheduled freight trains.

(c) Other unscheduled trains or equipment being moved by the various Railroads.

3. SUBMITTALS.

(a) At the preconstruction meeting, the Contractor shall submit for approval by the City a detailed description of proposed methods for accomplishing the construction work required under the Contract, to include methods for protecting Railroad traffic. Approval by the City shall not serve in any way to relieve the Contractor of complete responsibility for the adequacy and safety of the proposed methods.

(b) Prior to beginning work, the Contractor shall submit for the approval of the Engineer a detailed description of the procedure(s) for work to be performed over, under, within, or adjacent to the Railroad right-of-way. Work shall not proceed until the proposed procedure(s) have been approved by the City.

4. CONSTRUCTION REQUIREMENTS. The Contractor shall obtain verification of the time and schedule of track occupancy from the Railroad before proceeding with any construction or demolition work over, under, within, or adjacent to the Railroad right-of-way.

All work to be done under, upon, or over the Railroad right-of-way shall be performed by the Contractor in a manner satisfactory to the Engineer and shall be performed at such times and in such manner as to not interfere with the movement of trains or traffic upon the tracks. The Contractor shall use all necessary care and precaution to avoid accidents, delay, or interference with the trains or other property. The Contractor shall give notice to the Railroad at least fifteen (15) days prior to the commencement of any work, or any portion of the work, over or adjacent to the Railroad right-of-way, so that necessary arrangements can be made promptly by the Railroad to protect railroad traffic.

The Contractor shall conduct the work and handle equipment and materials so that no part of any equipment should foul an operated track or wire line without the written permission of the Railroad. When it is noted that the work will foul an operating track, the Contractor shall give the Railroad written notice fifteen (15) days in advance so that, if approved, arrangements can be made for proper protection of the railroad.

Cranes, shovels, or any other equipment shall be considered to be fouling the track when located in such position that failure of same, with or without load, brings the equipment within the fouling limit.

Equipment of the Contractor to be used adjacent to the tracks shall be in first-class condition so as to fully prevent failures of defective equipment that might cause delay in the operation of trains or damage to Railroad facilities. The Contractor's equipment shall not be placed or put into operation adjacent to tracks without first obtaining permission from the Railroad. Under no circumstance shall any equipment or materials be placed or stored within 25 feet from the centerline of the track, unless otherwise directed.

Materials and equipment belonging to the Contractor shall not be stored adjacent to tracks without first obtaining permission from the Railroad. The City and/or Railroad will not be liable for damage to such materials and equipment from any cause. The Contractor shall keep the tracks adjacent to the site clear of all refuse and debris and shall leave the property in the condition existing before the start of construction operations.

The Contractor shall consult with the Railroad to determine the type of protection required to ensure safety and continuity of Railroad traffic incidental to the particular methods of operation and equipment to be used in the work. Any Construction Inspectors, track foremen or track watchmen, signalmen, or other employees deemed necessary for protective services by the Railroad, or its duly authorized representative to ensure the safety of trains contingent upon the Contractor's operations, shall be obtained from the Railroad by the Contractor.

The providing of such watchmen and other precautionary measures shall not, however, relieve the Contractor from liability for payment of, damages caused by the Contractor's operations.

5. FLAGGING AND PROTECTIVE SERVICES. The Contractor shall make all arrangements with the City and the Railroad, as applicable, for railroad employees required for flagging and protective services.

Railroad flaggers shall be furnished in accordance with Section 630.

6. METHOD OF MEASUREMENT. The quantity of Special Provision (Maintenance of Railroad Traffic) (N.A.B.I.) to be measured for payment will be on a lump unit basis for the specified railroad flagging and protective services provided.

7 BASIS OF PAYMENT. Payment for Special Provision (Maintenance of Railroad Traffic) (N.A.B.I.) will be as follows:

(a) A lump unit of Eighty Seven thousand dollars ($87,000) has been included in the bid proposal for flagging and protective services. Payment will be for reimbursing the Contractor for the actual invoice amounts paid to the Railroad by the Contractor for flagging and protective services. The Contractor shall submit four copies of paid receipted itemized bills from the Railroad for the flagging and protective services charges to the City for review and approval. The Contractor's overhead will not be reimbursed.

(b) The lump unit will be adjusted to the actual amount paid to the Railroad for flagging and protective services, after review and approval of paid invoices.

No additional payment will be made under this Contract item. All other costs for coordination and maintenance of rail traffic in accordance with these provisions will be considered incidental to Special Provision (Maintenance of Railroad Traffic) (N.A.B.I.).

If the Contract is not completed within the specified time limit for completion of the Contract (or authorized extended time), no payment will be made for any costs incurred beyond the specified time of completion.

Payment will be made under:

Pay Item		Pay Unit
900.650	Special Provision (Maintenance of Railroad Traffic) (N.A.B.I.)	Lump Unit

SECTION 900.670

SPECIAL PROVISION BRICK PAVERS

PART 1 - GENERAL

1.1 SECTION INCLUDES

A. Clay pavers set in bituminous setting bed

B. Joint sand.

C. Sand joint stabilizer

D. Edge restraints

1.2 RELATED SECTIONS

A. Concrete Section 541

1.3 REFERENCES

A. American Society of Testing and Materials (ASTM) (latest edition):
   1. C 33 Specification for Concrete Aggregates.
   2. C 136 Method for Sieve Analysis for Fine and Coarse Aggregate.
   3. C 140 Sampling and Testing Concrete Masonry Units.
   4. C 144 Standard Specifications for Aggregate for Masonry Mortar.
   5. C 936 Specifications for Solid Interlocking Concrete Paving Units.
   6. C 979 Specification for Pigments for Integrally Colored Concrete.
   7. D 698 Test Methods for Moisture Density Relations of Soil and Soil Aggregate Mixtures Using a 5.5 lb (24.4 N) Rammer and 12 in. (305 mm) drop.
   8. D 1557 Test Methods for Moisture Density Relations of Soil and Soil Aggregate Mixtures Using a 10-lb (44.5 N) Rammer and 18 in. (457 mm) drop.
   9. D 2940 Graded Aggregate Material for Bases or Subbases for Highways or Airports.

1.4 QUALITY ASSURANCE

A. Installation shall be by a contractor and crew with at least one year of experience in placing interlocking pavers on projects of similar nature or dollar cost. Contractor should be prepared to provide references from past project work they have completed verify their relevant experience.

1.5 SUBMITTALS

A. Shop or product drawings and product data shall be submitted for the following:

1. Clay Pavers

2. Bituminous setting materials

3. Joint Sand

4. Sand Joint Stabilizer

B. CERTIFICATIONS: Submit certifications that all brick pavers will meet or exceed designated specifications.

C. Full size samples of paving units shall be submitted to indicate color, finish and shapes.

D. Sieve analyses for grading of joint sand shall be submitted.

E. The layout, pattern, and relationship of paving joints to fixtures and project formed details shall be indicated.

1.6 MOCK-UPS

A. **Mockups: Before installing unit pavers, build mockups for each form and pattern of unit pavers required to verify selections made under sample Submittals and to demonstrate aesthetic effects and qualities of materials and execution. Build mockups to comply with the following requirements, using materials indicated for the completed Work, including same base construction, special features for expansion joints, and contiguous work as indicated:**

1. Build mockups in the location and of the size indicated or, if not indicated, as directed by Resident Engineer.
3. Notify Resident Engineer seven days in advance of dates and times when mockups will be constructed.
4. Demonstrate the proposed range of aesthetic effects and workmanship.
5. Obtain Resident Engineer's approval of mockups before starting unit paver installation.
6. Maintain mockups during construction in an undisturbed condition as a standard for judging the completed Work.

B. This area will be used to determine the amount that the pavers settle into bedding sand after compaction, joint sizes, lines, laying pattern, color, and texture of the project.

C. <u>This area shall be maintained as the standard from which the work will be judged</u>.

1.7 DELIVERY, STORAGE, AND HANDLING

A. Pavers shall be delivered to the site in steel banded, plastic banded, or plastic wrapped cubes capable of transfer by fork lift or clamp lift. The pavers shall be unloaded at the job site in such a manner that no damage occurs to the product.

B. Joint sand shall be covered with a secure waterproof covering to prevent exposure to rainfall or removal by wind.

1.8 ENVIRONMENTAL CONDITIONS

A. Cold-Weather Protection: Do not use frozen materials or materials mixed or coated with ice or frost. Do not build on frozen subgrade or setting beds. Remove and replace unit paver work damaged by frost or freezing.

B. Weather Limitations for Bituminous Setting Bed: Comply with the following requirements:

1. Apply asphalt adhesive when ambient temperature is above 50 deg F (10 deg C) and when temperature has not been below 35 deg F (2 deg C) for 12 hours immediately before application. Do not apply when base is wet or contains excess moisture.
2. Install bituminous setting bed only when atmospheric temperature is above 40 deg F (4 deg C) and when base is dry.

PART 2 - MATERIALS

2.1 CLAY PAVERS

A. Available Manufacturers: Subject to compliance with requirements, manufacturers offering products that may be incorporated into the Work include, but are not limited to, the following:

a) <u>Brick Pavers:</u>

- Style: Straight Edge - Heavy Duty
- Color: Standard Colors **(Final color of brick pavers to be selected by Resident Engineer once the final brick vendor is selected.)**
- Size: 4”x8”x2-3/4”
- Rated for heavy vehicular use.
- Manufacturers:
    1. Pine Hall
    2. Whitacre Greer
    3. Endicott
    4. Redland
    5. Or Approved Equal

2.2 BITUMINOUS SETTING BED MATERIALS

A. Primer for Base: ASTM D 2028, cutback asphalt, grade as recommended by unit paver manufacturer.

B. Fine Aggregate for Setting Bed: ASTM D 1073, No. 2 or No. 3.

C. Asphalt Cement: ASTM D 3381, Viscosity Grade AC-10 or AC-20.

D. Neoprene-Modified Asphalt Adhesive: Paving manufacturer's standard adhesive consisting of oxidized asphalt combined with 2 percent neoprene and 10 percent long-fibered mineral fibers containing no asbestos.

2.3 JOINT SAND

A. The joint sand shall be clean, non-plastic, and free from deleterious or foreign matter. It can be natural or manufactured from crushed rock. Do not use limestone screenings or stone dust that do not conform to the grading requirements in Table 4.

B. Apply a sand joint stabilizer to the paver joints.

- Manufacturers:
  1. Prosoco
  2. SandLock
  3. Gator Sand
  4. Or Approved Equal

1. The joint sand shall conform to the grading requirements of ASTM C 144 as shown in Table 4 below:

TABLE 4
JOINT SAND
GRADING REQUIREMENTS

ASTM C 144		
	Natural Sand	Manufactured Sand
Sieve Size	Percent Passing	Percent Passing
No. 4 (4.75 mm)	100	100
No. 8 (2.36 mm)	95 – 100	95 to 100
No. 16 (1.18 mm)	70 – 100	70 to 100
No. 30 (600 µm)	40 - 75	40 to 75
No. 50 (300 µm)	10 - 35	20 to 40
No. 100 (150 µm)	2 - 15	10 to 25
No. 200 (75 µm)	0	0 to 10

2.4 EDGE RESTRAINTS

A. The provision of suitable edge restraints is critical to the satisfactory performance of interlocking pavers. The pavers must abut tightly against the restraints to prevent rotation under load and any consequent spreading of joints. The restraints must be sufficiently stable that, in addition to providing suitable edge support for the paver units, they are able to withstand the impact of temperature changes, vehicular traffic and/or snow removal equipment.

B. Curbs, gutters or curbed gutter, constructed to the dimensions of municipal standards (noting that these standards generally refer to cast-in-place concrete sections), are considered to be acceptable edge restraints for heavy duty installations. Where extremely heavy industrial equipment is involved such as container handling equipment, the flexural strength of the edge restraint should be carefully reviewed, particularly if a section that is flush with the surface is used and may be subjected to high point loading.

C. Edge restraints shall be used along all unrestrained paver edges, examples include lawn and landscaped areas.

D. Paver edge restraints should be commercial grade, rated for heavy duty use and be made of a black polymer plastic. Paver edge restraint should be able to be applied in reverse mode, per the details.

E. Refer to layout plans and details for installation requirements.

2.5 SAND JOINT STABILIZER

A. Apply the sand joint stabilizer per the manufacturer's requirements and recommendations. The sand joint stabilizer should be applied to all brick surfaces.

B. Protect neighboring surfaces to avoid spillage or transfer of sand joint stabilizer, which might cause staining or discoloration.

2.6 BITUMINOUS SETTING-BED MIX

A. Mix bituminous setting-bed materials at an asphalt plant in approximate proportion, by weight, of 7 percent asphalt cement to 93 percent fine aggregate, unless otherwise indicated. Heat mixture to 300 deg F (149 deg C).

PART 3 - EXECUTIONS

3.1 EXAMINATION

C. Examine areas indicated to receive paving, with Installer present, for compliance with requirements for installation tolerances and other conditions affecting performance. Proceed with installation only after unsatisfactory conditions have been corrected.

3.2 PREPARATION

A. Vacuum clean concrete substrates to remove dirt, dust, debris, and loose particles.

C. Remove substances, from concrete substrates, that could impair mortar bond, including curing and sealing compounds, form oil, and laitance.

E. Proof-roll prepared subgrade surface to check for unstable areas and areas requiring additional compaction. Proceed with unit paver installation only after deficient subgrades have been corrected and are ready to receive subbase for unit pavers.

3.3 PAVER INSTALLATION, GENERAL

A. Initiation of paver placement shall be deemed to represent acceptance of the pavers.

B. Pavers shall be free of foreign material before installation.

C. Pavers shall be inspected for color distribution and all chipped, damaged or discolored pavers shall be replaced.

D. The pavers shall be laid in the pattern(s) as shown on the drawings. String lines or chalk lines on bedding sand should be used to hold all pattern lines true.

E. Joints between the pavers on average shall be between 1/16 in. and 1/8 in. (2 mm to 4 mm) wide. In order to maintain the desired pattern, joint spacing must be consistent. This spacing must also be provided for the first row abutting the edge restraint.

F. Note: Installing pavers too tightly may lead to chipping at the edges.

G. Gaps at the edges of the paved area shall be filled with cut pavers.

H. Pavers to be placed along the edge shall be cut with a masonry saw only.

I. Note: The use of infill concrete or discontinuities in patterns will not be permitted except along the outer pavement boundaries, adjacent to drains and manholes.

J. Upon completion of cutting, the area must be swept clean of all debris to facilitate inspection and to ensure pavers are not damaged during compaction. (Debris or sand particles left on pavers which are being compacted can cause point loading which may chip, scrape or break the paver.)

K. Dry joint sand shall be swept into the joints until the joints are full. This will require at least two or three passes with the compactor. Do not compact within 3 ft. (1 m) of the unrestrained edges of the paving units.

L. Excess joint sand shall be swept off when the job is complete.

3.4 BITUMINOUS SETTING BED APPLICATIONS

A. Apply primer to concrete slab or binder course immediately before placing setting bed.

B. Prepare for setting-bed placement by locating 1-inch- deep control bars set parallel to one another, to serve as guides for striking board. Adjust bars to subgrades required for accurate setting of paving units to finished grades indicated.

C. Place bituminous setting bed where indicated, in panels, by spreading bituminous material between control bars. Strike setting bed smooth, firm, even, and not less than 1 inch thick. Add fresh bituminous material to low, porous spots after each pass of striking board. After each panel is completed, advance first control bar to next position in readiness for striking adjacent panels. Carefully fill depressions that remain after removing depth-control bars.

1. Roll setting bed with power roller to a nominal depth of 1 inch while still hot. Adjust thickness as necessary to allow accurate setting of unit pavers to finished grades indicated.

2. Apply neoprene-modified asphalt adhesive to cold setting bed by squeegeeing or troweling. If troweled on, use trowel with serrations not exceeding 1/16 inch (1.6 mm). Proceed with setting of paving units only after adhesive is dry to the touch.

D. Place pavers carefully by hand in straight courses, maintaining accurate alignment and uniform top surface. Protect newly laid pavers with plywood panels on which workers can stand. Advance protective panels as work progresses, but maintain protection in areas subject to continued movement of materials and equipment to avoid creating depressions or disrupting alignment of pavers. If additional leveling of paving is required, and before treating joints, roll paving with power roller after sufficient heat has built up in the surface from several days of hot weather.

E. Joint Treatment: Place unit pavers with hand-tight joints. Fill joints with sand by sweeping over paved surface until joints are filled.

3.5 FIELD QUALITY CONTROL

A. Final elevations shall be checked for conformance to the drawings after removal of excess joint sand.

B. All surface and pavement structures shall be true to the lines and levels, grades, thickness and cross sections shown on the drawings. All pavements shall be finished to lines and levels to ensure positive drainage at all drainage outlets and channels. In no case shall the cross-fall of any portion of pavement be less than 2 percent. The final surface elevations shall not deviate more than 3/8 in. (10 mm) under a 10 ft. (3 m) long straight edge.

C. The surface elevation of pavers shall be 1/8 to 1/4 in. (3 to 6 mm) above adjacent drainage inlets, concrete collars or channels.

3.6 REPAIR, POINTING, CLEANING, AND PROTECTION

A. Remove and replace unit pavers that are loose, chipped, broken, stained, or otherwise damaged or that do not match adjoining units as intended. Provide new units to match adjoining units and install in same manner as original units, with same joint treatment and with no evidence of replacement.

B. Cleaning: Remove excess neoprene tackcoat from exposed paver surfaces; wash and scrub clean.

PART 4 - PAYMENT

4.01 METHOD OF MEASUREMENT

A. The quantity of Special Provision Brick Pavers will be paid on a square foot (SF) basis to install the brick pavers in the designated locations within the limits shown on the plans.

4.02 BASIS OF PAYMENT

A. The accepted quantity of Special Provision Brick Pavers will be paid for at the Contract SF price. The brick pavers, neoprene tack coat, sand for joints, bituminous setting bed, edge restraints, and installation shall be paid for incidental to this pay item.

Payment will be made under:

Pay Item	Pay Unit
900.670 Special Provision Brick Pavers	SF

END OF SECTION

SECTION 900.670

SPECIAL PROVISION STONE PAVERS

PART 1 - GENERAL

1.1 SECTION INCLUDES

A. Stone pavers set in bituminous setting bed

B. Joint sand.

C. Sand joint stabilizer

D. Edge restraints

1.2 RELATED SECTIONS

A. Concrete Section 541

1.3 REFERENCES

A. American Society of Testing and Materials (ASTM) (latest edition):
   1. C 33 Specification for Concrete Aggregates.
   2. C 136 Method for Sieve Analysis for Fine and Coarse Aggregate.
   3. C 140 Sampling and Testing Concrete Masonry Units.
   4. C 144 Standard Specifications for Aggregate for Masonry Mortar.
   5. C 936 Specifications for Solid Interlocking Concrete Paving Units.
   6. C 979 Specification for Pigments for Integrally Colored Concrete.
   7. D 698 Test Methods for Moisture Density Relations of Soil and Soil Aggregate Mixtures Using a 5.5 lb (24.4 N) Rammer and 12 in. (305 mm) drop.
   8. D 1557 Test Methods for Moisture Density Relations of Soil and Soil Aggregate Mixtures Using a 10-lb (44.5 N) Rammer and 18 in. (457 mm) drop.
   9. D 2940 Graded Aggregate Material for Bases or Subbases for Highways or Airports.

1.4 QUALITY ASSURANCE

A. Installation shall be by a contractor and crew with at least one year of experience in placing interlocking pavers on projects of similar nature or dollar cost. Contractor should be prepared to provide references from past project work they have completed verify their relevant experience.

1.5 SUBMITTALS

A. Shop or product drawings and product data shall be submitted for the following:

1. Stone Pavers
2. Bituminous setting materials
3. Joint Sand
4. Sand Joint Stabilizer

B. CERTIFICATIONS: Submit certifications that all stone pavers will meet or exceed designated specifications.

C. Full size samples of paving units shall be submitted to indicate color, finish and shapes.

D. Sieve analyses for grading of joint sand shall be submitted.

E. The layout, pattern, and relationship of paving joints to fixtures and project formed details shall be indicated.

1.6 MOCK-UPS

A. **Mockups: Before installing unit pavers, build mockups for each form and pattern of unit pavers required to verify selections made under sample Submittals and to demonstrate aesthetic effects and qualities of materials and execution. Build mockups to comply with the following requirements, using materials indicated for the completed Work, including same base construction, special features for expansion joints, and contiguous work as indicated:**

1. Build mockups in the location and of the size indicated or, if not indicated, as directed by Resident Engineer.
3. Notify Resident Engineer seven days in advance of dates and times when mockups will be constructed.
4. Demonstrate the proposed range of aesthetic effects and workmanship.
5. Obtain Resident Engineer's approval of mockups before starting unit paver installation.
6. Maintain mockups during construction in an undisturbed condition as a standard for judging the completed Work.

B. This area will be used to determine the amount that the pavers settle into bedding sand after compaction, joint sizes, lines, laying pattern, color, and texture of the project.

C. <u>This area shall be maintained as the standard from which the work will be judged</u>.

1.7 DELIVERY, STORAGE, AND HANDLING

A. Pavers shall be delivered to the site in steel banded, plastic banded, or plastic wrapped cubes capable of transfer by fork lift or clamp lift. The pavers shall be unloaded at the job site in such a manner that no damage occurs to the product.

B. Joint sand shall be covered with a secure waterproof covering to prevent exposure to rainfall or removal by wind.

1.8 ENVIRONMENTAL CONDITIONS

A. Cold-Weather Protection: Do not use frozen materials or materials mixed or coated with ice or frost. Do not build on frozen subgrade or setting beds. Remove and replace unit paver work damaged by frost or freezing.

B. Weather Limitations for Bituminous Setting Bed: Comply with the following requirements:

1. Apply asphalt adhesive when ambient temperature is above 50 deg F (10 deg C) and when temperature has not been below 35 deg F (2 deg C) for 12 hours immediately before application. Do not apply when base is wet or contains excess moisture.
2. Install bituminous setting bed only when atmospheric temperature is above 40 deg F (4 deg C) and when base is dry.

PART 2 - MATERIALS

2.1 STONE PAVERS

A. Granite Paver (Field of pavers at main entry to Hotel)
Size: 3"x12”x24”
Finish: Thermal finish on top. Bottom and edges can be a sawn finish.
Type:
1. “P1” Medium Dark granite, charcoal in color. Contractor to provide color options for final selection.
2. “P2” Dark granite, black in color. Contractor to provide color options for final selection.

2.2 BITUMINOUS SETTING BED MATERIALS

A. Primer for Base: ASTM D 2028, cutback asphalt, grade as recommended by unit paver manufacturer.

B. Fine Aggregate for Setting Bed: ASTM D 1073, No. 2 or No. 3.

C. Asphalt Cement: ASTM D 3381, Viscosity Grade AC-10 or AC-20.

D. Neoprene-Modified Asphalt Adhesive: Paving manufacturer's standard adhesive consisting of oxidized asphalt combined with 2 percent neoprene and 10 percent long-fibered mineral fibers containing no asbestos.

2.3 JOINT SAND

A. The joint sand shall be clean, non-plastic, and free from deleterious or foreign matter. It can be natural or manufactured from crushed rock. Do not use limestone screenings or stone dust that do not conform to the grading requirements in Table 4.

B. Apply a sand joint stabilizer to the paver joints.

- Manufacturers:
  1. Prosoco
  2. SandLock
  3. Gator Sand
  4. Or Approved Equal

1. The joint sand shall conform to the grading requirements of ASTM C 144 as shown in Table 4 below:

TABLE 4
JOINT SAND
GRADING REQUIREMENTS

ASTM C 144		
	Natural Sand	Manufactured Sand
Sieve Size	Percent Passing	Percent Passing
No. 4 (4.75 mm)	100	100
No. 8 (2.36 mm)	95 – 100	95 to 100
No. 16 (1.18 mm)	70 – 100	70 to 100
No. 30 (600 µm)	40 - 75	40 to 75
No. 50 (300 µm)	10 - 35	20 to 40
No. 100 (150 µm)	2 - 15	10 to 25
No. 200 (75 µm)	0	0 to 10

2.4 EDGE RESTRAINTS

A. The provision of suitable edge restraints is critical to the satisfactory performance of interlocking pavers. The pavers must abut tightly against the restraints to prevent rotation under load and any consequent spreading of joints. The restraints must be sufficiently stable that, in addi-

tion to providing suitable edge support for the paver units, they are able to withstand the impact of temperature changes, vehicular traffic and/or snow removal equipment.

B. Curbs, gutters or curbed gutter, constructed to the dimensions of municipal standards (noting that these standards generally refer to cast-in-place concrete sections), are considered to be acceptable edge restraints for heavy duty installations. Where extremely heavy industrial equipment is involved such as container handling equipment, the flexural strength of the edge restraint should be carefully reviewed, particularly if a section that is flush with the surface is used and may be subjected to high point loading.

C. Edge restraints shall be used along all unrestrained paver edges.

D. Refer to layout plans and details for installation requirements.

2.5 SAND JOINT STABILIZER

A. Apply the sand joint stabilizer per the manufacturer's requirements and recommendations. The sand joint stabilizer should be applied to all stone surfaces.

B. Protect neighboring surfaces to avoid spillage or transfer of sand joint stabilizer, which might cause staining or discoloration.

2.6 BITUMINOUS SETTING-BED MIX

A. Mix bituminous setting-bed materials at an asphalt plant in approximate proportion, by weight, of 7 percent asphalt cement to 93 percent fine aggregate, unless otherwise indicated. Heat mixture to 300 deg F (149 deg C).

PART 3 - EXECUTIONS

3.1 EXAMINATION

C. Examine areas indicated to receive paving, with Installer present, for compliance with requirements for installation tolerances and other conditions affecting performance. Proceed with installation only after unsatisfactory conditions have been corrected.

3.2 PREPARATION

A. Vacuum clean concrete substrates to remove dirt, dust, debris, and loose particles.

C. Remove substances, from concrete substrates, that could impair mortar bond, including curing and sealing compounds, form oil, and laitance.

E. Proof-roll prepared subgrade surface to check for unstable areas and areas requiring additional compaction. Proceed with unit paver installation only after deficient subgrades have been corrected and are ready to receive subbase for unit pavers.

3.3 PAVER INSTALLATION, GENERAL

A. Initiation of paver placement shall be deemed to represent acceptance of the pavers.

B. Pavers shall be free of foreign material before installation.

C. Pavers shall be inspected for color distribution and all chipped, damaged or discolored pavers shall be replaced.

D. The pavers shall be laid in the pattern(s) as shown on the drawings. String lines or chalk lines on bedding sand should be used to hold all pattern lines true.

E. Joints between the pavers on average shall be between 1/16 in. and 1/8 in. (2 mm to 4 mm) wide. In order to maintain the desired pattern, joint spacing must be consistent. This spacing must also be provided for the first row abutting the edge restraint.

F. Note: Installing pavers too tightly may lead to chipping at the edges.

G. Gaps at the edges of the paved area shall be filled with cut pavers.

H. Pavers to be placed along the edge shall be cut with a masonry saw only.

I. Note: The use of infill concrete or discontinuities in patterns will not be permitted except along the outer pavement boundaries, adjacent to drains and manholes.

J. Upon completion of cutting, the area must be swept clean of all debris to facilitate inspection and to ensure pavers are not damaged during compaction. (Debris or sand particles left on pavers which are being compacted can cause point loading which may chip, scrape or break the paver.)

K. Dry joint sand shall be swept into the joints until the joints are full. This will require at least two or three passes with the compactor. Do not compact within 3 ft. (1 m) of the unrestrained edges of the paving units.

L. Excess joint sand shall be swept off when the job is complete.

3.4 BITUMINOUS SETTING BED APPLICATIONS

A. Apply primer to concrete slab or binder course immediately before placing setting bed.

B. Prepare for setting-bed placement by locating 1-inch- deep control bars set parallel to one another, to serve as guides for striking board. Adjust bars to subgrades required for accurate setting of paving units to finished grades indicated.

C. Place bituminous setting bed where indicated, in panels, by spreading bituminous material between control bars. Strike setting bed smooth, firm, even, and not less than 1 inch thick. Add fresh bituminous material to low, porous spots after each pass of striking board. After each panel is completed, advance first control bar to next position in readiness for striking adjacent panels. Carefully fill depressions that remain after removing depth-control bars.

1. Roll setting bed with power roller to a nominal depth of 1 inch while still hot. Adjust thickness as necessary to allow accurate setting of unit pavers to finished grades indicated.

2. Apply neoprene-modified asphalt adhesive to cold setting bed by squeegeeing or troweling. If troweled on, use trowel with serrations not exceeding 1/16 inch (1.6 mm). Proceed with setting of paving units only after adhesive is dry to the touch.

D. Place pavers carefully by hand in straight courses, maintaining accurate alignment and uniform top surface. Protect newly laid pavers with plywood panels on which workers can stand. Advance protective panels as work progresses, but maintain protection in areas subject to continued movement of materials and equipment to avoid creating depressions or disrupting alignment of pavers. If additional leveling of paving is required, and before treating joints, roll paving with power roller after sufficient heat has built up in the surface from several days of hot weather.

E. Joint Treatment: Place unit pavers with hand-tight joints. Fill joints with sand by sweeping over paved surface until joints are filled.

3.5 FIELD QUALITY CONTROL

A. Final elevations shall be checked for conformance to the drawings after removal of excess joint sand.

B. All surface and pavement structures shall be true to the lines and levels, grades, thickness and cross sections shown on the drawings. All pavements shall be finished to lines and levels to ensure positive drainage at all drainage outlets and channels. In no case shall the cross-fall of any portion of pavement be less than 2 percent. The final surface elevations shall not deviate more than 3/8 in. (10 mm) under a 10 ft. (3 m) long straight edge.

C. The surface elevation of pavers shall be 1/8 to 1/4 in. (3 to 6 mm) above adjacent drainage inlets, concrete collars or channels.

3.6 REPAIR, POINTING, CLEANING, AND PROTECTION

A. Remove and replace unit pavers that are loose, chipped, broken, stained, or otherwise damaged or that do not match adjoining units as intended. Provide new units to match adjoining units and install in same manner as original units, with same joint treatment and with no evidence of replacement.

B. Cleaning: Remove excess neoprene tackcoat from exposed paver surfaces; wash and scrub clean.

PART 4 - PAYMENT

4.01 METHOD OF MEASUREMENT

A. The quantity of Special Provision Stone Pavers will be paid on a square foot (SF) basis to install the stone pavers in the designated locations within the limits shown on the plans.

4.02 BASIS OF PAYMENT

A. The accepted quantity of Special Provision Stone Pavers will be paid for at the Contract SF price. The stone pavers, neoprene tack coat, sand for joints, bituminous setting bed, edge restraints, and installation shall be paid for incidental to this pay item.

Payment will be made under:

Pay Item	Pay Unit
900.670 Special Provision Stone Pavers	SF

END OF SECTION

HAND-PLACED BITUMINOUS CONCRETE MATERIAL, DRIVES

DESCRIPTION. This work shall consist of the placement of one or more courses of bituminous concrete material by hand (non-mechanical) methods on a prepared foundation in conformance with the Plans or as directed by the Engineer.

The work under this Section shall be performed in accordance with these provisions, the Plans and Section 406 or Section 490 of the Standard Specifications, as appropriate.

GENERAL. This work will include only that bituminous concrete material placed by hand methods as required at public and/or private drives measured from the outside edge of shoulder to outside limit of drive, within the project limits as identified on the Plans or as directed by the Engineer. Bituminous concrete material placed by mechanical methods at these locations is excluded.

All other bituminous materials placed within the project limits, whether by hand or mechanical methods, shall be paid under the appropriate Contract pay item for bituminous mix or as otherwise specified in the Contract Documents.

MATERIALS. Materials shall meet the requirements of the following Subsections:

Subbase, RAP.....301.02
Aggregate Shoulders, RAP.....402.02
Performance-Graded Asphalt Binder.....702.02
Emulsified Asphalt.....702.04
Crushed Gravel for Subbase.....704.05
Aggregate for Surface Course and Shoulders.....704.12

Bituminous concrete material of the type specified in the Contract or as specified by the Engineer shall meet the requirements of Section 406 or Section 490, as applicable. For the purpose of this Section, bituminous concrete material to be used shall be of the type specified in the Contract or, by default, of a matching material to that adjacent material placed by mechanical methods.

CONSTRUCTION REQUIREMENTS. The existing surface and/or bed (subbase) upon which the bituminous concrete material is to be placed shall be compacted to the line, grade, and shape shown on the Plans or as directed by the Engineer. All vegetation and soft, yielding, or unsuitable material shall be excavated and replaced with properly compacted material meeting the requirements of Section 301 for Subbase of Crushed Gravel, Fine Graded. Crushed RAP generated from the project may be substituted for Subbase of Crushed Gravel, Fine Graded.

The existing edge of pavement shall be saw cut to provide a vertical edge for placing the hand-placed bituminous concrete material.

Emulsified asphalt shall be applied uniformly and completely to all vertical and horizontal surfaces to be paved. All surfaces shall be free of moisture, dust, and debris prior to applying emulsified asphalt.

If cross slope allows, as determined by the Engineer, existing paved

drives shall be cold planed the entire drive width to the depth of the wearing course, not to exceed 50 mm (2 inches). Unless the drive is to be paved that day, all cold planed vertical edges shall have temporary fillets placed the same day cold planing takes place.

All existing paved drives shall have all temporary fillets removed; any existing joints, cracks, and holes cleaned; all vertical and horizontal surfaces to be paved coated with emulsified asphalt; all holes filled with bituminous concrete material compacted to the level of the existing surface; and be thoroughly cleaned and dried prior to any hand-placed bituminous concrete material being placed.

Hand-Placed bituminous concrete material shall be rolled with a 1 metric ton (1 ton) mechanical roller with steel drums, or approved equal, until compacted to the satisfaction of the Engineer.

METHOD OF MEASUREMENT. The quantity of Special Provision (Hand-Placed Bituminous Concrete Material, Drives) to be measured for payment will be the number of square meters (square yards) complete in place in the accepted work.

Hand-placed bituminous concrete material placed less that 12.5 mm (½ inch) thick will not be measured for payment.

When any portion or all of Special Provision (Hand-Placed Bituminous Concrete Material, Drives) is removed from the project under any provisions of the Contract or as directed by the Engineer, no payment will be made for the removal, disposal, or replacement of said material.

BASIS OF PAYMENT. The measured quantity of Special Provision (Hand-Placed Bituminous Concrete Material, Drives) will be paid for at the Contract unit price per square meter (square yard). Payment shall be full compensation for furnishing, mixing, hauling, placing, compacting, and finishing the material specified and for furnishing all labor, tools, equipment, and incidentals necessary to complete the work.

Emulsified asphalt used as specified and backfill material meeting the requirements specified in the Plans will be considered incidental to Special Provision (Hand-Placed Bituminous Concrete Material, Drives).

When not specified for payment under separate Contract item(s), the costs of placing subbase material, cleaning existing paved surfaces, including power equipment, and for filling joints, cracks, and holes will not be paid for directly, but will be considered incidental to Special Provision (Hand-Placed Bituminous Concrete Material, Drives).

Payment will be made under:

Pay Item	Pay Unit
900.675 Special Provision (Hand-Placed Bituminous Concrete Material, Drives)	Square Yard

PORTLAND CEMENT REINFORCED CONCRETE SIDEWALK

1. DESCRIPTION. This work shall consist of the construction of Portland cement reinforced concrete sidewalk and curb ramps.

   The work under this Section shall be performed in accordance with these provisions, the Plans, and Section 618 of the Standard Specifications.

2. MATERIALS. Sidewalk reinforcement shall be 150 mm x 150 mm (6 inch x 6 inch) 10 gage welded wire steel grid meeting the requirements of Subsection 713.05.

   Dowels shall be 600 mm (2 foot) long No. 16 (No. 5) reinforcing bars meeting the requirements of Subsection 713.01.

   Forms shall meet the requirements of Section 618.03(b). Forming shall include additional provisions for concrete sidewalk set underneath the brick pavers and sand cushion as detailed in the plans.

3. CONSTRUCTION REQUIREMENTS. Welded wire steel grid and dowels shall be placed at mid-depth of the concrete sidewalk. Dowels shall be placed across all sidewalk construction joints, 600 mm (2 feet) on center. Prior to placing concrete that is adjacent to existing buildings, walls, stairs or landscaping the Contractor shall place 6 mil polyethylene protective sheeting over adjacent surfaces to protect them from concrete splatter, spraying and any surface treatment operations that may stain adjacent surfaces. Sheeting shall be temporarily attached to hard surfaces by taping and to landscaped areas by staking. Care shall be taken not to harm adjacent surfaces during removal of tape. In addition, sawcutting equipment that is used for sawing sidewalk joints shall employ vacuum attachments to control dust.

4. METHOD OF MEASUREMENT. The quantity of Special Provision (Portland Cement Concrete Reinforced Concrete Sidewalk) to be measured for payment will be the number of square meters (square yards) of the specified depth of sidewalk installed in the complete and accepted work.

5. BASIS OF PAYMENT. The accepted quantity of Special Provision (Portland Cement Reinforced Concrete Sidewalk) will be paid for at the Contract unit price per square meter (square yard) for the specified depth. Payment will be full compensation for furnishing, transporting, handling, and placing the materials specified, including reinforcing, dowels, and expansion joint material, and for furnishing all labor, tools, equipment, and incidentals necessary to complete the work.

   Bed course material will be paid for under the appropriate Contract item in Section 301.

   Excavation, unless otherwise specified, will be paid for under the appropriate Contract item in Section 203.

   Payment will be made under:

Pay Item	Description	Pay Unit

900.675	**Special Provision (Portland Cement Reinforced Concrete Sidewalk, 6 Inch)**	**Square Yard**
900.675	**Special Provision (Portland Cement Reinforced Concrete Sidewalk, 8 Inch)**	**Square Yard**

HAND-PLACED BITUMINOUS CONCRETE MATERIAL, DRIVES

101. DESCRIPTION. This work shall consist of the placement of one or more courses of bituminous concrete material by hand (non-mechanical) methods on a prepared foundation in conformance with the Plans or as directed by the Engineer.

The work under this Section shall be performed in accordance with these provisions, the Plans and Section 406 or Section 490 of the Standard Specifications, as appropriate.

102. GENERAL. This work will include only that bituminous concrete material placed by hand methods as required at public and/or private drives and permitted drives (such as field drives for agriculture) measured from the outside edge of shoulder to outside limit of drive, within the project limits as identified on the Plans or as directed by the Engineer. Bituminous concrete material placed by mechanical methods at these locations is excluded.

All other bituminous materials placed within the project limits, whether by hand or mechanical methods, shall be paid under the appropriate Contract pay item for bituminous mix or as otherwise specified in the Contract Documents.

103. MATERIALS. Materials shall meet the requirements of the following Subsections:

Subbase, RAP	301.02
Aggregate Shoulders, RAP	402.02
Performance-Graded Asphalt Binder	702.02
Emulsified Asphalt	702.04
Crushed Gravel for Subbase	704.05
Aggregate for Surface Course and Shoulders	704.12

Bituminous concrete material of the type specified in the Contract or as specified by the Engineer shall meet the requirements of Section 406 or Section 490, as applicable. For the purpose of this Section, bituminous concrete material to be used shall be of the type specified in the Contract or, by default, of a matching material to that adjacent material placed by mechanical methods.

104. CONSTRUCTION REQUIREMENTS. The existing surface and/or bed (subbase) upon which the bituminous concrete material is to be placed shall be compacted to the line, grade, and shape shown on the Plans or as directed by the Engineer. All vegetation and soft, yielding, or unsuitable material shall be excavated and replaced with properly compacted material meeting the requirements of Section 301 for Subbase of Crushed Gravel, Fine Graded. Crushed RAP generated from the project may be substituted for Subbase of Crushed Gravel, Fine Graded.

The existing edge of pavement shall be saw cut to provide a vertical edge for placing the hand-placed bituminous concrete material.

Emulsified asphalt shall be applied uniformly and completely to all vertical and horizontal surfaces to be paved. All surfaces shall be free of moisture, dust, and debris prior to applying emulsified asphalt.

If cross slope allows, as determined by the Engineer, existing paved drives shall be cold planed the entire drive width to the depth of the wearing course, not to exceed 50 mm (2 inches). Unless the drive is to be paved that day, all cold planed vertical edges shall have temporary fillets placed the same day cold planning takes place.

All existing paved drives shall have all temporary fillets removed; any existing joints, cracks, and holes cleaned; all vertical and horizontal surfaces to be paved coated with emulsified asphalt; all holes filled with bituminous concrete material compacted to the level of the existing surface; and be thoroughly cleaned and dried prior to any hand-placed bituminous concrete material being placed.

Hand-Placed bituminous concrete material shall be rolled with a 1 metric ton (1 ton) mechanical roller with steel drums, or approved equal, until compacted to the satisfaction of the Engineer.

105. METHOD OF MEASUREMENT. The quantity of Special Provision (Hand-Placed Bituminous Concrete Material, Drives) to be measured for payment will be the number of square meters (square yards) complete in place in the accepted work.

Hand-placed bituminous concrete material placed less than 12.5 mm (½ inch) thick will not be measured for payment.

When any portion or all of Special Provision (Hand-Placed Bituminous Concrete Material, Drives) is removed from the project under any provisions of the Contract or as directed by the Engineer, no payment will be made for the removal, disposal, or replacement of said material.

106. BASIS OF PAYMENT. The measured quantity of Special Provision (Hand-Placed Bituminous Concrete Material, Drives) will be paid for at the Contract unit price per square meter (square yard). Payment shall be full compensation for furnishing, mixing, hauling, placing, compacting, and finishing the material specified and for furnishing all labor, tools, equipment, and incidentals necessary to complete the work.

Emulsified asphalt used as specified and backfill material meeting the requirements specified in the Plans will be considered incidental to Special Provision (Hand-Placed Bituminous Concrete Material, Drives).

When not specified for payment under separate Contract item(s), the costs of placing subbase material, cleaning existing paved surfaces, including power equipment, and for filling joints, cracks, and holes will not be paid for directly, but will be considered incidental to Special Provision (Hand-Placed Bituminous Concrete Material, Drives).

Payment will be made under:

Pay Item	Pay Unit
900.675 Special Provision (Hand-Placed Bituminous Concrete Material, Drives)	Square Yard

SECTION 635 - MOBILIZATION/DEMOBILIZATION

DESCRIPTION. The work under this Section shall be performed in accordance with these provisions and Section 635 of the Standard Specifications.

METHOD OF MEASUREMENT. The quantity of Mobilization/Demobilization to be measured for payment will be on a lump sum basis.

BASIS OF PAYMENT. The accepted quantity of Mobilization / Demobilization will be paid for at the Contract lump sum price. Payment will be full compensation for performing the work specified and for furnishing all labor, tools, materials, equipment, and incidentals necessary to complete the work.

For the purposes of computing payment under the Contract item Mobilization/Demobilization, the adjusted Contract price will be a summation of all items bid, excluding the amount bid specifically for the Mobilization/ Demobilization item.

The Basis of Payment will be modified to be as follows:

(a) The first payment of **30** percent of the lump sum price for Mobilization/Demobilization or 5 percent of the adjusted Contract price, whichever is less, will be made with the first biweekly estimate as determined by the work on other contract items.

(b) The second payment of **70** percent of the lump sum price for Mobilization/Demobilization or 5 percent of the adjusted Contract price, whichever is less, will be made on the first estimate following the completion of 10 percent of the Contract, excluding Mobilization/Demobilization.

(c) Payment of any remaining amount bid for Mobilization/Demobilization will be made after the acceptance date.

No separate payment will be made for demobilization and remobilization due to winter shutdown at the conclusion of work completed in 2016.

Payment will be made under:

Pay Item		**Pay Unit**
635.11	**Mobilization/Demobilization**	**Lump Sum**

SPECIAL PROVISION

PAINTING TRAFFIC SIGNAL STRUCTURES

DESCRIPTION: This work shall consist of galvanizing and painting traffic signal equipment using a galvanizing-paint duplex coating system at the locations indicated in the Plans and as directed by the Engineer. All signal structures called out to be painted flat black shall be galvanized and powder coated with at least two coats of exterior grade powder coat paint suitable for a low speed traffic environment subject to high levels of salt.

The work under this Section shall be performed in accordance with these provisions, the Plans, and Sections 506, 678 and 752 of the Standard Specifications.

MATERIALS: Galvanizing-Paint Duplex Coating System for City of St Albans Signal Equipment

All steel components, except for stainless steel and anchor plates, shall be galvanized, pre-treated, and shop painted except as noted. Hardware need not be painted after galvanizing except for the portions exposed to view after installation, such as bolt heads, ends, nuts and washers, which may be field painted. Touch-up and repairs shall be made using paint from the same batch run as used for the shop-applied coats and supplied by the shop applicator.

Shop Drawings and Samples

The following provisions shall be made for hot-dip galvanizing and shop-applied paint for traffic signal hardware as shown on the plans or as directed. The requirements for the surface preparation shall conform to Section 506.14 – Structural Steel, Surface Preparation, except as required herein, or approved otherwise.

The fabricator shall send the drawings to the galvanizer for review to note considerations particular to the galvanizing process and to coordinate any proposed modifications to the fabricated materials, prior to submission of shop drawings to the Engineer for approval.

One each 3-inch by 6-inch (approximate size) sample of material to be used in the work shall be galvanized and painted as specified herein and submitted to the Engineer and City of St Albans for approval of surface texture and color prior to full production galvanizing and painting. The fabricator of the material shall provide the galvanizer with samples taken from the same material to be used in the work.

The fabricator shall notify the galvanizer if the chemical composition of the steel to be galvanized exceeds the following limits, in order to determine its suitability for processing: 0.26% carbon, 0.24% silicon, 0.05% phosphorous, and 1.35% manganese.

Coating System Process and Material

The galvanizing-paint duplex coating system shall consist of the following generic type at the minimum coating thickness shown:

Coating	Description	Thickness
Galvanized	Hop-dip Galvanizing	Per Section 506.15
Pre-Treatment	SP1 Solvent Cleaning	
	SP7 Brush-off Blast Cleaning	
	Phosphate Cleaning (required when painting is more than 12 hours after galvanizing)	
Intermediate (force-cured)	High Build Epoxy Polyamide	3 mils DFT
Finish (force-cured)	Aliphatic Polyurethane	3 mils DFT

Galvanizing

Surfaces to be galvanized shall be zinc coated in conformance with AASHTO M 111M/M 111or AASHTO M 232M/M 232 utilizing the dry kettle process in a bath ofmolten zinc containing nickel (0.05% to 0.09% by weight). Hardware may be mechanically galvanized in conformance with AASHTO N 298 (ASTM B 695) Class 50.

The galvanized steel product shall be pre-treated and painted by one of the following methods:

Method 1 (under 12 hours). The galvanized steel shall be pre-treated. The first coat of paint shall be applied within twelve hours of galvanizing and within eight hours of blast cleaning (or surface abrasion by approved mechanical means).

Method 2 (over 12 hours). When the galvanized steel is to be pained more than 12 hours after galvanizing, the steel shall be pre-treated followed by a treatment of zinc phosphate applied within eight hours of blast cleaning (or surface abrasion by approved mechanical means). The first coat of paint shall be applied within twelve hours of phosphating.

Pre-Treatment

Prior to painting, the galvanized surface shall receive pre-treatment consisting of SSPC-SP1, Solvent Cleaning, and SSPC-SP7, Brush-Off Blast Cleaning or abraded by approved mechanical means, to remove detrimental contaminants and to thoroughly roughen the entire surface and produce a uniform anchor profile of 1-2 mils. The required thickness of the zinc coating shall be maintained and checked prior to painting. The pre-treatment shall meet the paint manufacturer's requirements. An additional pre-treatment or tie coat may be considered if required by the paint manufacturer and approved by the Engineer.

Blast cleaning shall be performed prior to the formation of "white rust" on the galvanized surface. If any "white rust" is detected by visual means, the galvanizing shall be stripped off and the steel re-galvanized in conformance with these specifications. "White rust" shall be defined in the Inspection of Products Hot Dip Galvanized After Fabrication, Table IV, by the American Galvanizers Association.

Paint coating shall be shop applied to the galvanized product within 15 days of galvanizing. Painting shall be performed inside a controlled environment meeting applicable atmospheric requirements as recommended by the coating manufacturer. Prior to pre-treatment, rough areas of galvanizing shall be ground smooth to achieve a uniform galvanized surface to accept paint.

Phosphating, when required as described herein, shall conform to zinc phosphate coating (light) of galvanized steel, D.O.D. specification TT-C-49D, or approved equal, and shall be applied according to the manufacturer's recommendation.

When phosphating is required, the phosphate applicator shall document in writing that the phosphating procedure is acceptable to the galvanizer and coating manufacturer prior to performing the work.

Painting

Each coat of paint shall be separately colored to contrast with other coats and to insure complete coverage. The previous coat shall be hidden by a single application of each coat. The final color of the painted product shall be flat black Federal Standard 595 Color #27038.

Intermediate and finish coats shall be shop applied under atmospheric conditions meeting the following minimum requirements: air and steel temperature of 50° F above the dew point. The finish coat shall be spray applied.

The intermediate and finish paint coats shall each be force cured in a heated booth maintained at a minimum temperature of 150° F for 2-4 hours.

The finished shop-coated material shall be handled with care using nylon slings, padded cables, etc. as required to protect the finished coating. The paint applicator shall be responsible for the condition of the finished coating until the material arrives at the job site.

Field Touch-up and Repairs

Damaged galvanized surfaces shall be repaired by applying an organic zinc repair paint conforming to ASTM A 780 and recommended by the galvanizer. Galvanizing repair paint shall be 65 percent zinc by weight minimum, and shall be brush applied. The thickness of repair shall not be less than the coating thickness required by AASHTO M 111 or M 232 but not less than 3 mils DFT. Repair touch up shall not be permitted using aerosol spray, silver paint, bright paint, brite paint or aluminum paints.

Damaged shop applied paint shall be repaired in conformance with the solvent cleaning and abrasion pre-treatment requirements shown above or the paint manufacturer's recommendations, to a minimum thickness of the original system. Touch ups shall be such that the repair is not noticeable to the Engineer from a distance of six feet.

Warranty

The finish shall be inspected yearly and guaranteed not to chalk, peel, blister, or fade for five (5) years after acceptance of the project. If any painted signal equipment shows degradation in quality or color, the Contractor shall provide a plan for field repair or replacement of the equipment at no additional cost to the City of St Albans.

METHOD OF MEASUREMENT: Painting signal structures shall not be measured for payment but shall be incidental to the furnishing and installation of the relevant traffic signal system item, Item 678.15 Traffic Control Signal System (Main, Fairfield & Lake).

SECTION 752 – TRAFFIC CONTROL SIGNALS

General
Accessible Pedestrian Signals (APS) shall meet the standards of the American with Disabilities Act (ADA) and the most current edition of the Manual on Uniform Traffic Control Devices (MUTCD).

Wiring
The APS shall interface and be coordinated with the other features of a traffic control signal.

Audible Features. The APS shall include an audible indication of the Walk interval by either tone or voice and shall be audible from the near side of the associated crosswalk. If the tone for the Walk interval is the same as the locator tone of the pushbutton it shall have a faster repetition rate than the associated locator tone. The volume of the audible features shall have automatic volume adjustment based on the ambient noise levels. Audible features shall be no more than 5 dB louder than ambient sound up to a maximum volume of 89 dB measured at 36 inches (900 mm) from the device. When voice messages are used, they shall include a clear message that the walk interval is in effect and shall indicate to which crossing it applies. Audible features may be integral to the Pedestrian Pushbutton Assembly (752.14) or through a separate speaker housing.

752.14 PEDESTRIAN PUSHBUTTON ASSEMBLIES, is hereby modified by deleting in its entirety the first paragraph and inserting the following:

General. Pedestrian pushbutton assemblies shall meet all ADA requirements. The plunger head shall have a minimum diameter of 50 mm (2 inches) and the force required to operate the plunger shall not exceed 22.2 N (5 pounds). The pushbutton shall activate both the walk interval and the accessible pedestrian signal (if one is provided).

Color. The color of the pushbutton shall contrast visually with the housing or mounting.

Audible Features. The pushbutton assembly shall include an integral locator tone. The locator tone shall have a duration of 0.15 seconds or less and shall repeat at 1 second intervals. The locator tone shall be 2 dB minimum and 5 dB maximum above ambient noise levels and shall be responsive to ambient noise levels. The pushbutton assembly shall also include an audible indication that the button has been pushed.

Tactile Features. The pushbutton assembly shall incorporate a raised arrow. The arrow shall be raised 1/32 inch (0.8 mm) minimum and shall be 1 ½ inches (38 mm) minimum in length. The arrow color shall contrast with the background. The pushbutton shall vibrate to indicate that the walk interval is in effect.

Other Features. The pushbutton assembly shall incorporate a sunlight visible light that confirms that the button has been pushed. If optional features (such as extended

walk cycle length, audible beaconing or additional voice messages) are incorporated in an APS, the pushbutton assembly shall be capable of triggering such features upon an extended press of the button. Pushbuttons that provide optional features shall be marked with three Braille dots forming an equilateral triangle in the center of the pushbutton.

SECTION 900 – RADAR STOP BAR DETECTION SYSTEM

DESCRIPTION. This work shall consist of furnishing and installing radar stop bar detection system for a new traffic control system at the location indicated in the Plans and as directed by the Engineer.

The work under this Section shall be performed in accordance with these provisions, the Plans, and Section 678 of the Standard Specifications.

MATERIALS. All materials shall be as indicated on the Plans and Contract Documents –Wavetronix SmartSensor Matrix and manufacturer supplied cables.

GENERAL REQUIREMENTS. All associated electrical work performed and all materials installed shall be subject to inspection and approval of the State or Municipal Electrical Inspector, whichever is applicable. As a minimum, all work must meet the requirements of the National Electrical Code (NEC) and the National Electrical Safety Code (NESC).

SUBMITTALS.

a) Fabrication Drawings, the Contractor shall submit Fabrication Drawings or applicable cut sheets in accordance with Section 105 and 678.

b) Documentation Requirements, three (3) advance copies of equipment manuals furnished by the manufacturer shall be submitted to the Resident Engineer for review a minimum of ten days prior to the scheduled start of the first 24-hour operation test period. The Engineer will verify the manufacturer's equipment manual as part of the test and integration process. The equipment manual incorporating the Engineer's corrections and comments shall be integrated by the Contractor into the operations and maintenance manual. The manual shall as a minimum, include the following:

    1) Complete and accurate schematic diagrams.

    2) Complete installation and operation procedures.

    3) Complete performance specifications (functions, electrical, mechanical, and environmental) of the unit.

    4) Complete accurate troubleshooting, diagnostic, and maintenance procedures.

CONSTRUCTION REQUIREMENTS. Radar stop bar vehicle detection equipment shall be installed on proposed mast arm poles into the proposed controller cabinet, as required. Stop bar radar vehicle detection equipment shall be located or positioned as indicated on the Plans, unless otherwise directed by the Resident Engineer.

Prior to beginning any work, the Contractor and the Engineer will perform a joint inspection of the condition of the existing traffic control equipment and components. Any equipment that is found to be defective or damaged prior to beginning work shall be maintained in at least good condition until replaced under the Contract.

METHOD OF MEASUREMENT. The quantity of Special Provision (Radar Stop Bar Detection System) at the location specified to be measured for payment will be the number of radar stop bar detection system installed in the complete and accepted work.

BASIS OF PAYMENT. The accepted quantity of Special Provision (Radar Stop Bar Detection System) will be paid for at the Contract unit price. Payment will be full compensation for furnishing, handling, and placing the equipment and materials specified in the Contract Documents; removing and disposing of or abandoning any existing equipment and/or materials that are replaced or no longer needed as a result of installation of new equipment and/or materials; and for furnishing all labor, tools, equipment, and incidentals necessary to complete the work.

Payment will be made as follows:

a) Upon installation of a functioning system as indicated by a successful continuous 24-hour operation test period, 20 percent of the Contract unit price will be paid.

b) Thirty percent of the Contract unit price will be paid upon receipt by the Engineer of notice from all responsible Agency parties that all paperwork related to the system installation has been completed to the satisfaction of the Agency.

c) Thirty percent of the Contract unit price will be paid after successful completion of the 30-day test period.

d) The final 20 percent of the Contract unit price will be paid upon acceptance of the project.

At the discretion of the Engineer, the Contractor may be required to replace existing traffic signal system components not anticipated to require replacement, including poles and/or cabinets/controllers that are lost or damaged due to an accident. If requirement, such work will be considered Extra Work under Subsection 109.06 and additional payment will be allowed.

Payment will be made under:

Pay Item	Pay Unit
900.645 Special Provision (Radar Stop Bar Detection System)	Lump Sum

SPECIAL PROVISION

PAINTING TRAFFIC SIGNAL STRUCTURES

DESCRIPTION: This work shall consist of galvanizing and painting traffic signal equipment using a galvanizing-paint duplex coating system at the locations indicated in the Plans and as directed by the Engineer. All signal structures called out to be painted flat black shall be galvanized and powder coated with at least two coats of exterior grade powder coat paint suitable for a low speed traffic environment subject to high levels of salt.

The work under this Section shall be performed in accordance with these provisions, the Plans, and Sections 506, 678 and 752 of the Standard Specifications.

MATERIALS: Galvanizing-Paint Duplex Coating System for City of St Albans Signal Equipment

All steel components, except for stainless steel and anchor plates, shall be galvanized, pre-treated, and shop painted except as noted. Hardware need not be painted after galvanizing except for the portions exposed to view after installation, such as bolt heads, ends, nuts and washers, which may be field painted. Touch-up and repairs shall be made using paint from the same batch run as used for the shop-applied coats and supplied by the shop applicator.

Shop Drawings and Samples

The following provisions shall be made for hot-dip galvanizing and shop-applied paint for traffic signal hardware as shown on the plans or as directed. The requirements for thesurface preparation shall conform to Section 506.14 – Structural Steel, Surface Preparation, except as required herein, or approved otherwise.

The fabricator shall send the drawings to the galvanizer for review to note considerations particular to the galvanizing process and to coordinate any proposed modifications to the fabricated materials, prior to submission of shop drawings to the Engineer for approval.

One each 3-inch by 6-inch (approximate size) sample of material to be used in the work shall be galvanized and painted as specified herein and submitted to the Engineer and City of St Albans for approval of surface texture and color prior to full production galvanizing and painting. The fabricator of the material shall provide the galvanizer with samples taken from the same material to be used in the work.

The fabricator shall notify the galvanizer if the chemical composition of the steel to be galvanized exceeds the following limits, in order to determine its suitability for processing: 0.26% carbon, 0.24% silicon, 0.05% phosphorous, and 1.35% manganese.

Coating System Process and Material

The galvanizing-paint duplex coating system shall consist of the following generic type at the minimum coating thickness shown:

Coating	Description	Thickness
Galvanized	Hop-dip Galvanizing	Per Section 506.15
Pre-Treatment	SP1 Solvent Cleaning	
	SP7 Brush-off Blast Cleaning	
	Phosphate Cleaning (required when painting is more than 12 hours after galvanizing)	
Intermediate (force-cured)	High Build Epoxy Polyamide	3 mils DFT
Finish (force-cured)	Aliphatic Polyurethane	3 mils DFT

Galvanizing

Surfaces to be galvanized shall be zinc coated in conformance with AASHTO M 111M/M 111or AASHTO M 232M/M 232 utilizing the dry kettle process in a bath ofmolten zinc containing nickel (0.05% to 0.09% by weight). Hardware may be mechanically galvanized in conformance with AASHTO N 298 (ASTM B 695) Class 50.

The galvanized steel product shall be pre-treated and painted by one of the following methods:

Method 1 (under 12 hours). The galvanized steel shall be pre-treated. The first coat of paint shall be applied within twelve hours of galvanizing and within eight hours of blast cleaning (or surface abrasion by approved mechanical means).

Method 2 (over 12 hours). When the galvanized steel is to be pained more than 12 hours after galvanizing, the steel shall be pre-treated followed by a treatment of zinc phosphate applied within eight hours of blast cleaning (or surface abrasion by approved mechanical means). The first coat of paint shall be applied within twelve hours of phosphating.

Pre-Treatment

Prior to painting, the galvanized surface shall receive pre-treatment consisting of SSPC-SP1, Solvent Cleaning, and SSPC-SP7, Brush-Off Blast Cleaning or abraded by approved mechanical means, to remove detrimental contaminants and to thoroughly roughen the entire surface and produce a uniform anchor profile of 1-2 mils. The required thickness of the zinc coating shall be maintained and checked prior to painting. The pre-treatment shall meet the paint manufacturer's requirements. An additional pre-treatment or tie coat may be considered if required by the paint manufacturer and approved by the Engineer.

Blast cleaning shall be performed prior to the formation of "white rust" on the galvanized surface. If any "white rust" is detected by visual means, the galvanizing shall be stripped off and the steel re-galvanized in conformance with these specifications. "White rust" shall be defined in the Inspection of Products Hot Dip Galvanized After Fabrication, Table IV, by the American Galvanizers Association.

Paint coating shall be shop applied to the galvanized product within 15 days of galvanizing. Painting shall be performed inside a controlled environment meeting applicable atmospheric requirements as recommended by the coating manufacturer. Prior to pre-treatment, rough areas of galvanizing shall be ground smooth to achieve a uniform galvanized surface to accept paint.

Phosphating, when required as described herein, shall conform to zinc phosphate coating (light) of galvanized steel, D.O.D. specification TT-C-49D, or approved equal, and shall be applied according to the manufacturer's recommendation.

When phosphating is required, the phosphate applicator shall document in writing that the phosphating procedure is acceptable to the galvanizer and coating manufacturer prior to performing the work.

Painting

Each coat of paint shall be separately colored to contrast with other coats and to insure complete coverage. The previous coat shall be hidden by a single application of each coat. The final color of the painted product shall be flat black Federal Standard 595 Color #27038.

Intermediate and finish coats shall be shop applied under atmospheric conditions meeting the following minimum requirements: air and steel temperature of 50° F above the dew point. The finish coat shall be spray applied.

The intermediate and finish paint coats shall each be force cured in a heated booth maintained at a minimum temperature of 150° F for 2-4 hours.

The finished shop-coated material shall be handled with care using nylon slings, padded cables, etc. as required to protect the finished coating. The paint applicator shall be responsible for the condition of the finished coating until the material arrives at the job site.

Field Touch-up and Repairs

Damaged galvanized surfaces shall be repaired by applying an organic zinc repair paint conforming to ASTM A 780 and recommended by the galvanizer. Galvanizing repair paint shall be 65 percent zinc by weight minimum, and shall be brush applied. The thickness of repair shall not be less than the coating thickness required by AASHTO M 111 or M 232 but not less than 3 mils DFT. Repair touch up shall not be permitted using aerosol spray, silver paint, bright paint, brite paint or aluminum paints.

Damaged shop applied paint shall be repaired in conformance with the solvent cleaning and abrasion pre-treatment requirements shown above or the paint manufacturer's recommendations, to a minimum thickness of the original system. Touch ups shall be such that the repair is not noticeable to the Engineer from a distance of six feet.

Warranty

The finish shall be inspected yearly and guaranteed not to chalk, peel, blister, or fade for five (5) years after acceptance of the project. If any painted signal equipment shows degradation in quality or color, the Contractor shall provide a plan for field repair or replacement of the equipment at no additional cost to the City of St Albans.

METHOD OF MEASUREMENT: Painting signal structures shall not be measured for payment but shall be incidental to the furnishing and installation of the relevant traffic signal item.

Test Estimate

Estimated Cost:$8,980,947.32

Contingency: 0.00%

Estimated Total: $8,980,947.32

PROPOSED MOBILITY IMPROVEMENTS
CITY OF ST. ALBANS
COUNTY OF FRANKLIN
FEDERAL STREET MULTIMODAL CONNECTOR

Base Date: 05/05/16

Spec Year: 11

Unit System: E

Work Type: ROADS & HIGHWAY CONSTRUCTION

Highway Type: MINOR ARTERIAL

Urban/Rural Type: URBAN

Season: WINTER SEASON BIDS (10/16 - 4/14)

County: ST. ALBANS CITY

Midpoint of Latitude: 444839

Midpoint of Longitude: 0730508

District: NW

Federal/State Project Number: HPP 8000(17)

Estimate Type: 60% Preliminary plans

Prepared by VT ENG STAFF on 05/05/16

Line #	Item Number / Description / *Supplemental Description*	Quantity	Units	Unit Price	Extension
Group 0011: Roadway items					
0006	201.11 CLEARING AND GRUBBING, INCLUDING INDIVIDUAL TREES AND STUMPS	2.750	ACRE	$15,000.00000	$41,250.00
0007	201.15 REMOVING MEDIUM TREES	13.000	EACH	$1,193.52000	$15,515.76
0008	201.16 REMOVING LARGE TREES	1.000	EACH	$1,330.36083	$1,330.36
0009	201.20 REMOVING MEDIUM STUMPS	13.000	EACH	$165.00000	$2,145.00
0010	201.21 REMOVING LARGE STUMPS	1.000	EACH	$175.00000	$175.00
0011	203.15 COMMON EXCAVATION	28,000.000	CY	$7.70297	$215,683.16
0012	203.16 SOLID ROCK EXCAVATION	500.000	CY	$23.19635	$11,598.18
0013	203.27 UNCLASSIFIED EXCAVATION	10.000	CY	$32.11476	$321.15
0014	203.28 EXCAVATION OF SURFACES AND PAVEMENTS	13.000	CY	$17.14089	$222.83
0015	203.30 EARTH BORROW	1,000.000	CY	$9.48845	$9,488.45
0016	203.31 SAND BORROW	4,000.000	CY	$16.32890	$65,315.60
0017	204.20 TRENCH EXCAVATION OF EARTH	1,960.000	CY	$11.87926	$23,283.35
0018	204.21 TRENCH EXCAVATION OF ROCK	160.000	CY	$69.31596	$11,090.55
0019	204.25 STRUCTURE EXCAVATION	100.000	CY	$52.00157	$5,200.16
0020	204.30 GRANULAR BACKFILL FOR STRUCTURES	100.000	CY	$34.93268	$3,493.27
0021	210.10 COLD PLANING, BITUMINOUS PAVEMENT	5,750.000	SY	$2.91771	$16,776.83
0022	301.26 SUBBASE OF CRUSHED GRAVEL, FINE GRADED	500.000	CY	$44.66748	$22,333.74
0023	301.35 SUBBASE OF DENSE GRADED CRUSHED STONE	22,100.000	CY	$27.17132	$600,486.17
0024	404.65 EMULSIFIED ASPHALT	200.000	CWT	$30.94953	$6,189.91
0025	406.25 BITUMINOUS CONCRETE PAVEMENT	14,400.000	TON	$119.58434	$1,722,014.50
0026	406.28 AIR VOIDS PAY ADJUSTMENT (N.A.B.I.)	1.000	LU	$1.00000	$1.00
0027	406.29 MAT DENSITY PAY ADJUSTMENT (N.A.B.I.)	1.000	LU	$1.00000	$1.00
0028	406.50 PRICE ADJUSTMENT, ASPHALT CEMENT (N.A.B.I.)	1.000	LU	$1.00000	$1.00
0029	601.0810 15" RCP CLASS III	980.000	LF	$50.00000	$49,000.00

This may be high. As an Agency we have not used this item a lot in the last 5 years. as such this price is an average based on quantities that are all less than 1000 ton. The last use over 10,000 ton was in 2010 and was $76/Ton. Using the superpave price as a comparison prices for this quantity would typically be about $85

Line #	Item Number / Description / *Supplemental Description*	Quantity	Units	Unit Price	Extension
0030	601.0815 18" RCP CLASS III	4,070.000	LF	$59.07810	$240,447.87
0031	601.2603 8" CPEP(SL)	10.000	LF	$30.00000	$300.00
0032	601.2610 15" CPEP(SL)	18.000	LF	$28.91560	$520.48
0033	601.2620 24" CPEP(SL)	94.000	LF	$68.15335	$6,406.41
0034	604.18 PRECAST REINFORCED CONCRETE DROP INLET WITH CAST IRON GRATE	5.000	EACH	$3,849.99989	$19,250.00
0035	604.20 PRECAST REINFORCED CONCRETE CATCH BASIN WITH CAST IRON GRATE	61.000	EACH	$2,494.93002	$152,190.73
0036	604.20 PRECAST REINFORCED CONCRETE CATCH BASIN WITH CAST IRON GRATE	14.000	EACH	$2,500.00000	$35,000.00
0037	604.21 PRECAST REINFORCED CONCRETE MANHOLE WITH CAST IRON COVER	53.000	EACH	$3,121.25000	$165,426.25
0038	604.21 PRECAST REINFORCED CONCRETE MANHOLE WITH CAST IRON COVER	6.000	EACH	$3,600.00000	$21,600.00
0039	613.12 STONE FILL, TYPE III	115.000	CY	$46.51721	$5,349.48
0040	616.20 GRANITE SLOPE EDGING	510.000	LF	$35.99739	$18,358.67
0041	616.21 VERTICAL GRANITE CURB	1,930.000	LF	$32.11602	$61,983.92
0042	616.28 CAST-IN-PLACE CONCRETE CURB, TYPE B	14,750.000	LF	$16.82202	$248,124.80
0043	618.30 DETECTABLE WARNING SURFACE	675.000	SF	$45.35532	$30,614.84
0044	620.12 CHAIN-LINK FENCE, 6 FEET	1,175.000	LF	$16.90986	$19,869.09
0045	620.16 GATE FOR CHAIN-LINK FENCE, 6 FEET	40.000	LF	$59.61438	$2,384.58
0046	620.21 BRACING ASSEMBLY FOR CHAIN-LINK FENCE, 6 FEET	14.000	EACH	$141.22265	$1,977.12
0047	620.55 REMOVAL OF EXISTING FENCE	1,045.000	LF	$1.50463	$1,572.34
0048	621.21 HD STEEL BEAM GUARDRAIL, GALVANIZED	58.000	LF	$30.69915	$1,780.55
0049	621.60 ANCHOR FOR STEEL BEAM RAIL	4.000	EACH	$841.45307	$3,365.81
0050	621.72 GUARDRAIL APPROACH SECTION, GALVANIZED 2 RAIL BOX BEAM	4.000	EACH	$4,355.11725	$17,420.47
0051	621.80 REMOVAL AND DISPOSAL OF GUARDRAIL	820.000	LF	$1.74118	$1,427.77
0052	630.10 UNIFORMED TRAFFIC OFFICERS	1,225.000	HR	$59.37325	$72,732.23
0053	630.15 FLAGGERS	2,550.000	HR	$29.42506	$75,033.90
0054	635.11 MOBILIZATION/DEMOBILIZATION	1.000	LS	$590,000.00000	$590,000.00
0055	641.10 TRAFFIC CONTROL	1.000	LS	$150,000.00000	$150,000.00

Line #	Item Number / Description / *Supplemental Description*	Quantity	Units	Unit Price	Extension
0056	641.15 PORTABLE CHANGEABLE MESSAGE SIGN	24.000	EACH	$2,462.65590	$59,103.74
0057	646.400 DURABLE 4 INCH WHITE LINE	18,000.000	LF	$0.66825	$12,028.50
0058	646.410 DURABLE 4 INCH YELLOW LINE	22,500.000	LF	$0.85692	$19,280.70
0059	646.452 DURABLE 8 INCH YELLOW LINE, THERMOPLASTIC	830.000	LF	$1.05288	$873.89
0060	646.480 DURABLE 24 INCH STOP BAR	470.000	LF	$7.30633	$3,433.98
0061	646.490 DURABLE LETTER OR SYMBOL	175.000	EACH	$65.22436	$11,414.26
0062	646.500 DURABLE CROSSWALK MARKING	1,305.000	LF	$9.66509	$12,612.94
0063	646.510 DURABLE RAILROAD CROSSING SYMBOL	1.000	EACH	$650.00000	$650.00
0064	646.600 TEMPORARY 4 INCH WHITE LINE	18,000.000	LF	$0.14434	$2,598.12
0065	646.610 TEMPORARY 4 INCH YELLOW LINE	22,500.000	LF	$0.14523	$3,267.68
0066	646.680 TEMPORARY 24 INCH STOP BAR	470.000	LF	$2.29965	$1,080.84
0067	646.690 TEMPORARY LETTER OR SYMBOL	175.000	EACH	$34.75926	$6,082.87
0068	646.700 TEMPORARY CROSSWALK MARKING	1,305.000	LF	$5.99315	$7,821.06
0069	649.31 GEOTEXTILE UNDER STONE FILL	1,950.000	SY	$2.92951	$5,712.54
0070	646.76 LINE STRIPING TARGETS	1,000.000	EACH	$1.40086	$1,400.86
0072	651.15 SEED	550.000	LB	$7.68382	$4,226.10
0073	651.18 FERTILIZER	2,285.000	LB	$2.65971	$6,077.44
0074	651.20 AGRICULTURAL LIMESTONE	10.000	TON	$583.35982	$5,833.60
0075	651.25 HAY MULCH	10.000	TON	$439.17007	$4,391.70
0076	651.35 TOPSOIL	2,800.000	CY	$27.10090	$75,882.52
0077	675.20 TRAFFIC SIGNS, TYPE A	930.000	SF	$11.71637	$10,896.22
0079	675.341 SQUARE TUBE SIGN POST AND ANCHOR	2,615.000	LF	$7.85178	$20,532.40
0080	675.50 REMOVING SIGNS	745.000	EACH	$4.33783	$3,231.68
0082	677.30 REMOVE EXISTING OVERHEAD SIGN ASSEMBLY, CANTILEVER *SIGN TRUSS OVER US RTE 7 N/O I-89 CONNECTOR*	1.000	EACH	$7,500.00000	$7,500.00
0083	678.15 TRAFFIC CONTROL SIGNAL SYSTEM, INTERSECTION *(FEDERAL STREET & LOWER NEWTON)*	1.000	EACH	$90,000.00000	$90,000.00
0084	678.15 TRAFFIC CONTROL SIGNAL SYSTEM, INTERSECTION *(LOWER NEWTON & N. MAIN)*	1.000	EACH	$120,000.00000	$120,000.00
0085	678.15 TRAFFIC CONTROL SIGNAL SYSTEM, INTERSECTION *(S MAIN & NASON CONNECTOR)*	1.000	EACH	$150,000.00000	$150,000.00

Line #	Item Number / Description / *Supplemental Description*	Quantity	Units	Unit Price	Extension
0086	678.15 TRAFFIC CONTROL SIGNAL SYSTEM, INTERSECTION *(LAKE STREET AND FEDERAL STREET)*	1.000	EACH	$190,000.00000	$190,000.00
0087	678.21 ELECTRICAL CONDUIT	1,070.000	LF	$15.00000	$16,050.00
0088	678.23 WIRED CONDUIT *(2-INCH)*	1,770.000	LF	$20.00000	$35,400.00
0089	678.23 WIRED CONDUIT *(3-INCH)*	350.000	LF	$25.00000	$8,750.00
0090	678.25 PULL BOX, STANDARD	3.000	EACH	$3,796.67753	$11,390.03
0091	678.30 ELECTRICAL CONDUIT SLEEVE	635.000	LF	$32.40555	$20,577.52
0092	678.45 REMOVAL OF EXISTING TRAFFIC CONTROL SIGNAL SYSTEM *(LOWER NEWTON & N. MAIN)*	1.000	EACH	$4,695.00000	$4,695.00
0093	679.21 LIGHT POLE BASE	17.000	EACH	$1,000.00000	$17,000.00
0098	679.55 POWER DROP STANCHION, STREET LIGHTING	1.000	EACH	$5,006.33154	$5,006.33
0100	900.620 SPECIAL PROVISION *(LIGHTING CONTROL PANEL)*	1.000	EACH	$5,000.00000	$5,000.00
0102	900.645 SPECIAL PROVISION (RADAR STOP BAR DETECTOR SYSTEM, N MAIN/UPPER/LOWER NEWTON)	1.000	LS	$10,000.00000	$10,000.00
0103	900.645 SPECIAL PROVISION (RADAR STOP BAR DETECTOR SYSTEM, FEDERAL/LOWER NEWTON)	1.000	LS	$15,000.00000	$15,000.00
0104	900.645 SPECIAL PROVISION (RADAR STOP BAR DETECTOR SYSTEM, LAKE/FEDERAL/CATEHRINE)	1.000	LS	$15,000.00000	$15,000.00
0105	900.645 SPECIAL PROVISION (RADAR STOP BAR DETECTION SYSTEM, S MAIN/NASON CONNECTOR)	1.000	LS	$20,000.00000	$20,000.00
0106	900.645 SPECIAL PROVISION *(CONSTRUCTION VIBERATION AND CRACK MONITORING)*	1.000	LS	$10,000.00000	$10,000.00
0107	900.645 SPECIAL PROVISION *(MAINTENANCE OF PEDESTRIAN TRAFFIC)*	1.000	LS	$30,000.00000	$30,000.00
0108	900.670 SPECIAL PROVISION *(COBBLE STONE PAVERS)(ROUNDABOUT TRUCK APRON)*	1,750.000	SF	$8.00000	$14,000.00
0109	900.670 SPECIAL PROVISION *(BRICK PAVERS)*	1,090.000	SF	$21.00000	$22,890.00
0110	900.675 SPECIAL PROVISION (HAND PLACED BITUMINOUS CONCRETE MATERIAL, DRIVES)	3,595.000	SY	$45.00000	$161,775.00
0111	900.675 SPECIAL PROVISION (PORTLAND CEMENT CONCRETE SIDEWALK, 6 INCH)	6,700.000	SY	$85.00000	$569,500.00
0112	900.675 SPECIAL PROVISION (PORTLAND CEMENT CONCRETE SIDELAK, 8 INCH)	670.000	SY	$100.00000	$67,000.00

Total for Group 0011:$6,661,021.80

Line #	Item Number / Description / *Supplemental Description*	Quantity	Units	Unit Price	Extension

Group 0012: ROADWAY NON-PAR FEDERAL

0113	900.608 SPECIAL PROVISION *(MANAGEMENT OF CONTAMINATED SOIL)*	3,800.000	CY	$120.00000	$456,000.00

Total for Group 0012:$456,000.00

Group 0041: ILANDSCAPING & LIGHTING

0114	656.20 EVERGREEN TREES	17.000	EACH	$174.73997	$2,970.58
0115	656.30 DECIDUOUS TREES	145.000	EACH	$203.29763	$29,478.16
0116	656.35 DECIDUOUS SHRUBS	245.000	EACH	$42.24619	$10,350.32
0117	656.41 PERENNIALS	800.000	EACH	$3.41488	$2,731.90
0118	900.620 SPECIAL PROVISION *(LIGHTING CONTROL PANEL)*	1.000	EACH	$5,000.00000	$5,000.00
0119	900.620 SPECIAL PROVISION TRASH RECEPTACLE	2.000	EACH	$1,000.00000	$2,000.00
0120	900.620 SPECIAL PROVISION RECYCLING TRASH RECEPTACLE	2.000	EACH	$1,500.00000	$3,000.00
0121	900.620 SPECIAL PROVISION *(ORNAMENTAL STREET LIGHT-FIXTURE A)*	17.000	EACH	$6,750.00000	$114,750.00
0122	900.640 SPECIAL PROVISION *(BULL NOSE VERTICAL GRANITE CURB0*	220.000	LF	$100.00000	$22,000.00
0196	900.640 SPECIAL PROVISION (WOOD FENCE FOR VISUAL BARRIER)	1,050.000	LF	$50.00000	$52,500.00

Total for Group 0041:$244,780.96

Group 0051: EROSION CONTROL

0123	608.30 POWER BROOM RENTAL, TYPE I	160.000	HR	$35.07895	$5,612.63
0124	609.10 DUST CONTROL WITH WATER	1,700.000	MGAL	$8.48056	$14,416.95
0125	649.51 GEOTEXTILE FOR SILT FENCE	6,600.000	SY	$3.71238	$24,501.71
0126	649.515 GEOTEXTILE FOR SILT FENCE, WOVEN WIRE REINFORCED	750.000	SY	$11.23667	$8,427.50
0127	652.10 EPSC PLAN	1.000	LS	$18,000.00000	$18,000.00
0128	652.20 MONITORING EPSC PLAN	1,150.000	HR	$39.56671	$45,501.72
0129	653.21 PERMANENT EROSION MATTING	115.000	SY	$5.69026	$654.38
0130	653.25 TEMPORARY STONE CHECK DAM, TYPE I	36.000	CY	$49.57951	$1,784.86

Line #	Item Number / Description / *Supplemental Description*	Quantity	Units	Unit Price	Extension
0131	653.35 VEHICLE TRACKING PAD	600.000	CY	$26.92220	$16,153.32
0132	653.41 INLET PROTECTION DEVICE, TYPE II	90.000	EACH	$162.38968	$14,615.07
0133	653.55 PROJECT DEMARCATION FENCE	6,300.000	LF	$1.65427	$10,421.90

Total for Group 0051:$160,090.04

Group 0082: UTILTIES NON-PAR FEDERAL

0134	203.28 EXCAVATION OF SURFACES AND PAVEMENTS	140.000	CY	$17.14089	$2,399.72
0135	203.31 SAND BORROW	200.000	CY	$16.32890	$3,265.78
0136	204.20 TRENCH EXCAVATION OF EARTH	3,962.000	CY	$11.87926	$47,065.63
0137	204.22 TRENCH EXCAVATION OF EARTH, EXPLORATORY (N.A.B.I.)	350.000	CY	$75.00000	$26,250.00
0138	204.25 STRUCTURE EXCAVATION	25.000	CY	$52.00157	$1,300.04
0139	204.30 GRANULAR BACKFILL FOR STRUCTURES	25.000	CY	$34.93268	$873.32
0140	604.22 SANITARY SEWER MANHOLE	1.000	EACH	$3,606.44250	$3,606.44
0141	604.418 REHAB. DROP INLETS, CATCH BASINS, OR MANHOLES, CLASS III	5.000	EACH	$1,741.38194	$8,706.91
0142	628.35 PVC SEWER PIPE 8" san sewr	172.000	LF	$40.00000	$6,880.00
0143	628.35 PVC SEWER PIPE 15" san sewer	55.000	LF	$58.00000	$3,190.00
0144	628.42 TRANSFER TO NEW SYSTEM, SANITARY SEWER	1.000	LS	$8,000.00000	$8,000.00
0145	629.23 SEAMLESS COPPER WATER TUBE *3/4"*	1,310.000	LF	$35.00000	$45,850.00
0146	629.23 SEAMLESS COPPER WATER TUBE *1"*	25.000	LF	$95.00000	$2,375.00
0147	629.23 SEAMLESS COPPER WATER TUBE *2"*	25.000	LF	$155.00000	$3,875.00
0148	629.24 DUCTILE IRON PIPE, CEMENT-LINED *4"*	50.000	LF	$38.00000	$1,900.00
0150	629.24 DUCTILE IRON PIPE, CEMENT-LINED *8"*	620.000	LF	$44.00000	$27,280.00
0151	629.24 DUCTILE IRON PIPE, CEMENT-LINED *12"*	3,408.000	LF	$65.00000	$221,520.00
0152	629.25 EXTENSION SERVICE BOX AND CURB STOP *3/4"*	45.000	EACH	$300.00000	$13,500.00
0153	629.25 EXTENSION SERVICE BOX AND CURB STOP *1"*	1.000	EACH	$400.00000	$400.00

Line #	Item Number / Description / *Supplemental Description*	Quantity	Units	Unit Price	Extension
0154	629.25 EXTENSION SERVICE BOX AND CURB STOP *2"*	1.000	EACH	$500.00000	$500.00
0155	629.27 GATE VALVE WITH VALVE BOX *4"*	3.000	EACH	$1,200.00000	$3,600.00
0156	629.27 GATE VALVE WITH VALVE BOX *6"*	6.000	EACH	$1,500.00000	$9,000.00
0157	629.27 GATE VALVE WITH VALVE BOX *8"*	5.000	EACH	$1,800.00000	$9,000.00
0158	629.27 GATE VALVE WITH VALVE BOX *12"*	17.000	EACH	$2,500.00000	$42,500.00
0159	629.28 HYDRANT	8.000	EACH	$3,159.09091	$25,272.73
0160	629.25 RELOCATE HYDRANT 6"	6.000	EACH	$618.15143	$3,708.91
0161	629.35 TAPPING SLEEVE AND VALVE WITH VALVE BOX	1.000	EACH	$6,000.00000	$6,000.00
0162	629.39 CORPORATION STOP *3/4"*	3.000	EACH	$200.00000	$600.00
0163	629.39 CORPORATION STOP *1"*	47.000	EACH	$250.00000	$11,750.00
0164	629.39 CORPORATION STOP *2"*	3.000	EACH	$350.00000	$1,050.00
0165	629.42 TRANSFER TO NEW SYSTEM, WATER SYSTEM	1.000	LS	$25,000.00000	$25,000.00
0166	629.54 CRUSHED STONE BEDDING	947.000	TON	$36.83333	$34,881.16
0167	900.620 SPECIAL PROVISION *(REINSTATE SERVICES)*	26.000	EACH	$175.00000	$4,550.00
0168	900.620 SPECIAL PROVISION *(TRIM PROTRUDING SERVICES)*	6.000	EACH	$400.00000	$2,400.00
0169	900.640 SPECIAL PROVISION *(CURED IN PLACE PIPE-CPP-LINER(8"))*	219.000	LF	$45.00000	$9,855.00
0170	900.640 SPECIAL PROVISION (CURED IN PLACE PIPE-CPP-LINER(15"))	561.000	LF	$55.00000	$30,855.00
0171	900.640 SPECIAL PROVISION (CURED IN PLACE PIPE-CPP-LINER(21"))	5,420.000	LF	$60.00000	$325,200.00
0172	900.640 SPECIAL PROVISION (CURED IN PLACE PIPE-CCP-LINER (12"))	231.000	LF	$80.00000	$18,480.00

Total for Group 0082:$992,440.64

Group 0101: RAILROAD ITEMS

0173	900.650 SPECIAL PROVISION *(MAINTENANCE OF RAILROAD)*	1.000	LU	$87,000.00000	$87,000.00

Line #	Item Number / Description / *Supplemental Description*	Quantity	Units	Unit Price	Extension

Total for Group 0101:$87,000.00

Group 0181: DEMOLITION OF BUILDINGS

0174	202.10 DEMOLITION AND DISPOSAL OF BUILDING *LEWIS*	1.000	EACH	$15,000.00000	$15,000.00
0175	202.10 DEMOLITION AND DISPOSAL OF BUILDING *STANISLAS*	1.000	EACH	$15,000.00000	$15,000.00

Total for Group 0181:$30,000.00

Group 0999: FULL C.E.ITEMS

0176	631.10 FIELD OFFICE, ENGINEERS	1.000	LS	$54,000.00000	$54,000.00
0177	631.16 TESTING EQUIPMENT, CONCRETE	1.000	LS	$5,400.00000	$5,400.00
0178	631.17 TESTING EQUIPMENT, BITUMINOUS	1.000	LS	$5,400.00000	$5,400.00
0179	631.26 FIELD OFFICE TELEPHONE (N.A.B.I.)	8,100.000	DL	$1.00000	$8,100.00

Total for Group 0999:$72,900.00

Group 2111: Stevens Brook X-ing

box culvert

0180	203.27 UNCLASSIFIED CHANNEL EXCAVATION	10.000	CY	$32.11476	$321.15
0181	204.22 TRENCH EXCAVATION OF EARTH, EXPLORATORY (N.A.B.I.)	1.000	CY	$75.00000	$75.00
0182	208.30 COFFERDAM EXCAVATION, EARTH	775.000	CY	$29.82245	$23,112.40
0183	208.35 COFFERDAM EXCAVATION, ROCK	100.000	CY	$241.47372	$24,147.37
0184	208.40 COFFERDAM	1.000	LS	$0.00000	$0.00
0185	514.10 WATER REPELLENT, SILANE	9.000	GAL	$84.18449	$757.66
0186	525.33 BRIDGE RAILING, GALVANIZED 2 RAIL BOX BEAM	35.000	LF	$106.78895	$3,737.61
0187	529.15 REMOVAL OF STRUCTURE	1.000	EACH	$25,000.00000	$25,000.00
0188	540.10 PRECAST CONCRETE STRUCTURE 16'-0" X 7'-6" X 34'-3" BOX	1.000	LS	$180,000.00000	$180,000.00
0189	613.10 STONE FILL, TYPE I	20.000	CY	$57.90392	$1,158.08
0190	613.11 STONE FILL, TYPE II	40.000	CY	$57.72783	$2,309.11
0191	621.80 REMOVAL AND DISPOSAL OF GUARDRAIL	180.000	LF	$1.74118	$313.41
0192	649.61 GEOTEXTILE FOR FILTER CURTAIN	20.000	SY	$40.43862	$808.77
0193	653.45 FILTER BAG	2.000	EACH	$286.66174	$573.32
0194	900.608 SPECIAL PROVISION *(COARSE AGGREGATE BACKFILL)*	150.000	CY	$36.00000	$5,400.00

Line #	Item Number / Description / *Supplemental Description*	Quantity	Units	Unit Price	Extension
0195	900.608 SPECIAL PROVISION *(STONE FILL, STREAM BED MATERIAL)*	120.000	CY	$75.00000	$9,000.00

Total for Group 2111:$276,713.88