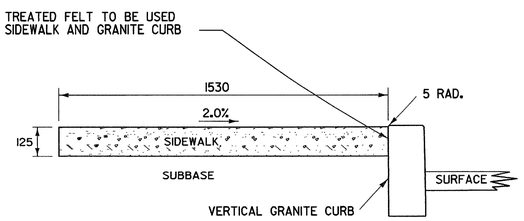

PORTLAND CEMENT CONCRETE SIDEWALK, 125
(WITH VERTICAL GRANITE CURB)

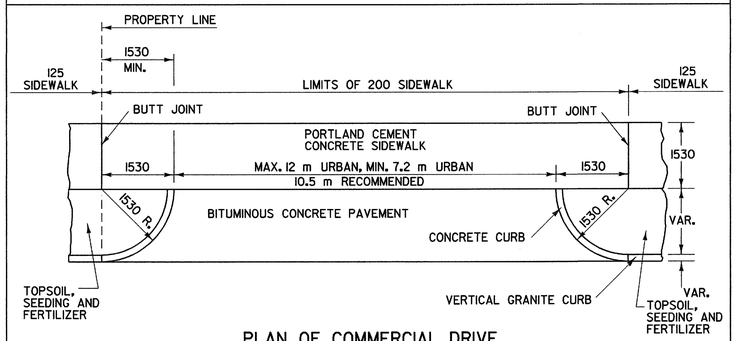

PLAN OF COMMERCIAL DRIVE

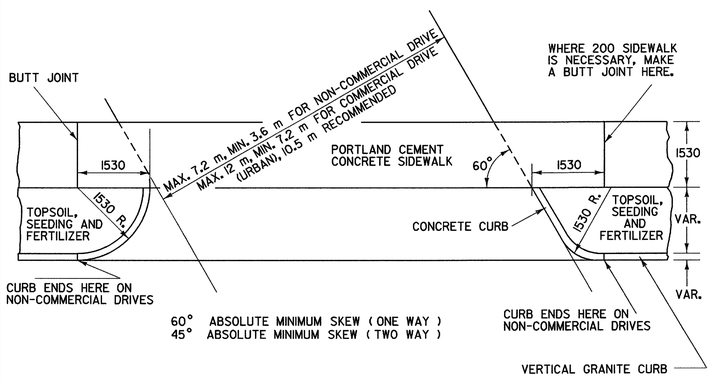

PLAN OF SKEW DRIVE

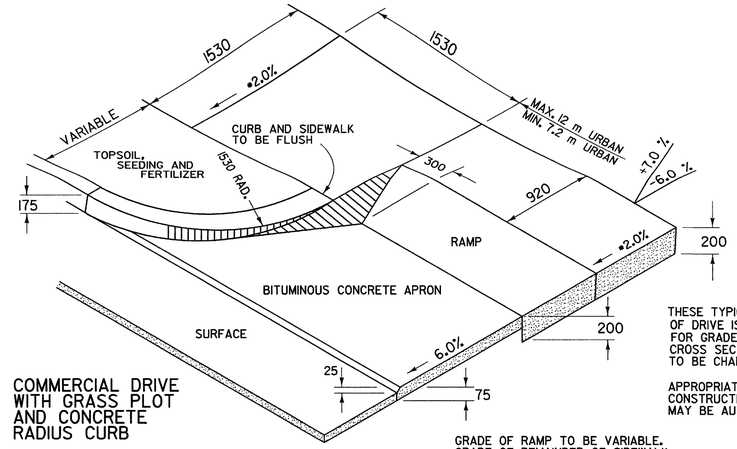

COMMERCIAL DRIVE WITH GRASS PLOT AND CONCRETE RADIUS CURB

GRADE OF RAMP TO BE VARIABLE. GRADE OF REMAINDER OF SIDEWALK TO BE •2.0%. CONSTRUCTION JOINT TO BE MADE WHERE RAMP MEETS REMAINDER OF SIDEWALK IN DRIVE AREA.

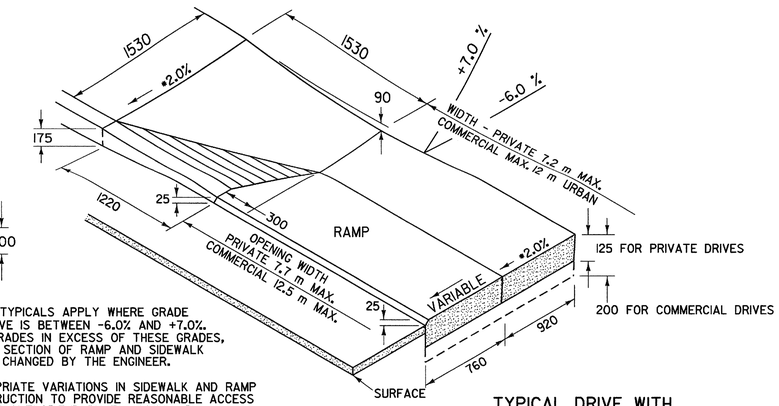

THESE TYPICALS APPLY WHERE GRADE OF DRIVE IS BETWEEN -6.0% AND +7.0%. FOR GRADES IN EXCESS OF THESE GRADES, CROSS SECTION OF RAMP AND SIDEWALK TO BE CHANGED BY THE ENGINEER.

APPROPRIATE VARIATIONS IN SIDEWALK AND RAMP CONSTRUCTION TO PROVIDE REASONABLE ACCESS MAY BE AUTHORIZED BY THE ENGINEER.

TYPICAL DRIVE WITH 1530 SIDEWALK ADJACENT TO VERTICAL GRANITE CURB

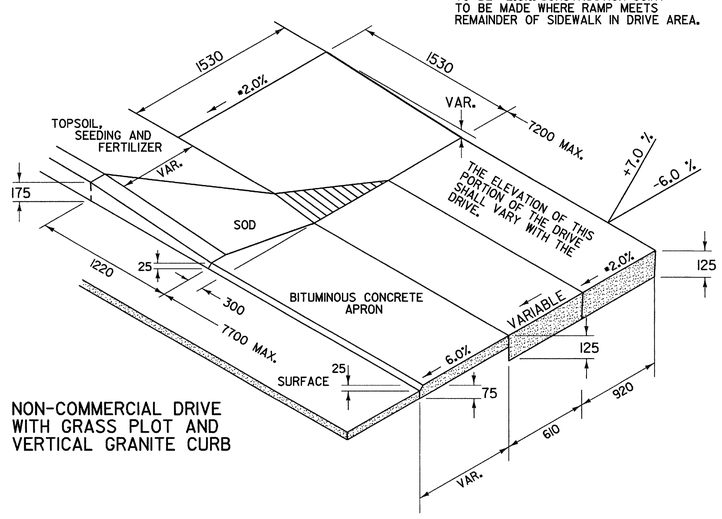

NON-COMMERCIAL DRIVE WITH GRASS PLOT AND VERTICAL GRANITE CURB

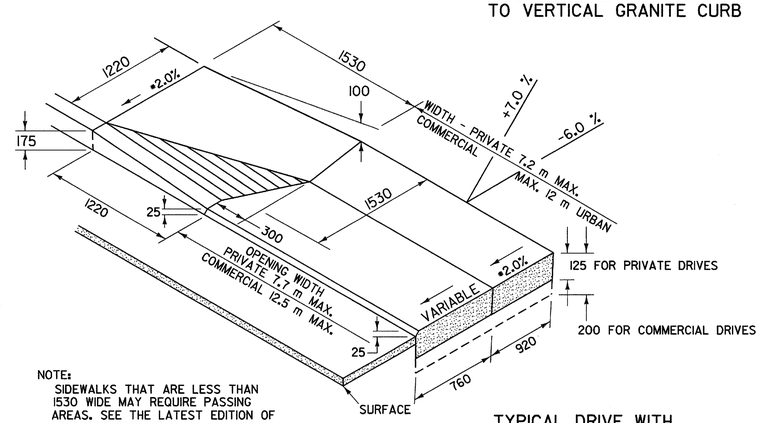

NOTE:
SIDEWALKS THAT ARE LESS THAN 1530 WIDE MAY REQUIRE PASSING AREAS. SEE THE LATEST EDITION OF ADA REQUIREMENTS.

TYPICAL DRIVE WITH 1220 SIDEWALK ADJACENT TO VERTICAL GRANITE CURB

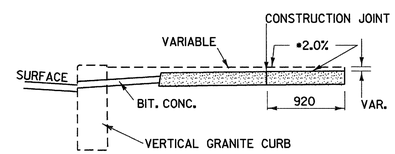

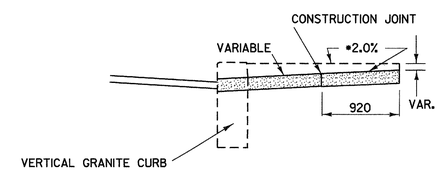

RAMPS TO BE PAID FOR AS PORTLAND CEMENT CONCRETE SIDEWALK
• IN NO CASE SHALL THE CROSS SLOPE OF AN ACCESSIBLE ROUTE EXCEED 2.0%.

NOTE:
FOR FURTHER DETAILS REGARDING DRIVEWAYS, SEE STANDARD B-71M.

NOTE: ALL DIMENSIONS ARE IN MILLIMETERS (mm) EXCEPT WHERE NOTED.

REVISIONS AND CORRECTIONS

JUNE 13, 1997 - ORIGINAL APPROVAL DATE
JAN.3,2000 - MINOR EDITORIAL CHANGES

APPROVED

DIRECTOR OF PROJECT DEVELOPMENT

ROADWAY AND TRAFFIC DESIGN ENGINEER

PORTLAND CEMENT CONCRETE SIDEWALK DRIVE ENTRANCES WITH VERTICAL GRANITE CURB

VERMONT AGENCY OF TRANSPORTATION

VAOT Metric STANDARD C-2BM