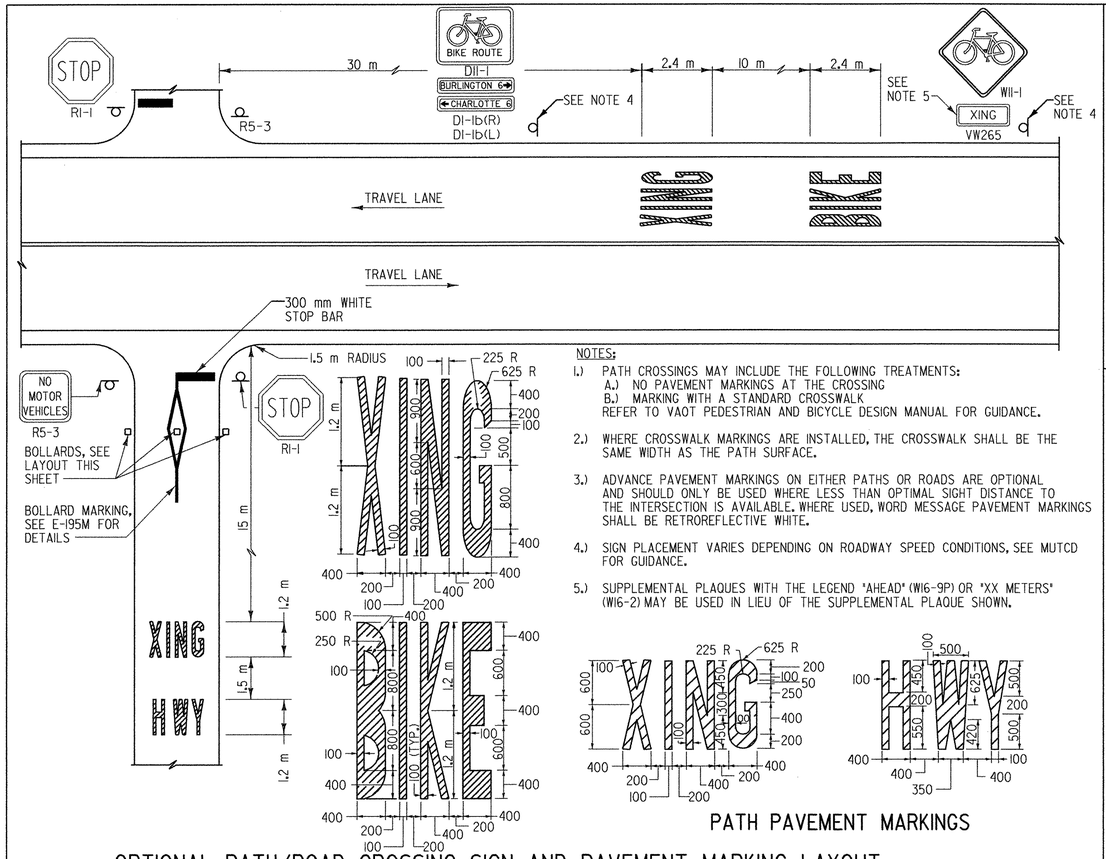

OPTIONAL PATH/ROAD CROSSING SIGN AND PAVEMENT MARKING LAYOUT

NOTES:

1.) PATH CROSSINGS MAY INCLUDE THE FOLLOWING TREATMENTS:
A.) NO PAVEMENT MARKINGS AT THE CROSSING
B.) MARKING WITH A STANDARD CROSSWALK
REFER TO VAOT PEDESTRIAN AND BICYCLE DESIGN MANUAL FOR GUIDANCE.

2.) WHERE CROSSWALK MARKINGS ARE INSTALLED, THE CROSSWALK SHALL BE THE SAME WIDTH AS THE PATH SURFACE.

3.) ADVANCE PAVEMENT MARKINGS ON EITHER PATHS OR ROADS ARE OPTIONAL AND SHOULD ONLY BE USED WHERE LESS THAN OPTIMAL SIGHT DISTANCE TO THE INTERSECTION IS AVAILABLE. WHERE USED, WORD MESSAGE PAVEMENT MARKINGS SHALL BE RETROREFLECTIVE WHITE.

4.) SIGN PLACEMENT VARIES DEPENDING ON ROADWAY SPEED CONDITIONS, SEE MUTCD FOR GUIDANCE.

5.) SUPPLEMENTAL PLAQUES WITH THE LEGEND 'AHEAD' (W16-9P) OR 'XX METERS' (W16-2) MAY BE USED IN LIEU OF THE SUPPLEMENTAL PLAQUE SHOWN.

PATH PAVEMENT MARKINGS

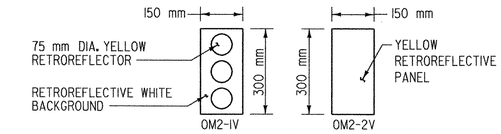

TYPE 2 OBJECT MARKERS

MATERIALS:
THE SIGN BASE MATERIALS SHALL BE THE FOLLOWING MINIMUM THICKNESS:

FLAT SHEET ALUMINUM 1.5 mm

THE REFLECTIVE MATERIAL SHALL BE ASTM TYPE III WHITE OR YELLOW REFLECTIVE SHEETING APPLIED TO THE ENTIRE BACKGROUND OF THE SIGN. YELLOW RETROREFLECTOR ON OM2-IV IS A DELINEATOR AS DETAILED ON E-198M.

SPECIFICATIONS:
OBJECT MARKERS SHALL MEET THE VERMONT STANDARD SPECIFICATIONS FOR TRAFFIC SIGNS AS PRESCRIBED IN THE VAOT STANDARD SPECIFICATIONS FOR CONSTRUCTION.

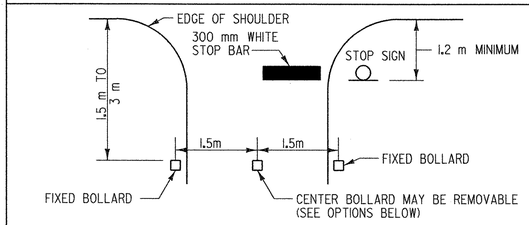

BOLLARD AND STOP BAR LAYOUT

NOTES:

1.) BOLLARDS ARE NOT A REQUIREMENT AT EVERY ROAD CROSSING. THEIR USE SHOULD BE BASED ON PREVAILING CONDITIONS INCLUDING PATH USE AND VOLUME, ROADWAY VOLUME AND ADEQUACY OF SIGHT DISTANCE. REFER TO VAOT PEDESTRIAN AND BICYCLE FACILITY PLANNING AND DESIGN MANUAL FOR GUIDANCE.

2.) MAY USE ONLY SINGLE BOLLARD CENTERED IN PATH.

3.) IF USING MORE THAN ONE BOLLARD, USE AN ODD NUMBER WITH ADDITIONAL BOLLARDS PLACED BEYOND EDGE OF PATH SURFACE.

4.) MAY REDUCE BOLLARD SPACING TO 900 mm MINIMUM TO LIMIT PATH USE BY ATV'S OR SNOWMOBILES, IN THIS CASE, BOLLARDS WILL BE PLACED IN PATH SURFACE.

5.) LOCATE STOP BAR AND SIGN AS CLOSE TO DESIRED STOPPING POINT AS POSSIBLE. STOP BAR AND SIGN SHOULD NOT BE LOCATED AT OR BEHIND BOLLARDS.

6.) THE DESIRED STOPPING POINT IS THE LOCATION BASED ON SITE CONDITIONS THAT BEST ALLOWS PATH USERS TO VIEW APPROACHING TRAFFIC.

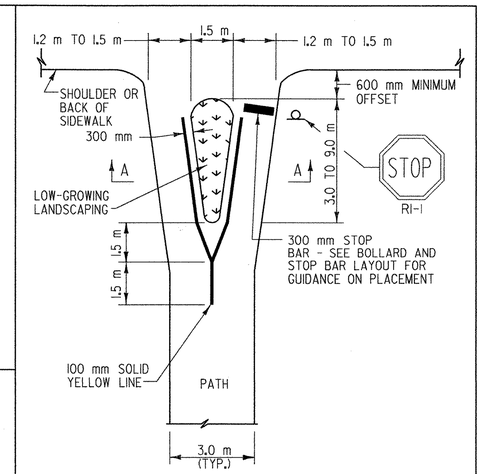

SPLIT PATH AT ROAD CROSSING

NOTES:

1.) THIS TREATMENT MAY BE USED IN LIEU OF OR IN COMBINATION WITH BOLLARDS AS SHOWN ON THIS DRAWING.

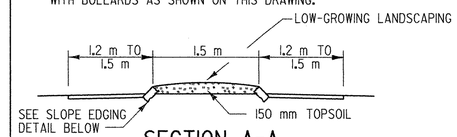

SECTION A-A

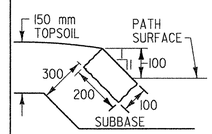

SLOPE EDGING DETAIL

NOTES:

1.) EDGING TO BE PLACED PRIOR TO PLACING TOP SURFACE COURSE.

2.) JOINTS BETWEEN STONES TO BE MORTARED PER VAOT STANDARD SPECIFICATIONS FOR CONSTRUCTION.

3.) CURB TO BE GRANITE OR NOMINAL SIZE PRESSURE TREATED LUMBER.

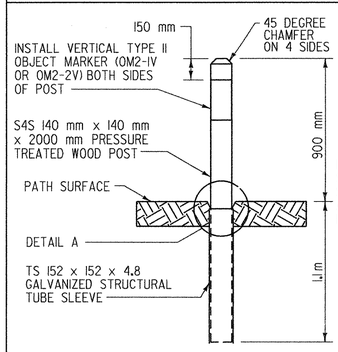

WOOD BOLLARD

NOTE:
CONTRACTOR SHALL ENSURE BOLLARDS ARE REMOVABLE ONCE PLACED WITHIN SLEEVE BY MILLING TIMBER AS NEEDED

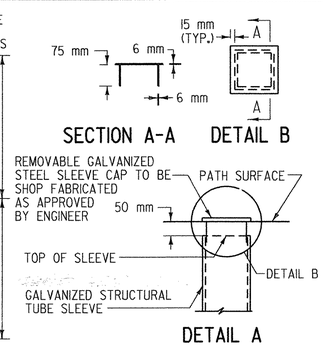

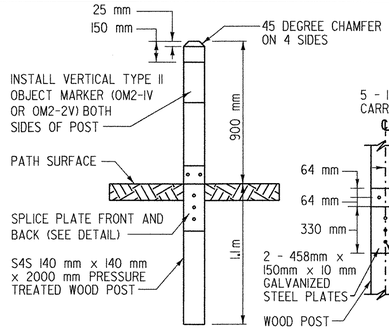

WOOD BOLLARD WITH SPLICE PLATE
(NOT RECOMMENDED WHERE SNOWMOBILE USE IS ANTICIPATED)

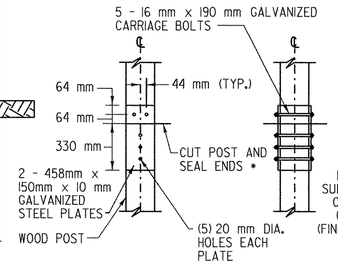

* CUT ENDS SHALL BE TREATED WITH COPPER NAPHTHENATE SOLUTION

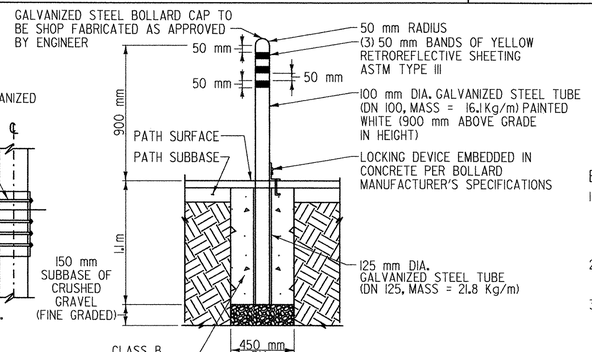

STEEL BOLLARD

BOLLARD NOTES:

1. BOLLARD DESIGNS SHOWN ARE INTENDED ONLY WHEN A REMOVABLE CENTER BOLLARD IS DEEMED NECESSARY TO PROVIDE MAINTENANCE OR EMERGENCY VEHICLE ACCESS OR TO FACILITATE SNOWMOBILE USE.

2. ALTERNATIVE REMOVABLE/COLLAPSIBLE BOLLARD DESIGNS MAY BE APPROVED BY THE ENGINEER.

3. REMOVABLE BOLLARD DESIGN MUST BE COORDINATED WITH APPROPRIATE STATE OR LOCAL MAINTENANCE ENTITY.

REMOVABLE BOLLARD OPTIONS

THIS SHEET IS NOT TO SCALE

OTHER STDS. A-78M, A79M, E-131BM, E-143M, E-153BM, E-194M, E-195M, E-198M REQ'D:

NOTE: ALL DIMENSIONS ARE IN MILLIMETERS (mm) EXCEPT WHERE NOTED.

REVISIONS AND CORRECTIONS

MAY 2, 2003 - DATE OF ORIGINAL ISSUE

APPROVED

DIRECTOR OF PROGRAM DEVELOPMENT

LOCAL TRANSPORTATION FACILITIES PROGRAM MANAGER

FEDERAL HIGHWAY ADMINISTRATION

SHARED USE PATH/HIGHWAY INTERSECTION DETAILS

VERMONT AGENCY OF TRANSPORTATION

VAOT Metric STANDARD A-8 OM