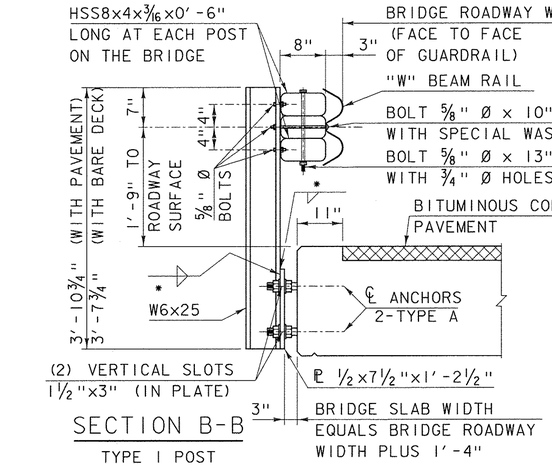

SECTION B-B

TYPE 1 POST

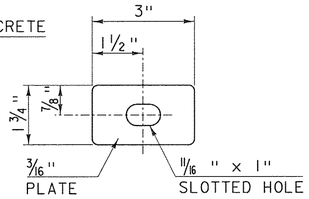

SPECIAL WASHER

PLACE WASHER BETWEEN BOLT HEAD AND FACE OF RAIL.

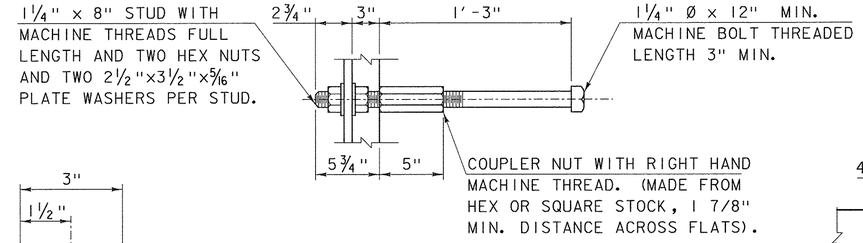

TYPE A ANCHOR DETAIL

DIMENSION ① IS 6" OR 8" DEPENDING ON BOX BEAM DEPTH. SEE PROJECT PLANS AND POST ANCHORAGE DETAILS. DIMENSION ② DETAILED BY FABRICATOR, SEE PROFILE AND CAMBER DETAILS. MINIMUM POST LENGTH IS 3'-6 1/2" AND MAXIMUM POST LENGTH IS 4'-1 1/4".

(FOR USE WITH PRESTRESSED CONCRETE BOX BEAMS)

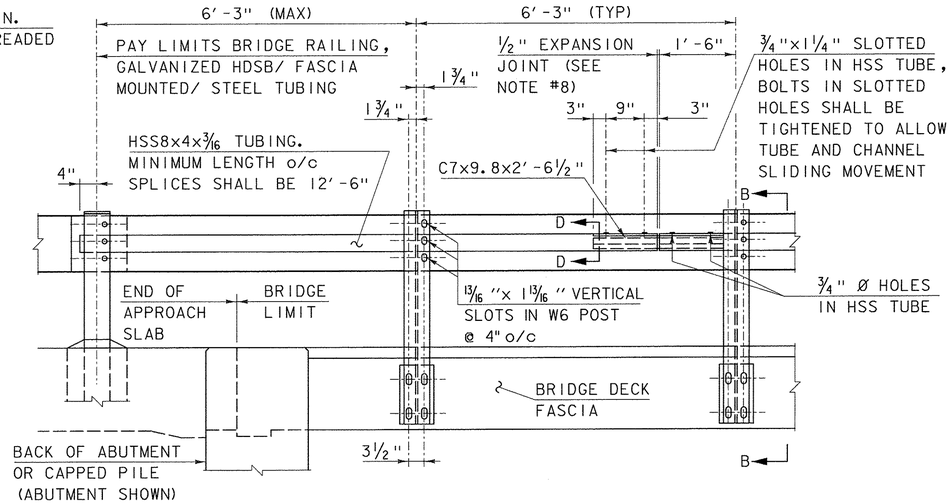

RAILING ELEVATION

(TYPE 1 POSTS SHOWN)

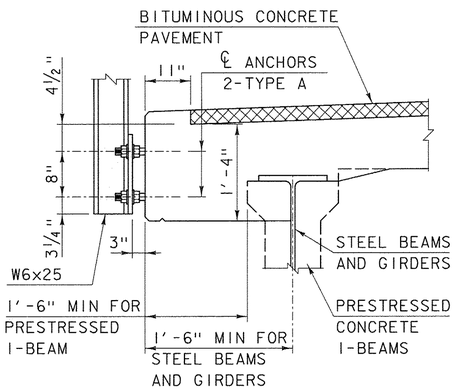

LONGITUDINAL BEAM BRIDGES

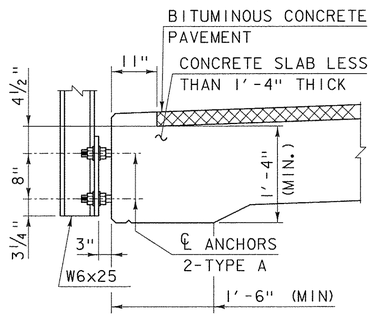

CONCRETE SLABS

(EDGE BEAM SHOWN)

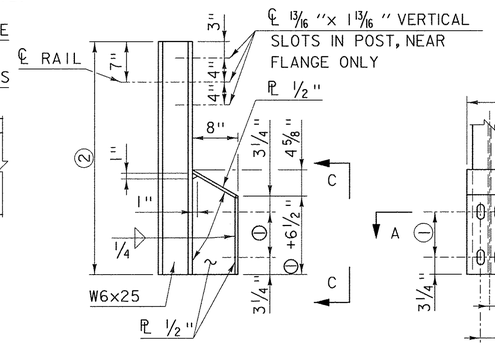

SECTION B-B

TYPE 2 POST

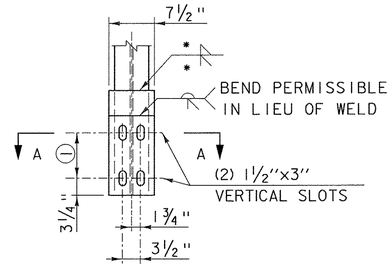

VIEW C-C

NOTES:

1. ALL WORK AND MATERIALS SHALL CONFORM TO SECTION 525.
2. TYPE B ANCHOR INSERTS OF A DIFFERENT TYPE MAY BE PROVIDED, IF APPROVED BY THE ENGINEER.
3. PRIOR TO GALVANIZING THE ASSEMBLED POST, GRIND ALL EDGES TO A MINIMUM RADIUS OF 1/16".
4. ALL POSTS SHALL BE SET NORMAL TO GRADE.
5. SPLICES FOR THE STEEL BEAM GUARDRAIL SHALL LAP IN THE DIRECTION OF TRAFFIC.
6. A RAILING JOINT SPLICE SHALL BE PROVIDED IN ANY RAIL BAY SPANNING THE END OF AN INTEGRAL ABUTMENT BRIDGE AND AT ALL SUPERSTRUCTURE EXPANSION JOINTS.
7. SEE STANDARD DRAWING G-1 FOR DETAILS OF DELINEATORS. A DELINEATOR SHALL BE INSTALLED AT 30 FOOT SPACING OR THE NEAREST POST. WHITE IS TO BE INSTALLED ON THE DRIVER'S RIGHT. FOR ONE WAY BRIDGES, YELLOW IS TO BE INSTALLED ON THE DRIVER'S LEFT.
8. THE 1/2" EXPANSION JOINT SHOWN IN THE RAILING ELEVATION IS DESIGNED FOR BRIDGE LENGTHS UP TO 80 FEET, ANY LONGER SPANS WILL HAVE TO BE MODIFIED TO ACCOUNT FOR THEIR MOVEMENT.
9. FOR RADII LESS THAN 950 FEET, HSS8x4 TUBES SHALL BE SHOP BENT TO FIT THE APPLICABLE CURVE.
10. THE MINIMUM DISTANCE FROM THE LAST POST TO THE END OF SLAB IS 1'-6".
11. FERRULES SHALL BE 12L14 COLD DRAWN CARBON STEEL.
12. HOLES IN RAIL FOR RAIL TUBE ATTACHMENT MAY BE FIELD DRILLED. HOLES SHALL BE COATED WITH AN APPROVED ZINC-RICH PAINT PRIOR TO INSTALLATION.
13. THIS RAILING MEETS THE REQUIREMENTS FOR A TL-2 SERVICE LEVEL.

POST ANCHORAGE DETAILS

(NOT FOR USE WITH PRESTRESSED BOX BEAMS)

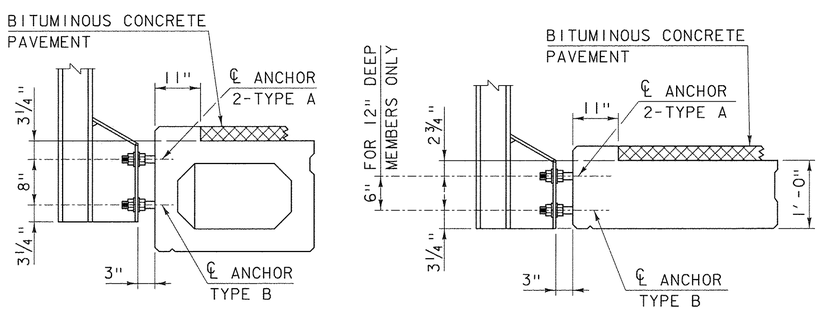

POST ANCHORAGE DETAILS (PRECAST CONCRETE)

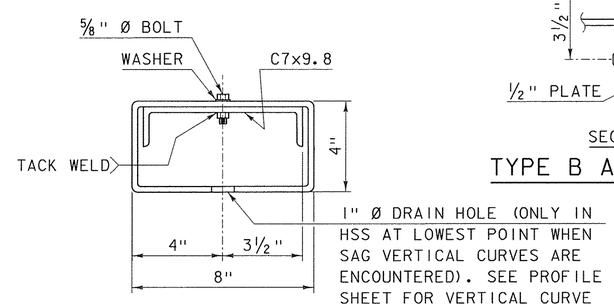

SECTION D-D

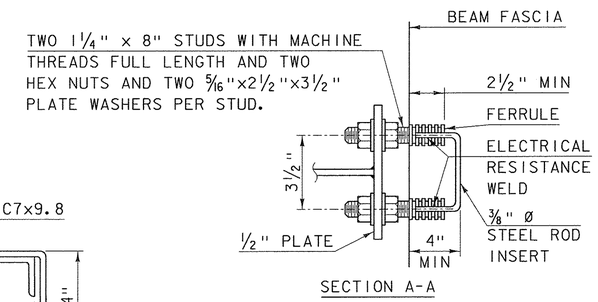

TYPE B ANCHOR DETAIL

OTHER STDS. REQUIRED: G-1

REVISIONS AND CORRECTIONS

MAY 24, 2012 - ORIGINAL APPROVAL

APPROVED

Wm. Michael Hedges
STRUCTURES ENGINEER

6/5/12
DIRECTOR OF PROGRAM DEVELOPMENT

Mark D. Richter 6-11-2012
FEDERAL HIGHWAY ADMINISTRATION

BRIDGE RAILING, GALVANIZED HDSB/FASCIA MOUNTED/ STEEL TUBING

VERMONT AGENCY OF TRANSPORTATION

STANDARD

S-367A