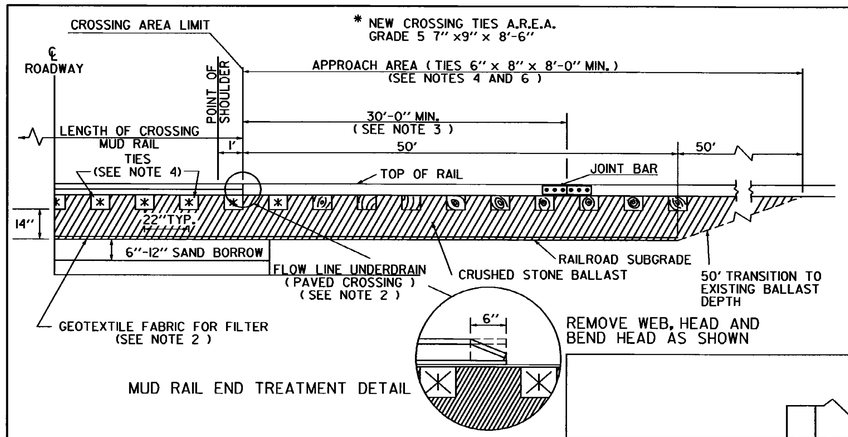

MUD RAIL END TREATMENT DETAIL

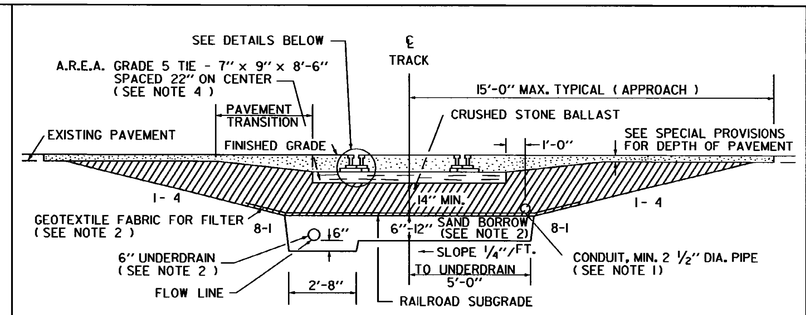

TYPICAL FOR RAILROAD CROSSING-PAVED HIGHWAY

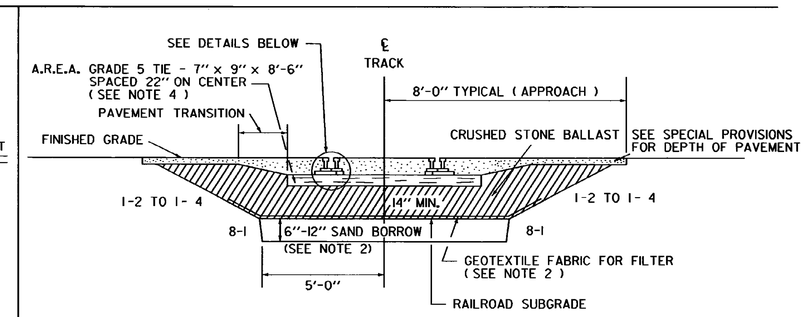

TYPICAL FOR RAILROAD CROSSING-GRAVEL HIGHWAY

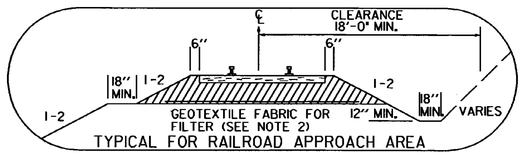

PROFILE OF RAILROAD CROSSING ALONG TRACKS

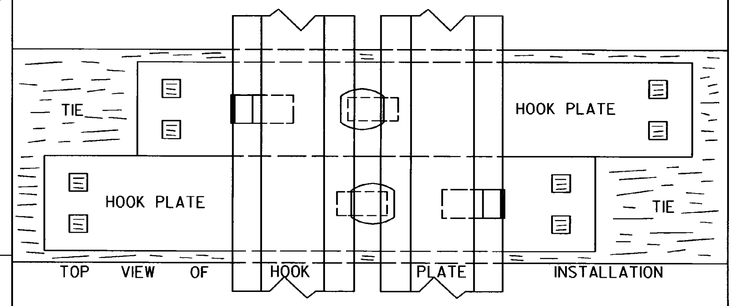

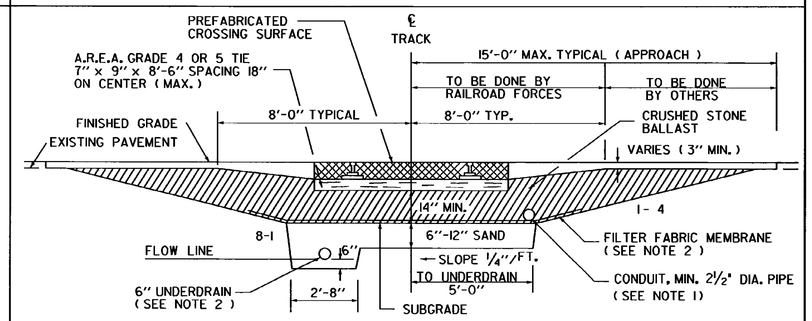

PREFABRICATED RAIL HIGHWAY CROSSING

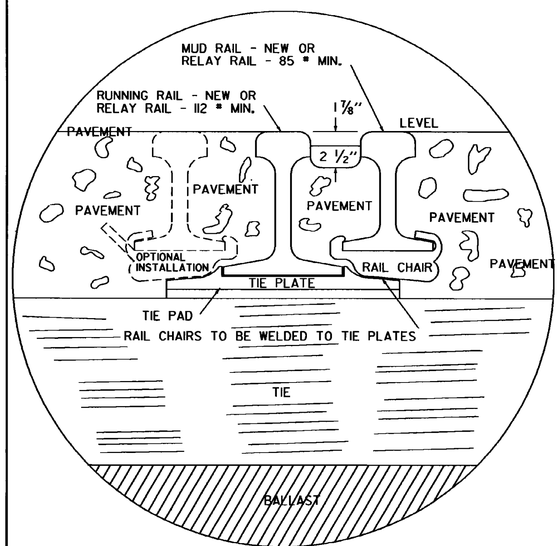

RAIL CHAIR DETAIL

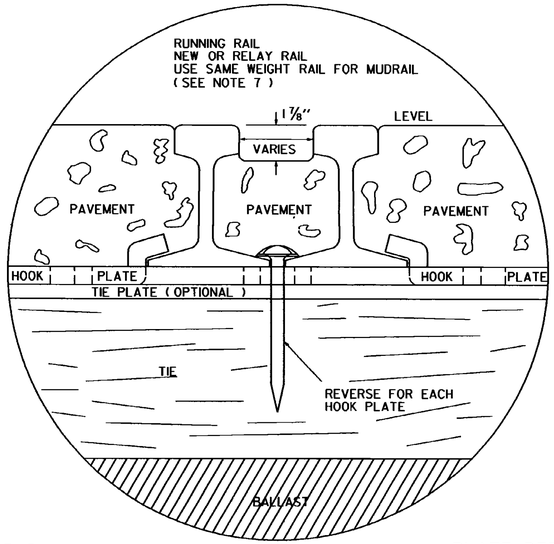

DOUBLE HOOK PLATE DETAIL

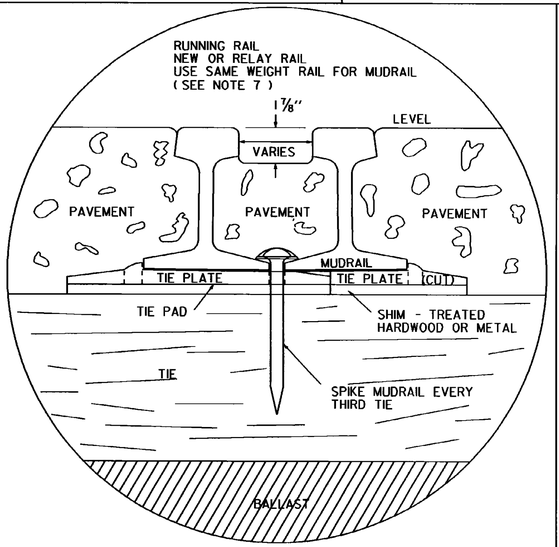

CUT TIE PLATE DETAIL

GENERAL NOTES

1. SIGNAL CONDUIT TO BE INSTALLED IN LOCATIONS DIRECTED BY THE ENGINER. PAYMENT FOR ITEM TO BE INCLUDED IN CROSSING LINAR FOOT COST.
2. THE USE OF UNDERDRAIN, SAND BORROW AND GEOTEXTILE FABRIC SHALL BE DETERMINED UPON INSPECTION OF FIELD CONDITIONS BY THE RAILROAD AND THE ENGINEER.
3. ALL RAIL JOINTS, INCLUDING MUDRAIL JOINTS, WITHIN THE CROSSING AREA AND 30'-0" BEYOND WILL BE CROPPED AND THERMITE WELDED IN ACCORDANCE WITH THE LATEST REVISION OF A.R.E.A. SPECIFICATIONS.
4. NEW TIES SHALL BE USED IN CROSSING AREA AS SHOWN. TIES IN APPROACH AREAS TO BE REPLACED AS RECOMMENDED BY THE RAILROAD AND APPROVED BY THE ENGINEER.
5. TIE PLATES SHALL BE NEW OR RELAY PLATES MANUFACTURED FOR THE RAIL USED. PLATES SHALL BE INSPECTED AND APPROVED BY THE RAILROAD AND THE ENGINEER.
6. BALLAST IN APPROACH AREAS SHALL EXTEND 6" BEYOND END OF TIES AND SLOPED 1:2 TO THE ROADBED. (SEE DETAIL)
7. RAIL WEIGHTS SHALL BE DETERMINED BY THE RAILROAD AND APPROVED BY THE ENGINEER.
8. TYPE AND DESIGN OF PREFABRICATED SURFACE SHALL RECEIVE APPROVAL OF THE STATE.
9. MANUFACTURERS SPECIFICATIONS SHALL BE FOLLOWED WHERE PRE-FABRICATED CROSSING SURFACES ARE TO BE INSTALLED.
10. MODIFICATIONS TO RAILROAD APPROACH AREAS MAY BE NECESSARY AS LOCAL CONDITIONS WARRANT.
11. CONTINUOUS WELDED RAIL THROUGH CROSSING TO A MINIMUM OF 30 FEET EACH SIDE OF CROSSING SHOULDER.
12. WELDED JOINTS WILL BE GROUND TO CONFORM TO THE SHAPE OF THE RAIL ON GAUGE AND FIELD SIDES.

REVISIONS AND CORRECTIONS

NOV. 25, 1980 -ORIGINAL APPROVAL DATE
MAR. 12, 1987 - SHEET UPDATED
JUNE 1, 1994 - REISSUED, WITHOUT CHANGE, UNDER NEW SIGNATURE.

APPROVED

APPROVED FOR THIS PROJECT AND/OR DESIGN IMPLEMENTATION. FHWA FINAL APPROVAL PENDING.

DIRECTOR OF RAIL, AIR AND PUBLIC TRANSIT

RAIL - HIGHWAY CROSSING STANDARDS
PAVED CROSSING FOR GRAVEL OR PAVED HIGHWAYS

VERMONT AGENCY OF TRANSPORTATION

STANDARD
RR-1