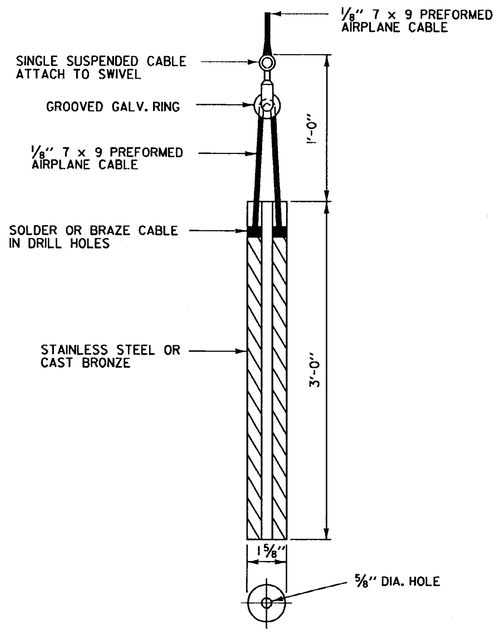


TAMPING HAMMER
( FOR INSTALLATION )

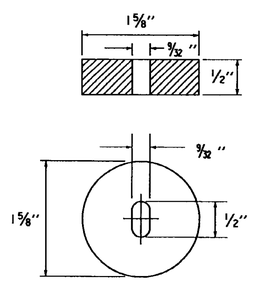


SPECIAL DISK TO BE SUPPLIED WITH TAMPING HAMMER WHICH CAN BE FIRMLY ATTACHED TO BOTTOM.

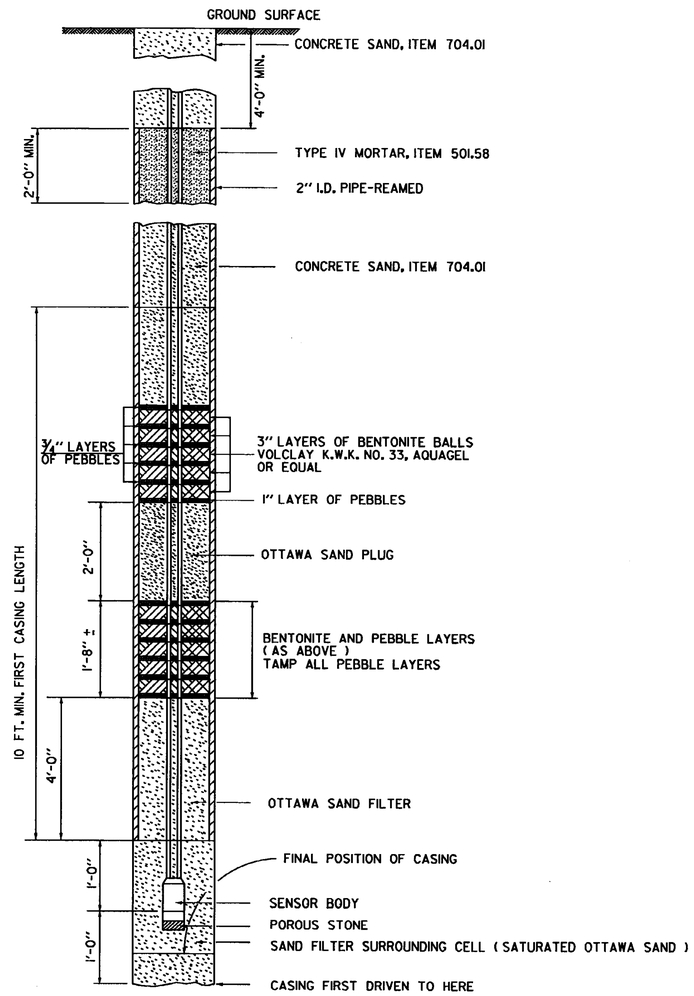


PIEZOMETER DETAILS

GAUGE PROTECTION BOX TO BE PROVIDED WITH SUITABLE HINGED COVER AND LOCK FOR PROTECTION OF INSTRUMENTS. EACH TUBE MUST BE PROPERLY LABELED WITH ELEVATION AND LOCATION OF PIEZOMETER. BOX SHALL BE PROPERLY MARKED AND PROTECTED TO AVOID DAMAGE FROM CONSTRUCTION EQUIPMENT.

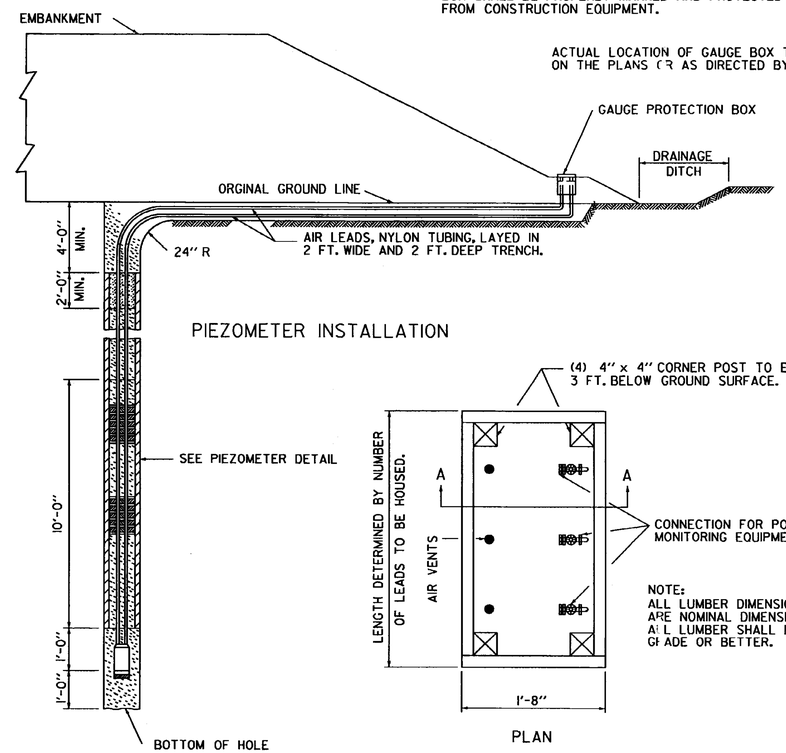


PIEZOMETER INSTALLATION

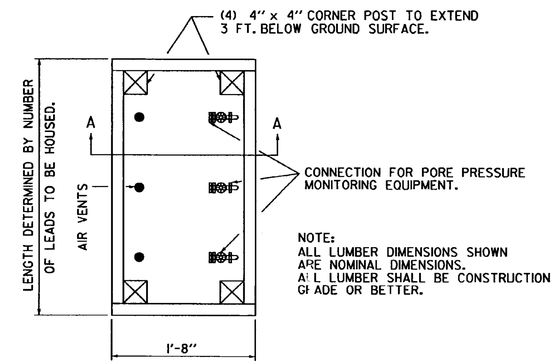


NOTE:
ALL LUMBER DIMENSIONS SHOWN ARE NOMINAL DIMENSIONS.
ALL LUMBER SHALL BE CONSTRUCTION GRADE OR BETTER.

PLAN

NOTE: IF GAUGE PROTECTION BOX IS TO BE ABOVE GROUND, ROLL ROOFING SHOULD BE USED TO WEATHERPROOF THE SIDE WALLS.

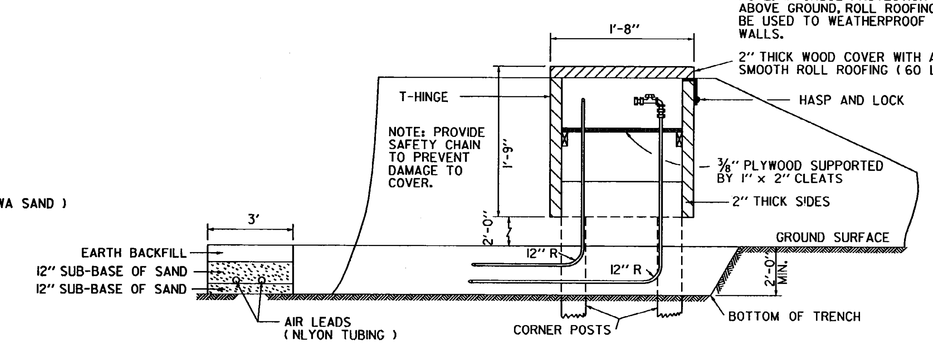


GAUGE PROTECTION BOX DETAILS ( SECTION A-A )

REVISIONS AND CORRECTIONS

JAN. 18, 1972 - ORIGINAL APPROVAL DATE
MAR. 9, 1995 - MINOR DETAIL AND NOTE CHANGES

APPROVED APPROVED FOR THIS PROJECT AND/OR DESIGN IMPLEMENTATION. FHWA FINAL APPROVAL PENDING.

DIRECTOR OF CONSTRUCTION AND MAINTENANCE

MATERIALS AND RESEARCH ENGINEER

# PIEZOMETER TYPE III ( AIR ACTUATED )

VERMONT AGENCY OF TRANSPORTATION

STANDARD

L-3