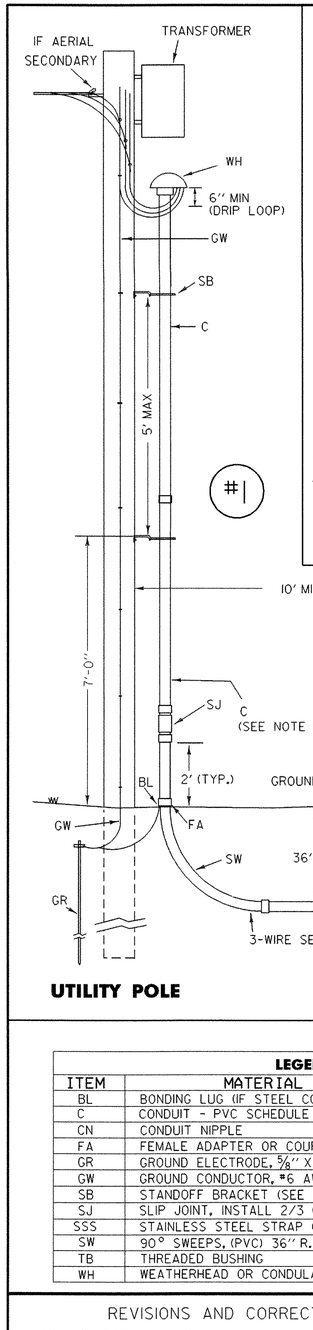

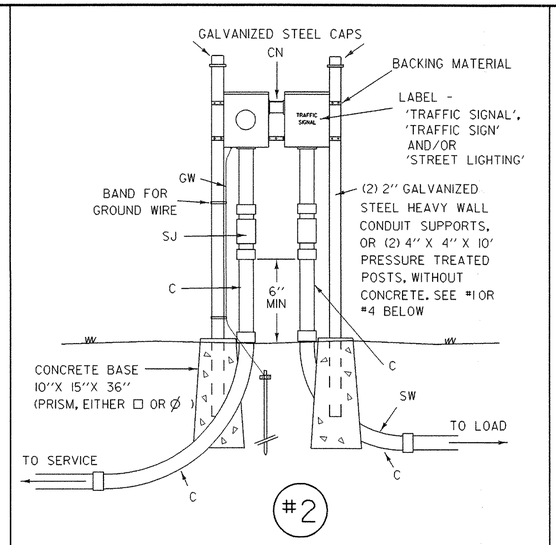

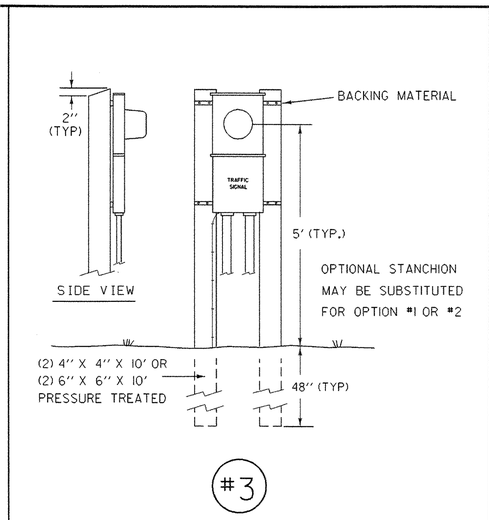

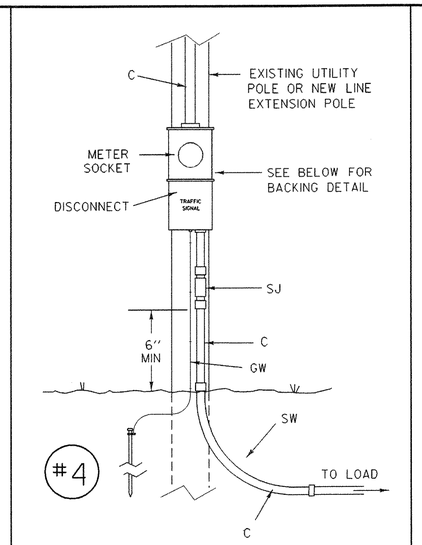

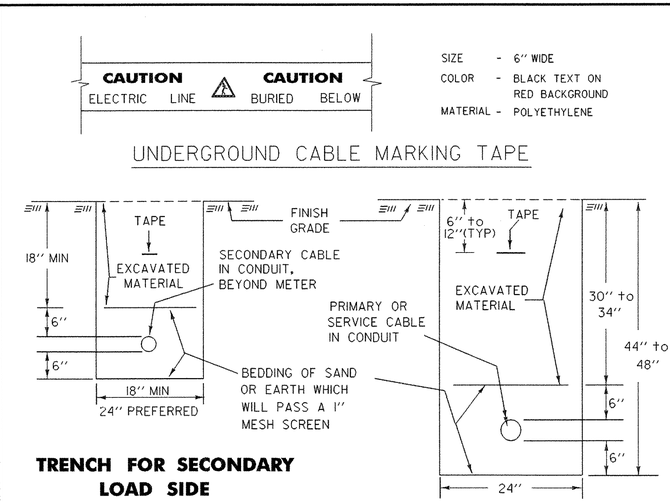

TRENCH FOR SECONDARY LOAD SIDE

TRENCH FOR PRIMARY OR SERVICE SIDE

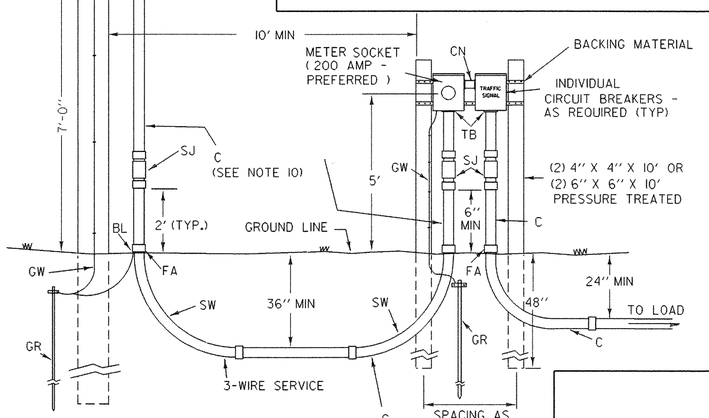

UTILITY POLE

STANCHION

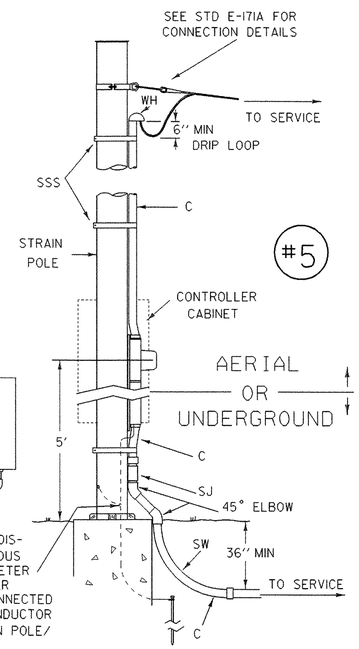

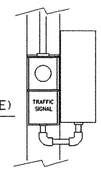

THE POWER SERVICE METER AND DISCONNECT SHALL HAVE A CONTINUOUS GROUND CONDUCTOR FROM THE METER TO THE GROUND ELECTRODE. OTHER GROUND CONDUCTORS MAY BE CONNECTED TO THIS CONTINUOUS GROUND CONDUCTOR WITH SPLIT NUTS. SEE THE STRAIN POLE/ FOOTING DETAIL SHEET.

DIRECT SERVICE TO STRAIN POLE

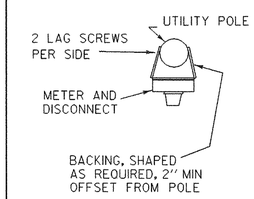

BACKING FOR OPTION #4

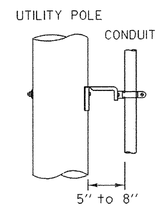

STANDOFF BRACKET

USUALLY FURNISHED BY THE UTILITY COMPANY

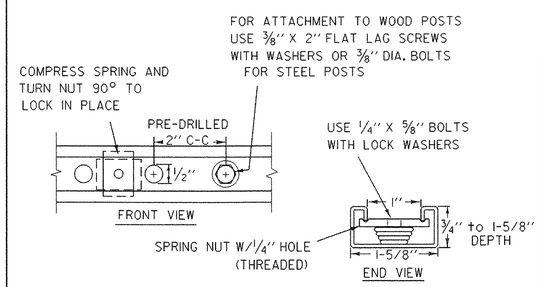

BACKING MATERIAL DETAIL

ALL MATERIAL & HARDWARE TO BE GALVANIZED

NOTES

THE CONTRACTOR SHALL CONTACT THE LOCAL UTILITY COMPANY AND ADHERE TO ANY EQUIPMENT, PROCEDURE AND CRITERIA VARIATIONS WHICH PERTAIN. SEE SPECIAL PROVISIONS FOR THE UTILITY CONTACT. THE CONTRACTOR SHALL PROVIDE TO THE ENGINEER ALL SPECIFIC INFORMATION CONCERNING UTILITY REQUIREMENTS PRIOR TO THE PRECONSTRUCTION MEETING OR THE START OF WORK, WHICHEVER IS FIRST.

1. ALL CONSTRUCTION MUST COMPLY WITH THE NATIONAL ELECTRICAL CODE AND UTILITY COMPANY REQUIREMENTS.
2. STANCHIONS MUST BE PLACED OUTSIDE THE CLEAR ZONE OR THEY MUST BE PROTECTED BY GUARDRAIL. THE LOCATION OF STANCHIONS MUST BE APPROVED BY THE UTILITY COMPANY PRIOR TO CONSTRUCTION.
3. THE CONTRACTOR IS RESPONSIBLE FOR PROVIDING ALL MATERIALS, EXCEPT FOR STANDOFF BRACKETS WHICH ARE USUALLY FURNISHED AND INSTALLED BY THE UTILITY COMPANY. THE CONTRACTOR IS RESPONSIBLE FOR INSTALLING ALL MATERIALS, EXCEPT THOSE ATTACHED TO THE UTILITY POLE. ALL MATERIAL AND INSTALLATION COSTS FOR THE POWER SERVICE, EXCEPT FOR THE WIRED CONDUIT, SHALL BE CONSIDERED PART OF THE TRAFFIC SIGNAL, STREET LIGHTING OR SIGN ITEM, WHICHEVER IS APPLICABLE.
4. ALL EXPOSED METAL EQUIPMENT MUST BE GROUNDED.
5. ATTACH CONDUIT ON THE SIDE OF THE POLE OR STANCHION AWAY FROM TRAFFIC. CONTACT THE LOCAL UTILITY COMPANY FOR FINAL PLACEMENT.
6. MATERIALS AND DIMENSIONS APPLY TO ALL STANCHIONS.
7. IN RURAL AREAS, WITH THE PERMISSION OF THE UTILITY COMPANY, THE METER AND THE DISCONNECT MAY BE INSTALLED ON AN EXISTING UTILITY POLE. SEE OPTION #4.
8. OPTION #1, #2, #3 OR #5 MAY BE USED IN URBAN AREAS, EITHER RESIDENTIAL OR COMMERCIAL, OR AS DETERMINED BY THE UTILITY AND APPROVED BY THE ENGINEER.
9. THE METER AND DISCONNECT SHALL BE ATTACHED THE STANCHION/POLE WITH TWO LENGTHS OF GALVANIZED BACKING MATERIAL.
10. SERVICE CONDUIT SHALL BE MINIMUM 2 INCH. SMALLER CONDUIT MAY BE ALLOWED WITH PRIOR APPROVAL FROM THE UTILITY AND THE ENGINEER AND AFTER CONSULTATION WITH THE HIGHWAY, SAFETY & DESIGN DIVISION.
11. WHEN MORE THAN ONE GROUND ELECTRODE IS REQUIRED, THEY SHALL BE A MINIMUM OF 6' APART.
12. METERS MAY NOT BE REQUIRED BY ALL UTILITY COMPANIES.

LEGEND

ITEM	MATERIAL
BL	BONDING LUG (IF STEEL CONDUIT)
C	CONDUIT - PVC SCHEDULE 80 (2" MIN.)
CN	CONDUIT NIPPLE
FA	FEMALE ADAPTER OR COUPLINGS AS REQUIRED
GR	GROUND ELECTRODE, 5/8" X 8' (MIN) COPPER CLAD (2 REQ.)
GW	GROUND CONDUCTOR, #6 AWG CU (MIN)
SB	STANDOFF BRACKET (SEE DETAIL)
SJ	SLIP JOINT, INSTALL 2/3 OPEN
SSS	STAINLESS STEEL STRAP (1" MIN)
SW	90° SWEEPS, (PVC) 36" R. - SERVICE, 24" R. - LOAD
TB	THREADED BUSHING
WH	WEATHERHEAD OR CONDULATOR

OTHER STDS. REQUIRED E - 171A (WHEN OPTION #5 IS USED)

SEE PLANS FOR OPTION #

REVISIONS AND CORRECTIONS

NOV. 17, 1993 - ORIGINAL APPROVAL DATE

JUN. 08, 2009 - NEC UPDATES FOR PVC CONDUIT

APPROVED

Kevin S. Marshia
HIGHWAY, SAFETY & DESIGN ENGINEER

Richard Fehrault
DIRECTOR OF PROGRAM DEVELOPMENT

Mark D. Richter
FEDERAL HIGHWAY ADMINISTRATION

POWER DROP STANCHIONS

/traf/std/stdel75.dgn - stdel75.1

VERMONT AGENCY OF TRANSPORTATION

STANDARD

E-175