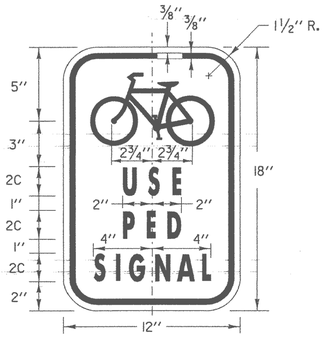

R9–5

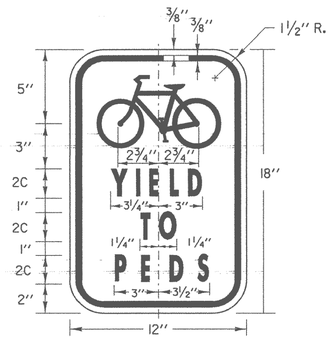

R9–6

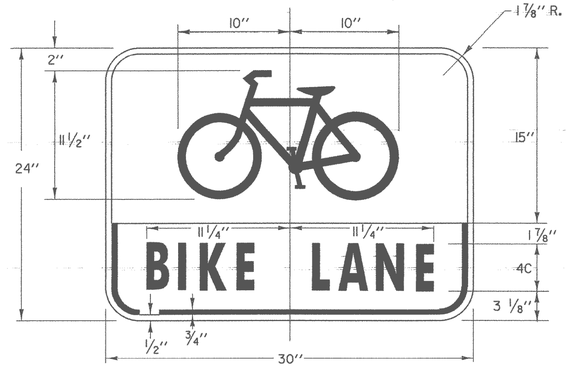

R3–17

COLORS:
BOTTOM HALF: LEGEND - BLACK
BACKGROUND - WHITE (RETROREFLECTIVE)
TOP HALF: SYMBOL - WHITE (RETROREFLECTIVE)
BACKGROUND - BLACK

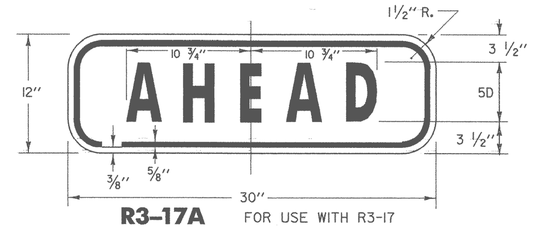

R3–17A FOR USE WITH R3-17

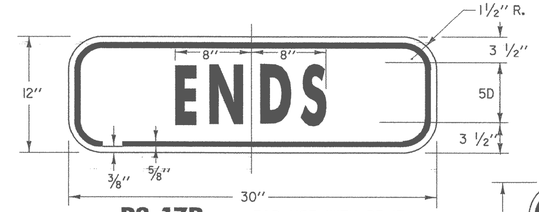

R3–17B FOR USE WITH R3-17

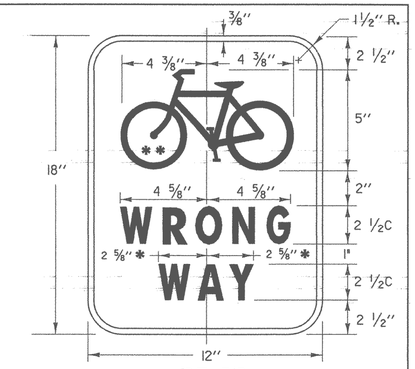

R5–1B

COLORS: BACKGROUND - RED
LEGEND AND SYMBOL - WHITE
* REDUCE SPACING TO FIT
** SEE FHWA STANDARD HIGHWAY SIGN BOOK FOR BIKE DETAILS

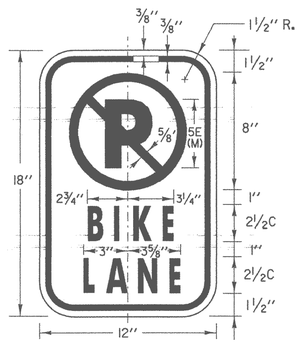

R7–9A

COLORS: LEGEND, CIRCLE, DIAGONAL - RED
BACKGROUND - WHITE
LETTER P, BORDER - BLACK

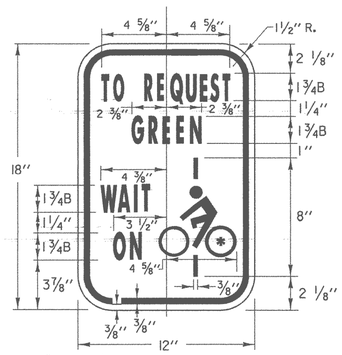

R10–22**

* SEE VAOT STADARD DRAWING E-194 FOR DESIGN OF BICYCLE SYMBOL
** FOR USE WITH BICYCLE DETECTOR PAVEMENT MARKING

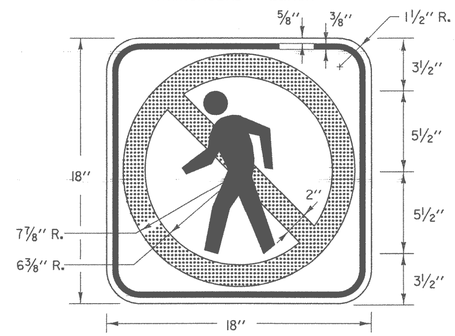

R9–3A

COLORS:CIRCLE AND DIAGONAL-RED
SYMBOL AND BORDER - BLACK
BACKGROUND - WHITE

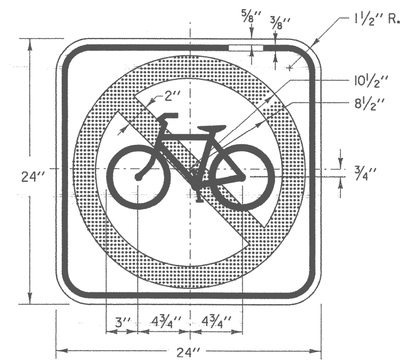

R5–6

COLORS:CIRCLE AND DIAGONAL-RED
SYMBOL AND BORDER - BLACK
BACKGROUND - WHITE

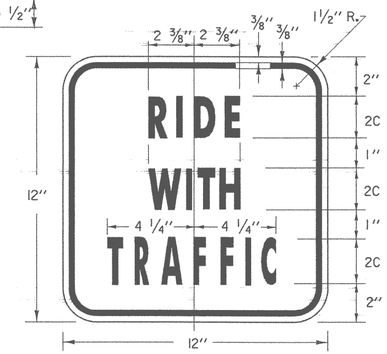

R9–3C

FOR USE WITH R5-1B

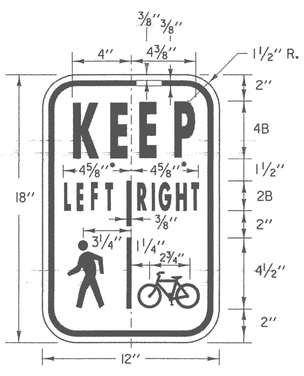

R9–7

* REDUCE LETTER SPACING 20%

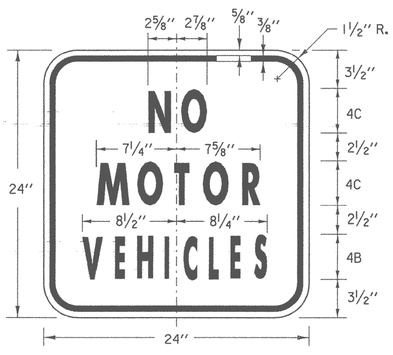

R5–3

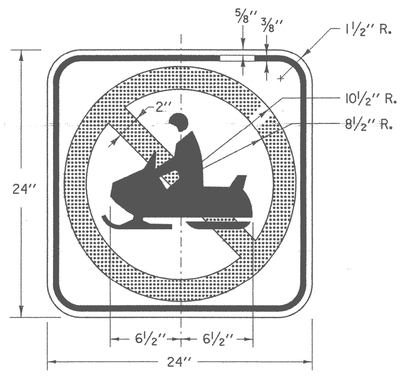

VR–565

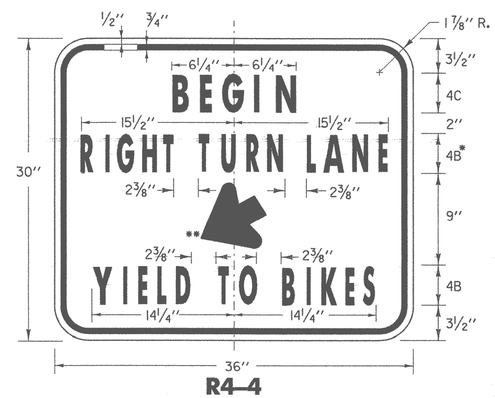

R4–4

* REDUCE LETTER SPACING 20%
** OPTICALLY CENTER ARROW ON VERTICAL CENTERLINE

GENERAL

SEE STANDARD E-144 FOR ARROWHEAD DETAILS. SEE STANDARD E-152 FOR PEDESTRIAN DETAIL. SEE STANDARD E-153 FOR SNOWMOBILE DETAIL. SEE FHWA STANDARD HIGHWAY SIGN BOOK FOR BIKE DETAILS.

COLORS

THE REGULATORY SIGNS SHOWN ON THIS SHEET SHALL HAVE A REFLECTORIZED WHITE BACKGROUND WITH BLACK TEXT AND BORDER UNLESS OTHERWISE NOTED. THE COLORS SHALL CONFORM WITH THE COLORS ADOPTED BY AASHTO AND APPROVED BY THE FHWA.

MATERIALS

THE SIGN BASE MATERIALS USED FOR REGULATORY SIGNS SHOWN ON THIS SHEET MAY BE ANY OF THE FOLLOWING MINIMUM THICKNESSES NOTED:

	12" × 18" 18" × 18"	24" × 24" 24" × 30"	36" × 30"
FLAT SHEET ALUMINUM	0.060"	0.080"	0.100"

THE REFLECTIVE MATERIAL SHALL BE ASTM TYPE III WHITE REFLECTIVE SHEETING APPLIED TO THE ENTIRE BACKGROUND OF THE SIGN. THE BLACK, RED OR GREEN PORTIONS OF THE SIGNS MAY BE LETTERING FILM OR SILK SCREENED.

SPECIFICATIONS

REGULATORY SIGNS SHALL MEET THE VERMONT STANDARD SPECIFICATIONS FOR TRAFFIC SIGNS AS DESCRIBED IN THE VAOT STANDARD SPECIFICATIONS FOR CONSTRUCTION.

TEXT DESIGN

LETTERS, DIGITS, ARROWS, SPACING AND TEXT DIMENSIONS SHALL CONFORM TO THE LATEST VERSION OF FHWA'S "STANDARD ALPHABETS FOR HIGHWAY SIGNS AND PAVEMENT MARKINGS". DETAILS SHALL CONFORM WITH THOSE DESCRIBED IN THE PUBLICATION "STANDARD HIGHWAY SIGNS" AS SPECIFIED IN THE MUTCD.

OTHER STDS. REQUIRED: E-144, E-152, E-153, E-194

REVISIONS AND CORRECTIONS

DECEMBER 30, 2002 - DATE OF ORIGINAL ISSUE
OCTOBER 1, 2003 - MINOR DRAFTING CHANGES
MARCH 15, 2005 - REVISED SIGN DETAILS

APPROVED

DIRECTOR OF PROGRAM DEVELOPMENT

TRAFFIC OPERATIONS ENGINEER

FEDERAL HIGHWAY ADMINISTRATION

REGULATORY SIGN DETAILS

VERMONT AGENCY OF TRANSPORTATION

STANDARD
E-143B