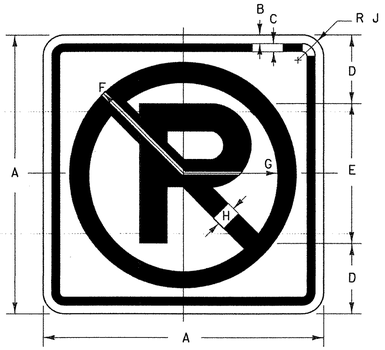

R8-3A

COLORS:
CIRCLE AND DIAGONAL - RED (RETROREFL)
SYMBOL AND BORDER - BLACK (NON - REFL)
BACKGROUND - WHITE (RETROREFL)

SIGN	DIMENSIONS (INCHES)								
	A	B	C	D	E	F	G	H	J
URBAN MIN. AND STD.	12	3/8	3/8	3	6E(M)	4 7/8	3 7/8	1	1 1/2
RURAL MIN. AND STD.	24	3/8	5/8	6	12E(M)	10 1/2	8 1/2	2	1 1/2
EXPWY.	36	5/8	7/8	9	18E(M)	15 3/4	12 3/4	3	2 1/4
FWY.	48	3/4	1 1/4	12	24E(M)	21	17	4	3

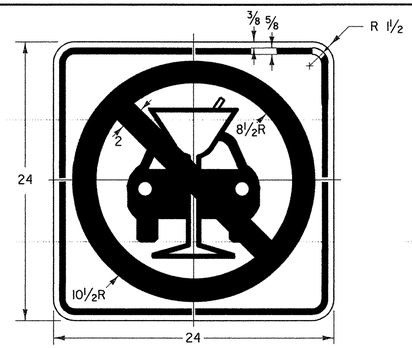

VR-654

COLORS:
CIRCLE AND DIAGONAL - RED (RETROREFL)
SYMBOL AND BORDER - BLACK (NON - REFL)
BACKGROUND - WHITE (RETROREFL)

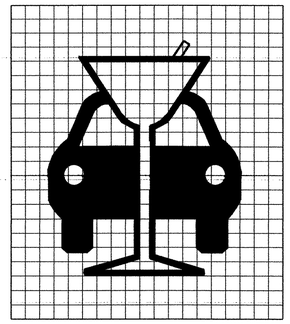

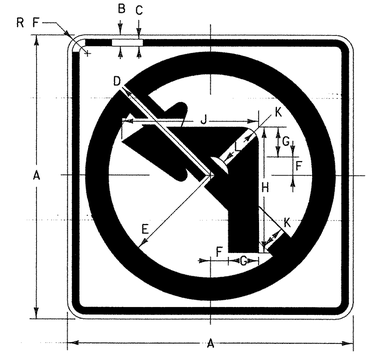

R3-2

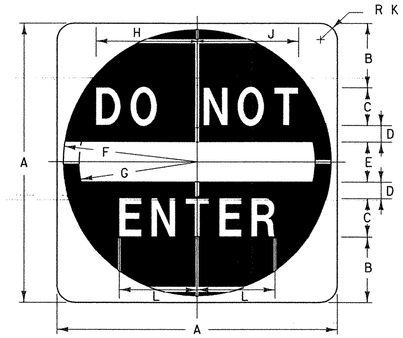

R5-1

COLORS:
SYMBOL - RED (RETROREFL)
LEGEND AND BACKGROUND - WHITE (RETROREFL)

SIGN	DIMENSIONS (INCHES)										
	A	B	C	D	E	F	G	H	J	K	L
MIN. AND STD.	30	6 1/2	4D	2	5	14 1/2	12 1/2	9 3/4	10	1 7/8	7 7/8
EXPWY.	36	7 1/2	5D	2 1/2	6	17 1/2	15	12	12 3/8	2 1/4	9 13/16
SPECIAL	48	11	6D	3	8	23 1/2	20	14 1/2	15	3	11 3/4

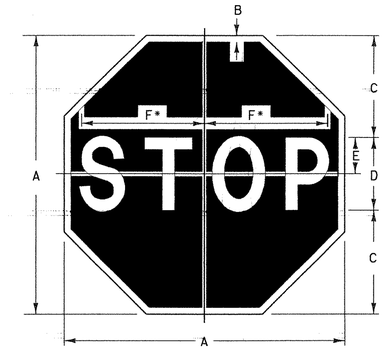

R1-1

* REDUCE SPACING 40 %

COLORS:
LEGEND - WHITE (RETROREFL)
BACKGROUND - RED (RETROREFL)

SIGN	DIMENSIONS (INCHES)					
	A	B	C	D	E	F
PATH	18	3/8	6	6C	3	7 3/4
MIN.	24	5/8	8	8C	4	10
STD.	30	3/4	10	10C	5	12 1/2
EXPWY.	36	7/8	12	12C	6	15
SPECIAL	48	1 1/4	16	16C	8	20

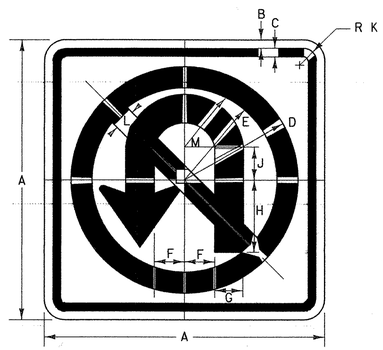

R3-4

SEE STANDARD E-151 FOR ARROW DETAIL

COLORS:
CIRCLE AND DIAGONAL - RED (RETROREFL)
ARROW AND BORDER - BLACK (NON - REFL)
BACKGROUND - WHITE (RETROREFL)

SIGN	DIMENSIONS (INCHES)											
	A	B	C	D	E	F	G	H	J	K	L	M
MIN. AND STD.	24	3/8	5/8	10 1/2	8 1/2	2 1/2	2 1/2	6	2 1/4	1 1/2	2	5
SPECIAL	30	1/2	3/4	13 1/8	10 5/8	3 1/8	3 1/8	7 1/2	2 13/16	1 7/8	2 1/2	6 1/4
EXPWY.	36	5/8	7/8	15 3/4	12 3/4	3 3/4	3 3/4	9	3 3/8	2 1/4	3	7 1/2
SPECIAL	48	3/4	1 1/4	21	17	5	5	12	4 1/2	3	4	10

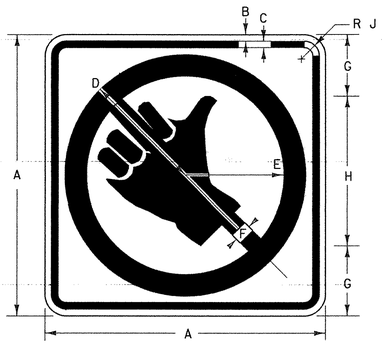

R9-4A

COLORS:
CIRCLE AND DIAGONAL - RED (RETROREFL)
SYMBOL AND BORDER - BLACK (NON - REFL)
BACKGROUND - WHITE (RETROREFL)

SIGN	DIMENSIONS (INCHES)								
	A	B	C	D	E	F	G	H	J
MIN.	18	3/8	5/8	7 7/8	6 3/8	1 1/2	3 3/4	10 1/2	1 1/2
STD.	24	3/8	5/8	10 1/2	8 1/2	2	5	14	1 1/2

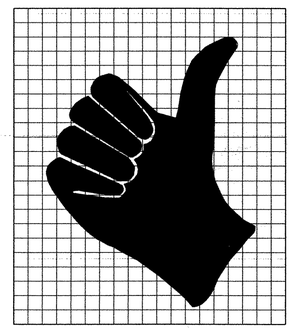

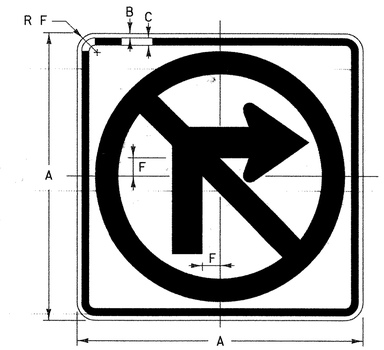

R3-1

NOTE
SEE STANDARD E-151 FOR ARROW DETAIL
USE SAME ARROW DETAIL FOR R3-1 AND R3-2

COLORS:
CIRCLE AND DIAGONAL - RED (RETROREFL)
ARROW AND BORDER - BLACK (NON - REFL)
BACKGROUND - WHITE (RETROREFL)

SIGN	DIMENSIONS (INCHES)										
	A	B	C	D	E	F	G	H	J	K	L
MIN. AND STD.	24	3/8	5/8	10 1/2	8 1/2	1 1/2	2 1/2	10 1/2	11 1/2	2	1/2
SPECIAL	30	1/2	3/4	13 1/8	10 5/8	1 7/8	3 1/8	13 1/8	14 1/2	2 1/2	5/8
EXPWY.	36	5/8	7/8	15 3/4	12 3/4	2 1/4	3 3/4	15 3/4	17 1/4	3	3/4
SPECIAL	48	3/4	1 1/4	21	17	3	5	21	23	4	1

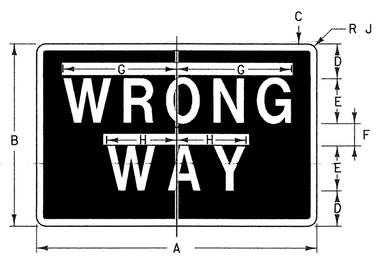

R5-1A

COLORS:
LEGEND - WHITE (RETROREFL)
BACKGROUND - RED (RETROREFL)

SIGN	DIMENSIONS (INCHES)								
	A	B	C	D	E	F	G	H	J
STD.	36	24	3/4	4 1/2	6D	3	13 5/16	8 1/16	1 1/2
SPECIAL	42	30	7/8	5	8D	4	17 3/4	10 3/4	1 7/8

(ALL DIMENSIONS SHOWN IN INCHES EXCEPT WHERE NOTED)

NOTES

DESIGN

LETTERS, DIGITS, ARROWS, SPACING AND TEXT DIMENSIONS SHALL CONFORM WITH THE "STANDARD HIGHWAY SIGNS BOOK" AND DESIGNS PRESCRIBED IN THE MANUAL ON UNIFORM TRAFFIC CONTROL DEVICES (MUTCD) ADOPTED BY THE U.S. DEPARTMENT OF TRANSPORTATION, FEDERAL HIGHWAY ADMINISTRATION (FHWA). SEE STANDARD E-144 FOR ARROWHEAD DETAILS.

MATERIALS

THE SIGN BASE MATERIALS USED FOR REGULATORY SIGNS SHOWN ON THIS SHEET MAY BE ANY OF THE FOLLOWING OF THE MINIMUM THICKNESS NOTED.

	12" X 12" 18" X 18"	24" X 24" 30" X 18" 30" X 30"	36" X 24" 36" X 36" 42" X 30"	48"X48"
FLAT SHEET ALUMINUM	0.060"	0.080"	0.100"	0.125"

REFLECTORIZATION

THE BACKGROUND RETROREFLECTIVE MATERIAL SHALL BE ASTM TYPE III OR TYPE VIII RETROREFLECTIVE SHEETING APPLIED TO THE ENTIRE BACKGROUND OF THE SIGN. THE BLACK PORTIONS OF SIGNS MAY BE LETTERING FILM OR SILK SCREENED.

COLORS

THE REGULATORY SIGNS SHOWN ON THIS SHEET SHALL BE AS DETAILED FOR EACH SIGN. THE COLORS SHALL CONFORM WITH THE COLORS ADOPTED BY AASHTO AND APPROVED BY THE FHWA.

SPECIFICATIONS

REGULATORY SIGNS SHALL MEET THE VERMONT STANDARD SPECIFICATIONS FOR CONSTRUCTION "TRAFFIC SIGNS".

OTHER STDS. REQUIRED: E-144, E-151

REVISIONS AND CORRECTIONS

OCT. 30, 1987 - DATE OF ORIGINAL ISSUE
SEPT. 20, 1995 - ADDED AND DELETED SIGN DETAILS, ADDED SIGN ID NUMBERS, MINOR NOTE REVISIONS.
JUNE 15, 2004 - CHANGED REFLECTIVE SHEETING TO TYPE III OR TYPE VIII

APPROVED

DIRECTOR OF PROGRAM DEVELOPMENT

TRAFFIC OPERATIONS ENGINEER

FEDERAL HIGHWAY ADMINISTRATION

REGULATORY SIGN DETAILS

VERMONT AGENCY OF TRANSPORTATION

STANDARD
E-143