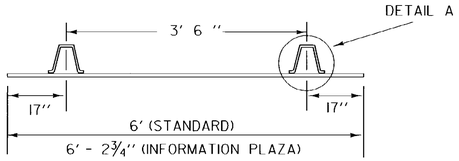


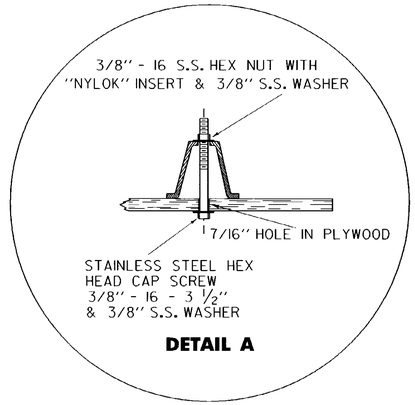


**DETAIL A**

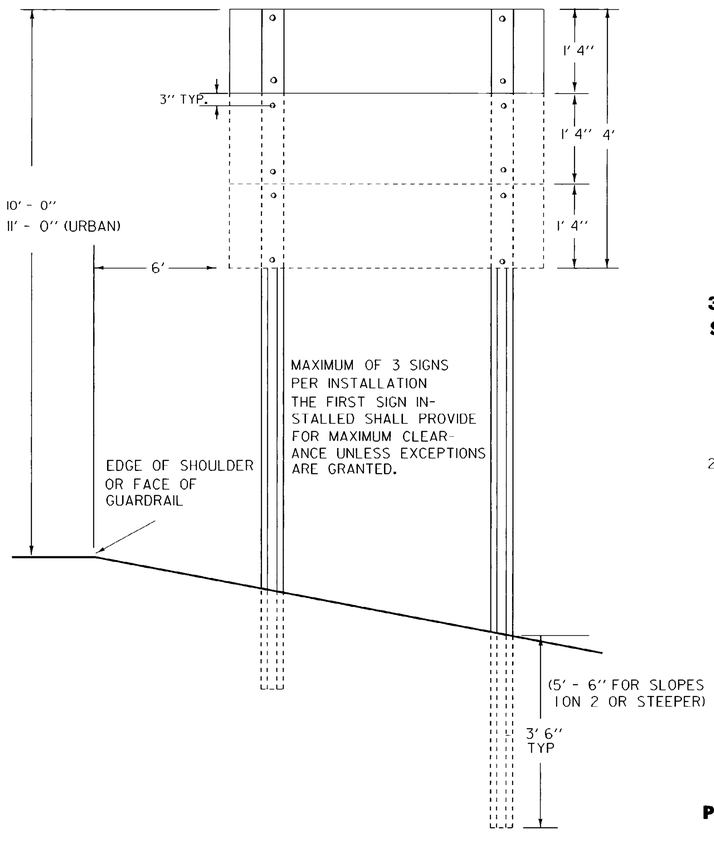


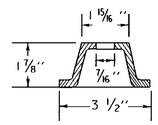


**3#/LF FLANGED CHANNEL STEEL SIGN POST DETAIL**

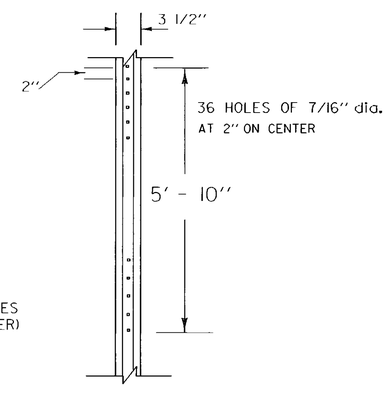


**POST DRILLING DETAIL**

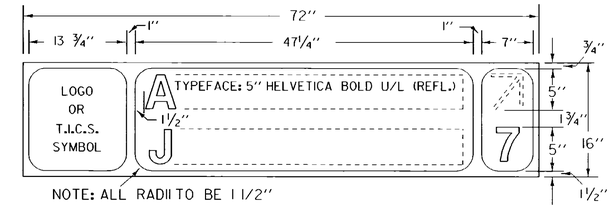


**TYPE A**

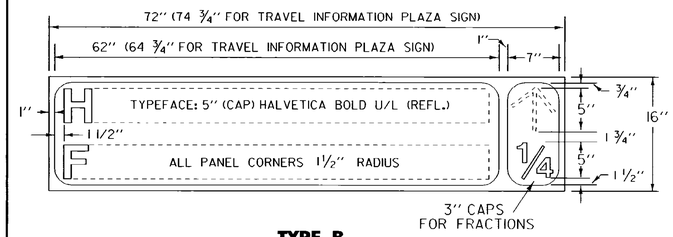


**TYPE B**

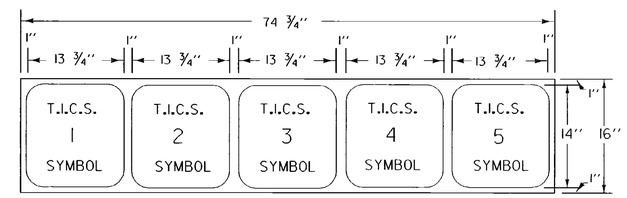


**TYPE C**

ONLY USED ON APPROACHES
TO INFORMATION PLAZAS

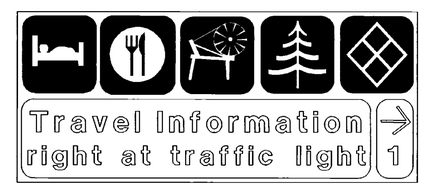


**EXAMPLE OF PLAZA INFORMATION SIGN**

FOR MORE DETAILS ON THE STATE'S INFORMATION SYSTEM, WRITE OR CALL: TRAVEL INFORMATION COUNCIL, C/O AGENCY OF TRANSPORTATION, MAINTENANCE DIVISION, NATIONAL LIFE BUILDING, MONTPELIER, VERMONT 05602 (802) 828-2651.

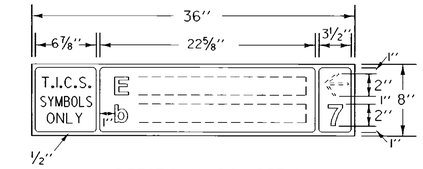


DIRECTIONAL SIGN DETAIL
FOR USE ON HIGHWAYS WITH SPEEDS
OF 30 M.P.H. OR LESS

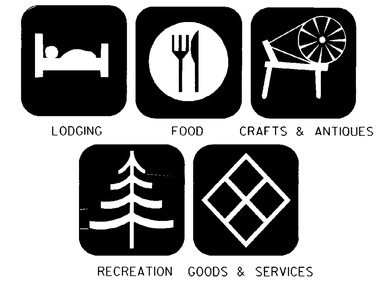


THE SYMBOLS ABOVE ARE FEATURED ON VERMONT'S TRAVEL INFORMATION PLAZAS, WHICH ARE FREE-STANDING OUTDOOR KIOSKS FOUND AT INTERSTATE REST AREAS, WELCOME CENTERS, AND NEAR KEY POINTS OF INTEREST. PLAZA LOCATIONS ARE INDICATED ON THE OFFICIAL STATE MAP BY THE SYMBOL ?.

MATERIALS:

SIGN BASE MATERIAL SHALL BE HIGH DENSITY OVERLAID PLYWOOD, ⅝" THICK, WHICH HAS BEEN SEALED ON THE EDGES AND PAINTED BLACK. THE BACK OF THE SIGNBOARD SHALL ALSO BE PAINTED BLACK. EACH SIGNBOARD IS TO BE DRILLED WITH FOUR 7/16" HOLES. THE INTERIOR OF THE HOLES SHALL BE PAINTED OR OTHERWISE SEALED AGAINST THE WEATHER.

DIRECTIONAL ARROWS AND MILEAGE NUMBERS WILL BE MADE OF REFLECTORIZED MATERIAL. (ENGINEERING GRADE)

COLOR:

SIGNBOARD FACES WILL HAVE BLACK BACKGROUND WITH WHITE BORDER. T.I.C.S. SYMBOL BACKGROUNDS WILL BE COLORED AS FOLLOWS:

LODGING - MAGENTA (PINK)
FOOD - ORANGE
CRAFTS & ANTIQUES - AQUA
RECREATION - BROWN
GOODS AND OTHER SERVICES - BLACK

ALL SYMBOLS WILL BE REFLECTORIZED.

TEXT LAYOUT:

NAME OF BUSINESS ENTERPRISE WILL BE IN UPPER AND LOWER CASE LETTERS STARTING FLUSH LEFT ON THE TOP LINE, AND MAY, ONLY WHEN NECESSARY, EXTEND TO THE SECOND LINE, (FLUSH LEFT ALSO). DIRECTIONAL INFORMATION WILL BE ALL IN LOWER CASE (NO CAPS), AND WILL ALWAYS BE ON THE SECOND LINE, EITHER FLUSH LEFT OR FOLLOWING THE END OF THE ESTABLISHMENT'S NAME.

**OTHER STDS. REQUIRED:** E-160

REVISIONS AND CORRECTIONS

AUG. 22, 1988 - DATE OF ORIGINAL ISSUE
AUG. 08, 1995 - MINOR DETAIL AND NOTE REVISIONS

APPROVED FOR THIS PROJECT AND/OR DESIGN IMPLEMENTATION. FHWA FINAL APPROVAL PENDING.

APPROVED

DIRECTOR OF ENGINEERING

TRAFFIC AND SAFETY ENGINEER

# TRAVEL INFORMATION COUNCIL SIGNS

/traf/std/stdel25.dgn : stdel25.i

VERMONT AGENCY OF TRANSPORTATION

STANDARD
E-125