REINFORCED CONCRETE DROP INLET TOP WITH VERTICAL CURB

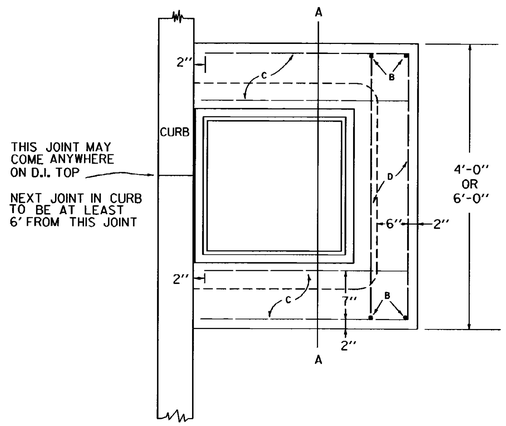

PLAN

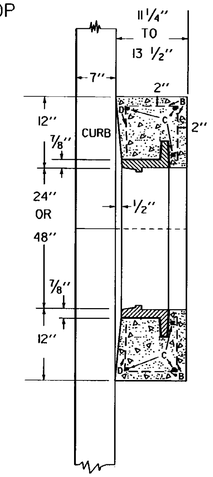

SECTION A-A

STEEL SCHEDULE FOR 4'-0" X 4'-0" D.I.

BAR	NO	LENGTH	
B	2	4'-8"	
C	6	2'-9"	STRAIGHT
D	2	3'-8"	STRAIGHT

0'-6" 3'-8" 0'-6"

CONCRETE CLASS B 0.28 C.Y.
REINFORCING STEEL 35 LBS.

STEEL SCHEDULE FOR 4'-0" X 6'-0" D.I.

BAR	NO	LENGTH	
B	2	6'-8"	
C	6	2'-9"	STRAIGHT
D	2	5'-8"	STRAIGHT

0'-6" 3'-8" 0'-6"

CONCRETE CLASS B 0.34 C.Y.
REINFORCING STEEL 43 LBS.

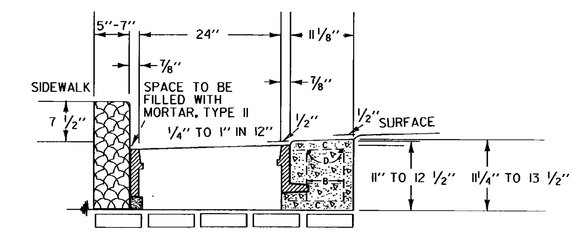

DEPTH OF CURB ACROSS D.I. TO BE 18" ± 1"

ELEVATION OF REINFORCED CONCRETE DROP INLET TOP WITH VERTICAL CURB

GENERAL NOTES

CONCRETE TO CONFORM TO STRUCTURAL CONCRETE, SECTION 501.

ALL REINFORCING STEEL TO BE No. 5 DEFORMED BARS.

THESE TOPS TO BE USED WITH BOTTOM SECTIONS SHOWN ON STANDARD SHEETS D-5, D-8, AND D-13.

ALL REINFORCING STEEL TO HAVE A 2" MINIMUM COVER

CAST IRON GRATE AND FRAME IN ACCORDANCE AND PAID FOR UNDER SECTION 604.

PRECAST COVER TO BE CONSTRUCTED AND INSTALLED AS SHOWN ON STANDARD SHEET D-8.

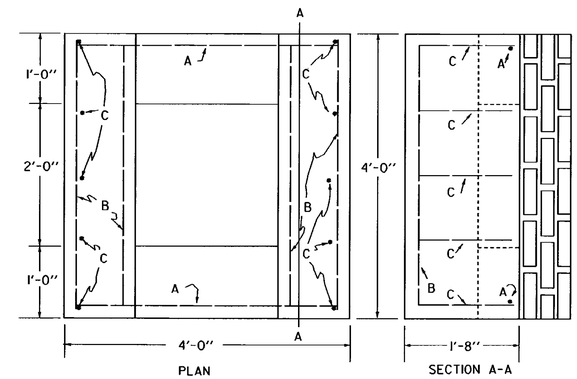

PLAN SECTION A-A

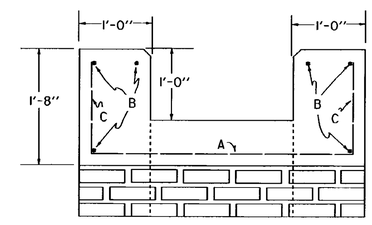

ELEVATION

CONCRETE THROAT ADAPTER

STEEL SCHEDULE

BAR	NO	LENGTH	TYPE
A	2	3' - 8"	STRAIGHT
B	6	3' - 8"	STRAIGHT
C	10	1' - 4"	STRAIGHT

ALL REINFORCING STEEL TO BE No. 5 DEFORMED BARS.

CONCRETE TO CONFORM TO STRUCTURAL CONCRETE SECTION 501.

CONCRETE CLASS B 0.59 C.Y.
(NOT INCLUDING COVER)
REINFORCING STEEL 45 LBS.

REVISIONS AND CORRECTIONS

DEC. 6, 1971 - ORIGINAL APPROVAL

JUNE 1, 1994 - REISSUED, WITHOUT CHANGE, UNDER NEW SIGNATURES.

APPROVED

APPROVED FOR THIS PROJECT AND/OR DESIGN IMPLEMENTATION. FHWA FINAL APPROVAL PENDING.

Gordon B. MacArthur P.E.
DIRECTOR OF ENGINEERING

John M. Murphy, P.E.
DESIGN ENGINEER

REINFORCED CONCRETE DROP INLET WITH VERTICAL CURB

REINFORCED CONCRETE DROP INLET THROAT ADAPTER

VERMONT AGENCY OF TRANSPORTATION

STANDARD

D-9