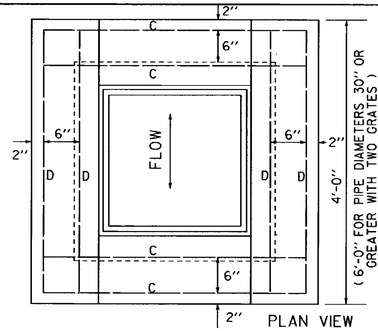

PLAN VIEW

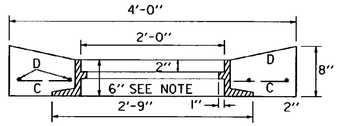

NOTE : FRAME SHOWN IS FOR TYPE A GRATE, SEE SHEET D-11. FOR TYPE B GRATE AND FRAME, SEE SHEET D-16 (EXCEPT THE FRAME DEPTH DIMENSION SHALL BE 6"). TOP FOR REINFORCED CONCRETE DROP INLET WITH GRATE FOR USE IN DITCHES

STEEL SCHEDULE

4'x4' DROP INLET TYPE A 12", 15", 18", 24"							4'x6' DROP INLET WITH TWO GRATES TYPE B 30", 36"											TYPE C 4'x6' DROP INLET WITH ONE GRATE WITH 4'x6' TOP 30", 36"										
DEPTH	G	LENGTH	H,J	LENGTH	C,D	LENGTH	G	LENGTH	H	LENGTH	J	LENGTH	C	LENGTH	D	LENGTH	DEPTH	G	LENGTH	H	LENGTH	J	LENGTH	C	LENGTH	D	LENGTH	DEPTH
3'-0"	15	2'-3"	22	3'-8"	8	3'-8"											3'-0"											
3'-6"	15	2'-9"	22	3'-8"	8	3'-8"											3'-6"											
4'-0"	15	3'-3"	29	3'-8"	8	3'-8"	17	3'-3"	19	3'-8"	10	5'-8"	4	3'-8"	4	5'-8"	4'-0"	17	3'-8"	19	3'-8"	10	5'-8"	6	3'-8"	4	5'-8"	4'-0"
4'-6"	15	3'-9"	29	3'-8"	8	3'-8"	17	3'-9"	19	3'-8"	10	5'-8"	4	3'-8"	4	5'-8"	4'-6"	17	4'-2"	19	3'-8"	10	5'-8"	6	3'-8"	4	5'-8"	4'-6"
5'-0"	15	4'-3"	35	3'-8"	8	3'-8"	17	4'-3"	23	3'-8"	13	5'-8"	4	3'-8"	4	5'-8"	5'-0"	17	4'-8"	23	3'-8"	13	5'-8"	6	3'-8"	4	5'-8"	5'-0"
5'-6"	15	4'-9"	35	3'-8"	8	3'-8"	17	4'-9"	23	3'-8"	13	5'-8"	4	3'-8"	4	5'-8"	5'-6"	17	5'-2"	23	3'-8"	13	5'-8"	6	3'-8"	4	5'-8"	5'-6"
6'-0"	15	5'-3"	41	3'-8"	8	3'-8"	17	5'-3"	27	3'-8"	15	5'-8"	4	3'-8"	4	5'-8"	6'-0"	17	5'-8"	27	3'-8"	15	5'-8"	6	3'-8"	4	5'-8"	6'-0"
6'-6"	15	5'-9"	41	3'-8"	8	3'-8"	17	5'-9"	31	3'-8"	15	5'-8"	4	3'-8"	4	5'-8"	6'-6"	17	6'-2"	31	3'-8"	15	5'-8"	6	3'-8"	4	5'-8"	6'-6"
7'-0"	15	6'-3"	47	3'-8"	8	3'-8"	17	6'-3"	35	3'-8"	17	5'-8"	4	3'-8"	4	5'-8"	7'-0"	17	6'-8"	35	3'-8"	17	5'-8"	6	3'-8"	4	5'-8"	7'-0"
7'-6"	15	6'-9"	47	3'-8"	8	3'-8"	17	6'-9"	35	3'-8"	17	5'-8"	4	3'-8"	4	5'-8"	7'-6"	17	7'-2"	35	3'-8"	17	5'-8"	6	3'-8"	4	5'-8"	7'-6"
8'-0"	15	7'-3"	53	3'-8"	8	3'-8"	17	7'-3"	39	3'-8"	19	5'-8"	4	3'-8"	4	5'-8"	8'-0"	17	7'-8"	39	3'-8"	19	5'-8"	6	3'-8"	4	5'-8"	8'-0"

STEEL AND CONCRETE QUANTITIES

4'x4' DROP INLET 12"-15"-18"-24" TYPE A			4'x6' DROP INLET WITH TWO GRATES 30" TYPE B 36"					4'x6' DROP INLET WITH ONE GRATE 30" TYPE C 36"				
DEPTH	CONC. C.Y.	STEEL LBS	CONC. C.Y.	STEEL LBS	CONC.* C.Y.	STEEL LBS	DEPTH	CONC. C.Y.	STEEL LBS	CONC. C.Y.	STEEL LBS	DEPTH
3'-0"	1.7	150					3'-0"					
3'-6"	1.9	158					3'-6"					
4'-0"	2.1	193	2.7	228			4'-0"	2.8	244			
4'-6"	2.3	200	3.0	237	2.9	237	4'-6"	3.1	252	3.0	252	4'-6"
5'-0"	2.6	231	3.3	279	3.2	279	5'-0"	3.4	294	3.3	294	5'-0"
5'-6"	2.8	239	3.6	288	3.5	288	5'-6"	3.7	303	3.6	303	5'-6"
6'-0"	3.0	270	3.9	324	3.8	324	6'-0"	4.0	339	3.9	339	6'-0"
6'-6"	3.2	278	4.2	348	4.1	348	6'-6"	4.3	363	4.2	363	6'-6"
7'-0"	3.5	308	4.5	384	4.4	384	7'-0"	4.6	399	4.5	399	7'-0"
7'-6"	3.7	316	4.8	393	4.7	393	7'-6"	4.9	408	4.8	408	7'-6"
8'-0"	3.9	347	5.1	429	5.0	429	8'-0"	5.2	444	5.1	444	8'-0"

FOR 2nd 30" PIPE DEDUCT 0.18 C.Y. FOR 2nd 42" PIPE DEDUCT 0.36 C.Y., OR 0.18 FOR 1 PIPE
FOR 2nd 36" PIPE DEDUCT 0.26 C.Y. FOR 2nd 48" PIPE DEDUCT 0.47 C.Y., OR 0.24 FOR 1 PIPE

ALL REINFORCING STEEL TO BE NO. 5 DEFORMED BARS, EVENLY SPACED WITH A MAXIMUM SPACING OF 12" C/C.

ALL STEEL TO HAVE 2 INCH MIN. COVER.

DROP INLET TO BE CONSTRUCTURED IN ACCORDANCE WITH STRUCTURAL CONCRETE, SECTION 501.

GRATES TO CONFORM TO DROP INLETS, CATCH BASINS, AND MANHOLES, SECTION 604.

FURNISHING AND LAYING OF BRICKS FOR ADJUSTING ELEVATION OF GRATE SHALL BE INCLUDED IN UNIT BID PRICE FOR CONCRETE, CLASS B, PAY ITEM 501.25, AND THEIR VOLUME TO BE INCLUDED IN THE FINAL QUANTITIES.

MORTAR, TYPE II, TO BE USED AS JOINT FILLER AND LAYING OF BRICK.

FOR PIPES OF 30" OR MORE IN DIAMETER, ALLOWANCE SHALL BE MADE FOR THE OPENING IN COMPUTING CONCRETE VOLUMES. THIS DEDUCTION WILL BE BASED ON THE RATED DIAMETER OF THE PIPE USED, WITH THE SAME DEDUCTION FOR CONCRETE AND METAL PIPE. ABOVE TABLES INDICATE DEDUCTION FOR ONE PIPE.

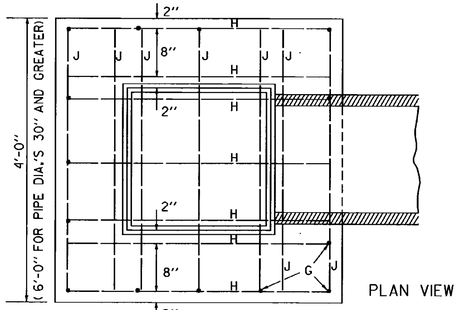

PLAN VIEW

- TYPE A -

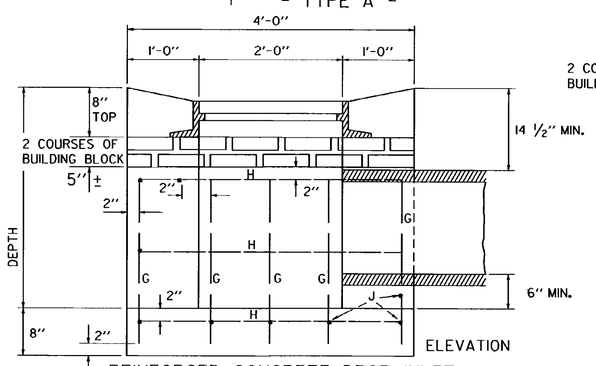

ELEVATION

REINFORCED CONCRETE DROP INLET FOR USE IN DITCHES

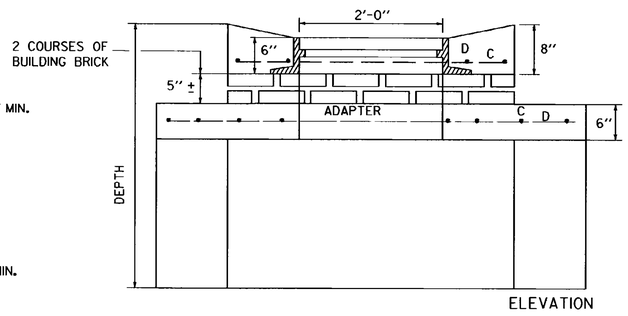

ELEVATION

4'x6' DROP INLET WITH 4'x4' TOP TOP WITH ONE CAST IRON GRATE

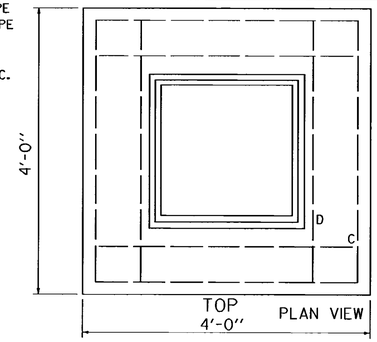

PLAN VIEW

- TYPE D -

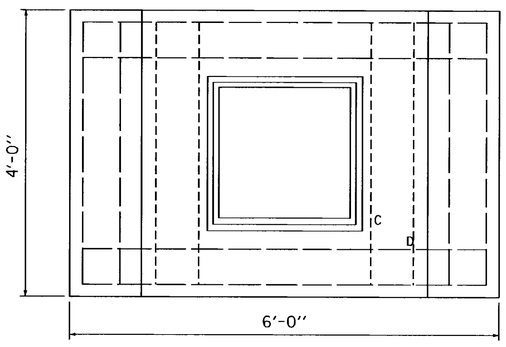

PLAN VIEW

TOP AND ADAPTER

STEEL AND CONCRETE QUANTITIES

4'x6' DROP INLET WITH ONE GRATE WITH 4'x4' TOP TYPE D				
	30"		36"	
DEPTH	STEEL LBS	CONC. C.Y.	CONC. C.Y.	STEEL LBS
5'-0"	3.2	313	3.1	313
5'-6"	3.5	322	3.4	322
6'-0"	3.8	358	3.7	358
6'-6"	4.1	382	4.0	382
7'-0"	4.4	418	4.3	418
7'-6"	4.7	427	4.6	427
8'-0"	5.0	463	4.9	463

STEEL SCHEDULE TYPE D

4'x6' DROP INLET WITH ONE GRATE WITH 4'x4' TOP 30", 36"											
G	LENGTH	H	LENGTH	J	LENGTH	C	LENGTH	D	LENGTH	DEPTH
17	3'-7"	23	3'-8"	13	5'-8"	12	3'-8"	4 4	5'-8" 3'-8"	5'-0"
17	4'-1"	23	3'-8"	13	5'-8"	12	3'-8"	4 4	5'-8" 3'-8"	5'-6"
17	4'-7"	27	3'-8"	15	5'-8"	12	3'-8"	4 4	5'-8" 3'-8"	6'-0"
17	5'-1"	31	3'-8"	15	5'-8"	12	3'-8"	4 4	5'-8" 3'-8"	6'-6"
17	5'-7"	35	3'-8"	17	5'-8"	12	3'-8"	4 4	5'-8" 3'-8"	7'-0"
17	6'-1"	35	3'-8"	17	5'-8"	12	3'-8"	4 4	5'-8" 3'-8"	7'-6"
17	6'-7"	39	3'-8"	19	5'-8"	12	3'-8"	4 4	5'-8" 3'-8"	8'-0"

ELEVATION

- TYPE B -

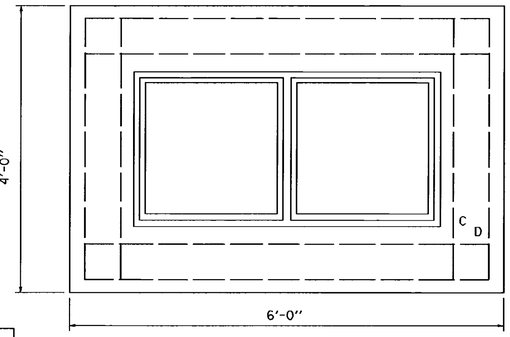

PLAN VIEW

4'x6' DROP INLET TOP WITH TWO CAST IRON GRATES

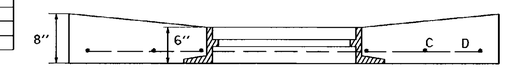

ELEVATION

- TYPE C -

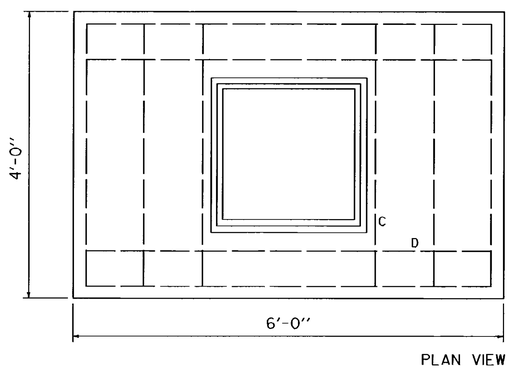

PLAN VIEW

4'x6' DROP INLET TOP WITH ONE CAST IRON GRATE

REVISIONS AND CORRECTIONS

APR. 4, 1973 - ORIGINAL APPROVAL

JUNE 1, 1994 - REISSUED, WITHOUT CHANGE, UNDER NEW SIGNATURES.

APPROVED

APPROVED FOR THIS PROJECT AND/OR DESIGN IMPLEMENTATION. FHWA FINAL APPROVAL PENDING.

Gordon B. MacArthur, P.E.
DIRECTOR OF ENGINEERING

Robert M. Murphy, P.E.
DESIGN ENGINEER

REINFORCED CONCRETE DROP INLET WITH GRATE FOR USE IN DITCHES

VERMONT AGENCY OF TRANSPORTATION

STANDARD

D-6