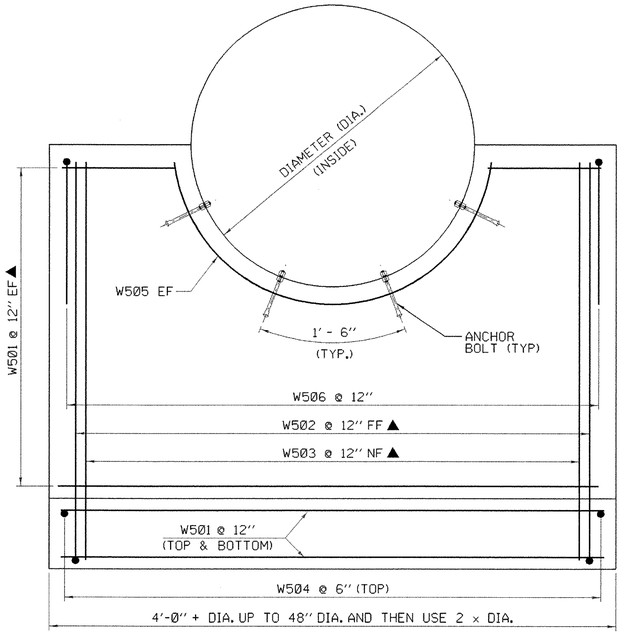

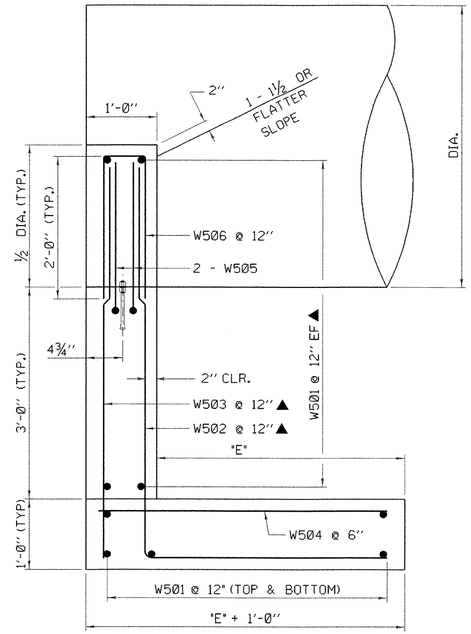

REBAR NOTES:

NF = NEAR FACE
FF = FAR FACE
EF = EACH FACE
▲ = CUT TO FIT IN FIELD

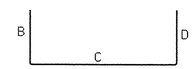

REBAR TYPE: 17

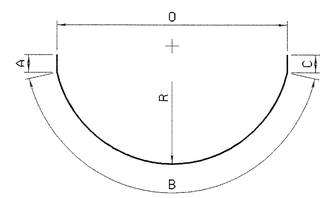

REBAR TYPE: 10

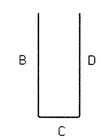

REBAR TYPE: S10

DESIGN CRITERIA

1. ASSUMED ALLOWABLE LOAD FOR SPREAD FOOTINGS
   - ON SOIL: 4 KSF
   - ON LEDGE: 10 KSF
2. REINFORCING STEEL GRADE: 60 KSI
3. CONCRETE CLASS B: 3500 PSI
4. SOIL UNIT WEIGHT: 140 PSF
5. ASSUMED FOOTING FRICTION COEFFICIENT: 0.55
6. SOIL FRICTION ANGLE: 33.67°
7. DEDUCT VOLUME OF PIPE.
8. ALL EXPOSED EDGES WILL BE CHAMFERED ONE INCH.
9. ALL REBAR CLEARANCES SHALL BE 3 INCHES UNLESS OTHERWISE NOTED.
10. CONSTRUCTION JOINT SURFACE SHALL BE ROUGH.

ANCHOR BOLT NOTES

1. ANCHOR BOLTS ARE REQUIRED ON NON-CONCRETE CULVERTS AND ARE TO BE INCLUDED IN THE COST OF THE PIPE.
2. ANCHOR BOLTS SHALL BE ½" DIA. x 8" WITH TWO ¾" HEXAGONAL NUTS. MATERIALS SHALL MEET THE REQUIREMENTS OF ASTM A307. 9/16" HOLES IN PIPE TO BE DRILLED OR PUNCHED PRIOR TO COATING OF PIPE, OR FIELD DRILLED AND COATED WHEN REQUIRED DUE TO A FIELD CHANGE.

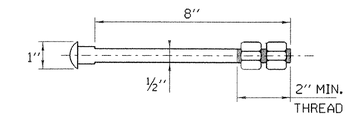

GALVANIZED ANCHOR BOLT

PIPE DIAMETER	72"	66"	60"	54"	48"	42"	36"	30"	24"	18"
DIMENSION "E"	42"	42"	42"	36"	36"	36"	30"	30"	30"	30"
CONCRETE QUANTITY (CY)	4.14	3.74	3.34	2.79	2.43	2.25	1.94	1.77	1.61	1.44
LENGTH OF BARS	665'	604'	544'	455'	402'	363'	305'	271'	254'	222'
WEIGHT OF BARS (LB)	694	630	567	475	420	379	318	283	265	232
CARRIAGE BOLTS (No.)	8	7	7	6	6	5	5	4	4	3

STEEL SCHEDULE FOR REINFORCED CONCRETE HEADWALL DIA. 18"

ITEM	EACH	SIZE	LENGTH	MARK	TYPE	A	B	C	D	O	R
1	18	5	5'-0"	W501	STR.						
2	6	5	6'-8"	W502	17		4'-3"	2'-5"	—		
3	6	5	4'-3"	W503	STR.						
4	11	5	3'-0"	W504	STR.						
5	2	5	2'-8"	W505	10	—	2'-8"	—		2'-0"	1'-0"
6	6	5	4'-7"	W506	S10		2'-0"	0'-7"	2'-0"		

STEEL SCHEDULE FOR REINFORCED CONCRETE HEADWALL DIA. 24"

ITEM	EACH	SIZE	LENGTH	MARK	TYPE	A	B	C	D	O	R
1	18	5	5'-6"	W501	STR.						
2	7	5	6'-11"	W502	17		4'-6"	2'-5"	—		
3	7	5	4'-6"	W503	STR.						
4	12	5	3'-0"	W504	STR.						
5	2	5	3'-5"	W505	10	—	3'-5"	—		2'-6"	1'-3"
6	7	5	4'-7"	W506	S10		2'-0"	0'-7"	2'-0"		

STEEL SCHEDULE FOR REINFORCED CONCRETE HEADWALL DIA. 30"

ITEM	EACH	SIZE	LENGTH	MARK	TYPE	A	B	C	D	O	R
1	18	5	6'-0"	W501	STR.						
2	7	5	7'-2"	W502	17		4'-9"	2'-5"	—		
3	7	5	4'-9"	W503	STR.						
4	13	5	3'-0"	W504	STR.						
5	2	5	4'-3"	W505	10	—	4'-3"	—		3'-0"	1'-6"
6	7	5	4'-7"	W506	S10		2'-0"	0'-7"	2'-0"		

STEEL SCHEDULE FOR REINFORCED CONCRETE HEADWALL DIA. 36"

ITEM	EACH	SIZE	LENGTH	MARK	TYPE	A	B	C	D	O	R
1	18	5	6'-6"	W501	STR.						
2	8	5	7'-5"	W502	17		5'-0"	2'-5"	—		
3	8	5	5'-0"	W503	STR.						
4	14	5	3'-0"	W504	STR.						
5	2	5	5'-0"	W505	10	—	5'-0"	—		3'-6"	1'-9"
6	8	5	4'-7"	W506	S10		2'-0"	0'-7"	2'-0"		

STEEL SCHEDULE FOR REINFORCED CONCRETE HEADWALL DIA. 42"

ITEM	EACH	SIZE	LENGTH	MARK	TYPE	A	B	C	D	O	R
1	22	5	7'-0"	W501	STR.						
2	8	5	8'-2"	W502	17		5'-3"	2'-11"	—		
3	8	5	5'-3"	W503	STR.						
4	15	5	3'-6"	W504	STR.						
5	2	5	5'-10"	W505	10	—	5'-10"	—		4'-0"	2'-0"
6	8	5	4'-7"	W506	S10		2'-0"	0'-7"	2'-0"		

STEEL SCHEDULE FOR REINFORCED CONCRETE HEADWALL DIA. 48"

ITEM	EACH	SIZE	LENGTH	MARK	TYPE	A	B	C	D	O	R
1	22	5	7'-6"	W501	STR.						
2	9	5	8'-5"	W502	17		5'-6"	2'-11"	—		
3	9	5	5'-6"	W503	STR.						
4	16	5	3'-6"	W504	STR.						
5	2	5	6'-7"	W505	10	—	6'-7"	—		4'-6"	2'-3"
6	9	5	4'-7"	W506	S10		2'-0"	0'-7"	2'-0"		

STEEL SCHEDULE FOR REINFORCED CONCRETE HEADWALL DIA. 54"

ITEM	EACH	SIZE	LENGTH	MARK	TYPE	A	B	C	D	O	R
1	22	5	8'-6"	W501	STR.						
2	10	5	8'-8"	W502	17		5'-9"	2'-11"	—		
3	10	5	5'-9"	W503	STR.						
4	18	5	3'-6"	W504	STR.						
5	2	5	7'-5"	W505	10	—	7'-5"	—		5'-0"	2'-6"
6	10	5	4'-7"	W506	S10		2'-0"	0'-7"	2'-0"		

STEEL SCHEDULE FOR REINFORCED CONCRETE HEADWALL DIA. 60"

ITEM	EACH	SIZE	LENGTH	MARK	TYPE	A	B	C	D	O	R
1	24	5	9'-6"	W501	STR.						
2	11	5	9'-5"	W502	17		6'-0"	3'-5"	—		
3	11	5	6'-0"	W503	STR.						
4	20	5	4'-0"	W504	STR.						
5	2	5	8'-2"	W505	10	—	8'-2"	—		5'-6"	2'-9"
6	11	5	4'-7"	W506	S10		2'-0"	0'-7"	2'-0"		

STEEL SCHEDULE FOR REINFORCED CONCRETE HEADWALL DIA. 66"

ITEM	EACH	SIZE	LENGTH	MARK	TYPE	A	B	C	D	O	R
1	24	5	10'-6"	W501	STR.						
2	12	5	9'-8"	W502	17		6'-3"	3'-5"	—		
3	12	5	6'-3"	W503	STR.						
4	22	5	4'-0"	W504	STR.						
5	2	5	8'-11"	W505	10	—	8'-11"	—		6'-0"	3'-0"
6	12	5	4'-7"	W506	S10		2'-0"	0'-7"	2'-0"		

STEEL SCHEDULE FOR REINFORCED CONCRETE HEADWALL DIA. 72"

ITEM	EACH	SIZE	LENGTH	MARK	TYPE	A	B	C	D	O	R
1	24	5	11'-6"	W501	STR.						
2	13	5	9'-11"	W502	17		6'-6"	3'-5"	—		
3	13	5	6'-6"	W503	STR.						
4	24	5	4'-0"	W504	STR.						
5	2	5	9'-9"	W505	10	—	9'-9"	—		6'-6"	3'-3"
6	13	5	4'-7"	W506	S10		2'-0"	0'-7"	2'-0"		

NOT TO SCALE

REVISIONS AND CORRECTIONS

MAR. 12, 2007 - ORIGINAL APPROVAL DATE

APPROVED

Kevin A. Marchia
ROADWAY, TRAFFIC & SAFETY ENGINEER

Richard Fehrenbacher
DIRECTOR OF PROGRAM DEVELOPMENT

Mark D. Richter
FEDERAL HIGHWAY ADMINISTRATION

REINFORCED CONCRETE CRADLE HEADWALL

VERMONT AGENCY OF TRANSPORTATION

STANDARD

D-34