DETAILS OF CURB DRAINS

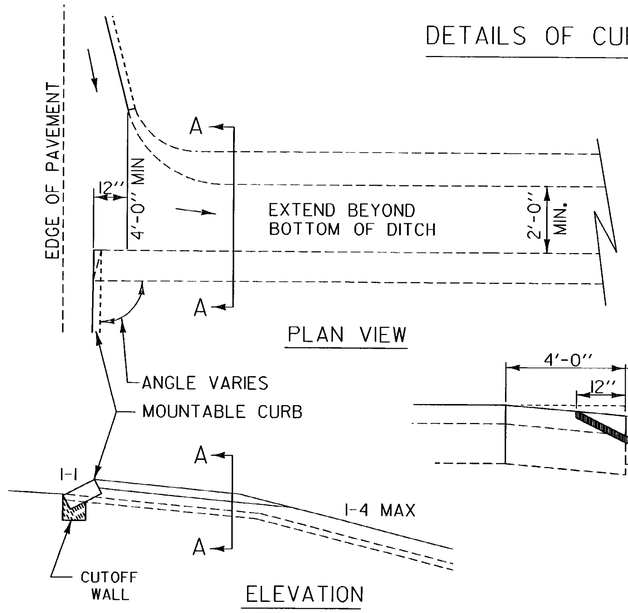

NOT TO BE USED ON ROADWAY GRADES EXCEEDING 2%

A 6'' DEPTH OF COARSE SAND OR GRAVEL SHALL BE USED TO REPLACE UNSUITABLE MATERIAL ENCOUNTERED BELOW SUBGRADE AT THE DIRECTION OF THE ENGINEER.

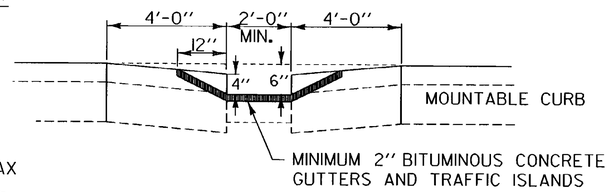

SECTION A-A

DROP INLET WITH GRATE IN TREATED GUTTER

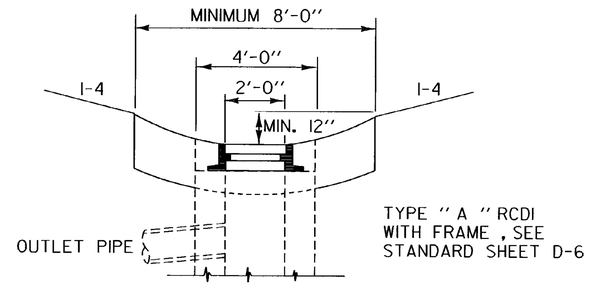

SODDING

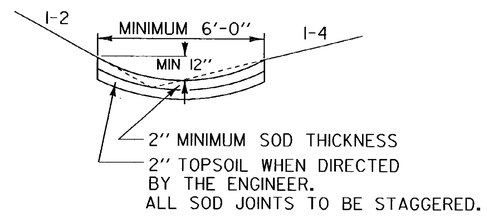

STONE FILL TYPE I
STONE FILL TYPE II

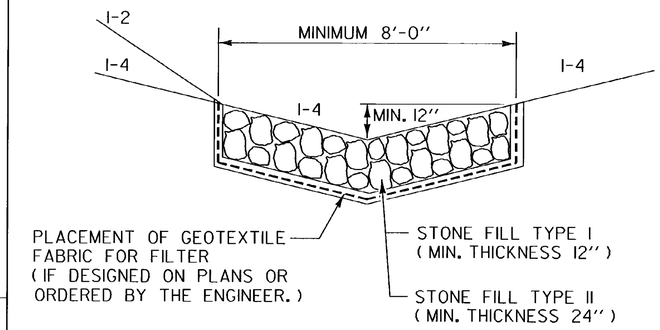

EXCAVATION PAID FOR
AS COMMON EXCAVATION.

BITUMINOUS CONCRETE GUTTERS AND TRAFFIC ISLANDS

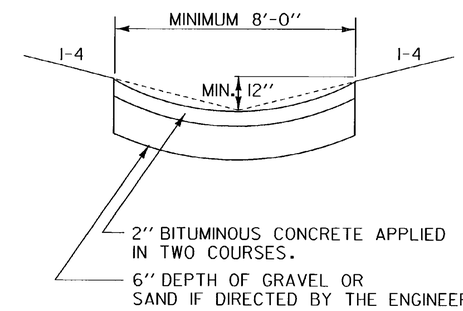

PORTLAND CEMENT CONCRETE GUTTER

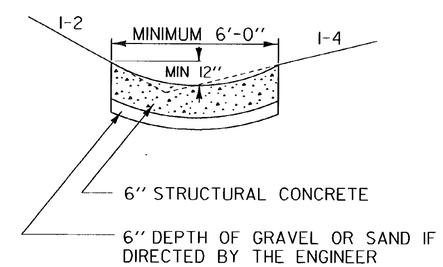

ON ALL OVERLAPS , PLACE STAPLES EVERY 18'', ALTERNATING ON BOTH SIDES OF 6'' OVERLAP.

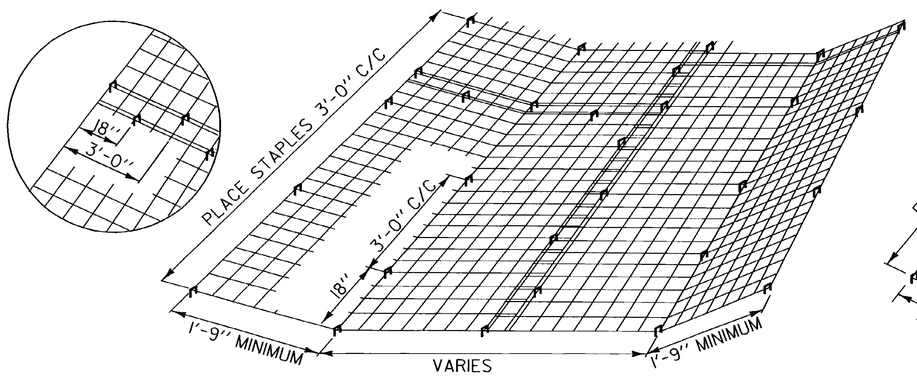

TYPICAL FLAT BOTTOM DITCH

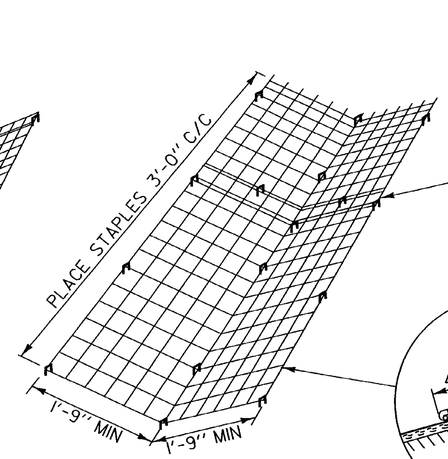

TYPICAL '' V '' DITCH

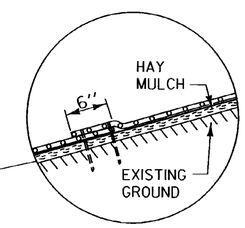

TYPICAL OVERLAP

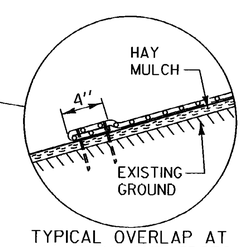

TYPICAL OVERLAP AT
ALL ENDS AND EDGES

DETAILS OF PLACING EROSION MATTING

REVISIONS AND CORRECTIONS

APR. 2, 1986 - ORIGINAL APPROVAL DATE

JUNE 1, 1994 - REISSUED, WITHOUT CHANGE, UNDER NEW SIGNATURES.

APPROVED

APPROVED FOR THIS PROJECT AND/OR DESIGN IMPLEMENTATION. FHWA FINAL APPROVAL PENDING.

DIRECTOR OF ENGINEERING

PE

DESIGN ENGINEER

TREATED GUTTERS

VERMONT AGENCY OF TRANSPORTATION

STANDARD

D-3