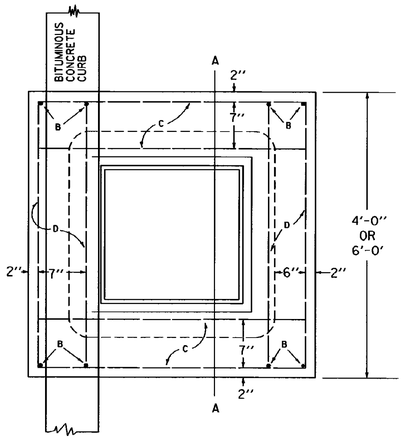

PLAN

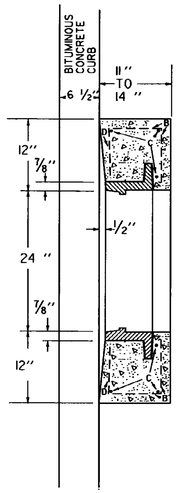

SECTION A-A

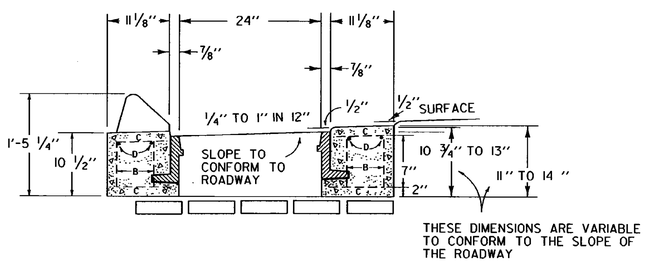

ELEVATION

TOP FOR A REINFORCED CONCRETE DROP INLET WITH BITUMINOUS CONCRETE CURB

4'-0" X 4'-0"
STEEL SCHEDULE

BAR	NO	LENGTH	
B	4	4'-8"	0'-6" 3'-8" 0'-6"
C	6	3'-6"	STRAIGHT
D	4	3'-8"	STRAIGHT

CONCRETE CLASS B = 0.41 C.Y.
REINFORCING STEEL = 58 LBS.

4'-0" X 6'-0"

CONCRETE CLASS B = 0.54 C.Y.
REINFORCING STEEL = 74 LBS.

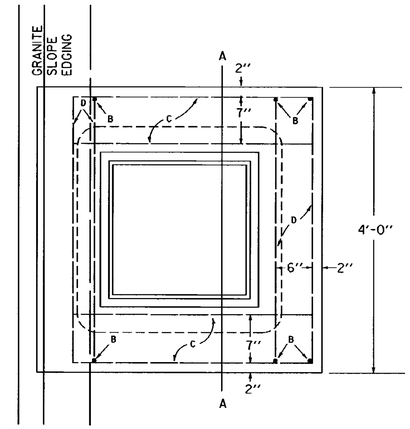

PLAN

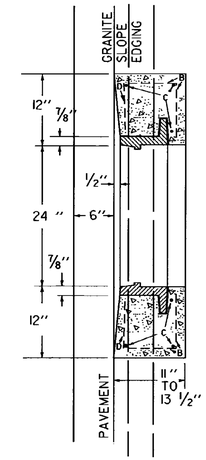

SECTION A-A

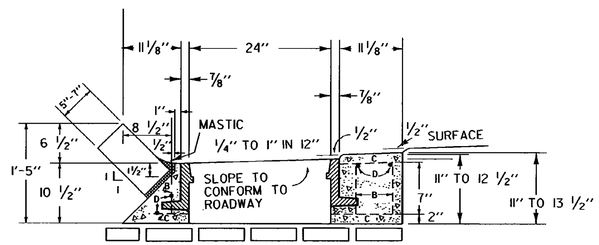

ELEVATION

TOP FOR A REINFORCED CONCRETE DROP INLET WITH GRANITE SLOPE EDGING

4'-0" X 4'-0"
STEEL SCHEDULE

BAR	NO	LENGTH	
B	2 1	4'-8" 4'-4"	4" OR 6" 3'-8" 4" OR 6"
C	4 2	3'-4" 2'-10"	STRAIGHT
D	4	3'-8"	STRAIGHT

CONCRETE CLASS B = 0.33 C.Y.
REINFORCING STEEL = 48 LBS.

4'-0" X 6'-0"

CONCRETE CLASS B = 0.42 C.Y.
REINFORCING STEEL = 63 LBS.

GENERAL NOTES

ALL REINFORCING STEEL TO BE No. 5 DEFORMED BARS.

FOR CAST IRON GRATE AND FRAME DETAIL, SEE STANDARD SHEET D-11 OR D-16.

REVISIONS AND CORRECTIONS

DEC. 6, 1971 - ORIGINAL APPROVAL

JUNE 1, 1994 - REISSUED, WITHOUT CHANGE, UNDER NEW SIGNATURES.

APPROVED

APPROVED FOR THIS PROJECT AND/OR DESIGN IMPLEMENTATION. FHWA FINAL APPROVAL PENDING.

Gordon S. MacPhee, P.E.
DIRECTOR OF ENGINEERING

John M. Murphy, P.E.
DESIGN ENGINEER

TOP FOR A DROP INLET WITH BITUMINOUS CONCRETE CURB
TOP FOR A DROP INLET GRANITE SLOPE EDGING

VERMONT AGENCY OF TRANSPORTATION

STANDARD
D-10