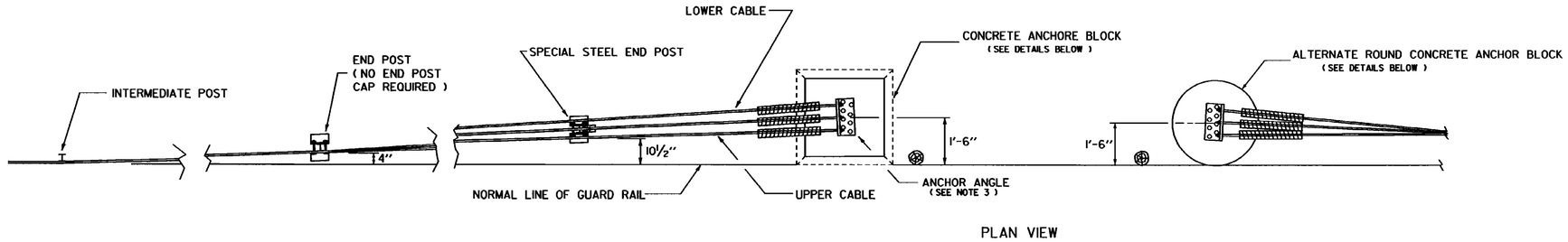

PLAN VIEW

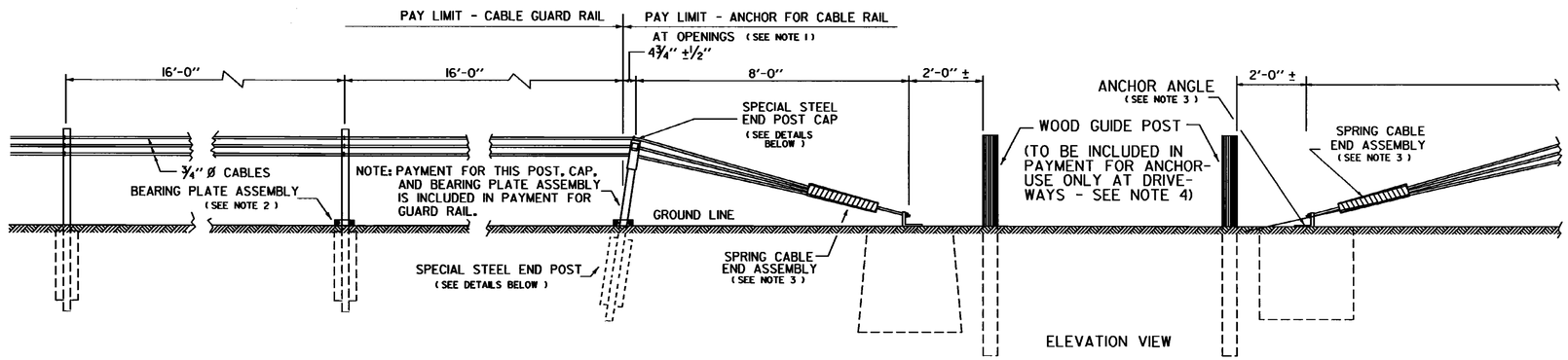

ELEVATION VIEW

CABLE GUARD RAIL (W/STEEL POSTS) (SEE NOTE 2)

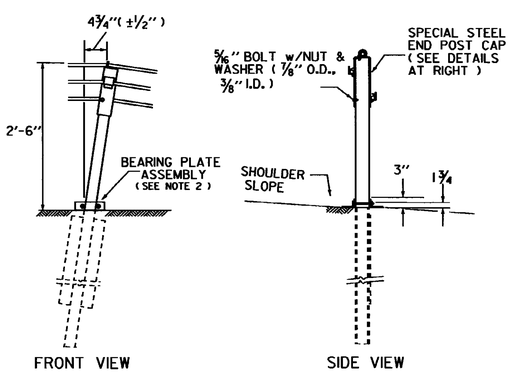

FRONT VIEW SIDE VIEW

SPECIAL STEEL END POST DETAILS

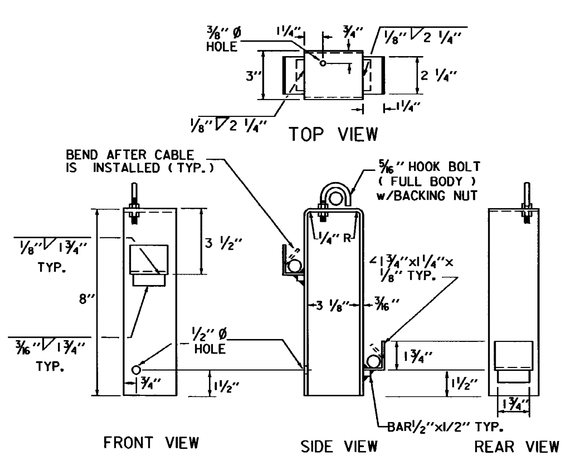

SPECIAL STEEL END POST END DETAILS

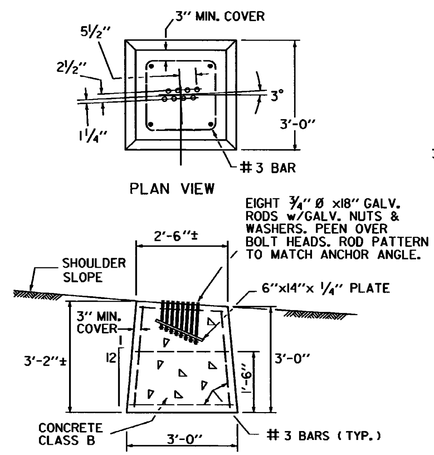

CONCRETE ANCHOR BLOCK DETAILS
(SEE NOTE 5)

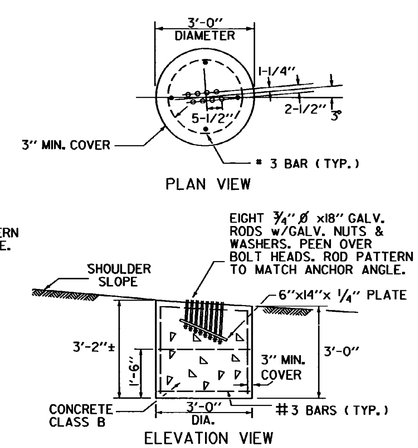

ALTERNATE ROUND CONCRETE
ANCHOR BLOCK DETAILS (SEE NOTE 5)

GENERAL NOTES

1. PAYMENT FOR ANCHOR FOR CABLE RAIL AT OPENINGS WILL BE FULL COMPENSATION FOR CONCRETE ANCHOR BLOCK, ANCHOR ANGLE, SPRING CABLE END ASSEMBLIES, ¾" Ø CABLES, WOOD GUIDE POST AND ALL LABOR, EQUIPMENT AND OTHER MATERIALS REQUIRED FOR INSTALLATION IN ACCORDANCE WITH THESE DETAILS.
2. FOR DETAILS OF CABLE GUARD RAIL WITH STEEL POSTS INCLUDING BEARING PLATE ASSEMBLY, SEE STANDARD SHEET G-6.
3. FOR DETAILS OF ANCHOR ANGLE AND SPRING CABLE END ASSEMBLY, SEE STANDARD SHEET G-6.
4. FOR DETAILS OF WOOD GUIDE POST, SEE STANDARD SHEET G-4.
5. USE OF EITHER CONCRETE ANCHOR BLOCK OR ALTERNATE ROUND CONCRETE ANCHOR BLOCK IS ALLOWED, AT THE CONTRACTORS' OPTION. FOR THE ALTERNATE ROUND CONCRETE ANCHOR BLOCK, IF THE EXCAVATED HOLE RETAINS ITS SHAPE, NO OTHER EXCAVATION IS REQUIRED - OTHERWISE FORM WITH SONO-TUBES OR EQUAL. THE CONCRETE ANCHOR BLOCK MAY BE EITHER PRECAST OR CAST-IN-PLACE WITH SMOOTH SIDES.

REVISIONS AND CORRECTIONS

JAN. 22, 1981 - ORIGINAL APPROVAL DATE
OCT. 31, 1985 - REVISED TO CONFORM TO 1986 SPECIFICATIONS
JUNE 1, 1994 - REISSUED, WITHOUT CHANGE, UNDER NEW SIGNATURES.
FEB. 23, 1995 - REMOVED CABLE GUARDRAIL W/WOOD POST.

APPROVED

APPROVED FOR THIS PROJECT AND/OR DESIGN IMPLEMENTATION. FHWA FINAL APPROVAL PENDING.

Gordon B. MacArthur
DIRECTOR OF ENGINEERING

DESIGN ENGINEER

ANCHOR FOR CABLE RAIL AT OPENINGS

VERMONT AGENCY OF TRANSPORTATION

STANDARD

G-10