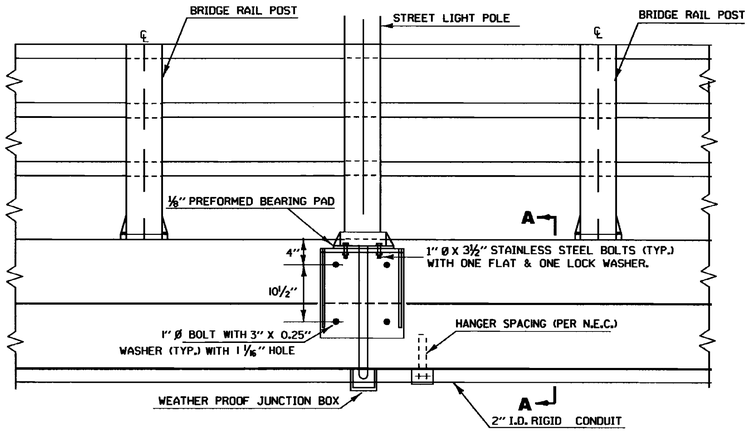

ELEVATION VIEW–FASCIA

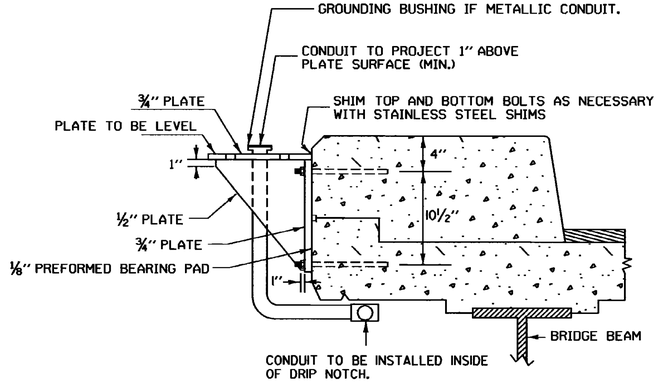

SECTION A–A

NOTES

JUNCTION BOXES AND EXPANSION COUPLINGS SHALL BE OF THE SAME MATERIAL AND FINISH AS THE CONDUIT. HANGERS AND HARDWARE SHALL BE GALVANIZED.

SIZE OF JUNCTION BOXES TO CONFORM TO THE REQUIREMENTS OF THE NATIONAL ELECTRICAL CODE. (N.E.C.)

CONTRACTOR SHALL SUBMIT DETAILED DRAWINGS OF HANGERS, JUNCTION BOXES, AND CONDUIT EXPANSION COUPLINGS TO ENGINEER FOR APPROVAL.

ANCHOR BOLTS, NUTS AND WASHERS AND TEMPLATE FOR ANCHOR BOLTS TO BE OBTAINED BY CONTRACTOR FROM POLE MANUFACTURER.

BRACKET ASSEMBLY SHALL BE GALVANIZED AFTER FABRICATION PER AASHTO M-232. STEEL IN BRACKET SHALL MEET THE REQUIREMENTS OF SUBSECTION 714.02.

SEE STANDARDS E-180A AND E-180B FOR POLE & LUMINAIRE DETAILS.

SEE STANDARD SHEET E-173 FOR PULL BOX DETAIL.

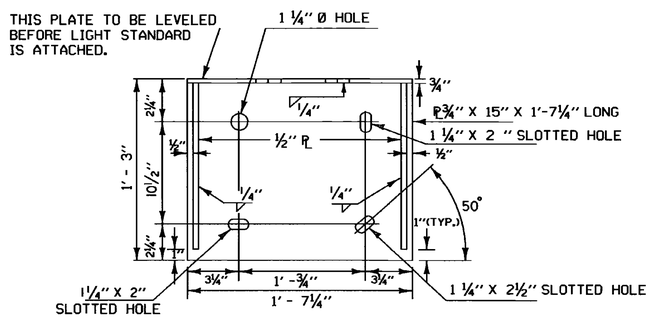

BRACKET ELEVATION VIEW

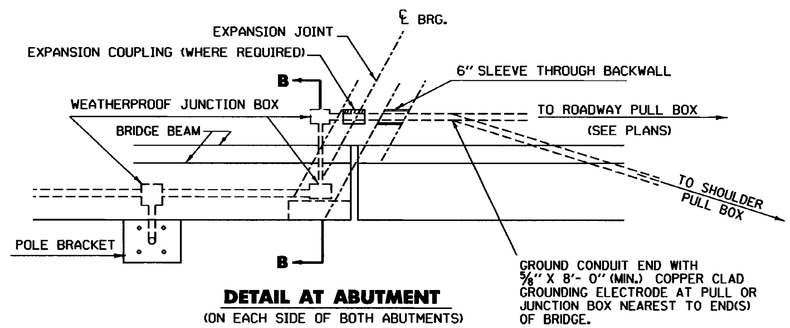

DETAIL AT ABUTMENT

(ON EACH SIDE OF BOTH ABUTMENTS)

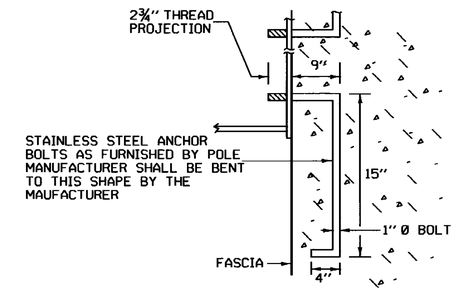

BOLT ORIENTATION PLAN VIEW

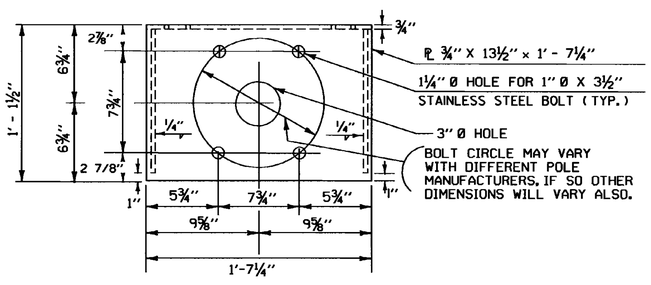

BRACKET PLAN VIEW FOR 11" BOLT CIRCLE

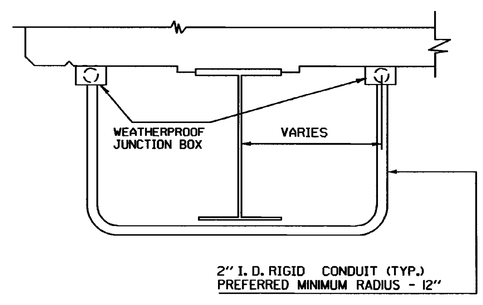

SECTION B–B

PREFERRED MINIMUM RADIUS - 12"

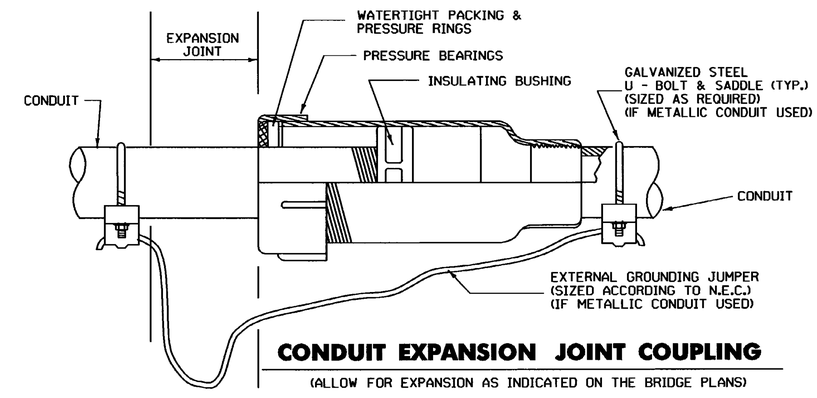

CONDUIT EXPANSION JOINT COUPLING

(ALLOW FOR EXPANSION AS INDICATED ON THE BRIDGE PLANS)

THIS SHEET IS NOT TO SCALE

OTHER STDS REQUIRED E-173, E180A, E-180B

REVISIONS AND CORRECTIONS

SEPT. 10, 1987 - DATE OF ORIGINAL ISSUE
OCT. 21, 1992 - REVISED NOTES & TITLE BLOCK
AUG. 9, 1995 - REVISED NOTES & REMOVED GRANITE CURB.

APPROVED FOR THIS PROJECT AND/OR DESIGN IMPLEMENTATION. FHWA FINAL APPROVAL PENDING.

APPROVED

DIRECTOR OF ENGINEERING

TRAFFIC AND SAFETY ENGINEER

TYPICAL BRIDGE MOUNTING DETAILS FOR STREET LIGHT POLE

(FOR LUMINAIRE MOUNTING HEIGHTS ≤ 35 FEET)

/traf/std/std181.dgn/std181.1

VERMONT AGENCY OF TRANSPORTATION

STANDARD

E-181