CONCRETE BASE

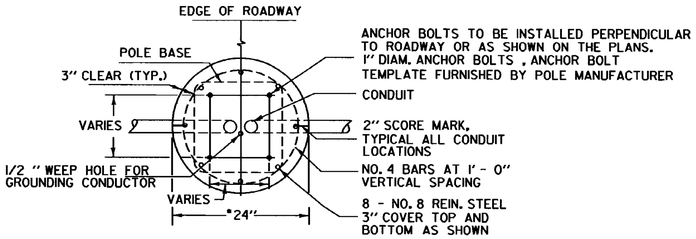

* USE 30" DIAM. WITH TRANSFORMER BASES, ARM OVER 8' LONG OR WHEN OTHERWISE NOTED.

PLAN VIEW

NOTE: SEE CHART AT RIGHT AND NOTE BELOW CHART FOR OTHER ANCHOR BOLT DIMENSIONS.

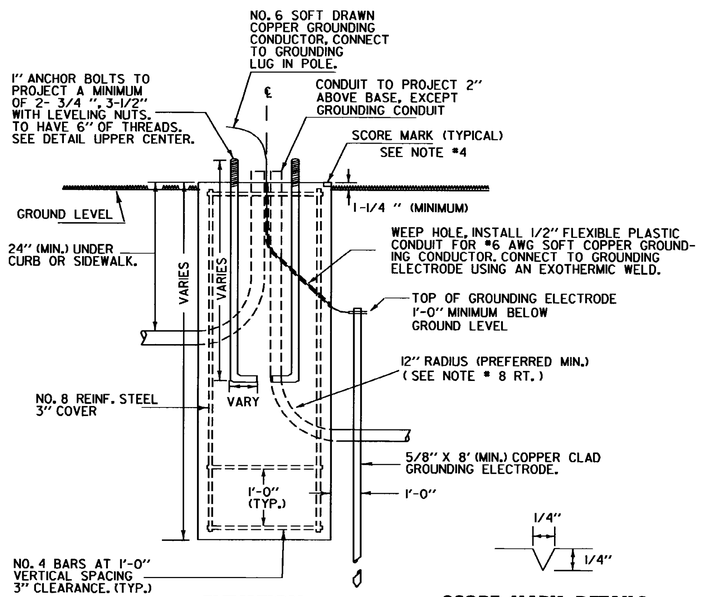

ELEVATION

SCORE MARK DETAILS

NOTES:

THERE ARE FOUR BASIC SIZES FOR CONCRETE BASES, 2 FEET X 4 FEET TO BE USED WITH POLE TOP MOUNTED LUMINAIRES WITH A MOUNTING HEIGHT OF LESS THAN 20 FEET. A CONCRETE BASE SIZE OF 2 FEET X 6 FEET FOR POLES WITH LESS THAN 40 FOOT MOUNTING HEIGHT AND ARMS UP TO 8 FEET IN LENGTH. THIRD, A BASE SIZE OF 2-1/2 FEET X 6 FEET FOR POLES WITH LESS THAN 40 FOOT MOUNTING HEIGHT AND ARMS LESS THAN 10 FEET IN LENGTH WHICH WILL BE INSTALLED ON A TRANSFORMER BASE. FORTH, A BASE SIZE 2-1/2 FEET X 8 FEET FOR A 40 FOOT OR GREATER MOUNTING HEIGHT, A 10 FOOT OR GREATER ARM LENGTH WITH OR WITHOUT TRANSFORMER BASE.

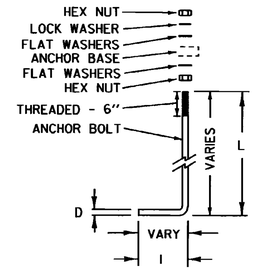

ALL ANCHOR BOLTS TO BE STAINLESS STEEL

DIMENSION TABLE									
MOUNTING HEIGHT	NO.OF ARMS	ANCHOR BASE				SLIP BASE			
		D	L	I	UNC	D	L	I	UNC
30	1	1	36	4	8	1-1/4	42	6	7
	2								
35	1	1	36	4	8	1-1/4	42	6	7
	2								
40	1	1	36	4	8	1-1/4	42	6	7
	2	1-1/4	42	6	7				

NOTE:

FOR MOUNTING HEIGHTS LESS THAN 30 FEET, USE THE ANCHOR BOLT DIMENSIONS AS RECOMMENDED BY THE POLE MANUFACTURER. LENGTH, HOOK, DIAMETER AND BOLT PROJECTION.

TOP VIEW OF

ANCHOR BASE

(NON-BREAKAWAY)

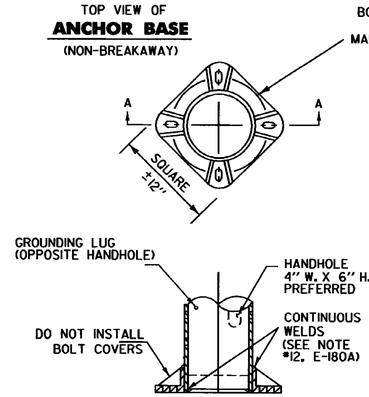

ANCHOR BASE

NOTES:

1) DIMENSIONS SHOWN FOR ANCHOR BASE AND TRANSFORMER BASE MAY VARY SLIGHTLY WITH DIFFERENT MANUFACTURERS.

2) ANCHOR BOLT TEMPLATE FURNISHED BY POLE MANUFACTURER.

VARIOUS BREAKAWAY OPTIONS

TYPE SHALL BE SPECIFIED ON PROJECT PLANS

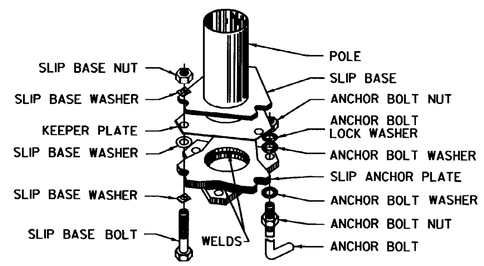

SLIP BASE ASSEMBLY

(BREAKAWAY)

TOP VIEW OF

TRANSFORMER BASE

(RECOMMENDED BREAKAWAY FEATURE)

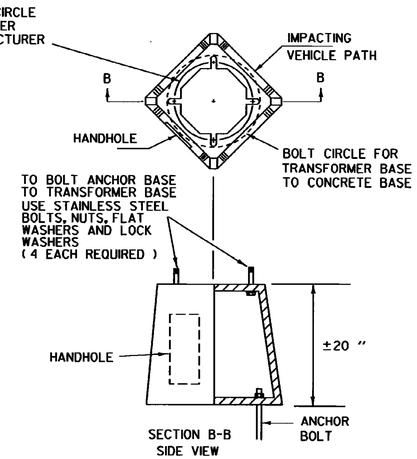

TRANSFORMER BASE

3) FOR BREAKAWAY DESIGN A TRANSFORMER BASE, BREAKAWAY COUPLINGS, SLIP BASE OR OTHER APPROVED METHOD SHALL BE INSTALLED BETWEEN THE ANCHOR BASE AND THE CONCRETE BASE.

CONCRETE BASE AND GENERAL NOTES

1. ALL CONCRETE BASES TO BE CONCRETE, CLASS B, AND SHALL HAVE A SMOOTH LEVEL TOP SURFACE FINISHED WITH A 1/2 INCH RADIUS EDGING TOOL.
2. ALL REINFORCING STEEL TO CONFORM TO THE REQUIREMENTS FOR ''REINFORCING STEEL.''
3. TEMPLATE FOR ANCHOR BOLTS, STAINLESS STEEL ANCHOR BOLTS, NUTS, AND WASHERS TO BE OBTAINED BY CONTRACTOR PRIOR TO CONSTRUCTION OF BASES.
4. SCORE TOP OF CONCRETE BASE TO SHOW LOCATION OF CONDUIT(S).
5. CONDUIT SIZE - AS SHOWN ON THE PLANS.
6. ALL EXPOSED METAL HARDWARE SHALL BE GALVANIZED OR STAINLESS STEEL.
7. IF THE ELECTRICAL CONDUIT IN THE CONCRETE BASE IS GALVANIZED STEEL, GROUNDING BUSHINGS SHALL BE USED.
8. THE MINIMUM RADIUS FOR RIGID METALLIC OR NON-METALLIC ELECTRICAL CONDUIT SHALL BE SIX TIMES THE INSIDE DIAMETER OF THE CONDUIT.
9. SEE STANDARD SHEET E-173 FOR PULL BOX DETAIL.
10. ANY BREAKAWAY FEATURE WHICH HAS BEEN APPROVED FOR USE ON FEDERAL AID HIGHWAY PROJECTS AND MEET THE 1985 "AASHTO" REQUIREMENT FOR A BREAKAWAY FEATURE MAY BE USED UNLESS A SPECIFIC TYPE IS STATED ON THE PLANS.

GUARDRAIL DEFLECTION CHART

PER AASHTO - ROADSIDE DESIGN GUIDE 1988

TYPE		GR POST SPACING	DEFLECTION
THREE CABLE	W/STEEL POSTS	16' - 0"	12'
	W/WOODEN POSTS	12' - 6"	12'
W-BEAM	W/WEAK POST	12' - 6"	7'
	W/STRONG POST	6' - 3"	3'
BOX BEAM		6' - 0"	5'
THRIE BEAM	W/WEAK POST	12' - 6"	4'
	W/STRONG POST	6' - 3"	2'

THIS CHART LISTS THE THEORETICAL DEFLECTION DISTANCE UPON IMPACT OF VARIOUS GUARDRAIL WITH DIFFERENT TYPES AND SPACINGS OF POSTS.

STAINLESS STEEL BREAKAWAY SUPPORT COUPLINGS

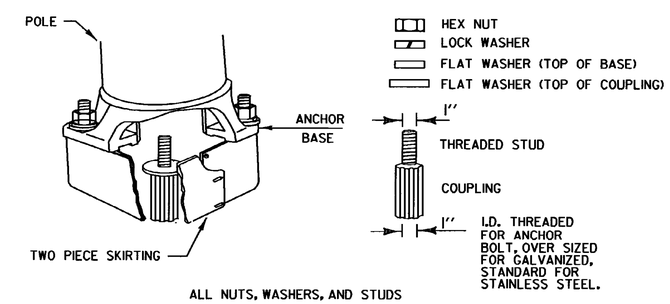

ALL NUTS, WASHERS, AND STUDS SHALL BE STAINLESS STEEL.

THIS SHEET NOT TO SCALE	OTHER STDS. REQUIRED	E-173, E-180A, E-181

REVISIONS AND CORRECTIONS

AUG. 9, 1995 - DATE OF ORIGINAL ISSUE

APPROVED FOR THIS PROJECT AND/OR DESIGN IMPLEMENTATION. FHWA FINAL APPROVAL PENDING.

APPROVED

DIRECTOR OF ENGINEERING

TRAFFIC AND SAFETY ENGINEER

STREET LIGHTING DETAILS

/traf/std/stdel80b.dgn/stdel80b.1

VERMONT AGENCY OF TRANSPORTATION

STANDARD

E-180B