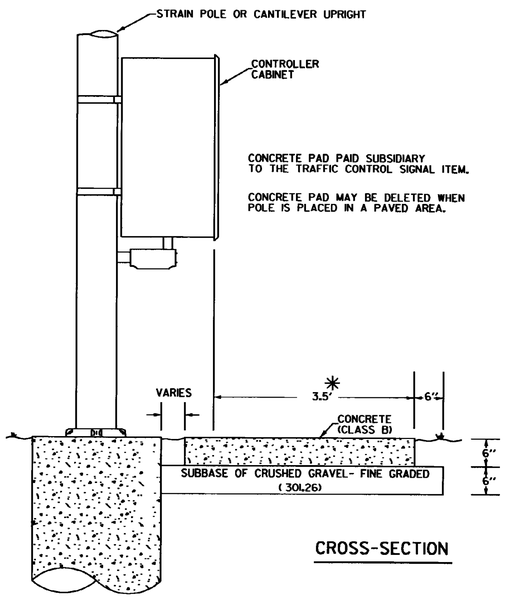

CROSS-SECTION

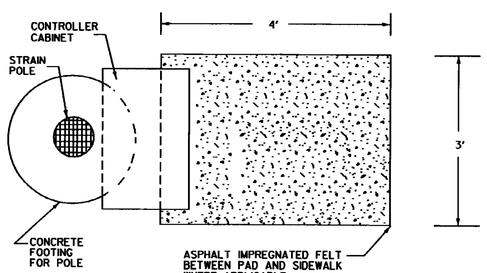

TOP VIEW

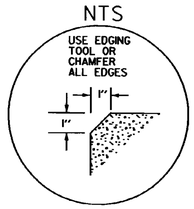

* THE 3.5 FOOT DIMENSION MAY BE ADJUSTED AS NECESSARY WHERE SIDEWALK OR ROADWAY IS ADJACENT TO CONTROLLER.

CONCRETE PAD DETAIL FOR POLE MOUNTED CONTROLLER CABINET

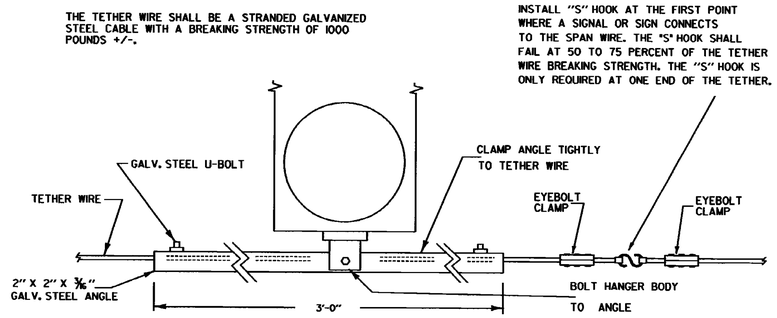

OPTICALLY PROGRAMMED SIGNAL HEAD WHEN MASKING IS REQUIRED

TETHER WIRE ATTACHMENT DETAILS

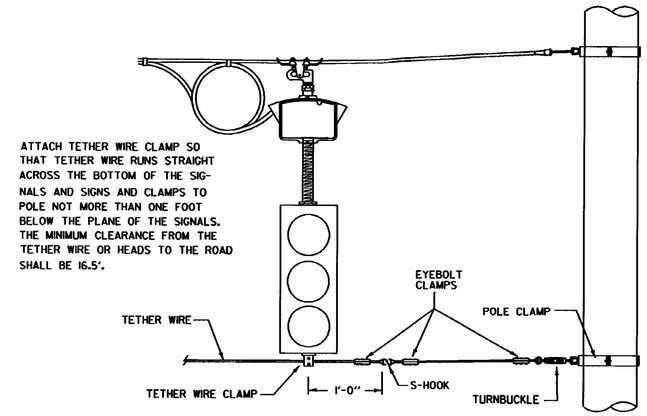

STANDARD OR UNMASKED OPTICALLY PROGRAMMED SIGNAL HEAD

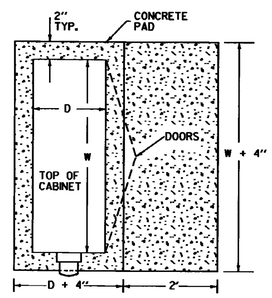

TOP VIEW

THE CABINET DIMENSIONS "D" AND "W" VARY WITH MANUFACTURER. A TYPICAL "P" CABINET HAS DIMENSIONS OF D = 26" AND W = 46".

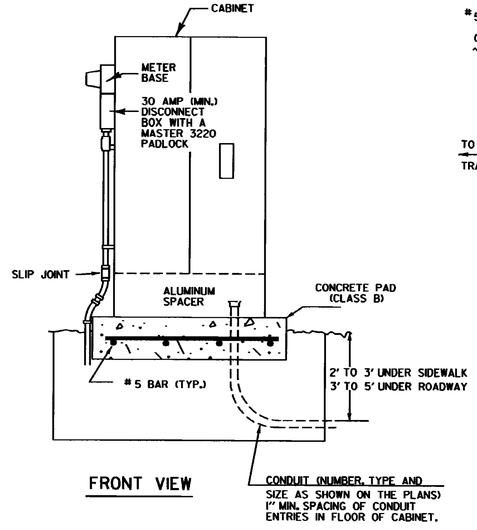

FRONT VIEW

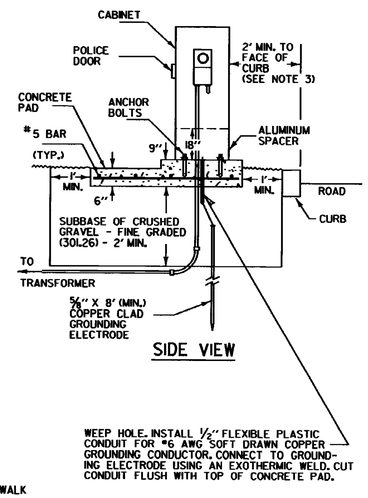

SIDE VIEW

GROUND MOUNTED CONTROLLER CABINET

SIGNAL HEAD AS INDICATED ON PLANS-PEDESTRIAN HEAD DRAWN ONLY AS REFERENCE

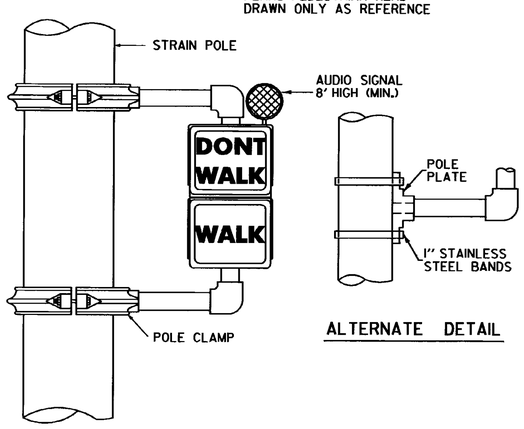

ALTERNATE DETAIL

DETAIL FOR POLE MOUNTING SIGNAL HEAD

NOTES:

1. THE CONCRETE PAD SURFACE SHALL HAVE A BRUSHED FINISH.
2. AN ASPHALT IMPREGNATED FELT PAD SHALL BE USED BETWEEN THE CONTROLLER PAD AND ADJACENT SIDEWALK, WHERE APPLICABLE.
3. THE MINIMUM CLEAR ZONE IN LOW SPEED URBAN AREAS IS 2' BEYOND THE FACE OF CURB. IN OTHER CASES, THE MINIMUM IS EQUAL TO THE CLEAR ZONE AS DEFINED IN AASHTO'S ROADSIDE DESIGN GUIDE.
4. THE CONRETE AND SUBBASE OF CRUSHED GRAVEL SHALL BE SUBSIDIARY TO THE TRAFFIC SIGNAL ITEM.
5. FOR GROUND MOUNTED CABINET INSTALLATIONS:
   A. THE METER SHOULD BE INSTALLED AS SHOWN ON THE PLANS. THE PREFERRED METER LOCATION IS ON A SEPARATE POLE OR STANCHION. HOWEVER, IF LIMITING CONDITIONS EXIST, THE METER MAY BE INSTALLED ON THE CONTROLLER CABINET ON THE SIDE AWAY FROM APPROACHING TRAFFIC.
   B. THE NUMBER 5 BARS SHALL BE SPACED 16" CENTER TO CENTER WITH A MINIMUM OF 3" COVER TO THE GROUND. THEY SHALL RUN BOTH NORMAL AND TRANSVERSE IN THE CONCRETE PAD.
   C. ANCHOR BOLT DIMENSIONS SHALL BE SUPPLIED BY THE CABINET MANUFACTURER. THESE BOLTS SHALL BE GALVANIZED OR STAINLESS STEEL.
   D. THE ALUMINUM SPACER MAY BE DELETED IN URBAN AREAS, IF SO NOTED ON THE PLANS.

OTHER STDS. REQUIRED E - 171A, E - 175

REVISIONS AND CORRECTIONS

JUNE 21, 1989 - DATE OF ORIGINAL ISSUE
MAY 14, 1990 - FHWA COMMENTS
NOV. 17, 1993 - FHWA COMMENTS, NOTE REVISIONS, MOVED CANTILEVER DETAILS TO NEW E-171C AND ADDED TETHER WIRE DETAIL
AUG. 9, 1995 - SPECIFIED MATERIAL UNDER PAD, REVISED NOTES AND MINOR CORRECTIONS

APPROVED FOR THIS PROJECT AND/OR DESIGN IMPLEMENTATION. FHWA FINAL APPROVAL PENDING.

APPROVED

Gordon S. MacArthur
DIRECTOR OF ENGINEERING

David A. Ross
TRAFFIC AND SAFETY ENGINEER

TRAFFIC CONTROL SIGNALS MISC. DETAILS

/traf/std/std171b.dgn - std171b.1

VERMONT AGENCY OF TRANSPORTATION

STANDARD E-171B