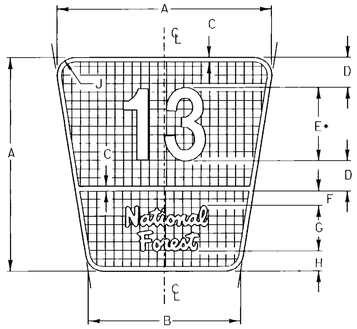

SIGN	DIMENSIONS (INCHES)								
	A	B	C	D	E	F	G	H	J
MIN.	18	12¾	½	2⅝	6D	1⅛	4	1⅝	2
STD.	24	17	½	3½	8D	1¾	5	2¼	2½
SPECIAL	36	25½	½	5¼	10D	2⅝	7½	3⅜	3¾

• OPTICALLY SPACE NUMERALS ABOUT VERTICAL CENTERLINE

1 OR 2 DIGIT ROUTE MARKERS

M1-7

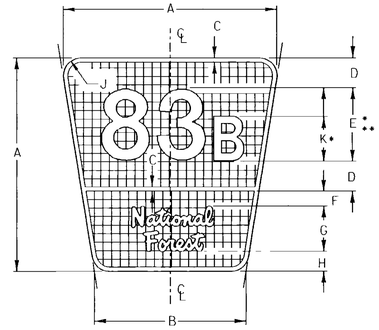

SIGN	DIMENSIONS (INCHES)									
	A	B	C	D	E	F	G	H	J	K
MIN.	18	12¾	½	2⅝	6D	1⅛	4	1⅝	2	4B
STD.	24	17	½	3½	8D	1¾	5	2¼	2½	5B
SPECIAL	36	25½	½	5¼	10D	2⅝	7½	3⅜	3¾	6B

•• Reduce spacing by 40%

1 OR 2 DIGIT ROUTE MARKERS

M1-7

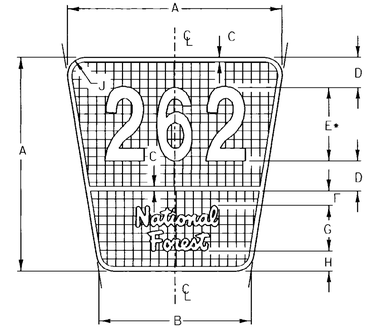

SIGN	DIMENSIONS (INCHES)								
	A	B	C	D	E	F	G	H	J
MIN.	18	12¾	½	2⅝	6B	1⅛	4	1⅝	2
STD.	24	17	½	3½	8B	1¾	5	2¼	2½
SPECIAL	36	25½	½	5¼	10B	2⅝	7½	3⅜	3¾

3 DIGIT ROUTE MARKERS

M1-7

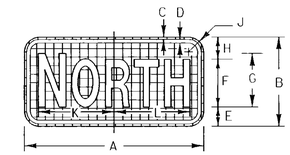

SIGN	DIMENSIONS (INCHES)									NORTH		SOUTH		EAST		WEST	
	A	B	C	D	E	F	G	H	J	K	L	K	L	K	L	K	L
MIN. & STD.	24	12	⅜	⅝	2¾	6C	7C	3¼	1½	10¼	10¼	10¼	9 13/16	7⅞	8⅜	8¾	8 13/16
SPECIAL	30	15	⅜	⅝	3¼	8C	9C	3¾	1½	12 11/16	12 11/16	12 11/16	12½	10⅜	11⅛	11⅝	11⅝

CARDINAL DIRECTION MARKER

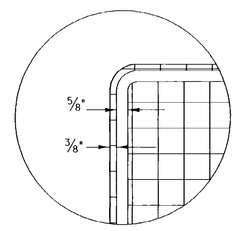

TYPICAL DETAIL FOR AUXILIARY SIGNS, CARDINAL DIRECTION MARKERS AND DIRECTION ARROWS

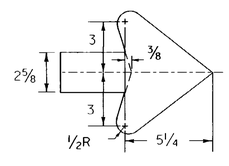

TYPICAL ARROW DETAIL

ALL DIMENSIONS IN INCHES

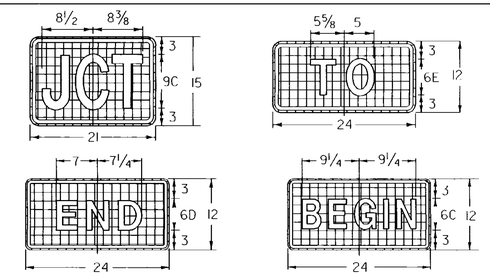

AUXILIARY SIGNS

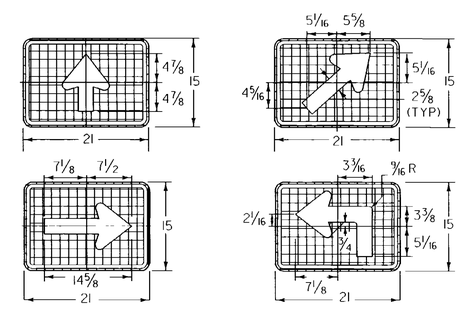

DIRECTION ARROW OR ADVANCE TURN ARROWS

MATERIALS

THE SIGN BASE MATERIAL MAY NOT BE ANY OF THE FOLLOWING, WITH THF MINMUM THICKNESS AS NOTED:

FLAT SHEET ALUMINUM

LESS THAN 24" X 24"	0.060"
WHEN USED ON GUIDE SIGNS	0.060"
24" X 24"	0.080"
36" X 36"	0.100"

GALVANIZED FLAT SHEET STEEL

LESS THAN 24" X 24"	18 GAGE
WHEN USED ON GUIDE SIGNS	18 GAGE
24" X 24"	16 GAGE
36" X 36"	14 GAGE

THE REFLECTORIZED MATERIAL SHALL BE BROWN REFLECTIVE SHEETING APPLIED TO THE ENTIRE BACKGROUND. THE TEXTS MAY BE LETTERING FILM, SILK SCREEN OR HAND PAINTED.

COLORS

NATIONAL FOREST ROUTE MARKERS SHALL HAVF RFFIECTIVE WHITE TEXT AND BORDERS ON REFLECTORIZED BROWN BACKGROUNDS. BROWN AREAS ARE INDICATED BY DOUBLE LINE CROSSHATCHING.

THE COLORS SHALL CONFORM WITH THOSE FOUND IN STANDARD COLOR TOLERANCE CHARTS AS APPROVED BY THE U.S. DEPARTMENT OF TRANSPORTATION, AND FEDERAL HIGHWAY ADMINISTRATION.

LETTERING

LETTERS AND DIGITS SHALL CONFORM WITH THE "STANDARD ALPHABET FOR HIGHWAY SIGNS AND PAVEMENT MARKINGS" ADOPTED BY THE U.S. DEPARTMENT OF TRANSPORTATION AND FHWA.

SPECIFICATIONS

NATIONAL FOREST ROUTE MARKERS AND AUXILARY ROUTE MARKERS SHALL MEET THE STANDARD STATE SPECIFICATIONS FOR TRAFFIC SIGNS.

DESIGNS

THE DESIGNS OF NATIONAL FOREST ROUTE MARKERS AND AUXILARY ROUTE MARKERS SHALL CONFORM WITH THE REQUIRMENTS SET FORTH IN THE "MANUAL ON UNIFORM TRAFFIC CONTROL DEVICES" ADOPTED BY THE U.S. DEPARTMENT OF TRANSPORTATION AND FHWA.

OTHER STDS. REQUIRED:

REVISIONS AND CORRECTIONS

AUG. 08, 1995 - DATE OF ORIGINAL ISSUE

APPROVED FOR THIS PROJECT AND/OR DESIGN IMPLEMENTATION. FHWA FINAL APPROVAL PENDING.

APPROVFD

Gordon S. MacArthur
DIRECTOR OF ENGINEERING

David A. Ross
TRAFFIC AND SAFETY ENGINEER

NATIONAL FOREST ROUTE MARKER SIGN DETAILS

/traf/std/stdel36d.dgn : stdexl36d.i

VERMONT AGENCY OF TRANSPORTATION

STANDARD

E-136 D