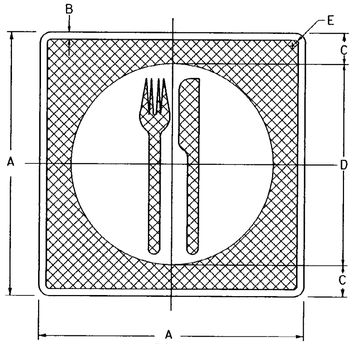

D9-8

SIGN	DIMENSIONS (INCHES)				
	A	B	C	D	E
MIN	18	1/2	1 1/2	15	1 1/2
STD	24	1/2	2	20	1 1/2
SPECIAL	30	3/4	2 1/2	25	1 7/8

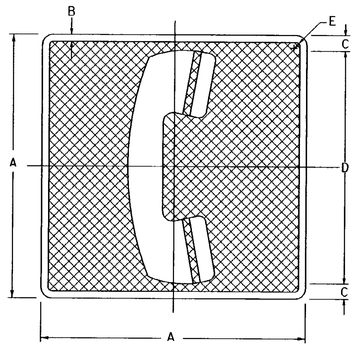

D9-1

SIGN	DIMENSIONS (INCHES)				
	A	B	C	D	E
MIN	18	1/2	1 1/2	15	1 1/2
STD	24	1/2	2	20	1 1/2
SPECIAL	30	3/4	2 1/2	25	1 7/8

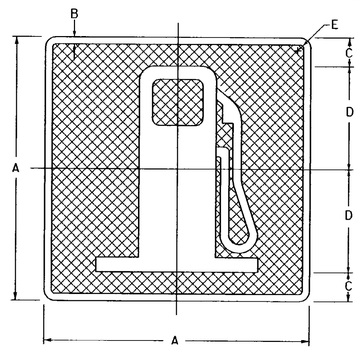

D9-7

SIGN	DIMENSIONS (INCHES)				
	A	B	C	D	E
MIN	18	1/2	3	6	1 1/2
STD	24	1/2	3	9	1 1/2
SPECIAL	30	3/4	3 3/4	11 1/4	1 7/8

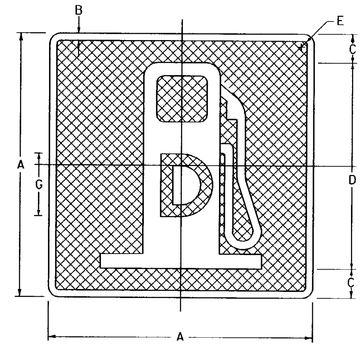

D9-11

SIGN	DIMENSIONS (INCHES)					
	A	B	C	D	E	G
MIN	18	1/2	1 1/2	15	1 1/2	4E(M)
STD	24	1/2	2	20	1 1/2	6E(M)
SPECIAL	30	3/4	2 1/2	25	1 7/8	8E(M)

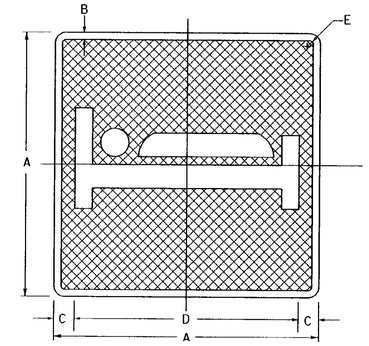

D9-9

SIGN	DIMENSIONS (INCHES)				
	A	B	C	D	E
MIN	18	1/2	1 1/2	15	1 1/2
STD	24	1/2	2	20	1 1/2
SPECIAL	30	3/4	2 1/2	25	1 7/8

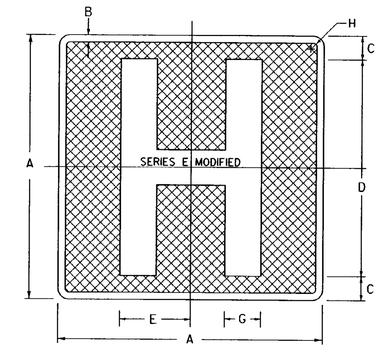

D9-2

SIGN	DIMENSIONS (INCHES)						
	A	B	C	D	E	G	H
MIN	18	1/2	1 1/2	15			1 1/2
STD	24	1/2	2	20	6 3/8	3 1/5	1 1/2
SPECIAL	30	3/4	2 1/2	25	8	4	1 7/8

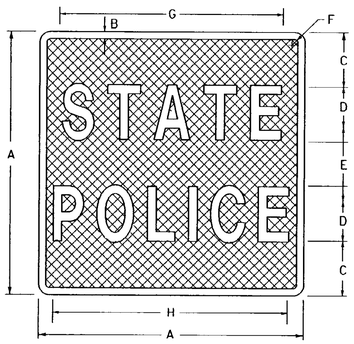

SIGN	DIMENSIONS (INCHES)							
	A	B	C	D	E	F	G	H
MIN AND STD	24	1/2	5	5C	4	1 1/2	14 9/16	18
SPECIAL	30	1/2	6	6C	6	1 1/2	18 3/4	22 7/16

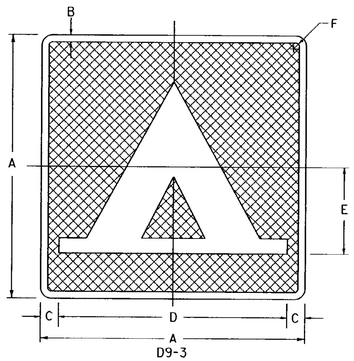

D9-3

SIGN	DIMENSIONS (INCHES)					
	A	B	C	D	E	F
MIN	18	1/2	1 1/2	15	6	1 1/2
STD	24	1/2	2	20	8	1 1/2
SPECIAL	30	3/4	2 1/2	25	10	1 7/8

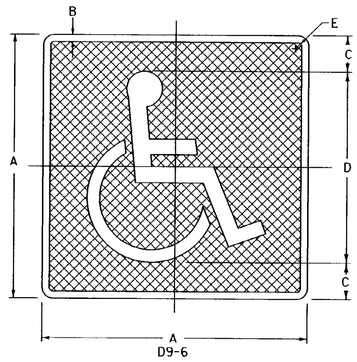

D9-6

SIGN	DIMENSIONS (INCHES)				
	A	B	C	D	E
MIN	18	1/2	1 1/2	15	1 1/2
STD	24	1/2	2	20	1 1/2
SPECIAL	30	3/4	2 1/2	25	1 7/8

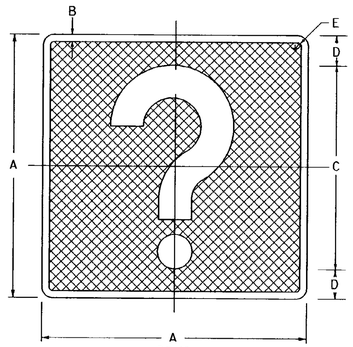

D9-10

SIGN	DIMENSIONS (INCHES)				
	A	B	C	D	E
MIN	18	1/2	1 1/2	15	1 1/2
STD	24	1/2	2	20	1 1/2
SPECIAL	30	3/4	2 1/2	25	1 7/8

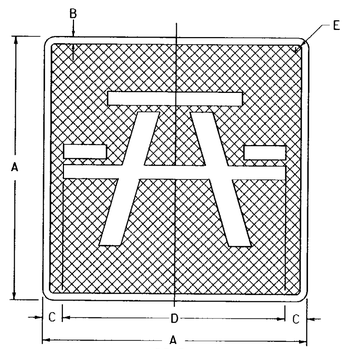

D5-5A

SIGN	DIMENSIONS (INCHES)				
	A	B	C	D	E
MIN	18	1/2	1 1/2	15	1 1/2
STD	24	1/2	2	20	1 1/2
SPECIAL	30	3/4	2 1/2	25	1 7/8

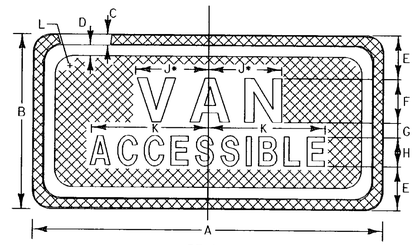

R7-8A

* INCREASE SPACING 50%

SIGN	DIMENSIONS (INCHES)										
	A	B	C	D	E	F	G	H	J	K	L
STD	12	6	3/8	3/8	1 1/2	1 1/2D	1/2	1D	2 1/4	4	1 1/2
SPECIAL	18	9	3/8	5/8	2 1/4	2D	1	1 1/2D	2 3/4	7	1 1/2

NOTE :
ALL DIMENSIONS SHOWN IN INCHES

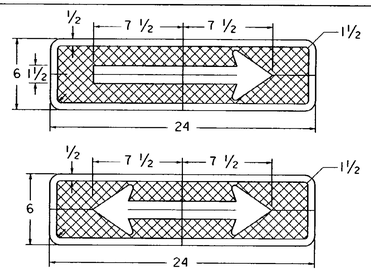

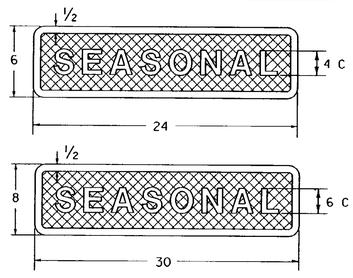

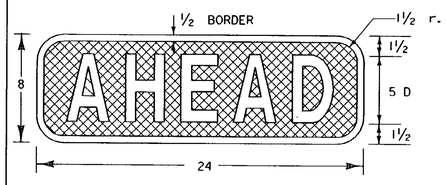

NOTES

MATERIALS

THE SIGN BASE MATERIAL USED FOR THE GUIDE SIGNS SHOWN ON THIS SHEET MAY BE ANY OF THE FOLLOWING MINIMUM THICKNESSES NOTED.

A - FLAT SHEET ALUMINUM - 0.060
B - HIGH DENSITY OVERLAID PLYWOOD -1/2"
C - GALVANIZED FLAT SHEET STEEL - 16 GA.

COLORS

THE SIGNS SHALL BE WHITE OR SILVER REFLECTORIZED SHEETING WITH A REVERSE SCREENED BLUE BACKGROUND. THE BLUE SHALL CONFORM WITH THE STANDARD COLORS ADOPTED BY THE AMERICAN ASSOCIATION OF STATE HIGHWAY OFFICIALS AND APPROVED BY THE U.S. DEPT. OF TRANSPORTATION, FEDERAL HIGHWAY ADIMINISTRATION.

LETTERING

LETTERS SHALL CONFORM WITH THE REQUIREMENTS FOUND IN THE PUBLICATION "STANDARD ALPHABETS FOR HIGHWAY SIGNS AND PAVEMENT MARKINGS" PRINTED BY THE FEDERAL HIGHWAY ADMINISTRATION.

DESIGN

THE DESIGN OF THESE SIGNS SHALL CONFORM WITH THE DETAILS SET FORTH IN THE MANUAL "STANDARD HIGHWAY SIGNS" AS SPECIFIED IN "THE MANUAL ON UNIFORM TRAFFIC CONTROL DEVICES." LETTER-NUMERAL DESIGNATION UNDER EACH SYMBOL IS IDENTIFICATION IN MANUAL.

SPECIFICATIONS

THESE SIGNS SHALL MEET THE STANDARD STATE SPECIFICATIONS FOR "TRAFFIC SIGNS."

OTHER STDS. REQUIRED:

REVISIONS AND CORRECTIONS

SEPT. 10, 1987 - DATE OF ORIGINAL ISSUE
DEC. 18, 1989 - DELETED SERVICE MOUNTING DETAIL
REVISED "STATE POLICE" SIGN
ADDED "AHEAD" SIGN
AUG. 18, 1995 - SIGN DETAIL REVISIONS PER STANDARD HIGHWAY SIGNS MANUAL

APPROVED FOR THIS PROJECT AND/OR DESIGN IMPLEMENTATION. FHWA FINAL APPROVAL PENDING.

APPROVED

DIRECTOR OF ENGINEERING

TRAFFIC AND SAFETY ENGINEER

GENERAL MOTORIST SERVICES SIGN DETAILS

/traf/std/stdel32.dgn : stdel32.i

VERMONT AGENCY OF TRANSPORTATION

STANDARD
E-132