REINFORCED CONCRETE DROP INLET WITH GRATE (BOTTOM SECTION)

ANY OF THE COMBINATIONS OF TOPS, CURBS AND GRATES FOUND ON SHEETS D-6, D-9, D-10, D-11, D-15 AND D-16 CAN BE ADAPTED FOR USE WITH THIS STRUCTURE.

MINIMUM DEPTH FOR

15″ 3′-6″
18″ 3′-6″
24″ 4′-0″

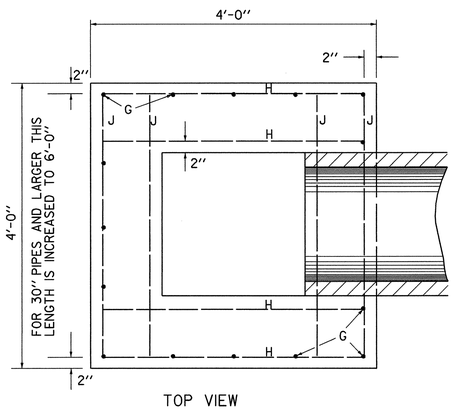

TOP VIEW

STEEL SCHEDULE FOR DROP INLET (BOTTOM SECTION ONLY)												
DEPTH	12″ TO 24″ DIAMETER 4′ x 4′ D.I.						30″ DIAMETER 4′ x 6′ D.I.					
	NO. J	LENGTH	NO. H	LENGTH	NO. G	LENGTH	NO. J	LENGTH	NO. H	LENGTH	NO. G	LENGTH
3′-0″	12	3′-8″	13	3′-8″	15	2′-8″						
3′-6″	12	3′-8″	13	3′-8″	15	3′-2″						
4′-0″	14	3′-8″	15	3′-8″	15	3′-8″						
4′-6″	14	3′-8″	15	3′-8″	15	4′-2″	12	5′-8″	17	3′-8″	17	4′-2″
5′-0″	16	3′-8″	17	3′-8″	15	4′-8″	14	5′-8″	19	3′-8″	17	4′-8″
5′-6″	16	3′-8″	17	3′-8″	15	5′-2″	14	5′-8″	19	3′-8″	17	5′-2″
6′-0″	18	3′-8″	19	3′-8″	15	5′-8″	16	5′-8″	21	3′-8″	17	5′-8″

DEPTH	36″ DIAMETER 4′ x 6′ D.I.					
	NO. J	LENGTH	NO. H	LENGTH	NO. G	LENGTH
5′-0″	14	5′-8″	19	3′-8″	17	4′-8″
5′-6″	14	5′-8″	19	3′-8″	17	5′-2″
6′-0″	16	5′-8″	21	3′-8″	17	5′-8″

CONCRETE AND STEEL QUANTITIES FOR DROP INLETS (BOTTOM SECTION ONLY)						
DEPTH	12″-24″ DIA.		30″ DIA.		36″ DIA.	
	CONC BY C.Y.	STEEL	CONC BY C.Y.	STEEL	CONC BY C.Y.	STEEL
3′-0″	1.73	138				
3′-6″	1.95	145				
4′-0″	2.17	168				
4′-6″	2.40	176	3.08	210		
5′-0″	2.62	199	3.37	238	3.29	238
5′-6″	2.84	207	3.67	247	3.59	247
6′-0″	3.06	230	3.97	276	3.89	276

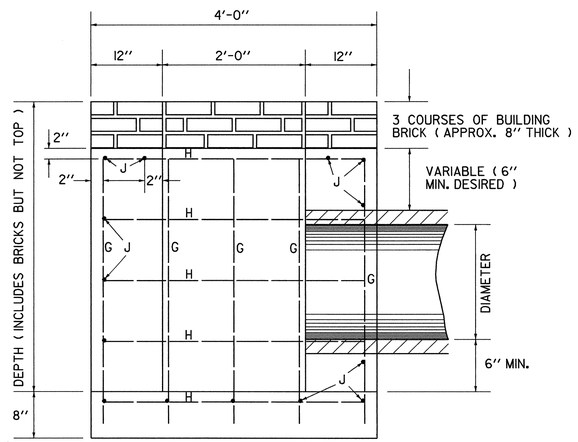

ALL STEEL TO HAVE 2″ MIN. COVER

LENGTH OF ″G″ BARS TO BE DEPTH MINUS 4″

SIDE VIEW

1. TO FIND VOLUME OF CONCRETE FOR THE ENTIRE STRUCTURE, ADD THE VOLUME FOR THE TOP USED, TO THE VOLUME IN THIS TABLE. FOR VOLUME IN TOP, SEE SHEETS D-9, D-10.

2. ALL REINFORCING STEEL TO BE NO. 5 O DEFORMED BARS, EVENLY SPACED WITH A MAXIMUM SPACING OF 12″ CENTER TO CENTER.

3. DROP INLET TO BE CONSTRUCTED IN ACCORDANCE WITH STRUCTURAL CONCRETE, SECTION 501.

4. FURNISHING AND LAYING OF BRICKS FOR ADJUSTING ELEVATION OF GRATE, SHALL BE INCLUDED IN UNIT BID PRICE FOR CONCRETE, CLASS B AND THEIR VOLUME TO BE INCLUDED IN THE FINAL QUANTITIES.

5. MORTAR, TYPE II, TO BE USED FOR JOINT FILLER AND LAYING OF BRICK.

6. FOR PIPES OF 30″ OR MORE IN DIAMETER, ALLOWANCE SHALL BE MADE FOR THE OPENING IN COMPUTING CONCRETE VOLUMES. THIS DEDUCTION WILL BE BASED ON THE RATED DIAMETER OF THE PIPE USED, WITH THE SAME DEDUCTION FOR CONCRETE AND METAL PIPE.

REINFORCED CONCRETE DROP INLET WITH PRECAST COVER

DROP INLET AND COVER TO BE CONSTRUCTED IN ACCORDANCE WITH STRUCTURAL CONCRETE, SECTION 501

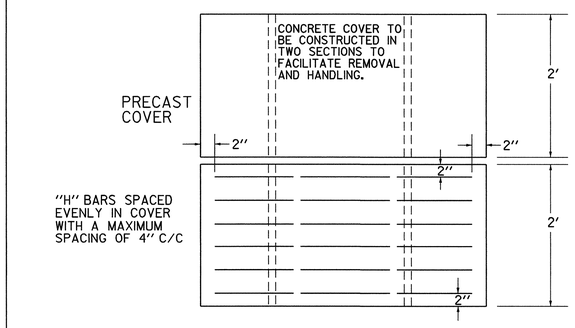

STEEL SCHEDULE FOR DROP INLETS WITH PRECAST COVERS												
DEPTH	12″ TO 24″ DIAMETER				30″ DIAMETER							
	G	LENGTH	H-J	LENGTH	G	LENGTH	J	LENGTH	H	LENGTH		
2′-0″	15	2′-4″	31	3′-8″								
2′-6″	15	2′-10″	33	3′-8″								
3′-0″	15	3′-4″	36	3′-8″								
3′-6″	15	3′-10″	36	3′-8″	16	3′-10″	12	4′-2″	23	3′-8″		
4′-0″	15	4′-4″	39	3′-8″	16	4′-4″	14	4′-2″	23	3′-8″		
4′-6″	15	4′-10″	39	3′-8″	16	4′-10″	14	4′-2″	25	3′-8″		
5′-0″	15	5′-4″	42	3′-8″	16	5′-4″	16	4′-2″	25	3′-8″		
5′-6″	15	5′-10″	42	3′-8″	16	5′-10″	16	4′-2″	27	3′-8″		
6′-0″	15	6′-4″	45	3′-8″	16	6′-4″	18	4′-2″	27	3′-8″		

DEPTH	36″ DIAMETER					
	G	LENGTH	J	LENGTH	H	LENGTH
4′-0″	16	4′-4″	14	4′-8″	28	3′-8″
4′-6″	16	4′-10″	14	4′-8″	28	3′-8″
5′-0″	16	5′-4″	16	4′-8″	30	3′-8″
5′-6″	16	5′-10″	16	4′-8″	30	3′-8″
6′-0″	16	6′-4″	18	4′-8″	32	3′-8″

NOTE: SPACING OF BARS WILL VARY SLIGHTLY WITH SIZE OF PIPE USED.

CUT ″G″ BARS IN THROAT AREA TO ELEVATION AT BOTTOM OF BRICKS

TOP VIEW

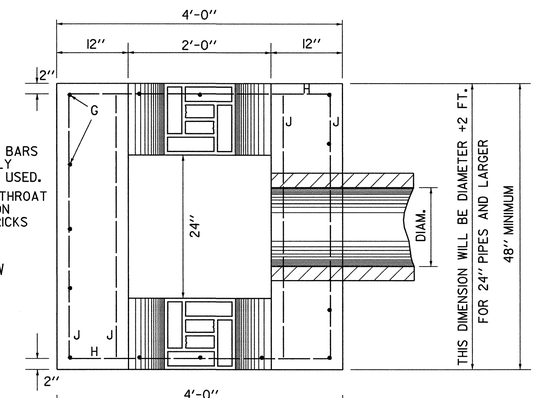

CONCRETE AND STEEL QUANTITIES FOR DROP INLETS OF VARIOUS DEPTHS								
DROP INLETS WITH PRECAST COVERS								
DEPTH	12″ 15″ 18″		24″		30″		36″	
	CONC BY C.Y.	STEEL LBS	CONC BY C.Y.	STEEL LBS.	CONC BY C.Y.	STEEL LBS	CONC BY C.Y.	STEEL LBS.
2′-0″	1.4	155						
2′-6″	1.6	171	1.6	171				
3′-0″	1.8	190	1.8	190				
3′-6″	2.0	198	2.0	198	2.1	204		
4′-0″	2.3	217	2.3	217	2.3	221	2.5	248
4′-6″	2.5	225	2.5	225	2.6	237	2.7	256
5′-0″	2.7	244	2.7	244	2.8	254	3.0	282
5′-6″	2.9	252	2.9	252	3.0	270	3.2	290
6′-0″	3.2	271	3.2	271	3.3	287	3.5	316

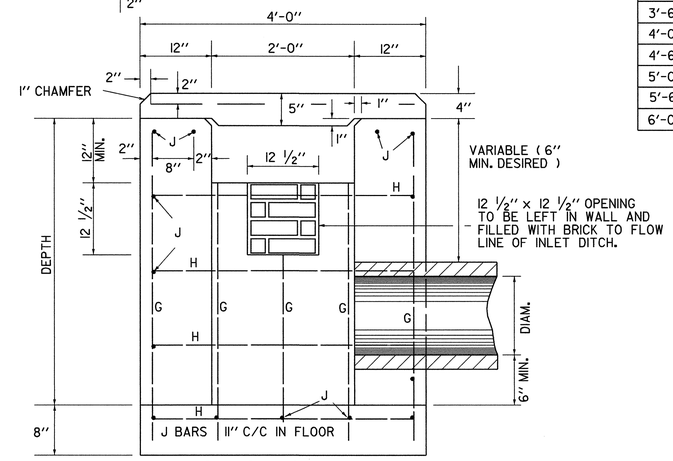

ALL REINFORCING STEEL TO HAVE 2″ MIN. COVER EXCEPT IN COVER

SIDE VIEW

REVISIONS AND CORRECTIONS

DEC. 6, 1971 - ORIGINAL APPROVAL

JUNE 1, 1994 - REISSUED, WITHOUT CHANGE, UNDER NEW SIGNATURES.

JAN. 3, 2000 - CORRECTED TITLE AND MINOR EDITORIAL CHANGES

APPROVED

DIRECTOR OF PROJECT DEVELOPMENT

ROADWAY AND TRAFFIC DESIGN ENGINEER

REINFORCED CONCRETE DROP INLET WITH PRECAST COVER

REINFORCED CONCRETE DROP INLET WITH GRATE (BOTTOM SECTION)

VERMONT AGENCY OF TRANSPORTATION

STANDARD

D-8