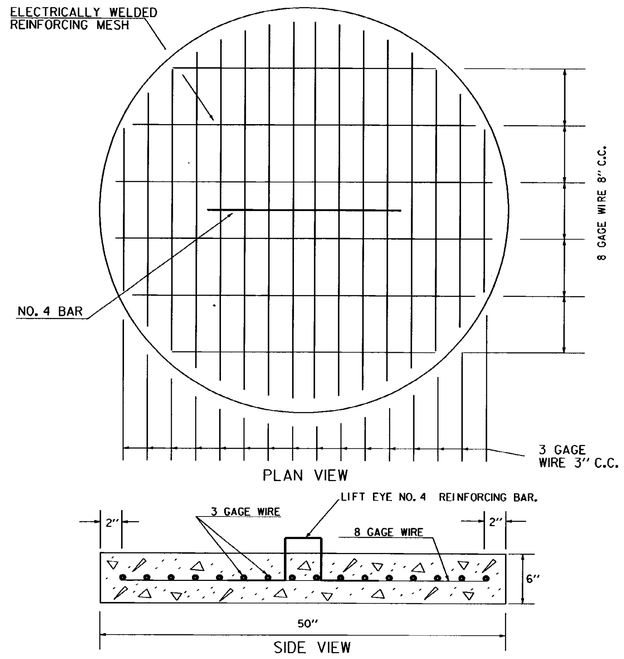

PRECAST REINFORCED CONCRETE BASE

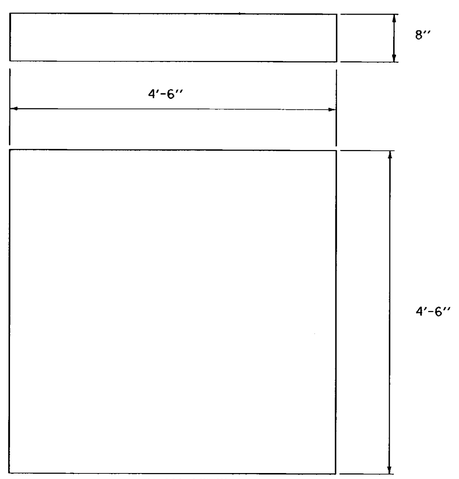

DROP INLET PIPE BASE CAST IN PLACE
(CONCRETE CONFORMING TO STRUCTURAL CONCRETE CLASS B)

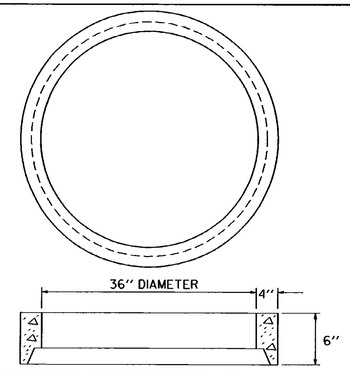

PRECAST REINFORCED CONCRETE PIPE RISER

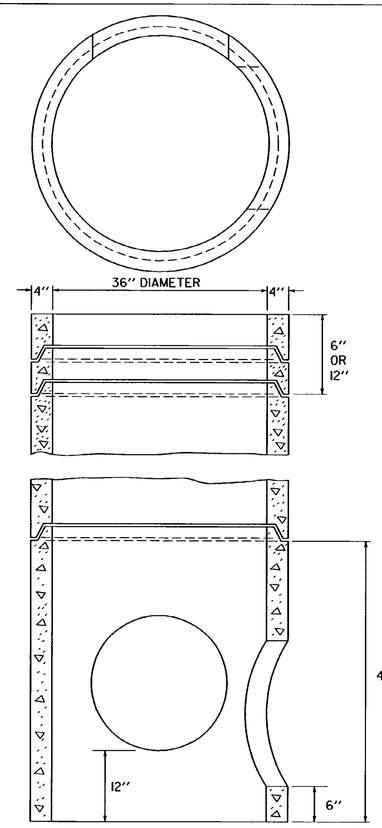

PIPE SECTIONS FOR DROP INLETS

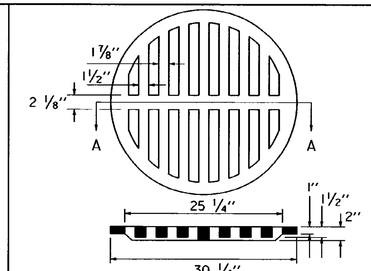

SECTION A-A
CAST IRON GRATE

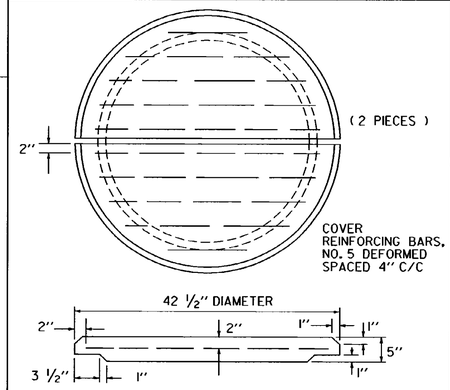

PRECAST REINFORCED CONCRETE COVER

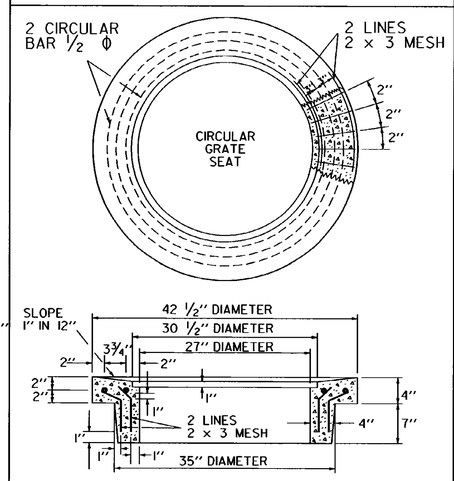

PRECAST REINFORCED CONCRETE RING FOR GRATE

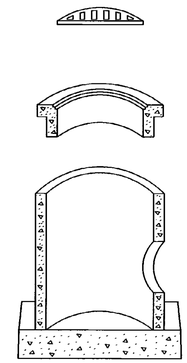

PRECAST REINFORCED CONCRETE PIPE DROP INLET WITH CAST IRON GRATE

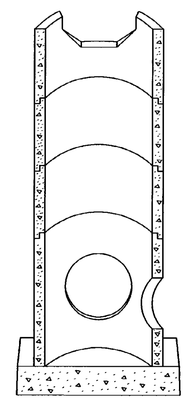

PRECAST REINFORCED CONCRETE PIPE DROP INLET WITH THROATED RISER

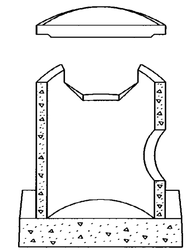

PRECAST REINFORCED CONCRETE PIPE DROP INLET WITH CONCRETE COVER

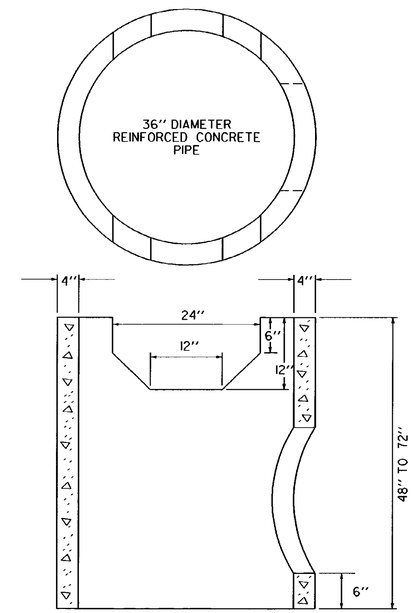

PRECAST REINFORCED CONCRETE PIPE DROP INLET WITH THROAT

NOTE :
THESE DROP INLETS SHOULD NOT BE USED IN AREAS OF VEHICULAR TRAFFIC OR IN BENCHES ON CUT SLOPES

REVISIONS AND CORRECTIONS

DEC. 6, 1971 - ORIGINAL APPROVAL DATE
JUNE 1, 1994 - REISSUED, WITHOUT CHANGE, UNDER NEW SIGNATURES.

APPROVED

APPROVED FOR THIS PROJECT AND/OR DESIGN IMPLEMENTATION. FHWA FINAL APPROVAL PENDING.

Gordon S. MacCallum, P.E.
DIRECTOR OF ENGINEERING

Robert M. Murphy, P.E.
DESIGN ENGINEER

PRECAST REINFORCED CONCRETE PIPE DROP INLET WITH CAST IRON GRATE

PRECAST REINFORCED CONCRETE PIPE DROP INLET WITH CONCRETE COVER

VERMONT AGENCY OF TRANSPORTATION

STANDARD
D-1