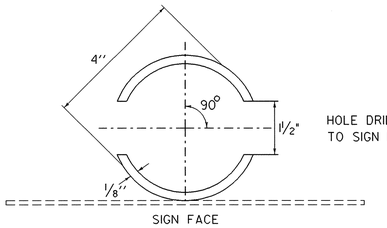

HOLE DRILLED PARALLEL TO SIGN FACE

SECTION A-A

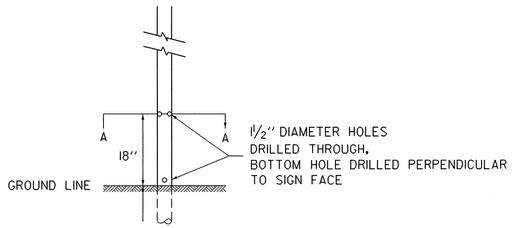

DETAIL A

4'' DIAMETER POST
(MODIFIED)

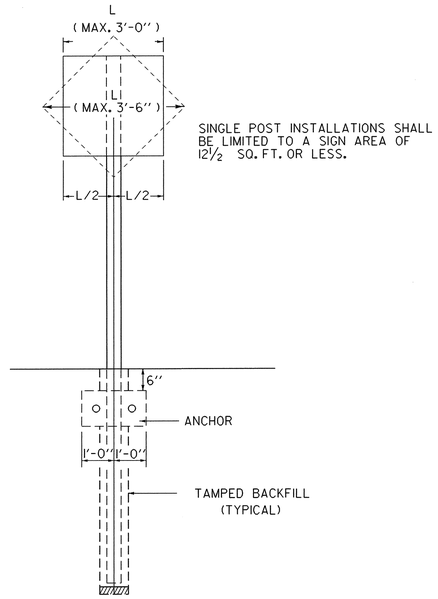

SINGLE POST INSTALLATIONS SHALL BE LIMITED TO A SIGN AREA OF 12½ SQ. FT. OR LESS.

* WHEN CONSTRUCTING MULTIPLE POST INSTALLATIONS, THE POST SPACING SHALL BE A MINIMUM OF 7' - 4'' CENTER TO CENTER OF THE POSTS UNLESS USED BEHIND GUARD-RAIL A DISTANCE ≥ THE DEFLECTION DISTANCE (SEE STD. E-160).

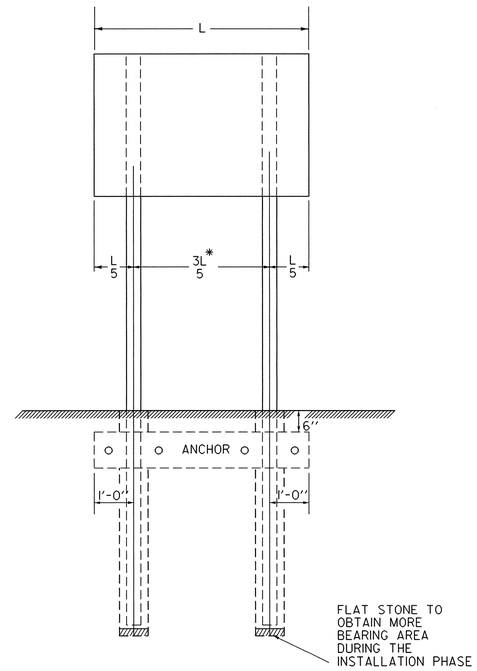

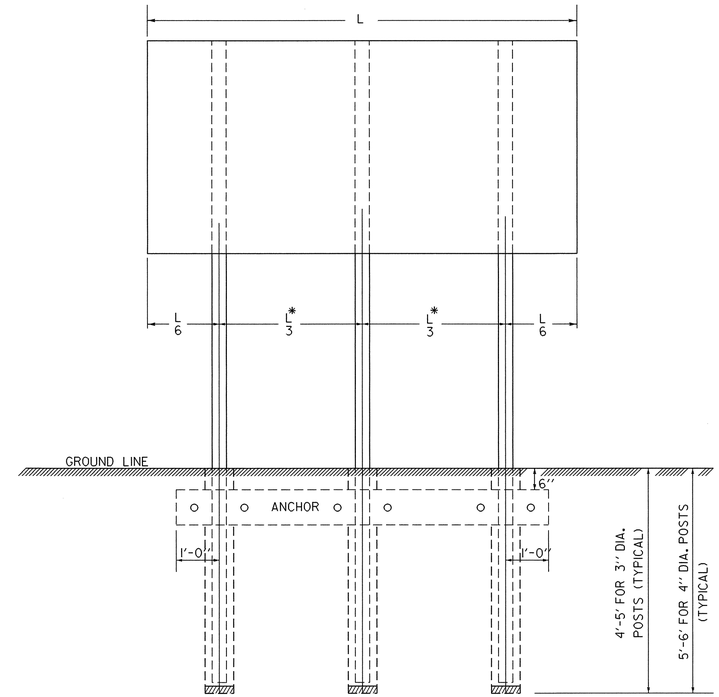

IN AREAS WHERE LEDGE ROCK IS ENCOUNTERED POSTS WILL BE SET AND GROUTED WITH TYPE 4 MORTAR, 24'' BELOW THE TOP SURFACE OF THE SOLID ROCK UNLESS THE POSTS PENETRATE THE GROUND A MIN. 4'.

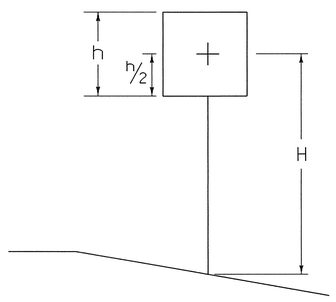

POST SELECTION CHART

SIGN AREA (FT.^{2}) x H(FT.) ≤ SV (SELECTION VALUE)		
POST SIZE	Sv (FT.^{3})	DESIGN CRITERIA
3'' DIA.	156	WIND VELOCITY = 60 MPH (10 YEAR MEAN RECURRENCE INTERVAL) WIND PRESSURE = 14 PSF ALUMINUM Fy = 24,000 PSI ALLOWABLE STRESS = 1.4 (24,000) PSI
4'' DIA. *	286	
4'' DIA. (MOD) *	282	

* TWO POST INSTALLATIONS - USE ONLY BEHIND GUARDRAIL AT A DISTANCE ≥ THE GUARDRAIL DEFLECTION DISTANCE. (SEE STD. E-160)

POST WEIGHTS

POST DIAMETER	WALL THICKNESS	WEIGHT PER FT.
3'' ROUND	1/8''	1.3 LBS
4'' ROUND	1/8''	1.7 LBS
4'' ROUND (MOD.)	1/8''	1.7 LBS

NOTES

ANCHORS USE TWO (2) PIECES OF 2'' x 12'' ROUGH PLANK. PLANKS, UNLESS OTHERWISE NOTED, SHALL CONFORM TO '' STANDARD SPECIFICATIONS FOR CONSTRUCTION '' SECTION 728.02

ERECTION LOCKNUTS ON 3/8'' # 16 ALUMINUM POST BOLT CLIPS SHALL BE TORQUED TO 225 INCH POUNDS USING DRY, CLEAN, UNLUBRICATED THREADS. WHERE ALUMINUM SURFACES ARE TO BE PLACED IN CONTACT WITH WOOD, THEY SHALL BE GIVEN A THICK COAT OF AN ALKALI-RESISTANT BITUMINOUS PAINT MEETING THE REQUIREMENTS OF MILITARY SPECIFICATION MIL-P-6883, WHICH SHALL BE DRY BEFORE INSTALLATION.

THE HOLE SHALL BE CAREFULLY DUG AND THE POST SET TO THE DEPTH SPECIFIED ABOVE. POST SHALL NOT BE DRIVEN. THE BACKFILL MATERIAL SHALL CONFORM TO THE REQUIREMENTS OF APPROVED GRAVEL OR SHALL BE A MATERIAL APPROVED BY THE ENGINEER. COMPACTION OF THE BACKFILL WILL BE PERFORMED AS DIRECTED BY THE ENGINEER.

OTHER STDS. REQUIRED: E-160

REVISIONS AND CORRECTIONS

SEPT. 10, 1987 - DATE OF ORIGINAL ISSUE
MAR. 11, 1988 - FHWA REVIEW COMMENTS
AUG. 18, 1995 - REVISED POST WALL THICKNESS AND APPROPRIATE VALUES. ADDED 4'' DIAMETER (MOD.) POST.
MAR. 11, 1996 - REVISED POST SELECTION CHART
MAY 20, 1999 - ORIGINAL LOST NEEDED NEW SIGNATURE

APPROVED

DIRECTOR OF PROJECT DEVELOPMENT

TUBULAR ALUMINUM SIGN POST

/traf/std/stdel62.dgn : stdel62.i

VERMONT AGENCY OF TRANSPORTATION

STANDARD E-162