STRUCTURE INSPECTION, INVENTORY and APPRAISAL SHEET

Vermont Agency of Transportation ~ Structures Section ~ Bridge Management and Inspection Unit

Inspection Report for : BOLTON *Bridge No.:* 00007 *District:* 5
Located on: C3014 *over* MILL BROOK *approximately* 0.1 MI TO JCT W CL2 TH3 *Owner:* TOWN-OWNED

CONDITION

Deck Rating: 7 GOOD
Superstructure Rating: 5 FAIR
Substructure Rating: 7 GOOD
Channel Rating: 8 VERY GOOD
Culvert Rating: N NOT APPLICABLE
Federal Str. Number: 100401000704011
Federal Sufficiency Rating: 50.8
Deficiency Status of Structure: FD

AGE and SERVICE

Year Built: 1919 *Year Reconstructed:* 0000
Service On: 1 HIGHWAY
Service Under: 5 WATERWAY
Lanes On the Structure: 01
Lanes Under the Structure: 00
Bypass, Detour Length (miles): 99
ADT: 000010 *% Truck ADT:* 02
Year of ADT: 2007

GEOMETRIC DATA

Length of Maximum Span (ft): 0035
Structure Length (ft): 000037
Lt Curb/Sidewalk Width (ft): 0
Rt Curb/Sidewalk Width (ft): 0
Bridge Rdwy Width Curb-to-Curb (ft): 10.3
Deck Width Out-to-Out (ft): 12
Appr. Roadway Width (ft): 011
Skew: 05
Bridge Median: 0 NO MEDIAN
Min Vertical Clr Over (ft): 99 FT 99 IN
Feature Under: FEATURE NOT A HIGHWAY OR RAILROAD
Min Vertical Underclr (ft): 00 FT 00 IN

STRUCTURE TYPE and MATERIALS

Bridge Type: ROLLED BM W TMBR DK
Number of Approach Spans: 0000 *Number of Main Spans:* 001
Kind of Material and/or Design: 3 STEEL
Deck Structure Type: 8 TIMBER
Type of Wearing Surface: 7 WOOD OR TIMBER
Type of Membrane: 0 NONE
Deck Protection: 7 CCA.CREOSOTED WOOD

APPRAISAL *AS COMPARED TO FEDERAL STANDARDS

Bridge Railings: 0 DOES NOT MEET CURRENT STANDARD
Transitions: 0 DOES NOT MEET CURRENT STANDARD
Approach Guardrail: 1 MEETS CURRENT STANDARD
Approach Guardrail Ends: 1 MEETS CURRENT STANDARD
Structural Evaluation: 5 BETTER THAN MINIMUM TOLERABLE
Deck Geometry: 2 INTOLERABLE REPLACEMENT NEEDED
Underclearances Vertical and Horizontal: N NOT APPLICABLE
Waterway Adequacy: 7 SLIGHT CHANCE OF OVERTOPPING BRIDGE & ROADWAY
Approach Roadway Alignment: 8 EQUAL TO DESIRABLE CRITERIA
Scour Critical Bridges: 8 STABLE FOR SCOUR

DESIGN VEHICLE, RATING and POSTING

Load Rating Method (Inv): 2 ALLOWABLE STRESS(AS)
Posting Status: A OPEN, NO RESTRICTION
Bridge Posting: 5 NO POSTING REQUIRED
Load Posting: 10 NO LOAD POSTING SIGNS ARE NEEDED
Posted Vehicle: POSTING NOT REQUIRED
Posted Weight (tons):
Design Load: 0 OTHER OR UNKNOWN

INSPECTION

Insp. Date: 092015 *Insp. Freq. (months):* 24 *X-Ref. Route:* *X-Ref. BrNum:*

INSPECTION SUMMARY and NEEDS

9/1/2015 Structure is in fair to good condition. Damaged interior beams should be replaced in the near future. Dam on the upstream side should be removed. Beams should be cleaned and painted soon. ~FRE/TJB

9/17/2013 Interior beams should be replaced with beams the same size as the fascia beams. All beam should be cleaned and painted. Dam on the upstream side should be remove. ~FRE/SJH

8/8/2011 The structure is in fair to good condition. The interior beams bow at midspan which may have been caused by over loads and should be replaced in the near future. The home made gravel and stone dam should be removed on the upstream side. ~ DCP/FRE

STRUCTURE INSPECTION, INVENTORY and APPRAISAL SHEET

Vermont Agency of Transportation ~ Structures Section ~ Bridge Management and Inspection Unit

Inspection Report for BOLTON | *bridge no.: 00007* | *District: 5*

Located on: C3014 over MILL BROOK | *approximately 0.1 MI TO JCT W CL2 TH3* | *Owner: 03 TOWN-OWNED*

CONDITION

Deck Rating: 7 GOOD

Superstructure Rating: 5 FAIR

Substructure Rating: 7 GOOD

Channel Rating: 8 VERY GOOD

Culvert Rating: N NOT APPLICABLE

Federal Str. Number: 100401000704011

Federal Sufficiency Rating: 050.8

Deficiency Status of Structure: FD

AGE and SERVICE

Year Built: 1919 Year Reconstructed: 0000

Service On: 1 HIGHWAY

Service Under: 5 WATERWAY

Lanes On the Structure: 01

Lanes Under the Structure: 00

Bypass, Detour Length (miles): 99

ADT: 000010 % Truck ADT: 02

Year of ADT: 2007

GEOMETRIC DATA

Length of Maximum Span (ft): 0035

Structure Length (ft): 000037

Lt Curb/Sidewalk Width (ft): 0

Rt Curb/Sidewalk Width (ft): 0

Bridge Rdwy Width Curb-to-Curb (ft): 10.3

Deck Width Out-to-Out (ft): 12

Appr. Roadway Width (ft): 011

Skew: 05

Bridge Median: 0 NO MEDIAN

Min Vertical Clr Over (ft): 99 FT 99 IN

Feature Under: FEATURE NOT A HIGHWAY OR RAILROAD

Min Vertical Underclr (ft): 00 FT 00 IN

STRUCTURE TYPE and MATERIALS

Bridge Type: ROLLED BM W TMBR DK

Number of Approach Spans 0000 | *Number of Main Spans: 001*

Kind of Material and/or Design: 3 STEEL

Deck Structure Type: 8 TIMBER

Type of Wearing Surface: 7 WOOD OR TIMBER

Type of Membrane 0 NONE

Deck Protection: 7 CCA.CREOSOTED WOOD

APPRAISAL

Bridge Railings: 0 DOES NOT MEET CURRENT STANDARD

Transitions: 0 DOES NOT MEET CURRENT STANDARD

Approach Guardrail 1 MEETS CURRENT STANDARD

Approach Guardrail Ends: 1 MEETS CURRENT STANDARD

Structural Evaluation: 5 BETTER THAN MINIMUM TOLERABLE CRITERIA

Deck Geometry: 2 INTOLERABLE, REPLACEMENT NEEDED

Underclearances Vertical and Horizontal: N NOT APPLICABLE

Waterway Adequacy: 7 SLIGHT CHANCE OF OVERTOPPING BRIDGE & ROADWAY

Approach Roadway Alignment: 8 EQUAL TO DESIRABLE CRITERIA

Scour Critical Bridges: 8 STABLE FOR SCOUR

LOAD RATING and POSTING

Rating Method (Inv): 2 ALLOWABLE STRESS (AS)

Rating (Inv): 2 HS LOADING 23 Tons

Rating Method (Oper): 2 ALLOWABLE STRESS (AS)

Rating (Oper): 2 HS LOADING 34 Tons

Bridge Posting: 5 NO POSTING REQUIRED

Posting Status: A OPEN, NO RESTRICTION

Design Load: 0 OTHER OR UNKNOWN

INSPECTION

Inspection Date: 092013 | *Inspection Frequency (months): 24*

INSPECTION SUMMARY and NEEDS

9/17/2013 Interior beams should be replaced with beams the same size as the fascia beams. All beam should be cleaned and painted. Dam on the upstream side should be remove. ~FRE/SJH

8/8/2011 The structure is in fair to good condition. The interior beams bow at midspan which may have been caused by over loads and should be replaced in the near future. The home made gravel and stone dam should be removed on the upstream side. ~ DCP/FRE

Route: C3014 Bridge #: 7 District: 5 Date: 9/17/13
Town: BOLTON Crossing: MILL BROOK Inspection Type: Routine
Bridge Type: ROLLED BEAM W/TIMBER DK Inspectors: FRE/SJH

Item 72 Approach Alignment * Problem Area ** Critical Area

Alignment: Straight on abutment #1 side Minor curve on abutment #2 side. Minor downhill grade. Town gravel road.
Rail: Galv. beam rail is in good condition.
Post: Galv. post with galv. offset blocks.
Settlement: None seen
Erosion: None seen

Item 58 Deck

Wearing Surface: Bare rough cut nail laminated wood deck with minor wear in the wheel tracks.
Curb: 4@ 2x6 rough cut planks nail laminated with minor rot on abutment #2 upstream side.
Sidewalks:
Rail: Galv. beam rail is in good condition.
Rail Posts: 6x8 timber post with knee bracing all are in good condition.
Joint Type*: None and < >   *Finger Sliding Vertical Modular VT Cork Strip Compression Plug Other None   Joint Condition:
Joint Leakage:
Drains:
Fascia: Good condition.
Soffit: Areas of white mold. Most is in good condition.

Vertical:
Diagonals:
Chords:
Gussets:
Lateral Bracing: Channel beam diaphragms are in good condition.
Stringers:
Floorbeams:
Girders/Beams: 4 Rolled beams Larger fascia beams are in good condition with light rust scale. 2 Smaller interior beams are bent from possible high-water event.
Cover Plates:
Paint: Paint has failed.
Bearing Type*: Sliding and < > *Sliding Bronze Fabric Elastomeric Pot Rockers Nested Rockers Nested Rollers Wood Other None **Bearing Condition: Good condition. The interior beams are poured into concrete.**
Arches:
Roof/Portal/Siding:
Member Alignment: Straight beams and deck
Impact Damage: 2 Interior beams have been bent from possible high-water event.
FCM No Comments:

Town: Bolton Route: C3014 Br #: 7 Date: 9/17/2013

Item 60 Substructure Abutments * Problem Areas ** Critical Areas

Backwalls: Both backwalls are in good condition.
Bridge Seats: Clean and in good condition.
Stems: Both abutments have minor cracking and scaling. One of the 2 timber bents has been removed leaving one in place on abutment #1 side and is in fair condition.
Wingwalls: Retaining walls are in good condition.
Footings: Structure is on ledge.
Undermining: Small voids on abutment #1 side.
Settlement: None seen

Piers < >

Bridge Seats: One timber bent.
Cap:
Shaft:
Columns:
Footings:
Undermining:
Settlement:

Alignment: Straight through.
Scour: Channel is ledge and gravel pockets.
Erosion: Minor on the downstream side.
Debris/Bars: Manmade rock and gravel dam on the upstream side.
Protection:
Waterway Opening: Good

Posting: Yes Posted Loading @ Abut. 1: Abut. 2: 16000 on abutment #2 side only
*Code all items to reflect current situation

Posted Vert. Clr @ Abut. 1: Abut. 2:

Actual Low Vertical Clearance Measured:

Additional Signing or Restriction: < >, < >, < >, < >

*Is a letter needed to improve posting for missing or damaged signs? < >

*Is a letter needed for posting necessary due to bridge condition or load rating? < >

Summary: 9/17/2013 Interior beams should be replaced with beams the same size as the fascia beams. All beam should be cleaned and painted. Dam on the upstream side should be remove. ~FRE/SJH	Deck:	7
	Superstructure:	5
	Substructure:	7
	Channel:	8
	Approach:	8
	Paint:	5

Last Modified on: April 5, 2013

STRUCTU INSPECTION, INVENTORY and APPRAISAL SHEET

Vermont Agency of Transportation ~ Structures Section ~ Bridge Management and Inspection Unit

Inspection Report for BOLTON | *bridge no.: 00007* | *District: 5*

Located on: C3014 *over MILL BROOK* | *approx. 0.1 MI TO JCT W CL2 TH3* | *Owner: 03 TOWN-OWNED*

CONDITION

Deck Rating: 7 GOOD

Superstructure Rating: 5 FAIR

Substructure Rating: 7 GOOD

Channel Rating: 8 VERY GOOD

Culvert Rating: N NOT APPLICABLE

Federal Str. Number: 100401000704011

Federal Sufficiency Rating (April 2011): 50.8

Deficiency Status of Structure (April 2011): FD

AGE and SERVICE

Year Built: 1919 Year Reconstructed: 0000

Service On: 1 HIGHWAY

Service Under: 5 WATERWAY

Lanes On the Structure: 01

Lanes Under the Structure: 00

Bypass, Detour Length (miles): 99

ADT: 000010 % Truck ADT: 02

Year of ADT: 2007

GEOMETRIC DATA

Length of Maximum Span (ft): 0035

Structure Length (ft): 000037

Lt Curb/Sidewalk Width (ft): 0

Rt Curb/Sidewalk Width (ft): 0

Bridge Rdwy Width Curb-to-Curb (ft): 10.3

Deck Width Out-to-Out (ft): 12

Appr. Roadway Width (ft): 011

Skew: 05

Bridge Median: 0 NO MEDIAN

Min Vertical Clr Over (ft): 99 FT 99 IN

Feature Under: FEATURE NOT A HIGHWAY OR RAILROAD

Min Vertical Underclr (ft): 00 FT 00 IN

STRUCTURE TYPE and MATERIALS

Bridge Type: ROLLED BM W TMBR DK

Number of Approach Spans: 0000 *Number of Main Spans: 001*

Kind of Material and/or Design: 3 STEEL

Deck Structure Type: 8 TIMBER

Type of Wearing Surface: 7 WOOD OR TIMBER

Type of Membrane: 0 NONE

Deck Protection: 7 CCA.CREOSOTED WOOD

APPRAISAL *AS COMPARED TO FEDERAL STANDARDS

Bridge Railings: 0 DOES NOT MEET CURRENT STANDARD

Transitions: 0 DOES NOT MEET CURRENT STANDARD

Approach Guardrail: 1 MEETS CURRENT STANDARD

Approach Guardrail Ends: 1 MEETS CURRENT STANDARD

Structural Evaluation: 5 BETTER THAN MINIMUM TOLERABLE CRITERIA

Deck Geometry: 2 INTOLERABLE, REPLACEMENT NEEDED

Underclearances Vertical and Horizontal: N NOT APPLICABLE

Waterway Adequacy: 7 SLIGHT CHANCE OF OVERTOPPING BRIDGE & ROADWAY

Approach Roadway Alignment: 8 EQUAL TO DESIRABLE CRITERIA

Scour Critical Bridges: 8 STABLE FOR SCOUR

DESIGN VEHICLE, RATING, and POSTING

Load Rating Method (Inv): 2 ALLOWABLE STRESS (AS)

Posting Status: A OPEN, NO RESTRICTION

Bridge Posting: 5 NO POSTING REQUIRED

Load Posting: 10 NO LOAD POSTING SIGNS ARE NEEDED

Posted Vehicle: POSTING NOT REQUIRED

Posted Weight (tons):

Design Load: 0 OTHER OR UNKNOWN

INSPECTION and CROSS REFERENCE

X-Ref. Route:

Insp. Date: 082011 *Insp. Freq. (months) 24* *X-Ref. BrNum:*

INSPECTION SUMMARY and NEEDS

8/8/2011 The structure is in fair to good condition. The interior beams bow at midspan which may have been caused by over loads and should be replaced in the near future. The home made gravel and stone dam should be removed on the upstream side. ~ DCP/FRE

Route: C3014 Bridge #: 7 District: 5 Date: 8/8/11
Town: Bolton Crossing: Mill Brook Inspection Type: Routine
Bridge Type: Timber deck with Rolled beam Inspectors: DCP & FRE

Item 72 Approach Alignment * Problem Area ** Critical Area

Alignment: Slight curve with a minor down grade.
Rail: Galvanized steel beam rail in good condition.
Post: Galvanized posts with offset blocks.
Settlement: None
Erosion: None

Item 58 Deck

Wearing Surface: Nail laminated 2 by 6"rough cut on edge with light tire wear.
Curb: Timber curbs made up of 4 layers laying flat in good condition.
Sidewalks:
Rail: Galvanized steel beam rail in good condition.
Rail Posts: 6 by 8" timber posts anchored to the curbs with knee bracing in good condition.
Joint Type*: None and < >   *Finger Sliding Vertical Modular VT Cork Strip Compression Plug Other None   Joint Condition:
Joint Leakage:
Drains: None
Fascia: Good condition.
Soffit: Clean in good condition.

Vertical:
Diagonals:
Chords:
Lateral Bracing:
Stringers:
Floorbeams:
Girders/Beams: 4 rolled beams with 2 sets of channel diaphragms The 2 interior beams bow some possibly from over loads beam 2 is the worst. There is surface rust and freckled rust scale in the beams.
Cover Plates: None
Paint: Paint failled.
Bearing Type*: Sliding and < > ***Sliding Bronze Fabric Elastomeric Pot Rockers Nested Rockers Nested Rollers Wood Other None** **Bearing Condition: Good condition surface rust..**
Arches:
Roof/Portal/Siding:
Member Alignment: The deck is straight and the interior beams bow possibly caused by over loads.
Impact Damage: The2 interior beams bow at midspan possibly caused by over loads.
FCM No Comments:

Town: Bolton Route: C3014 Br #: 7 Date: 8/8/11

Item 60 Substructure Abutments * Problem Areas ** Critical Areas

Backwalls: Concrete in good condition.
Bridge Seats: Good condition
Stems: Abutment stems have horizontal cracking near the tops on the ends. There are tempoary timber bents inbetween the abutments and midspan. The timber bents are in good condition for the most part but have small blocks between the abutments and the horrizont plank which sit on the ledge these blocks are quite unstable.
Wingwalls: Concrete retainer walls in good condition.
Footings: small footings on the downstream end abutment2. The abutments are casted to ledge.
Undermining: None abutments are casted to ledge. There are some spalls at the bottoms with small voids between the ledge on both abutments on the downstream side.
Settlement: None

Piers < >

Bridge Seats:
Cap:
Shaft:
Columns:
Footings:
Undermining:
Settlement:

Alignment: Staight through.
Scour: None Ledge in the channel
Erosion: None
Debris/Bars: There is a home made gravel and stone dam just upstream of the structure which should be removed.
Protection: Ledge with timber bents under the beams in between the abutments and midspan.
Waterway Opening: good condition.

Posting: Yes No X Posted Loading @ Abut. 1: Abut. 2:

Posted Vert. Clr @ Abut. 1: Abut. 2:

Vert. Clr:	Lt. Shoulder	Center	Rt. Shoulder	Median
	Lt. Shoulder	Center	Rt. Shoulder	

Measurements taken Heading: < >

Additional Signing Restriction:

Summary: 8/8/2011 The structure is in fair to good condition. The interior beams bow at midspan which may have been caused by over loads and should be replaced in the near future. The home made gravel and stone dam should be removed on the upstream side. ~DCP/FRE	Deck:	7
	Superstructure:	5
	Substructure:	7
	Channel:	8
	Approach:	8
	Paint:	5

Last Modified on: April 8, 2011

STRUCTURE INSPECTION, INVENTORY and APPRAISAL SHEET

Vermont Agency of Transportation ~ Structures Section ~ Bridge Management and Inspection Unit

Inspection Report for BOLTON | *bridge no.: 00007* | *District: 5*

Located on: C3014 | *over MILL BROOK* | *approx. 0.1 MI TO JCT W CL2 TH3* | *Owner: 03 TOWN-OWNED*

CONDITION

Deck Rating: 7 GOOD

Superstructure Rating: 5 FAIR

Substructure Rating: 7 GOOD

Channel Rating: 7 GOOD

Culvert Rating: N NOT APPLICABLE

Federal Str. Number: 100401000704011

Federal Sufficiency Rating (April 2010): 50.8

Deficiency Status of Structure (April 2010): FD

AGE and SERVICE

Year Built: 1919 Year Reconstructed: 0000

Service On: 1 HIGHWAY

Service Under: 5 WATERWAY

Lanes On the Structure: 01

Lanes Under the Structure: 00

Bypass, Detour Length (miles): 99

ADT: 000010 % Truck ADT: 02

Year of ADT: 2007

GEOMETRIC DATA

Length of Maximum Span (ft): 0035

Structure Length (ft): 000037

Lt Curb/Sidewalk Width (ft): 0

Rt Curb/Sidewalk Width (ft): 0

Bridge Rdwy Width Curb-to-Curb (ft): 10.3

Deck Width Out-to-Out (ft): 12

Appr. Roadway Width (ft): 011

Skew: 05

Bridge Median: 0 NO MEDIAN

Min Vertical Clr Over (ft): 99 FT 99 IN

Feature Under: FEATURE NOT A HIGHWAY OR RAILROAD

Min Vertical Underclr (ft): 00 FT 00 IN

STRUCTURE TYPE and MATERIALS

Bridge Type: ROLLED BM W TMBR DK

Number of Approach Spans: 0000 | *Number of Main Spans: 001*

Kind of Material and/or Design: 3 STEEL

Deck Structure Type: 8 TIMBER

Type of Wearing Surface: 7 WOOD OR TIMBER

Type of Membrane: 0 NONE

Deck Protection: 7 CCA.CREOSOTED WOOD

APPRAISAL *AS COMPARED TO FEDERAL STANDARDS

Bridge Railings: 0 DOES NOT MEET CURRENT STANDARD

Transitions: 0 DOES NOT MEET CURRENT STANDARD

Approach Guardrail: 1 MEETS CURRENT STANDARD

Approach Guardrail Ends: 1 MEETS CURRENT STANDARD

Structural Evaluation: 5 BETTER THAN MINIMUM TOLERABLE CRITERIA

Deck Geometry: 2 INTOLERABLE, REPLACEMENT NEEDED

Underclearances Vertical and Horizontal: N NOT APPLICABLE

Waterway Adequacy: 7 SLIGHT CHANCE OF OVERTOPPING BRIDGE & ROADWAY

Approach Roadway Alignment: 6 EQUAL TO MINIMUM CRITERIA

Scour Critical Bridges: 8 STABLE FOR SCOUR

DESIGN VEHICLE, RATING, and POSTING

Load Rating Method (Inv): 2 ALLOWABLE STRESS (AS)

Posting Status: A OPEN, NO RESTRICTION

Bridge Posting: 5 NO POSTING REQUIRED

Load Posting: 01 NO LOAD POSTING SIGNS EXIST NEAR BRIDGE

Posted Vehicle: POSTING NOT REQUIRED

Posted Weight (tons):

Design Load: 0 OTHER OR UNKNOWN

INSPECTION and CROSS REFERENCE

X-Ref. Route:

Insp. Date: 082009 | *Insp. Freq. (months) 24* | *X-Ref. BrNum:*

INSPECTION SUMMARY and NEEDS

08/25-09 This structure is in fair to good condition. The interior beams are twisted, maybe caused from over loads. DCP

State Of Vermont (Page 1)
Bridge Inspection Form

Route C3014 Bridge # 7 District 5 Date 8-25-09
Town Bolton Crossing Mill Brook
Bridge Type Rolled beam w/timber deck Inspectors DCP/JW

Item 72 Approach Alignment * Problem Area ** Critical Area

Alignment: Sharp turn on abutment 2 straight abutment 1

Rail: Galv std stl beam rail

Post: Galv posts w/ offset blocks

Settlement None

Erosion: None

Rating 6

Item 58 Deck

Wearing Surface: Nail laminated timber deck running transverse some slight wear.

Curb: Nail laminated timber curbs ok

Sidewalks:

Rail: Heavy duty timber posts nailed to the curb & the timber deck on longer deck planks ok

Rail Posts:

Joint: Finger Sliding Vertical Modular VT Cork Strip Compression Plug Other None

None

Joint Leakage:

Drains: None

Fascia: Good condition

Timber planks in good condition

Rating 7

Item 59 Superstructure * Problem ** Critical

Vertical:

Diagonals:

Chords:

Lateral Bracing:

Stringers:

Floorbeams:

Girders/Beams: 2 Larger IBm For Fascia beams & 2 smaller IBms. w/ small channel diaphragms. Some light rust scale at abutments The 2 inside beams Twisted Some the 2Nd beam in The worst From Large Loads Freckled surface rust in webs Flanges

Cover Plates:

Paint: None maybe A588 STL **Paint rating** 5

Bearings: Sliding Bronze Fabric Elastomeric Pot Rockers Nested Rockers Nested Rollers Wood other None

None

Arches:

Roof/Portal/Siding:

Member Alignment: Deck beams straight

Impact Damage: None

FCM Yes (No) **Comments:**

Rat

5

Bridge Inspection Form **Town** Bolton **Route** C3014 **Br #** 7 **Date** 8-25-09

Item 60 Substructure Abutments *** Problem Areas** **** Critical Areas**

Backwalls: Conc backwalls

Bridge Seats: Clean the smaller beams sit on top of small conc extension. Some break-up in the conc under the beams. on the edges.

Stems: Conc Few shrinkage cracks in the tops some spalling at Footing.

Wings: laid up stone retainer walls behind the abutments. Some Voids in between stones

Wing Rating 6

Footings: conc Footings spalling in abutment 1 at bottom. Few voids between Ledge outcrops.

Undermining None

Settlement: None

Piers

Bridge Seats:

Cap:

Shaft:

Columns: temporary Timber columns under the beams. sitting on ledge for supports. Ok could wash out at high water connect to column with vertical planking & Timber

Footings: board diagonal between columns.

Undermining:

Settlement:

Rating 7

Item 61 Channel * Problem Areas ** Critical Areas (Page 4)

Alignment: MINOR TURN IN

Scour: NONE Ledge IN Channel

Erosion: MINOR ON abutment 2 bank & downstream bank IN places

Debris/Bars: Small home made dam. Just upstream

Protection: Ledge IN Channel

Waterway Opening: OK.

Rating 7

Posting: Yes No **Posted Loading Abut. 1** _____ **Abut. 2** _____

Posting Vert. Clr _____ **Vert. Clr. Lt Shoulder** _____ **Cent.** _____ **Rt. Shoulder** _____

Additional Signing Restriction _____

Special Equipment/Access Staging _____ **Servi-Lift** _____ **Boat** _____ **Divers** _____ **NDT** _____

Summary: This structure is IN good to Fair condition. The interior beams are twisted. Maybe From over Loads.

Sketch:

STRUCTURAL INSPECTION, INVENTORY and APPRAISAL SHEET

Vermont Agency of Transportation ~ Structures Section ~ Bridge Management and Inspection Unit

Inspection Report for BOLTON *bridge no.: 00007* *District: 5*

Located on: C3014 *over MILL BROOK* *approximately 0.1 MI TO JCT W CL2 TH3* *Owner: 03 TOWN-OWNED*

CONDITION

Deck Rating: 7 GOOD

Superstructure Rating: 5 FAIR

Substructure Rating: 7 GOOD

Channel Rating: 7 GOOD

Culvert Rating: N NOT APPLICABLE

Federal Str. Number: 100401000704011

Federal Sufficiency Rating: 51.2

Deficiency Status of Structure: FD

AGE and SERVICE

Year Built: 1919 Year Reconstructed: 0000

Service On: 1 HIGHWAY

Service Under: 5 WATERWAY

Lanes On the Structure: 01

Lanes Under the Structure: 00

Bypass, Detour Length (miles): 99

ADT: 000010 % Truck ADT: 02

Year of ADT: 2004

GEOMETRIC DATA

Length of Maximum Span (ft): 0035

Structure Length (ft): 000037

Lt Curb/Sidewalk Width (ft): 0

Rt Curb/Sidewalk Width (ft): 0

Bridge Rdwy Width Curb-to-Curb (ft): 10.3

Deck Width Out-to-Out (ft): 12

Appr. Roadway Width (ft): 011

Skew: 05

Bridge Median: 0 NO MEDIAN

Min Vertical Clr Over (ft): 99 FT 99 IN

Feature Under: FEATURE NOT A HIGHWAY OR RAILROAD

Min Vertical Underclr (ft): 00 FT 00 IN

STRUCTURE TYPE and MATERIALS

Bridge Type: ROLLED BM W TMBR DK

Number of Approach Spans: 0000 Number of Main Spans: 001

Kind of Material and/or Design: 3 STEEL

Deck Structure Type: 8 TIMBER

Type of Wearing Surface: 7 WOOD OR TIMBER

Type of Membrane: 0 NONE

Deck Protection: 7 CCA.CREOSOTED WOOD

APPRAISAL *AS COMPARED TO FEDERAL STANDARDS

Bridge Railings: 0 DOES NOT MEET CURRENT STANDARD

Transitions: 0 DOES NOT MEET CURRENT STANDARD

Approach Guardrail: 1 MEETS CURRENT STANDARD

Approach Guardrail Ends: 1 MEETS CURRENT STANDARD

Structural Evaluation: 5 BETTER THAN MINIMUM TOLERABLE CRITERIA

Deck Geometry: 2 INTOLERABLE, REPLACEMENT NEEDED

Underclearances Vertical and Horizontal: N NOT APPLICABLE

Waterway Adequacy: 7 SLIGHT CHANCE OF OVERTOPPING BRIDGE & ROADWAY

Approach Roadway Alignment: 6 EQUAL TO MINIMUM CRITERIA

Scour Critical Bridges: 8 STABLE FOR SCOUR

DESIGN VEHICLE, RATING, and POSTING

Load Rating Method (Inv): 2 ALLOWABLE STRESS (AS)

Posting Status: A OPEN, NO RESTRICTION

Bridge Posting: 5 NO POSTING REQUIRED

Load Posting: 01 NO LOAD POSTING SIGNS EXIST NEAR BRIDGE

Posted Vehicle: POSTING NOT REQUIRED

Posted Weight (tons):

Design Load: 0 OTHER OR UNKNOWN

INSPECTION and CROSS REFERENCE

X-Ref. Route:

Insp. Date: 102007 Insp. Freq. (months) 24 X-Ref. BrNum:

INSPECTION SUMMARY and NEEDS

09/01/2005 The overall condition of this bridge is fair to satisfactory.(PLB)

10/25/2007 The overall condition of this bridge is fair due mostly to the horizontal sweep and S-bends in Beam No.2.(PLB)

DATE 10/25/2007

TRANS
BRIDGE INSPECTION FORM

ROUTE TH #14 **BRIDGE#** 7 **INSPECTORS** PLB,DAK
TOWN BOLTON **CROSSING** MILL BROOK
TYPE ROLLED BEAM WITH TIMBER DECK

BR.CHECKLIST: **Problem Areas* *** Critical Areas*

GENERAL COMMENTS:

APPROACH -

Alignment
Rail
Settlement
Erosion

No erosion or settlement is seen at this time. The approach rails all around are in good condition.

DECK -

Wearing Surface
Curbs
Sidewalk
Fascia
Rail system
Exp. Joint
Drains
Soffit

The deck surface has moderate to medium saturation with moss growth throughout many members. The curbs and fascia areas on both sides are in good condition. No sidewalks, joints or surface drains exist. The bridge guardrails on both sides are in good condition. The deck soffit area is in good condition.

SUPERSTRUCTURE-

Girders
Beams
Truss
Arch
Floorsystem
Cover Plates
Bearings
Paint
Impact Damage
Alignment

The steel beams with no cover plates are in satisfactory condition with the exception of beam No.2 which has heavy horizontal sweep and forms an S-bend laterally. The diaphragms forming the inter connections between the beam are small and light.

SUBSTRUCTURE -

Backwall
Bridge Seat
Stem
Wing
Cap
Shaft
Column
Footing
Piles
Undermining
Settlement

The stemwalls of both abutments are in satisfactory condition. The footings of both abutments are fully exposed. Minor undermining occurs on the downstream end of abutment No.2. No piles, undermining or settlement is seen at this time.

CHANNEL -

Alignment
Scour
Erosion
Debris
Protection

The waterway and channel are in good condition. No scour, erosion or debris is seen at this time.

GENERAL DATA:

					REMARKS:
Does the bridge have a F.C. component? -	☐	**Yes**	☒	**No**	
Is the bridge posted for loading? -	☒	**Yes**	☐	**No**	16,000 lbs
Is the bridge posted for Width restriction? -	☐	**Yes**	☒	**No**	
Is the bridge posted for clearance restriction? -	☐	**Yes**	☒	**No**	

Measured VERTICAL clearances -LT. Shoulder Centerline RT. Shoulder Overall

Sketch

INSPECTORS CONDITION RATINGS:

DECK	7-
SUPERSTRUCTURE	5-
SUBSTRUCTURE	7
CHANNEL	7
APPROACH	6
PAINT	5

SUMMARY: The overall condition of this bridge is fair due mostly to the horizontal sweep and S-bends in Beam No.2.

STRUCT INSPECTION, INVENTORY and AP ISAL SHEET

Vermont Agency of Transportation ~ Structures Section ~ Bridge Management and Inspection Unit

Inspection Report for BOLTON | *bridge no.: 00007* | *District: 5*

Located on: C3014 | *over MILL BROOK* | *approximately 0.1 MI TO JCT W CL2 TH3* | *Owner: 03 TOWN-OWNED*

CONDITION

Deck Rating: 7 GOOD
Superstructure Rating: 5 FAIR
Substructure Rating: 7 GOOD
Channel Rating: 7 GOOD
Culvert Rating: N NOT APPLICABLE
Federal Str. Number: 100401000704011
Federal Sufficiency Rating: 52.9
Deficiency Status of Structure: FD

AGE and SERVICE

Year Built: 1919 Year Reconstructed: 0000
Service On: 1 HIGHWAY
Service Under: 5 WATERWAY
Lanes On the Structure: 01
Lanes Under the Structure: 00
Bypass, Detour Length (miles): 99
ADT: 000010 % Truck ADT: 02
Year of ADT: 2004

GEOMETRIC DATA

Length of Maximum Span (ft): 0035
Structure Length (ft): 000037
Lt Curb/Sidewalk Width (ft): 0
Rt Curb/Sidewalk Width (ft): 0
Bridge Rdwy Width Curb-to-Curb (ft): 10.3
Deck Width Out-to-Out (ft): 12
Appr. Roadway Width (ft): 011
Skew: 05
Bridge Median: 0 NO MEDIAN
Min Vertical Clr Over (ft): 99 FT 99 IN
Feature Under: FEATURE NOT A HIGHWAY OR RAILROAD
Min Vertical Underclr (ft): 00 FT 00 IN

STRUCTURE TYPE and MATERIALS

Bridge Type: ROLLED BM W TMBR DK
Number of Approach Spans: 0000 Number of Main Spans: 001
Kind of Material and/or Design: 3 STEEL
Deck Structure Type: 8 TIMBER
Type of Wearing Surface: 7 WOOD OR TIMBER
Type of Membrane: 0 NONE
Deck Protection: 7 CCA.CREOSOTED WOOD

APPRAISAL

Bridge Railings: 0 DOES NOT MEET CURRENT STANDARD
Transitions: 0 DOES NOT MEET CURRENT STANDARD
Approach Guardrail: 1 MEETS CURRENT STANDARD
Approach Guardrail Ends: 1 MEETS CURRENT STANDARD
Structural Evaluation: 5 BETTER THAN MINIMUM TOLERABLE CRITERIA
Deck Geometry: 2 INTOLERABLE, REPLACEMENT NEEDED
Underclearances Vertical and Horizontal: N NOT APPLICABLE

Waterway Adequacy: 7 SLIGHT CHANCE OF OVERTOPPING BRIDGE & ROADWAY

Approach Roadway Alignment: 6 EQUAL TO MINIMUM CRITERIA

Scour Critical Bridges: 8 STABLE FOR SCOUR

LOAD RATING and POSTING

Rating Method (Inv): 2 ALLOWABLE STRESS (AS)
Rating (Inv): 2 HS LOADING 23 Tons
Rating Method (Oper): 2 ALLOWABLE STRESS (AS)
Rating (Oper): 2 HS LOADING 34 Tons
Bridge Posting: 5 NO POSTING REQUIRED
Posting Status: A OPEN, NO RESTRICTION
Design Load: 0 OTHER OR UNKNOWN

INSPECTION and CROSS REFERENCE

Cross Ref. Route:
Insp. Date: 092005 Insp. Freq. (months) 24 Cross Ref. BrNum:

INSPECTION SUMMARY and NEEDS

09/01/2005 The overall condition of this bridge is fair to satisfactory.

STATE OF VERMONT- *VTrans*

BRIDGE INSPECTION FORM

ROUTE TH #14 BRIDGE NO. 7 DISTRICT 5 DATE 09-01-2005
TOWN Bolton CROSSING Mill Brook
BRIDGE TYPE Rolled Beam w/ Timber deck INSPECTORS PLB, DMK

ITEM 72 – APPROACH ALIGNMENT * Problem Areas ** Critical Areas

Alignment:	Straight in, thru and out
Rail:	Galv. Stl. Bm good condition
Rail Posts:	Galv. Stl H. Bm good condition
Settlement/Erosion:	Hvy rutting on the approach end

CONDITION RATING: 6

ITEM 58 - DECK

Wearing Surface:	Bare wooden Deck minor planed. abrasion and wear
Fascia:	Good condition
Soffit:	
Curbs:	
Sidewalk:	None
Br. Rail:	Galv. Stl. Bm good condition
Rail Posts:	Sq PT Timber posts good condition
Exp. Joint:	None
Joint Leakage:	
Drains:	

CONDITION RATING: 7

ITEM 59 - SUPERSTRUCTURE

Verticals:	N/A
Diagonals:	
Chords:	
Lateral Bracing:	
Stringers:	
Floorbeams:	
Girders/Beams:	Bms 2 and 3 have hvy sweeps.
Cover Plates:	None
Paint:	80% paint loss w/ rusting — Paint Rating: 5
Bearings:	None
Arches:	N/A
Roof/Portal/Siding:	
Alignment:	Hvy sweeps on bms 2 and
Impact Damage:	None
FCM Yes (No) Comment:	

CONDITION RATING: 5

ITEM 60 – SUBSTRUCTURE

☐ **Abutments** — * Problem Areas — Critical Areas

Backwall:	minor cracks w/ some debris build-up
Bridge Seat:	minor tomed spalls around bm. ends on the interior.
Stem:	occassional horiz cracks w/ mod. efflo.
Wingwall:	None
Footings:	exposed on both abutments.
Undermining:	pocketted voids under both stemwalls in scattered locations
Settlement:	None

☐ **Piers**

Bridge Seat:	N/A
Cap:	
Shaft:	
Columns:	
Footings:	
Undermining	
Settlement:	

CONDITION RATING: 7

ITEM 61 – CHANNEL

Alignment:	mod turned at bridge in flows closer to abut. No. and exits on a curved 40' straight skew sup.
Scour:	Deep pool on US channel
Erosion:	lack of silt behind the ds wing of abut. No. 1
Debris/Bars:	None
Protection:	ledge boulders and outcrops.
Waterway Opening:	Adequate

CONDITION RATING: 7

- Posting: (Yes) No Posted Loading: Abut. #1 _____ Abut. #2 16,000 lbs.
- Posted Vert. Clr: None Measured Vert. Clr: Lt. Shoulder _____ Centerline _____ Rt. Shoulder _____
- Additional Signing/Restrictions: none
- Special Equipment/Access: Staging _____ Servi-lift _____ Boat _____ Divers _____ NDT _____

Comments: The overall condition of this bridge is fair to satisfactory.

Bolton Town Highway 14 Bridge 7 **6/19/03**

Structure Type: Steel Beam Bridge with timber deck over Mill Brook

Deck: The deck consists of 2x6 nail laminated pressure treated timber planks on edge. Timber deck is in fairly good condition, there is light gravel build up along the timber curbs.

Superstructure: Structural steel is in fairly good condition, there is only areas of freckled rust and is mainly surface rust in the rolled beams. Beams 2 and 3 bow and twist some, beam 2 is the worst it has quite a lot of twist and bows in this beam, possibly cause by over weight vehicle using the bridge.

Substructure: Abutment 1 is in fairly good condition with only a few areas of light scaling and a few areas of light spalls down along the bottom at the concrete footing, this structure is cast down to ledge. Abutment 2 is similar with areas of a few fine cracks and leaks, there is some areas of light spalling and scaling down along the concrete footing which is also cast down to ledge. There are a few areas of voids where the footing didn't get cleaned out well enough down to the ledge on abutment 2 downstream under the wing. There are map cracks on the end of the wings on the downstream side there are some map cracks on the wing at abutment 2 on the upstream side. Other wise the structure is in fairly good condition. There are also some areas of voids on the downstream wing at abutment 2 where it didn't get cleaned down to the ledge well enough. However these voids are just minor voids.

Inspectors: Doane Preedom & Floyd Earle
DCP0606_0620.doc

STATE OF VERMONT- *VTrans*

BRIDGE INSPECTION FORM

ROUTE TH14 BRIDGE NO. 7 DISTRICT 5 DATE 6-19-03
TOWN BOLTON CROSSING Mill Brook
BRIDGE TYPE Simple Span Rolled Bm w/ Timber DK INSPECTORS DCP/FE

ITEM 72 – APPROACH ALIGNMENT

* Problem Areas ** Critical Areas

Alignment: Straight abutt Fairly sharp turn abutt gradual downgrade Through The Structure.
Rail: Galv STL Bm rail
Posts: Galv Posts w/offset blocks
Settlement/Erosion: NONE

CONDITION RATING: 6

ITEM 58 - DECK

Wearing Surface: 2x6 Nail Laminated CCA Treated Timber Planks ON edge Some Light wear
Fascia: Good
Soffit: Clean underside
Curbs: 4 Layers wide of 2x6 CCA treated
Sidewalk:
Br. Rail: Galv STL Bm rail
Posts: Heavy duty CCA Treated timber posts
Exp. Joint: None
Joint Leakage: None
Drains: None

CONDITION RATING: 7

ITEM 59 - SUPERSTRUCTURE

Verticals:
Diagonals:
Chords:
Lateral Bracing:
Stringers:
Floorbeams:
Girders/Beams: 4 Rolled Bms. Bms 1 and 4 are Larger bms
Cover Plates: Bms 2+3 have some Twists and Bows. bm 2 is
Paint: the worst. All Bms have Freckled Freckled rust Paint Rating: 5
Bearings: Channel diaphragms have scale Freckled rust scale
Arches:
Roof/Portal/Siding:
Member Alignment: Bm's 2+3 have some Twists and Bows
Impact Damage: NONE
Yes No Comment:

CONDITION RATING: 5

ITEM 60 – SUBSTRUCTURE

☐ **Abutments** * Problem Areas ** Critical Areas

Backwall:	Some Cracking where bms are casted into the backwalls
Bridge Seat:	Clean
Stem:	Few minor crack some scaling at bottoms
Wingwall:	Minor map cracks about 2 wings & about 1 downstream wing
Footings:	Conc Footing
Undermining:	Small Pockets of Voids where the Footing wasn't cleaned down to Ledge
Settlement:	None

☐ **Piers**

Bridge Seat:	N/A
Cap:	
Shaft:	
Columns:	
Footings:	
Undermining	
Settlement:	

CONDITION RATING: 7

ITEM 61 – CHANNEL

Alignment:	Straight
Scour:	None Ledge
Erosion:	None Ledge
Debris/Bars:	None
Protection:	None
Waterway Opening:	OK

CONDITION RATING: 8

- Posting: *Yes* *No* Posted Loading: Abut. #1 _____ Abut. #2 _____
- Posted Vert. Clr: _____ Measured Vert. Clr: Lt. Shoulder _____ Centerline _____ Rt. Shoulder _____
- Additional Signing/Restrictions: _____
- Special Equipment/Access: Staging _____ Servi-lift _____ Boat _____ Divers _____ NDT _____

Comments: This structure is in good to Fair condition the Fair being the rodded 2+3 which Bow & twists some, the channel diaphragms may have been add after the damage was done.

Bolton T-H #14 Bridge #7 **June 21, 2001**

Structure Type: Steel Beam Bridge with Timber Deck over Mill Brook

Approach: Both approaches have a gravel-wearing surface. Abutment #1 approach is relatively straight. There is a sharp to minor turn onto the structure at abutment #2. There is a gradual downgrade through the structure. Approach guardrail consists of galvanized beam rail on galvanized posts with offset blocks.

Deck: Deck consists of two by six nail laminated on edge timber planks running transversely. These planks are pressure treated. There is some slight wear in the planks on the traffic lines. There are two by six timber curbing made up of four layers of two by six. These curbing appear to be pressure treated. The boards are laying flat and running longitudinally along both edges of the deck. Bridge guardrail consists of galvanized steel beam rail on heavy-duty six by eight pressure treated timber posts. These posts are supported in the back by diagonal bracing. The deck is cantilevered out at the post area and the diagonal is toe nailed into the deck and to the top of the posts. Posts are also bolted to the curbing. The underside of the deck is relatively clean.

Superstructure: Superstructure consists of four rolled beams. The two fascia beams are larger than the two interior beams. There are small channel diaphragms in between the beams. The beams all have areas of freckled rust and rust scale along the top and bottom flanges and webs. Beam #2 has some bowing and twisting. Beam #3 also bows slightly. The two interior beams are cast into what appears to be the old back wall and are hidden from view. This back wall now acts like diaphragms between the two beams or it could possibly be a bridge seat extension to make up the difference in the size of beams. Bearings are steel plates. There is a large amount of gravel and dirt on the two fascia beams.

Substructure: Both abutments are concrete abutments. There are map cracks along the edges of the stem of abutment #1. There is some areas of rattiness and light spalling along the stem just above the concrete footing that is cast down to ledge. There is spalling adjacent to the ledge as well. There are a few other fine cracks in the stem. Abutment #2 is also a massive concrete abutment. There are some horizontal cracks, which extend up to beam #3 and the downstream end. There are a few diagonal cracks extending off from this horizontal crack. There is some leaking and efflorescence in this crack. There are areas of map cracks on the upstream end. This abutment also appears to be founded on ledge. There is a concrete footing which steps up between beams #3 & #4. There is some spalling down along the bottom in the footing adjacent to a ledge outcrop. The cracks on the downstream end are actually part of the wing. There is small cheek wall extensions on top of the wing. There are stone retainer walls in back of both wings on the downstream side. There are some map cracks in the upstream cheek wall extension. There is also stone riprap in back of abutment #1 upstream wing. There is some stone riprap on the end of abutment #2 and in back of the abutment bank.

Channel: Channel flows rather straight through the structure. There is a large pond just upstream. There is a dam a cross just upstream backing up the water in the pond area. There is ledge outcrops both upstream and downstream in the channel and under the structure. There is vegetation growing along the banks both upstream and downstream.

Posting: This structure is not posted

Summary: **This structure is in good to fair condition. Gravel buildup along the bridge seats should be cleaned off.**

Inspectors: Doane Preedom & Peter Bergeron

DCP618.01

ROUTE TH 14 BRIDGE 7 DISTRICT 5 DATE 6-21-01
TOWN Bolton FEATURE CROSSED Mill Brook
BRIDGE TYPE Rolled Bm Br INSPECTOR DCP+PB

ITEM 72 – APPROACH ALIGNMENT *Problem Areas **Critical Areas

1.	Alignment: Straight abut Sharp to minor curve abut	6
2.	Settlement: Abut. #1 end: None Abut. #2 end: None minor to moderate upgrade	
3.	Rail: Galv std stl Bm Rail Posts: Galv std stl Bm Posts w/offset	
4.	Embankment: OK Blocks	
	Inspector's Condition Rating:	6

ITEM 58 – DECK *Problem Areas **Critical Areas

1.	Wearing Surface: 2x6 Nail Laminated CCA Treated on edge Running Transversely	7
2.	Structural Condition: Few scrapes & slight	
3.	Curbs: (tire wear curbs side clear 4 layer of 2x6 planks)	
4.	Sidewalks: None CCA treated	
5.	Rail: Galv std stl Bm Rail Posts: CCA treated 6x8 deck mounted	
6.	Fascias: OK Timber Post	
7.	Drains/Bleeders: None	
8.	Joint Leakage: None	
9.	Expansion Device: None	
	Inspector's Condition Rating:	7

ITEM 59 – SUPERSTRUCTURE *Problem Areas **Critical Areas

1.	Girders/Beams: 4 Rolled Bm w/ 4 sets channel diaphragms	5
2.	Trusses/Arches: 2 Fascia Bm larger freckled rust & minor rust scale Bm 2 + 3 has moderate twist & bows	
3.	Floor Beams: Fascia beams have slight bows	
4.	Stringers:	
5.	Bearing Devices: Steel Plates Fascia bms & Possibly Bm 2+3	
6.	Portals, Bracing, Etc.:	
7.	Cover Plates: None	
8.	Rivets, Bolts, Welds:	
9.	Paint (Item 211) No Paint	5
10	Collision Damage: Moderate Twist & Bows Bm 2+3 · Slight Fascia Bm	
11.	Alignment of Members: Bow & Twist Bm 2+3 Slight Fascia Bm	
12.	Vibrations, Def. Under Load: None Noted at time of inspection	
13.	FCM Yes ____ No ✓ Comment:	
	Inspector's Condition Rating:	5

ITEM 60 – SUBSTRUCTURE I. Abutments *Problem Areas **Critical Areas

1.	Stem: Conc abats mapcrack on ends	6
2.	Backwalls: Clean where exposed	
3.	Bridge Seats: Large amount of gravel Build up	6
4.	Wingwalls: Mapcracks	
5.	Footings: Few spalls at Ledge/Interface also stem	
6.	Undermining: None Interface	
7.	Settlement: None Ledge	
8.	Piles: None	
		6

ITEM 60 – SUBSTRUCTURE II. Piers *Problem Areas **Critical Areas**

9.	Caps: N	
10.	Bridge Seats:	
11.	Shafts:	
12.	Columns:	
13.	Footings:	
14.	Undermining:	
15.	Settlement:	
16.	Piles: A	
	Inspector's Condition Rating:	6

ITEM 61 – CHANNEL *Problem Areas **Critical Areas**

1.	Channel Scour: None	7
2.	Embankment Erosion: Slight up & down stream	
3.	Drift/Vegetation/Bars: Tree growing along Banks Man made dam Just upstream in the channel	
4.	Alignment: Straight	
5.	Riprap: Behind abats	
6.	Waterway Opening: OK	
	Inspector's Condition Rating:	8

Load Posting Signs?
Abut. #1: _____ Yes _____ No _____ Missing
Abut. #2: _____ Yes _____ No _____ Missing Posted Loading: _____

Posted Vertical Clr: _____ Measured Vertical Clr: _____ _____ _____ ITEM 10 – 10' WIDTH: _____
Lt. Shoulder Centerline Rt. Shoulder

NEEDED: _____ Divers _____ Boat _____ Servi-lift / Staging _____ Ladder

COMMENTS: * Remove gravel build up on the Fascia Bms
Bms 2+3 have moderate Twist & Bows

Bolton, TH 14 Br. 7 **07/21/99**

Structure Type: Steel beam with timber deck bridge over Mill Brook.

Approach: The gravel town highway behind abutment 1 is on a fairly straight alignment with a moderate to steep downgrade overall. Behind abutment 2 there is a moderate right hand horizontal curve. Approach rail is galvanized steel beam on steel beam posts with offsets. It does have some minor collision damage. Approximately 6 feet of the approach roadway was paved directly behind and above each abutment. There is a fair amount of settlement along the gravel at the end of the asphalt shim at abutment 2.

Deck: The transverse nail elaminated CCA treated timber plank decking is in fairly good condition. It does have some light wear along the tops of the planks along with a light build up of sand and gravel. Bridge rail is galvanized steel beam, which is lag bolted to pedestal mounted CCA treated 6 by 8 timber beam posts. Curbing is CCA treated laminated timber planking. Curbing has only some minor scrapes and gouges. Underside of the timber deck is clean.

Superstructure: Superstructure consists of 4 rolled unpainted I-beams with 3 small channel diaphragms per bay. The two interior original stringers are 18 inches deep, while the 24-inch deep fascia beams where added at a later date. The beams and diaphragms are covered with freckled rust. Ends of the beams at each abutment have developed some spots of heavy rust scale with some areas of moderate pitting and minor section loss. Beam #2 does have a fair amount of heavy pitting overall especially at its southern end at abutment 2 where there is some moderate section loss. No holes where found through the steel at this time. Each of the fascia beams are bowed slightly upstream. The two interior beams have random bows and twists to their alignment which probably occurred when the beams where overloaded in the past. All of the beams have little or no camber. Fascia beams rest on rusted radius plate type bearings. Lower halves of the smaller I-beams are incased in concrete at each abutment. It does appear that the beams set on small steel plates in the concrete.

Substructure: Backwalls at each abutment are fairly clean. Bridge seats do have a fair amount of gravel and debris build up along them, which should be removed. There is some spalling directly below beam #3 along the shallow concrete pedestal seat. Beam still has plenty of bearing support. Both abutments are apparently concrete face laid up stone. Stems have only some minor cracks and leaks. Wingwalls have some hairline cracks, leaks and a few small spalls. Top of the downstream footing at abutment 1 does have some heavy spalling with some moderate section loss. Footings at each abutment do have some areas of spalling and scaling along their lower portions just above the streambed where some small voids have developed. Abutment 1 is founded entirely on ledge. Abutment 2 is at least partially founded on ledge.

Bolton, TH 14, Br. 7 (cont) **07/21/99**

Channel: Waterway is on a moderate turn into the structure. Upstream end of abutment #2 is protected with some heavy boulder riprap. Upstream channel is comprised entirely of ledge. There is a small man made cobblestone damn just upstream from the bridge.

Posting: None

Summary: Gravel build up along the bridge seats and along the top of the timber deck should be periodically cleaned.

Inspectors: Matt Joy and John Sladyk

MLJ072199

ROUTE C3TH14 BRIDGE 7 DIST 5 DATE 7/21/99
TOWN Bolton FEATURE CROSSE Mill Brook
BRIDGE TYPE Steel Beam w/ Timber Deck INSPECTOR MJ

ITEM 72 - APPROACH ALIGNMENT *Problem Areas **Critical Areas

1. Alignment: Mod. horiz. (Rt.) hand curve behind abut. #2; Straight behind abut. #1 w/ mod. steep downgrade over	6/1
2. Settlement: Abut. #1 end: Abut. #2 end: Some along gravel	1
3. Rail: Galv. steel Beam w/ offsets - Minor collision damage. Posts: Galv. I-Bm.	
4. Embankment: Some minor erosion	
Inspector's Condition Rating:	6

ITEM 58 - DECK:

1. WearingSurface: Light/mod. build-up of gravel. Light abrasion along tops of planks. Depth:	6
2. StructuralCondition: Nail. lam. trans. CCA treated timber planking.	7
3. Fascias: clean	
4. Curbs: Minor scrapes & gouges	
5. Sidewalks:	
6. Rail: Galv. steel Beam - Good Cond. Posts: 6"x 8" CCA bed. mounted timber posts.	
7. Drains/Bleeders:	
8. Joint Leakage:	
9. Expansion Device:	
Inspector's Condition Rating:	7

ITEM 59 - SUPERSTRUCTURE:

1. Bearing Devices: Rusted radius & flat steel plates.	
* 2. Girders/Beams: (4) rusted (unpainted) I-Bms. 18" deep interior bms. have bows and twists. All beam ends covered w/ some rust scale. Beam #2 does have some mod. section loss near abut. 2.	5
3. Trusses/Arches:	
4. Cover Plates:	
5. Portals, Bracing, Etc.: small channel diaphragms.	
6. Floor Beams:	
7. Stringers:	
* 8. Paint (Item 211): None	5
9. Rust: Freckled rust overall.	
10. Rivets, Bolts, Welds:	
11. Collision Damage: (EXTREME)	
* 12. Alignment of Members: Twists & bows along bms. 2 & 3. Little or no camber	4
13. Vibrations, Def. under Load:	
14. FCM Yes ___ No ✓ Comment:	
Inspector's Condition Rating:	4

Abuts. are Conc. Faced laid-up stone

ITEM 60 - SUBSTRUCTURE I. Abutments

1. Stem: Some hairline cracks & leaks.		7
2. Backwalls: clean		
* 3. Bridge Seats: Gravel build-up. Some spalling below bm. #3 @ abut 2.		6
4. Wings: Minor cracks, spalls.		6
* 5. Footings: Some scaling, spalling & S.C.	Ledge: Abut. #1 fully on ledge. Abut #2 @ least 50% on ledge.	5
6. Piles:		
7. Undermining: small Voids from spalling or const. pour		
8. Settlement: None		

ITEM 60 - SUBSTRUCTURE II. Piers

9. Caps:		
10. Columns:		
11. Footings:	Ledge:	
12. Undermining:		
13. Settlement:		
14. Piles: N/A.		
	Inspector's Condition Rating:	6

ITEM 61 - CHANNEL:

1. Channel Scour: Minor @ upstream end of abut. #2.		
2. Embankment Erosion: Minor		
3. Drift/Vegetation/Bars: coarse gravel bar @ upstream end of abut. #2.		
4. Alignment: Mod. turn into bridge.		
5. Riprap: Some stone protection @ upstream end of abut. #2.		
6. Waterway Opening: OK		
	Inspector's Condition Rating:	7

Load Posting Signs?

Abut. #1: ___ Yes ✓ No ___ Missing

Abut. #2: ___ Yes ✓ No ___ Missing Posted Loading_____ Distance from Br._____

Object Markers? Abut. #1: ___ Yes ✓ No ___ Missing

Abut. #2: ___ Yes ✓ No ___ Missing Other signs:_____

Posted Vertical Clearance: _____ • Measured Vertical Clearance: _____ • _____ • _____

Lt. Shoulder Centerline Rt. Shoulder

ITEM 10 - FOR 10 FOOT WIDTH:_____

NEEDED: _____Divers _____Boat _____Servi-lift/Staging

* Ladder _____Waders

COMMENTS: - Deck's Bridge seats need cleaning.

Bolton, Class 3, T. H. 14, Br. 7 **05/06/97**

Structure Type: Single span steel beam with timber deck bridge over Mill Brook.

Approach: Roadway and bridge are on a steep alignment from south to north. Town highway is gravel and there is a sharp turn onto the structure at the abutment #2 end. Approach rail is galvanized steel beam on steel post with offsets. Approximately 6' of the approaches at each end of the bridge have been paved.

Deck: Nail laminated CCA treated timber. The laminated 2 x 6 curb and heavy timber post are CCA treated as well. All of the timber is fairly new and in good condition. Single steel beam rail is bolted to the timber posts.

Superstructure: Two rolled beams along the fascias as well as two smaller rolled I-beams below the wheel tracks. There are also three small channel diaphragms per bay. Each of the four beams is unpainted. There is some rust overall. Beams at abutment #2 have some rust scale developing along their webs and bottom flanges. At this time, however, the section loss is fairly minimal. Outside beams at each abutment have some heavy gravel build-up around their ends. The two interior beams have quite a bit of twisting and bowing to their alignment. Beam #2 has at least a 3" sweep upstream from mid-span back to abutment #2. Beam #3 has approximately 1" to 2" of sweep downstream at mid-span. Ends of the two interior beams are encased in concrete at each abutment. Exterior beams have steel plate bearings at each abutment.

Substructure: Concrete stem at abutment #1 has some moderate stains and areas of map cracking at its downstream end. It also has some heavy scaling at its downstream end along the footing just above the ledge outcropping. Abutment #2 has some moderate efflorescence leakage and staining at its upstream. There are also a few horizontal fine cracks. The footing has some minor to moderate scaling along the flow line. Both concrete abutments are fairly sound and are bearing on large ledge outcropping.

Channel: Waterway takes a slight to moderate turn through the structure. Stream bed consists of ledge and cobblestone.

Posting: None

Summary: The two interior steel beams have excessive bowing and twisting to their alignment. Since the last inspection a steel beam approach rail has been installed. Also, a single timber plank bridge rail has been replaced with a standard steel beam. Three ton posting sign at abutment #2 end is also gone.

Inspectors: Matt Joy and Jeff Clark

MLJ0505.97

ROUTE C3 TH14 BRIDGE 7 DIST 5 DATE 5-6-97
TOWN BOLTON FEATURE CROSSED MILL BROOK
BRIDGE TYPE SINGLE SPAN STEEL BM INSPECTOR MJ JWC
ITEM 58 - DECK: W/ CCA TIMBER DECK *Problem Areas **Critical Areas

1. WearingSurface: TIMBER - MINOR WEAR	7
2. StructuralCondition: RECENTLY NEW CCA NAIL LAMINATED	
3. Curbs: 2x6's LAMINATED	
4. Sidewalks:	
5. Railing: CCA POSTS w/ SINGLE STEEL BEAM RAIL	
6. Drains:	
7. Joint Leakage:	
8. Expansion Device:	
Inspector's Condition Rating:	7

ITEM 59 - SUPERSTRUCTURE: *Problem Areas **Critical Areas

1. Bearing Devices: SOME RUSTED STEEL PLATES @ FASCIA BEAMS - GENERAL COVERED.	5
* 2. Girders/Beams: 4 BEAMS - INTERIOR HAVE EXCESSIVE BOWING AND SWEEPING.	4
3. Trusses:	
4. Cover Plates:	
5. Portals, Bracing, Etc.: 3 SMALL CONNECT DIAPHRAGMS ONLY BAD	
6. Floor Beams:	
7. Stringers:	
8. Paint: MOSTLY GONE	5
9. Rust: OVERALL w/ SCALES @ ENDS BUT MINOR SECTION LOSS.	
10. Rivets, Bolts, Welds:	
11. Collision Damage:	
* 12. Alignment of Members: POOR EXCESSIVE TWISTS AND BOWS MOST, 2 INTERIOR BEAMS.	4
13. Vibrations, Def. under Load:	
14. FCM Yes____ No ✓ Comment:	
Inspector's Condition Rating:	4

ITEM 60 - SUBSTRUCTURE I. Abutments *Problem Areas **Critical Areas

1. Stem: MINOR MAP CRACKING AND EFFLOR. SOME MOD. LOCALIZED SCALING ALONG FLOW LINE.	6
2. Backwalls: CONC. - OK	
3. Bridge Seats: GRAVEL COVERED @ ENDS.	
4. Wings: OK MAP CRACKS AND STAINS	
5. Footings: MOD. SCALING.	
6. Piles:	
7. Erosion:	
8. Settlement: NONE	

ROUTE C37M4 BRID 7 TOWN Bourbon DIST 5

ITEM 60 - SUBSTRUCTURE II. Piers

9. Caps: N/A	
10. Columns:	
11. Footings:	
12. Scour:	
13. Settlement:	
14. Piles:	
N/A Inspector's Condition Rating:	6

ITEM 61 - CHANNEL: *Problem Areas **Critical Areas

1. Channel Scour: None - Logs	8
2. Embankment Erosion: Some upstream	7
3. Drift/Vegetation:	
4. Alignment: Mod. turn into	
5. Riprap:	
6. Waterway Opening: OK	
Inspector's Condition Rating:	7

ITEM 72 - APPROACH ALIGNMENT *Problem Areas **Critical Areas

1. Alignment: Sharp turn w/ steep up grade from S. to N.	6
2. Approaches: Gravel	
3. Guardrail: Galv. steel beam w/ offsets on steel posts	
4. Embankment: Some wash	
Inspector's Condition Rating:	6

Load Posting Signs in Place? ___ Yes ✓ No ___ Missing Posted Loading_____ Distance from Br._____

Object Markers? ___ Yes ✓ No ___ Missing

Posted Vertical Clearance: _____ • Measured Vertical Clearance: _____ • _____ • _____
Lt. Shoulder Centerline Rt. Shoulder

ITEM 10 - FOR 10 FOOT WIDTH:_____

NEEDED: _____Underwater Inspection _____Boat Inspection _____Servi-lift, Staging, or Sign Truck

* COMMENTS: The two interior beams have excessive bowing and twisting to their alignment.

Since last inspection steel beam bridge rail and steel beam on steel beam posts for approach rail have been installed. 3 tn posting sign has been removed.

BOLTON, T.H. 14, BR. 7 OVER MILL BROOK 6/26/95

APPROACH: Structure is on a downgrade and curve. Approach guide rails consist of painted wooden posts with two painted wood plank rails. The posts and rails show signs of deterioration, especially on the abut. 2 end.

DECK: The deck consists of 2X6's on edge. Wood beam curbs made up of four wood planks extend along both edges. Bridge guide rails consist of wood beam posts with one painted wood plank rail. The rails show some signs of deterioration. The decking, curbs, and guide posts are CCA treated lumber.

SUPERSTRUCTURE: consists of two rolled beam fascia beams and two interior I-beams. The I-beams are badly bowed or twisted. The members have three metal diaphragms per bay. The interior beam ends are cemented in the backwalls at each abutment; bottom flanges of the fascia beams appear to be resting on bearing plates. All members are rusted, with a few small areas of heavy rust scale on the interior beams at the abut. 2 end. Both fascia beams bow upstream approx. 1/2" - 1", while the interior beams have at least 1" - 2" multiple bows and twists.

SUBSTRUCTURE: Abutments, wings, backwalls and footings are conc. There are a few alligator cracks and leaks, with small spalls on the abutment ends and wings, with small voids along the footing bottoms on both right wings. Both abutments are at least partially resting on ledge.

CHANNEL: There is a ledge channel bottom and ledge and boulders showing along the up and downstream channel embankments.

POSTING: Structure is posted on the abut. 2 end only for a bridge limit of 3 tons.

INSPECTORS: Richard Knowlton/Doane Preedom

RWK0626.95

* LETTER WRITTEN 04/10/95

JWN BRIDGE INSPECTION REPO

TOWN BOLTON BR. NO. 7
STR.OVER/~~UNDER~~ WATER CL.RD. 3 T.H.# 14
DATE INSPECTED 06/15/95 INSP.BY BWK, DP

APPROACHES:
RAILS LIGHTWEIGHT, DETERIORATION (ABUT #2 END WORST
ALIGNMENTS DOWNGRADE, CURVE
SETTLEMENT - ABUT. 1 END SLIGHT, GRADED GR.
ABUT. 2 END " " "
EMBANKMENTS VEG., STEEP

REMARKS:

DECK:
RUNNERS NONE
SURFACE 2X6'S ON EDGE, CCA TREATED,
CURBS NAIL LAMINATED → 4 PLANKS
DRAIN OPENINGS NONE
GUIDE RAILS WOOD BM. POSTS (CCA) W/ PAINTED RAILS (SOME DETERIORATION.
JOINTS NONE
SIDEWALKS NONE
PARAPETS N/A
WINDSLOTS N/A
FASCIA WOOD - CCA
SCUPPERS NONE
UNDERSIDE CCA TREATED
VIBRATION MINOR W/ LIGHT LOADS

REMARKS:

SUPERSTRUCTURE:
STRINGERS RUSTED, INTERIOR BMS. BADLY BOWED/TWISTED.
BEARINGS FASCIA BMS. ONLY? DIRT & GR. COVERED
COVER PLATES NONE
DIAPHRAGMS 3/BAY - METAL ALSO A COUPLE OF WOOD PLANKS.
TEE BEAMS N/A
FLOOR BEAMS N/A
PLATE GIRDERS N/A
SIDE GIRDERS N/A
TRUSS N/A

MEMBER ALIGNMENT FASCIA BMS. BOWED UPSTREAM 1/2"-1".
CAMBER SLIGHT IF ANY
PAINT POOR - SOME ON FASCIA BMS. ONLY
RUST OVERALL, INTERIOR BMS. HAVE SOME H.R.S. @ABUT #2.

* REMARKS: THE INTERIOR BMS. ARE BADLY BOWED/TWISTED W/ 1"-2" MULTIPLE (BOWS/TWISTS).

SUBSTRUCTURE:

ABUTMENTS A FEW SM. CRACKS & LEACHS
WINGS ALLIGATOR CRACKS & LEACHS W/ SM. SPALLS
CONC. CAPS NONE
BACKWALLS INTERIOR BMS. CEMENTED INTO
UNDERMINING SMALL VOIDS ALONG BOTTOMS OF FOOTINGS.
SPALLING MOSTLY MINOR
SETTLEMENT ON LEDGE
PILES ON LEDGE
PIER(S) NONE
FOOTING FINE CRACKS W/ A FEW SPALLS/VOIDS ALONG BOTTOMS
ON LEDGE: ABUT. #1 YES ABUT. #2 YES PIER(S) NONE
REMARKS:

CHANNEL:

SCOUR LEDGE SIGNS OF PAST FLOODING
EMBANKMENTS BOULDERS & LEDGE MOSTLY
HYDRAULIC ADEQUACY POSSIBLY ADEQUATE BUT NARROW
GRAVEL BARS MINOR
DEBRIS SM. HOMEMADE STONE DAM UPSTREAM
RIPRAP NOT MUCH SHOWING
REMARKS:

PIPES:

DEBRIS N
BARREL
CAMBER
FOOTING/ABUTMENTS
COVER
WINGS
HEADWALLS
GUIDE RAILS
REMARKS: A

LADDER INSPECTION: NONE DIVER INSPT: NONE
BOAT INSPECTION: NONE WADERS INSPT: YES
SERVI-LIFT INSPECTION: NONE

POSTING SIGNS:
LOAD ABUT #2 END ONLY → POSTED WT. LIMIT - 3 TONS
CLEARANCE
OTHER NONE

OVERALL COMMENTS: BMS. RUSTED, INTERIOR BEAMS ARE BADLY BOWED/TWISTED. FILL SM. VOIDS ALONG BOTTOMS OF FOOTINGS.

Overflow

STATE OF VERMONT
AGENCY OF TRANSPORTATION
133 State Street, Administration Building
Montpelier, Vermont 05633-5001

April 10, 1995

Mr. Gerard A. Mullen, Chair
Bolton Selectboard
c/o Ms. Deborah Lariviere, Town Clerk
RFD#1 Box 291
Jericho, VT 05465

Re: T.H. 14, Br. 7 over Mill Brook

Dear Mr. Mullen:

The Vermont Agency of Transportation inspects all bridges greater than 20 feet in length on a two year cycle to insure their safety for public use. The above referenced bridge in your Town has recently been inspected for 1994, and there are some problems with this bridge.

In a letter sent to the Bolton Selectboard, dated 1/21/92 (see attached copy), we outlined a problem and recommended repairs. As yet, no work has been done, and again we ask that these repairs be made. An additional problem was found during our latest inspection (November 1994), and we recommend the following:

The wood plank decking has areas of fungus growing overall, with some rotten sections and a large gravel buildup on the surface. The entire deck should be replaced with nail laminated 2X6's on edge. Areas of rot were also found in the approach and bridge guide rails; they should be replaced with members of adequate size and strength.

This bridge is owned by the Town, and as such is the responsibility of the Town. However, we have been notified by the Federal Highway Administration that failure by the Town to follow our recommendations on the necessary safety repairs may make the Town ineligible for Federal funding on **any** Town bridge work. Also, we are required by the Federal Highway Administration to report to them when the recommended safety repairs have been completed. Therefore, please complete the response form at the end of this letter as soon as the work is done, and return it as indicated.

Vermont is an Equal Opportunity Employer.

In order to keep our records up-to-date, it is necessary to know that the Town has received and reviewed the information included in this letter. Therefore, please complete and return (within 30 days) the response form at the end of this letter, as indicated.

If you have any questions concerning this matter, please contact District Transportation Administrator John Wood or this office.

Yours truly,

Warren B. Tripp

Warren B. Tripp
Structures Engineer

WBT:kg

c.c. B. Cahoon, Stream Alteration Engineer, ANR
DTA Wood
DEP
Files

Vermont Agency of Transportation
Structures Division
133 State Street - Admin. Bldg.
Montpelier, VT 05633

4/10/95

Re: T.H. 14, Br. 7

The Selectboard of the Town of Bolton has:

1. Made repairs to bridge as recommended in letter of 1/21/92.

2. Replaced entire deck with nail laminated 2X6's on edge, and replaced approach and bridge guide rails.

This work was completed on ______________________.
(Date)

Signatures of Members ______________________

Town of Bolton ______________________

Selectboard ______________________

____

____

^^

Vermont Agency of Transportation
Structures Division
133 State Street - Admin. Bldg.
Montpelier, VT 05633

4/10/95

Re: T.H. 14, Br. 7

The Selectboard of the Town of Bolton has received and reviewed the information regarding Br. 7 contained in letters of above date and 1/21/92.

Signatures of Members ______________________

Town of Bolton ______________________

Selectboard ______________________

____

____

Dated: ______________________

STATE OF VERMONT
AGENCY OF TRANSPORTATION
133 State Street, Administration Building
Montpelier, Vermont 05633

January 21, 1992

Mr. Gerard Mullen, Chairman
Bolton Board of Selectmen
c/o Ms. Ellen Champney, Town Clerk
RFD#1 Box 445
Waterbury, VT 05676

Re: T.H. 14, Br. 7

Dear Mr. Mullen:

The Vermont Agency of Transportation inspects all bridges greater than 20 feet in length on a two year cycle to insure their safety for public use. The above referenced bridge in your Town has recently been inspected, and there are some serious problems with this bridge.

The structure consists of steel stringers with a wood plank deck and runners. The abutments and wings appear to be concrete faced stone, founded on ledge. At the time of inspection, the bridge was posted for a weight limit of 6 tons; however, the sign is vandalized and nearly illegible.

Our inspector reported that the two interior beams have multiple 1" - 3" bows and are tipped or twisted. This is not a new condition; however, in our current effort to complete the load rating of all structures, we have to assume, from an engineering standpoint, that because of the distortion these beams have partially failed.

We recommend the two interior beams be replaced, and, at the same time, the guide rails repaired or replaced with adequate strength members, and the posting sign be replaced. The beams should be of adequate size to allow for legal loads on a wood decked structure. The new beams should have some type of lateral support so that they will not tend to tip and bow in the future.

This bridge is owned by the Town, and as such is the responsibility of the Town. However, we have been notified by the Federal Highway Administration that failure by the Town to follow our recommendations on the necessary repairs may make the Town ineligible for Federal funding on **any** Town bridge work. Also, we are required by the Federal Highway Administration to report to them when the recommended repairs have been completed. Therefore, please complete the response form at the end of this letter as soon as the work is done, and return it as indicated.

Vermont is an Equal Opportunity Employer.

If you have any questions concerning this matter, please contact District Transportation Administrator John Wood or this office.

Yours truly,

Warren B. Tripp

Warren B. Tripp
Structures Engineer

WBT:kg

c.c. B. Cahoon, Stream Alteration Engineer, ANR
DTA Wood
DEL/DEP
Files

Vermont Agency of Transportation
Structures Division
133 State Street - Admin. Bldg.
Montpelier, VT 05633

Re: T.H. 14, Br. 7

Gentlemen:

The Selectmen of the Town of Bolton have:

Replaced two interior beams and added lateral support; repaired/replaced guide rails; and replaced load posting sign.

This work was completed on _____.
(Date)

Signatures of Members _____

Town of Bolton _____

Board of Selectmen _____

_____

_____

** LETTER WRI, 30
FOLLOW-UP 04/05/95

TOWN BRIDGE INSPECTION REPORT

TOWN BOLTON BR. NO. 7
STR.OVER/UNDER WATER CL.RD. 3 T.H.# 14
DATE INSPECTED 11/03/93 INSP.BY RWK, DP

APPROACHES:

RAILS SUBSTANDARD, SM. AREAS OF RUSTING
ALIGNMENTS STEEP DOWN GRADE, CURVED
SETTLEMENT - ABUT. 1 END 12"-8"
ABUT. 2 END 2" 2"
EMBANKMENTS STEEP

REMARKS:

DECK:

* RUNNERS SOME RUSTING & SM. ROTTEN SECTIONS
* SURFACE LARGE GRAVEL & DEBRIS BUILD-UP
CURBS WOOD PLANKS
DRAIN OPENINGS 3/4" GAPS BETWEEN DECK PLANKS
GUIDE RAILS SUBSTANDARD, SM. AREAS OF RUSTING
JOINTS 3/4" OPEN JOINT - ALLOWS GR. INTO BM. ENDS & BRGS.
SIDEWALKS NONE
PARAPETS N/A
WINDSLOTS N/A
* FASCIA RUSTING ON ENDS OF PLANKS
SCUPPERS NONE
* UNDERSIDE RUSTING OVERALL - MUCH
VIBRATION MINOR W/ LIGHT LOADS.

REMARKS:

SUPERSTRUCTURE:

** STRINGERS RUSTED, INTERIOR BMS. HAVE MULTIPLE 2"-3" BOWS & ARCS
BEARINGS FASCIA BMS. ONLY, RUSTED, GR. COVERED | TIPPED OR TWISTED.
COVER PLATES N/A
DIAPHRAGMS 3/BAY
TEE BEAMS N/A
FLOOR BEAMS N/A
PLATE GIRDERS N/A
SIDE GIRDERS N/A
TRUSS N/A

* MEMBER ALIGNMENT INTERIOR BMS. BOWED & TIPPED OR TWISTED.
CAMBER SLIGHT
* PAINT POOR
RUST OVERALL.

REMARKS:

SUBSTRUCTURE:

ABUTMENTS CRACKS & LEAKS W/ SM. SPALLS - BNDS MOSTLY
CONC. CAPS N/A
WINGS CRACKS & LEAKS W/ SM. SPALLS
BACKWALLS MINOR CRACKS
UNDERMINING NONE AS SUCH - SM. VOIDS ALONG FOOTING BOTTOMS.
SPALLING MINOR
SETTLEMENT NONE ON LEDGE
PILES ON LEDGE
PIER(S) NONE
FOOTING MINOR CRACKS & SPALLS
ON LEDGE: ABUT. #1 YES ABUT. #2 YES PIER(S) NONE
REMARKS:

CHANNEL:

SCOUR LEDGE
EMBANKMENTS LEDGE AND BOULDERS
HYDRAULIC ADEQUACY POSSIBLY ADEQUATE
GRAVEL BARS MINOR
DEBRIS MINOR
RIPRAP LEDGE & BOULDERS - ALONG EMBANK. MOSTLY.
REMARKS:

PIPES:

DEBRIS N/A
BARREL
CAMBER
FOOTING/ABUTMENTS
COVER
WINGS
HEADWALLS
GUIDE RAILS
REMARKS:

LADDER INSPECTION: NO DIVER INSPT: NONE
BOAT INSPECTION: NO WADERS INSPT: YES
SERVI-LIFT INSPECTION: NO

POSTING SIGNS:
LOAD WEIGHT LIMIT 3 TONS - ABUT #2 END ONLY
CLEARANCE NO
OTHER NO

OVERALL COMMENTS: REPLACE GUIDERAILS & DECKING IN NEAR FUTURE. REPLACE INTERIOR BMS., PROTECT BM. ENDS FROM GR. BUILD-UP & PAINT SUPERSTRUCTURE.

Structure is on a fairly steep downgrade and curve. Approach guide rails consist of painted wooden posts with two painted wood plank rails. The deck consists of wood planks and runners. The surface has a large dirt and debris buildup. The ends of the deck planks have some fungus growing, and the runner planks show signs of deterioration, with small rotten areas. Bridge guide rail consists of painted wood posts with two painted wood plank rails. Fungus is growing overall on the underside of the decking, especially below the runner planks. The decking has 3/4" gaps between each plank, and fungus can be seen on the other side of the runner planks in these gaps. Superstructure consists of two rolled beam fascia stringers, with two interior I-beams. The I-beam ends are cemented in the backwalls at each abutment. There are three diaphragms per bay. The I-beams have 2" - 3" multiple bows, and are tipped or twisted. All beams have rust overall. The fascia beam ends appear to be resting on bearing plates with bolted brackets around their flanges. Abutments, wings, backwalls, and footings are concrete. There are a few alligator cracks and leaks, and small spalls, on the ends and wings mostly. Both abutments are resting on ledge, with a ledge channel bottom, and ledge and boulders along the up and downstream channel embankments. A sign on the abut. 2 end only states: "Posted Bridge Limit - 3 Tons".

RWK1101.93

STATE OF VERMONT
AGENCY OF TRANSPORTATION
133 State Street, Administration Building
Montpelier, Vermont 05633

Called 2-19-92 RMT

January 21, 1992

Mr. Gerard Mullen, Chairman
Bolton Board of Selectmen
c/o Ms. Ellen Champney, Town Clerk
RFD#1 Box 445
Waterbury, VT 05676

Re: T.H. 14, Br. 7

Dear Mr. Mullen:

The Vermont Agency of Transportation inspects all bridges greater than 20 feet in length on a two year cycle to insure their safety for public use. The above referenced bridge in your Town has recently been inspected, and there are some serious problems with this bridge.

The structure consists of steel stringers with a wood plank deck and runners. The abutments and wings appear to be concrete faced stone, founded on ledge. At the time of inspection, the bridge was posted for a weight limit of 6 tons; however, the sign is vandalized and nearly illegible.

Our inspector reported that the two interior beams have multiple 1" - 3" bows and are tipped or twisted. This is not a new condition; however, in our current effort to complete the load rating of all structures, we have to assume, from an engineering standpoint, that because of the distortion these beams have partially failed.

We recommend the two interior beams be replaced, and, at the same time, the guide rails repaired or replaced with adequate strength members, and the posting sign be replaced. The beams should be of adequate size to allow for legal loads on a wood decked structure. The new beams should have some type of lateral support so that they will not tend to tip and bow in the future.

This bridge is owned by the Town, and as such is the responsibility of the Town. However, we have been notified by the Federal Highway Administration that failure by the Town to follow our recommendations on the necessary repairs may make the Town ineligible for Federal funding on **any** Town bridge work. Also, we are required by the Federal Highway Administration to report to them when the recommended repairs have been completed. Therefore, please complete the response form at the end of this letter as soon as the work is done, and return it as indicated.

Vermont is an Equal Opportunity Employer.

If you have any questions concerning this matter, please contact District Transportation Administrator John Wood or this office.

Yours truly,

Warren B. Tripp

Warren B. Tripp
Structures Engineer

WBT:kg

c.c. B. Cahoon, Stream Alteration Engineer, ANR
DTA Wood
DEL/DEP
Files

Vermont Agency of Transportation
Structures Division
133 State Street - Admin. Bldg.
Montpelier, VT 05633

Re: T.H. 14, Br. 7

Gentlemen:

The Selectmen of the Town of Bolton have:

Replaced two interior beams and added lateral support; repaired/replaced guide rails; and replaced load posting sign.

This work was completed on _____.
(Date)

Signatures of Members _____

Town of Bolton _____

Board of Selectmen _____

_____

_____

Structure is on a downgrade with a corner onto abut. 2. Approach guide rails consist of wood posts with two wood plank rails. There's a section of both rails missing near the right end of abut. 1. The posts and rails show signs of deterioration. Deck consists of wood planks with wood runners. There's a slight gravel buildup on the surface. The runners are slightly worn. Bridge guide rail consists of wood beam posts with two wood plank rails. There are minor areas of fungus on the underside of the decking. Superstructure consists of two rolled beam fascia beams with two I-beams in between. There are three wood plank diaphragms in each bay. The ends of the two interior I-beams are partially cemented in the backwalls at each abutment. The ends of the fascia beams are resting on bolted bearing plates, with brackets around their bottom flanges. The members have rust overall, with small areas of heavy rust scale. The ends of the fascia beams are partially dirt and vegetation covered, especially at abut. 2. The interior I-beams have multiple bows of 1" - 3", and are also tipped or twisted. The abutments, wings, backwalls and footings are concrete or possibly concrete faced laid up stone. Laid up stone retainer walls are showing at each abutment. There are a few fine cracks and small leaks overall, including horizontal pourline cracks, with random small spalls, especially in the abut. 1 footing. There are spalls along the bottom of the footings on each abutment, especially at their right ends. There is an 18" by 5" deep undermined section, 2' from the right end of abut. 1. The section is on ledge, and appears to be an opening for either a free-flowing spring or simply the drainage which accumulates behind the abutment. Both abutments are resting on ledge; there is a ledge channel bottom, with ledge and boulders along the up and downstream channel embankments. There is a sign on the abut. 2 end only which posts the road for a weight limit of 6 tons. However, the sign is badly vandalized, with bullet holes, and illegible at present. There is a coarse gravel bar in the upstream channel which splits the channel flow, and there is also a small homemade stone dam across the entire channel.

offsystem.708 - Knowlton

. ? LETTERS WRITTEN 01-09-9

TOWN BRIDGE INSPECTION REPORT

TOWN Bolton BR. NO. 7
STR.OVER/UNDER Water CL.RD. 3 T.H.# 14
DATE INSPECTED 07-10-91 INSP.BY Rwk

APPROACHES:
RAILS Short; substandard, both rails missing near Bt. end abut. *1
ALIGNMENTS Downgrade, curve
SETTLEMENT - ABUT. 1 END 1/2" bump onto runners
ABUT. 2 END 1 1/2"-2"
EMBANKMENTS Steep

* REMARKS: Signs of deterioration in guardrails

DECK:
RUNNERS Slightly worn
SURFACE Slight gr. buildup
CURBS None
DRAIN OPENINGS 3/4"-1" gaps between decking
GUIDE RAILS Lightweight
JOINTS 3/4"-1" gaps between deck planks
SIDEWALKS None
PARAPETS N/A
WINDSLOTS N/A
FASCIA Wood
SCUPPERS None
UNDERSIDE Sm. areas of fungus
VIBRATION Some w/ light loads

REMARKS:

SUPERSTRUCTURE:
* STRINGERS Two interior I-bms have multiple 1"-3" bows & are tipped or twisted
BEARINGS Bearing plates rusted & partially dirt covered
COVER PLATES None
DIAPHRAGMS 3 wood plank sections per bay
TEE BEAMS N/A
FLOOR BEAMS N/A
PLATE GIRDERS N/A
SIDE GIRDERS N/A
TRUSS N/A

MEMBER ALIGNMENT Poor. Multiple bows of 1"-3" on int. bms.
CAMBER Slight if any
PAINT Poor
RUST Overall w/ sm. areas of H.R.S.

REMARKS:

SUBSTRUCTURE:

ABUTMENTS FINE CRACKS & CRACKS w/ SM. SPALLS
WINGS CONC. RETAINER WALLS & LAID-UP BOULDER EXTENSIONS
BACKWALLS MINOR CRACKS & SPALLS
* UNDERMINING 18" X 5" DEEP SECTION 8' FROM RT. END ABUT #1 - ACTS AS DRAINAGE OUTLET
SPALLING SM. AREAS OVERALL w/ DEEP SPALLS ALONG BOTTOMS of FOOTING
SETTLEMENT NONE ON CRACKS
PILES NONE SEEN
PIER(S) NONE
FOOTING CRACKS & CRACKS w/ SPALLS & VOID @ RT. END ABUT #1
ON LEDGE: ABUT. #1 YES ABUT. #2 YES PIER(S) NONE
REMARKS: ABUTS. & RETAINER WALLS ARE POSSIBLY CONC. FACED STONE

CHANNEL:

HYDRAULIC ADEQUACY SOME COBBLE, BOULDER & GR. RESTRICTIONS
GRAVEL BARS COARSE BAR UPSTREAM BLOCKS 1/2 THE FLOW
DEBRIS BOULDERS MOSTLY HOUSEHOLD STOLD DAM ACROSS UPSTREAM CHANNEL
RIPRAP LEDGE & BOULDERS
REMARKS:

PIPES:

BARREL
CAMBER
FOOTING/ABUTMENTS
COVER
WINGS
HEADWALLS
REMARKS:

LADDER INSPECTION: N/A DIVER INSPT: N/A
BOAT INSPECTION: N/A WADERS INSPT: N/A
SERVI-LIFT INSPECTION: N/A

POSTING SIGNS:
LOAD WEIGHT LIMIT 6 TONS - ABUT #2 END ONLY - SIGN BADLY VANDALIZED (ILLEGIBLE)
CLEARANCE
OTHER N/A

OVERALL COMMENTS: SEE INDIVIDUAL COMMENTS. APPROACH GUIDE-RAILS NEED REPAIR. IT WOULD BE HARD TO DETERMINE HOW MUCH LOAD THE INTERIOR BMS. COULD CARRY. REPLACE POSTING SIGN.

TOWN BRIDGE INSPECTION REPORT

TOWN Bolton BR. NO. 7
STR.OVER/UNDER WATER CL.RD. 3 T.H.# 14
DATE INSPECTED 10-3-89 INSP.BY RWK

APPROACHES:
RAILS LIGHT WEIGHT, SHORT
ALIGNMENTS FAIR-POOR STEEP DOWNGRADE, SHARP CORNER
SETTLEMENT - ABUT. 1 END 1/2"
ABUT. 2 END 1/2"
EMBANKMENTS FAIR STEEP

REMARKS:

DECK:
RUNNERS SLIGHT DETERIORATION
SURFACE " GR. BUILD-UP
VIBRATION MINOR W/ LIGHT LOADS
UNDERSIDE GOOD
FASCIA WOOD
SCUPPERS NONE
GUIDE RAILS LIGHT WEIGHT
JOINTS NONE
CURBS NONE
DRAIN OPENINGS NONE
SIDEWALKS NONE
PARAPETS N/A
WINDSLOTS N/A

REMARKS:

SUPERSTRUCTURE:
PLATE GIRDERS N/A
BEARINGS BOLTED PLATES FOR FASCIA BMS. - RUSTED & DIRT COVERED
STRINGERS MULTIPLE BOWS IN INTERIOR BMS. (2"-3" IN BM. #3)
DIAPHRAGMS POOR - 3 WOOD PLANKS PER BAY
TEE BEAMS N/A
FLOOR BEAMS N/A
SIDE GIRDERS N/A
TRUSS N/A

MEMBER ALIGNMENT INTERIOR BMS. ARE TWISTED W/ MULTIPLE BOWS.
CAMBER SLIGHT IF ANY
PAINT FAIR-POOR
RUST SOME RUST OVERALL W/ H.R.S. ON INTERIOR BMS.
COVER PLATES NONE

REMARKS:

SUBSTRUCTURE:

ABUTMENTS MINOR CRACKS & LEACS
WINGS SHORT - POSSIBLY CONC. FACED STONE
BACKWALLS PARTIALLY DIRT & GR. COVERED
UNDERMINING NONE AS SUCH - A FEW SPALLS
SPALLING MOSTLY SURFACE
SETTLEMENT NONE ON LEDGE
PILES NONE SEEN
PIER(S) NONE
FOOTING SPALLING W/ CRACKS & LEACS ON RT. END ABUT. #1
ON LEDGE ABUT. #1 YES ABUT. #2 YES PIER (S) NONE
REMARKS:

CHANNEL:

HYDRAULIC ADEQUACY FAIR RESTRICTED W/ BOULDERS & LEDGE (SOME)
GRAVEL BARS BOULDERS MOSTLY
DEBRIS LOW, HOMEMADE STONE DAM JUST UPSTREAM
RIPRAP A FEW BOULDERS @ ENDS OF ABUTS.
REMARKS:

PIPES:

BARREL N
CAMBER
FOOTING/ABUTMENTS
COVER
WINGS
HEADWALLS
REMARKS: A

LADDER INSPECTION:
BOAT INSPECTION: NONE
SERVI-LIFT INSPECTION: NONE
DIVER INSPT:
WADERS INSPT: NONE

POSTING SIGNS:
* LOAD 6 TONS - ABUT. #2 END ONLY - VANDALIZED - NOT LEGIBLE
CLEARANCE NONE
OTHER NONE DEAD END

OVERALL COMMENTS: SEE INDIVIDUAL COMMENTS.

TOWN BRIDGE INSPECTION REPORT

TOWN BOLTON BR. NO. 7 T.H. NO. C0.3, T114

STRUCTURE OVER/UNDER WATER

DATE INSPECTED 8-04-87 INSP. BY RWK

APPROACHES:

RAILS FAIR
ALIGNMENTS FAIR
SETTLEMENT -
ABUT. 1 END 1/2"
ABUT. 2 END 1"-3" GRAVEL WASHING OUT BEHIND BACKWALL
EMBANKMENTS FAIR TRIM VEGETATION

REMARKS:

DECK:

SURFACE SOME FUNGUS
UNDERSIDE FUNGUS
FASCIA WOOD
GUIDERAILS FAIR
JOINTS N/A
CURBS NONE

REMARKS: ALL WOOD MEMBERS CREOSOTED

SUPERSTRUCTURE:

PLATE GIRDERS N/A
BEARINGS PLATES FOR FASCIA BEAMS ONLY
STRINGERS FAIR - BOTH INTERIOR BEAMS HAVE MULTIPLE 2"-3" BOWS
FLOOR BEAMS N/A
TRUSS N/A

MEMBER ALIGNMENT FAIR-POOR
CAMBER SLIGHT REVERSE
VIBRATION SOME
PAINT POOR FASCIA BEAMS POSSIBLY A-588
RUST COMPLETELY W/ SMALL AREAS H.R.S.

REMARKS:

SUBSTRUCTURE:

ABUTMENTS FAIR-GOOD FEW CRACKS & LEAKS
WINGS NONE AS SUCH
BACKWALLS GOOD
UNDERMINING BOTH RT. ENDS SLIGHTLY UNDERMINED-SPALLED
SPALLING SURFACE
SETTLEMENT NONE
PILES N/A
PIERS N/A
MULTIPLE
DEBRIS LEDGE OUTCROPS
HYDRAULIC ADEQUACY FAIR-GOOD

REMARKS:

PIPES:

BARREL N/
CAMBER
FOOTING/ABUTMENTS
COVER
WINGS

REMARKS: A

LADDER INSPECTION: POSSIBLY
BOAT INSPECTION: NONE
SERVI-LIFT INSPECTION: NONE

POSTING SIGNS:
LOAD 6 TONS - ON ABUT. #2 END ONLY
CLEARANCE
OTHER NONE

OVERALL COMMENTS: DECKING DETERIORATED W/ FUNGUS GROWING ON TOP & BOTTOM. TWO INTERIOR BEAMS HAVE MULTIPLE 2"-3" BOWS. VEG. @ CORNERS COULD BE TRIMMED BACK.

BRIDGE INSPECTION SHEET
OFF - SYSTEM BRIDGES

Inspected by: _____

Highway No. Cl. 3, TH 14
Bridge No. 7
Bridge Code No. 09010007
Town BOLTON

ABUT. #2 | TO Cl 2, TH 2 | ABUT. #1

90 Deck

Wearing Surface	Structural Condition	Curbs Walks	Railing	Drains	Fixed Joint	Expantion Joint	Type Joint
5	4		3				

Remarks: RAIL COMPLETELY ROTTEN, DECK (4 NEW BOARDS) ROTTEN, NEEDS ATTENTION, DECK DOESN'T HAVE RUNNERS

91 Superstructure

Supporting Members	Bracing	Paint Cond.	Year Painted	Alignment	Bearings Abut 1	Bearings Piers	Bearings Abut 2
5		6		7	6	WOOD	6

Remarks: BEAMS RUSTED BUT NOT HEAVY SCALE, STRINGERS HAVE FUNGUS GROWING, BOLTED ENDS, PLATES RUSTED

92 Substructure

Walls	Stem	Bearing Seats	Erosion	Pier Caps	Pier Column	Bearing Seats	Erosion	Wings Abut 1	Wings Abut 2
7	7	7	7					7	7

Remarks: NOT TOO BAD, MOSS GROWING ON WINGS & ABUTS, FEW CRACKS MINOR SPALLING

93 Channel

Scour	Obstructions	Embankment	Riprap	Adequacy
7	7	7		8

Remarks: NOT TOO BAD

94 Culverts

Barrel	Wings	Apron	Debris	Embankment	Channel Inlet	Channel Outlet

Remarks:

95 Approach

Vertical Alignment	Horizontal Alignment	Approach Rial	Approach Pavement	Approach Embankment
6	6	6	N	6

Remarks: ON A HILL (MOD.) WITH SLIGHT CORNER ONTO ABUT #2

98 & 103 Estimated Remaining Life 005 STRU 01 DECK General Remarks: ALOT OF ROTTEN WOOD

Road Posted Yes [ ] No [X] Limit [ ] Traffic Volume LOW

Date Inspected	Suggested Field Rating	H-5	H-10	H-15	HS-20	Remarks
05-11-79		X				MAYBE LOWER - SHOULD BE POSTED
- -						
- -						

VERMONT AGENCY OF TRANSPORTATION
BRIDGE INSPECTION
LOAD RATING

Route: TH 14 Br. # 7 Rated by: M. Garcia Date: 5-13-96

Town Name: Bolton Checked by: RMT Date: 6/6/96

Coded by: MMG Date: 6/17/96

Analysis Type: LOAD FACTOR or (WORKING STRESS)

Structure Type: Nail Laminated Timber Deck on Steel Beams.
Controlling Feature: Interior Beams.
Comments:

RATING BOX

RATING LEVEL	TRUCK						
	H 20	HS 20	3S2	6 AXLE	3 AXLE	4 AXLE	5 AXLE
Inventory		23					
Posting	20		39		23	24	39
Operating	*	34	45	43			

*Code NBI Item 70 - Bridge Posting: 4 or (5)

Some assumptions made:

[✓] All components in like new condition
[✓] All components are adequate to transfer loads in rating box
[✓] Substructure is sound
[✓] Other assumptions: Twisted/Bowed beams braced adequately enough to carry loads as if straight.

Item 210 - Weight of Structural Steel: 6 tons

Note to user: Spread sheet load rates steel stringers with timber deck. Working knowledge of load rating stringers and review of user notes needed prior to use of this spreadsheet.

PROJECT: **BOLTON TH14 BR7** USER **GARCIA** 03:48 PM

STRUCTURAL DATA INTERIOR(1) OR EXTERIOR(2) STRINGER: **1** INTERIOR

TIMBER DECK THICKNESS (IN):	**6**	STRINGER WEIGHT (LBS/LF)	**70**
PAVEMENT THICKNESS (IN):	**0**	STRINGER DEPTH (IN)	**18.00**
MISC. DEAD LOAD (K/LF/BM):	**0**	STRINGER AREA (IN^2)	**20.46**
C-C STRINGER BEARINGS (FT):	**35**	MOMENT OF INERTIA (IN^4)	**917.5**
UNBRACED LENGTH (FT):	**0**	TOP FLANGE WIDTH (IN)	**6.25**
STRINGER SPACING (FT):	**3.67**	BEAM YIELD STRENGTH (KSI)	**30**
AASHTO DISTR. FACT. S/???:	**5**	ESTIMATED % SECTION LOSS	**0**

OUTPUT:

TOTAL DEAD LOAD (K/LF)	=	0.16
LIVE LOAD IMPACT FACTOR	=	1.30
WHEEL LINES PER BEAM	=	0.73

INVENTORY STRESS	=	.55*Fy=	16000.00	PSI
POSTING STRESS	=	.67*Fy=	20000.00	PSI
OPERATING STRESS	=	.75*Fy=	22500.00	PSI

LOADING	MOMENT (ft-K)	STRESS (psi)
DEAD LOADS.....	24.77	2915.467
H20 TRUCK (20 TONS).....	141.34	16636.84
HS20 TRUCK (36 TONS).....	172.33	20284.99
3S2 (36 TONS).....	130.73	15387.84
6 AXLE TRAILER (66 TONS)..	254.77	29989.44
3 AXLE STRAIGHT (30 TONS).	184.96	21772.11
4 AXLE STRAIGHT (34 TONS).	201.69	23741.64
5 AXLE SEMI (38 TONS).....	138.65	16320.66

LOAD RATINGS IN TONS:

	H20	HS20	3S2	6AXLE	3AXLE	4AXLE	5AXLE
INVENTORY	15.7	23.2	30.6	28.8	18.0	19.0	30.4
POSTING	20.5	30.3	39.9	37.6	23.5	24.8	39.7
OPERATING	23.5	34.7	45.8	43.1	26.9	28.4	45.6

****
Note to user: Spread sheet load rates various timber decks according to AASHTO,NDS, and VAOT. See user notes for more information.
****

PROJECT: **BOLTON TH14 BR7** USER: **GARCIA** 03:41 PM

****

STRUCTURAL DATA:

ARE PLANKS TRANSVERSE (1) OR LONGITUDINAL (2)?.....	1	.....
ARE PLANKS FLAT (1),ON EDGE (2) OR NAIL LAM. (3)?....	3	.....
GAP BETWEEN PLANKS IF ANY?.....	0.00	INCHES
PLANK DIMENSIONS: WIDTH?.....	6.00	INCHES
THICKNESS?.....	1.88	INCHES
CONTINUOUS OVER MORE THAN 2 SPANS?.YES(1),NO(2).....	1	.....
STRINGER OF FLOORBEAM SPACING (C-C)?.(S<96 IN ONLY)..	54.00	INCHES
WIDTH OF TOP FLANGE OF SUPPORT?.....	6.25	INCHES
RUNNER THICKNESS? (ENTER 0 IF NONE).....	0.00	INCHES
PAVEMENT THICKNESS IF ANY?.....	0.00	INCHES
ALLOWABLE BENDING STRESS OF TIMBER (Fb)?.....	1250	PSI
ALLOWABLE SHEAR STRESS OF TIMBER (Hv)?.....	85	PSI
MOISTURE REDUCTION FACTOR IN BENDING? (1 IF NONE)....	0.86	.....
MOISTURE REDUCTION FACTOR IN SHEAR? (1 IF NONE).....	0.97	.....
SHEAR STRESS MODIFICATION FACTOR?.....	2	.....
MISC. DEAD LOAD PER PLANK?.....	0	LBS/IN.

****

OUTPUT:

SPAN LENGTH (AASHTO 3.25)= 50.88 INCHES
EFFECTIVE DECK SECTION MODULUS = 126.00 IN^3
WHEEL DISTRIBUTED AS PER USER NOTES
FLAT USE BENDING FACTOR = N/A

INVENTORY STRESS:	SHEAR=	164.90 PSI	BENDING=	1075.00 PSI
POSTING STRESS:	SHEAR=	195.92 PSI	BENDING=	1277.24 PSI
OPERATING STRESS:	SHEAR=	219.32 PSI	BENDING=	1429.75 PSI

LOADING	SHEAR STRESS	BENDING STRESS
DEAD LOADS.....	0.84 PSI	7.49 PSI
H20 TRUCK (20 TONS).....	101.69 PSI	804.09 PSI
HS20 TRUCK (36 TONS).....	101.69 PSI	804.09 PSI
3S2 (36 TONS).....	70.77 PSI	556.24 PSI
6 AXLE TRAILER (66 TONS)..	101.69 PSI	804.09 PSI
3 AXLE STRAIGHT (30 TONS).	101.69 PSI	804.09 PSI
4 AXLE STRAIGHT (34 TONS).	82.63 PSI	650.97 PSI
5 AXLE SEMI (38 TONS).....	74.76 PSI	588.07 PSI

LOAD RATINGS IN TONS: BENDING CONTROLS

	H20	HS20	3S2	6AXL	3AXL	4AXL	5AXL
INVENTOR	26.55	47.79	69.09	87.62	39.83	56.58	68.98
POSTING	31.58	56.85	82.18	104.22	47.37	67.29	82.05
OPERATIN	35.38	63.68	92.05	116.74	53.06	75.38	91.90

****

LOAD RATING ASSUMES PLANKS ARE IN EXCELLENT CONDITION.

Note to user: Spread sheet load rates steel stringers with timber deck. Working knowledge of load rating stringers and review of user notes needed prior to use of this spreadsheet.

PROJECT: **BOLTON TH14 BR7** USER **GARCIA** 04:05 PM

STRUCTURAL DATA INTERIOR(1) OR EXTERIOR(2) STRINGER: **2** EXTERIOR

TIMBER DECK THICKNESS (IN):	6	STRINGER WEIGHT (LBS/LF)	73.5
PAVEMENT THICKNESS (IN):	0	STRINGER DEPTH (IN)	24.00
MISC. DEAD LOAD (K/LF/BM):	0.056	STRINGER AREA (IN^2)	21.47
C-C STRINGER BEARINGS (FT):	35	MOMENT OF INERTIA (IN^4)	2091
UNBRACED LENGTH (FT):	0	TOP FLANGE WIDTH (IN)	9
FASCIA STRING SPACING (FT):	2.83	BEAM YIELD STRENGTH (KSI)	30
CURB TO C/L STRINGER (FT):	0.27	ESTIMATED % SECTION LOSS	0

OUTPUT:

TOTAL DEAD LOAD (K/LF)	=	0.20
LIVE LOAD IMPACT FACTOR	=	1.30
WHEEL LINES PER BEAM	=	0.39

INVENTORY STRESS	=	.55*Fy=	16000.00	PSI
POSTING STRESS	=	.67*Fy=	20000.00	PSI
OPERATING STRESS	=	.75*Fy=	22500.00	PSI

LOADING	MOMENT (ft-K)	STRESS (psi)
DEAD LOADS.....	30.66	2111.675
H20 TRUCK (20 TONS).....	74.85	5154.325
HS20 TRUCK (36 TONS).....	91.26	6284.573
3S2 (36 TONS).....	69.23	4767.367
6 AXLE TRAILER (66 TONS)..	134.92	9291.147
3 AXLE STRAIGHT (30 TONS).	97.95	6745.303
4 AXLE STRAIGHT (34 TONS).	106.81	7355.491
5 AXLE SEMI (38 TONS).....	73.42	5056.367

LOAD RATINGS IN TONS:

	H20	HS20	3S2	6AXLE	3AXLE	4AXLE	5AXLE
INVENTORY	53.8	79.5	104.8	98.6	61.7	65.1	104.3
POSTING	69.4	102.4	135.0	127.0	79.5	83.9	134.4
OPERATING	79.1	116.7	153.9	144.8	90.6	95.6	153.2

BY _____ DATE _____ SUBJECT _____ SHEET NO. _____ OF _____

CHKD. BY _____ DATE _____ JOB NO. _____

ROUTE NO. CL.3, TH14 BRIDGE NO 7

TOWN BOLTON

INSPECTORS RWK, DP

DATE 06/15/95

PAVEMENT THICKNESS - NONE

SAME BMS. USGD

BEAM DETAILS

OUT - OUT - 12.0'

CURB - CURB - 10' 8 1/2"

RIVET HOLE ϕ =

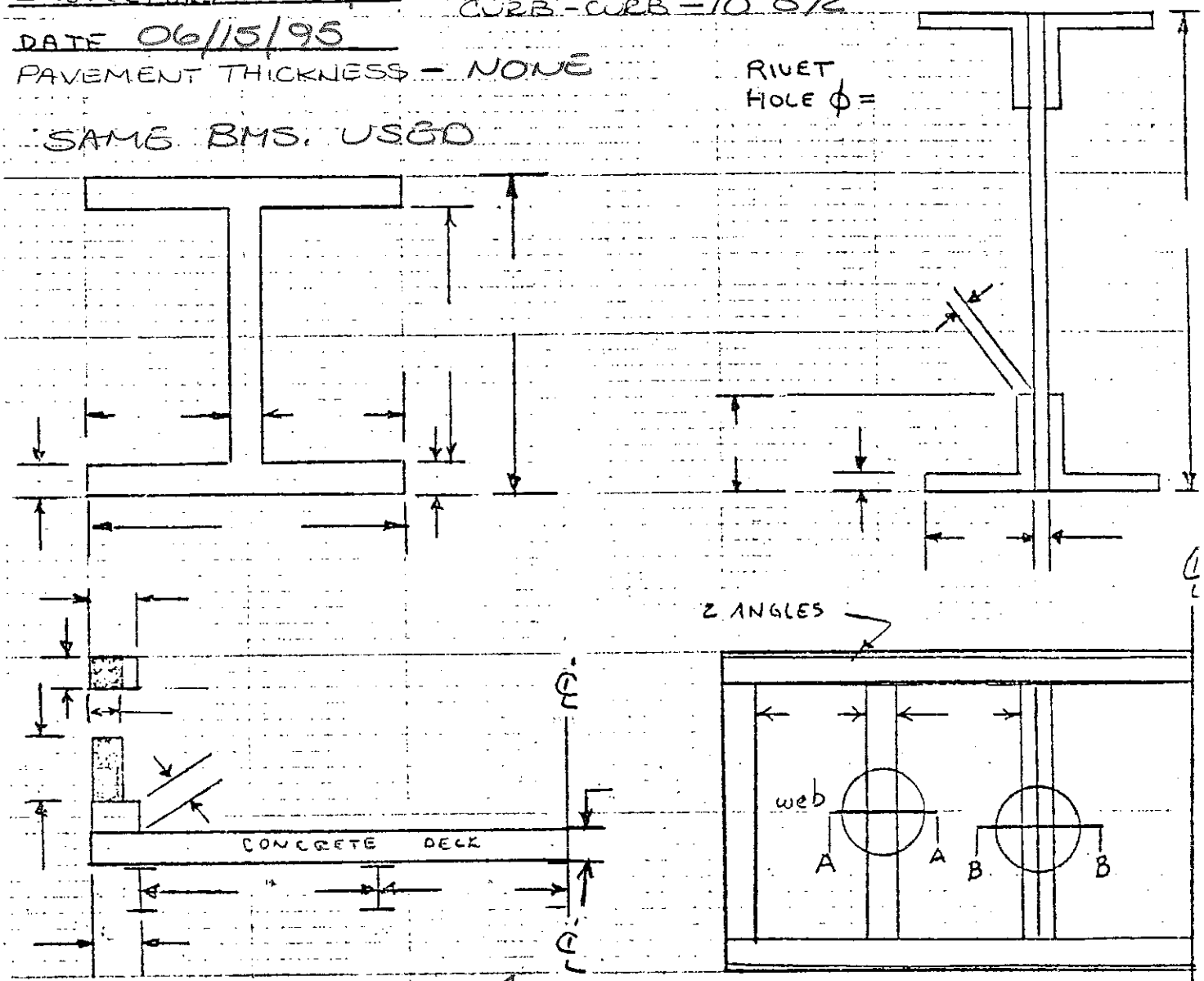

NUMBER OF BEAMS 4

BEAM LENGTH C-C BEARING 35'

COVER PLATE: THICKNESS _____

WIDTH _____

SIDE VIEW FOR RIVET SPACING

RAIL POST SPACING C-C _____

REMARKS _____

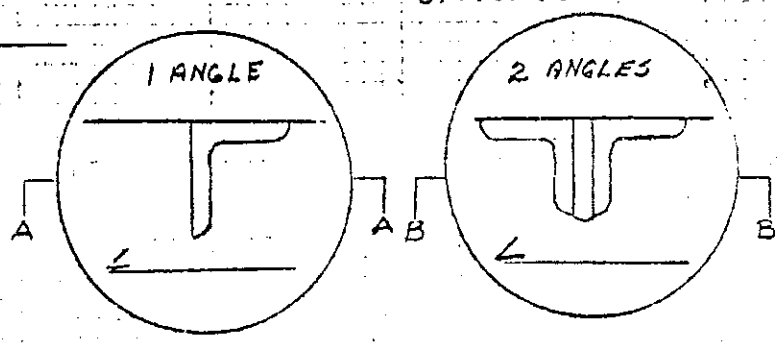

NEW CCA TREATED 2X6'S ON 60CC
APPEAR TO BE NAIL LAMINATED

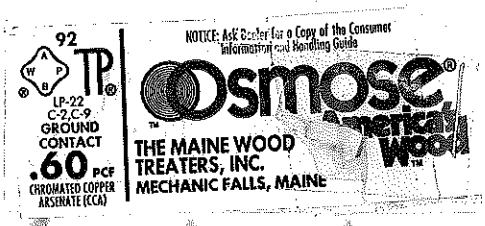

USED ON DECK

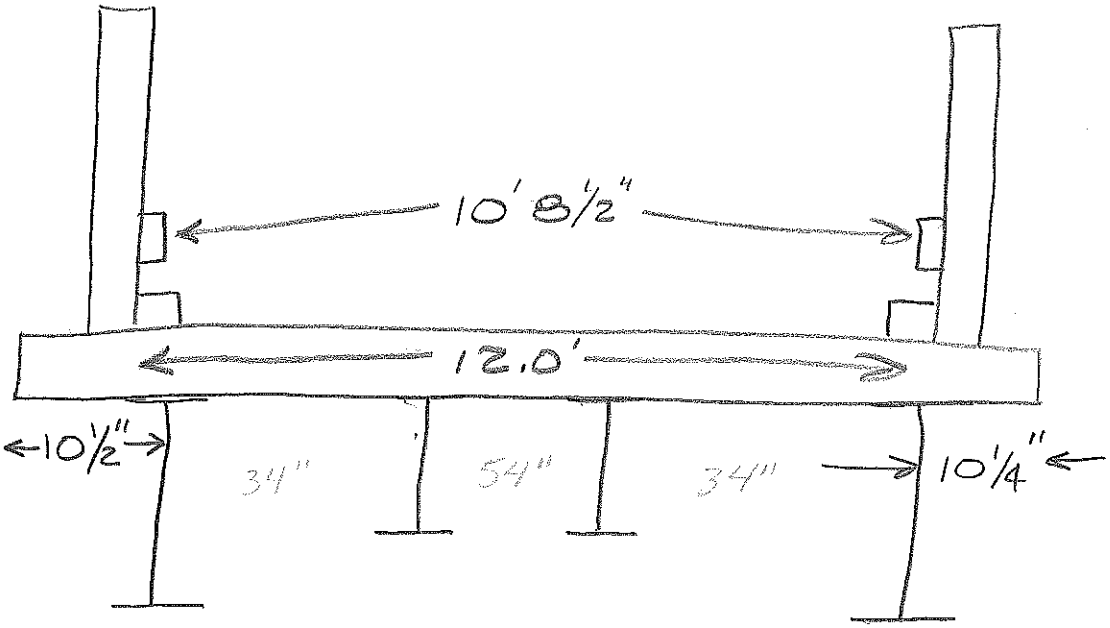

SIZE OF DECK PLANKS → 1⅞" - 2" X 6"

USED ON CURBS ONLY

BY _____ DATE _____ SUBJECT _____ SHEET NO. _____ OF _____

CHKD. BY _____ DATE _____ JOB NO. _____

ROUTE NO. TH 14

BRIDGE NO 7

TOWN BOLTON

INSPECTORS AR & RWK

DATE 7-10-91

PAVEMENT THICKNESS —

BEAM DETAILS

OUT - OUT — 12' 1"

CURB - CURB — 10' 4"

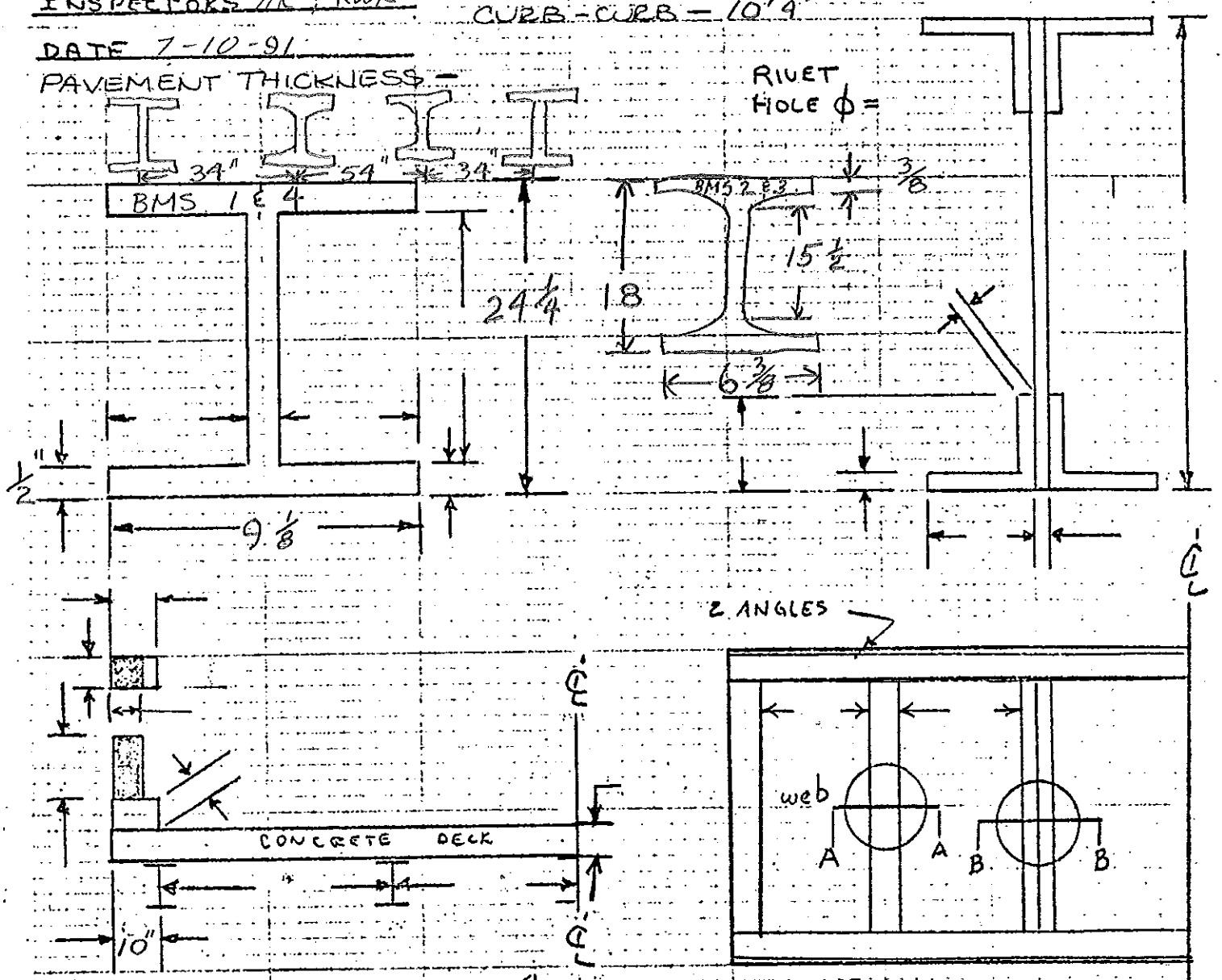

NUMBER OF BEAMS 4

BEAM LENGTH C-C BEARING _____

COVER PLATE: THICKNESS _____

WIDTH _____

SIDE VIEW FOR RIVET SPACING

RAIL POST SPACING C-C _____

REMARKS 3x4" POSTS WITH 2 - 2x6" RAILS

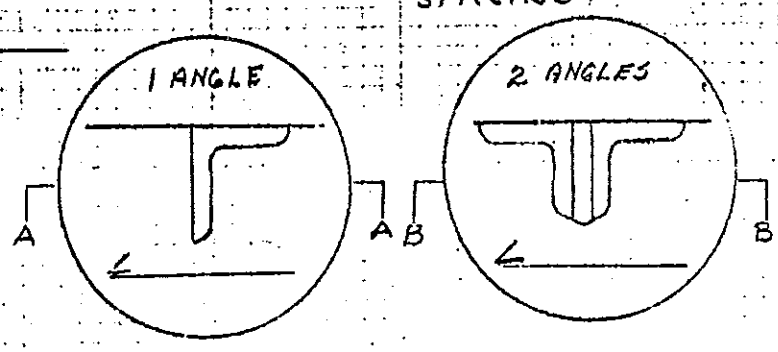

DECK PLANKS- $3 \times 7\frac{3}{4}$"

RUNNER PLANKS- $9\frac{3}{4} \times 1\frac{1}{2}$" PLANKS

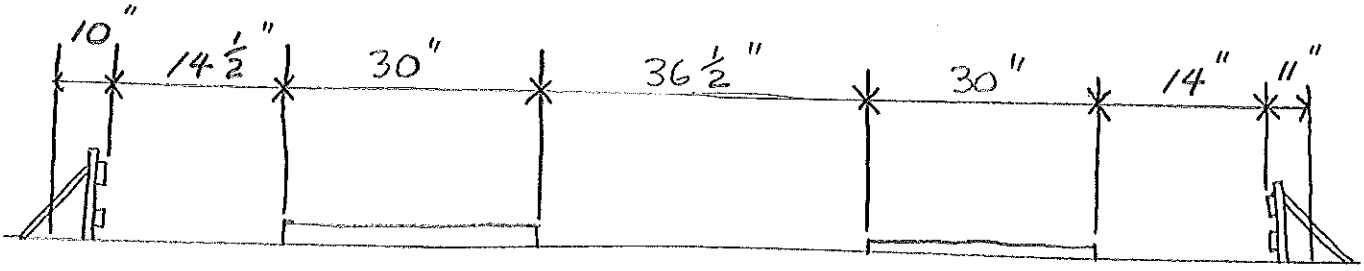

* POOR CONDITIONS (I-BEAMS)

✓ MLJ91

WOOD DECK INFORMATION SHEET

TOWN: BOLTON
ROUTE: CO TH/4
BRIDGE: 7

INSPECTORS: ANDY ROWE & RICHARD KNOWLTON
DATE: 7-10-91

PLANKS ARE (CIRCLE ONE): (TRANSVERSE) LONGITUDINAL

PLANKS ARE (CIRCLE ONE): (FLAT) ON EDGE NAIL LAM. GLULAM.

VOID NEW RECORD

GAP BETWEEN PLANKS IF ANY: — INCHES

AVERAGE PLANK DIMENSION: WIDTH= 7 3/4 INCHES THICKNESS= 3 INCHES

RUNNERS (CIRCLE ONE): NONE (EACH TIRE TRACK) FULL WIDTH

AVERAGE RUNNER DIMENSION: WIDTH= 9 3/4 INCHES THICKNESS= 1 1/2 INCHES

CAN WHEEL LOAD GET OFF THE RUNNERS (CIRCLE ONE)? YES (NO)

PAVEMENT THICKNESS: — INCHES

TYPE OF TIMBER: ASSUMED EASTERN HEMLOCK

TOP FLANGE WIDTH OF SUPPORT: 9 1/8 INCHES

TYPICAL SECTION:

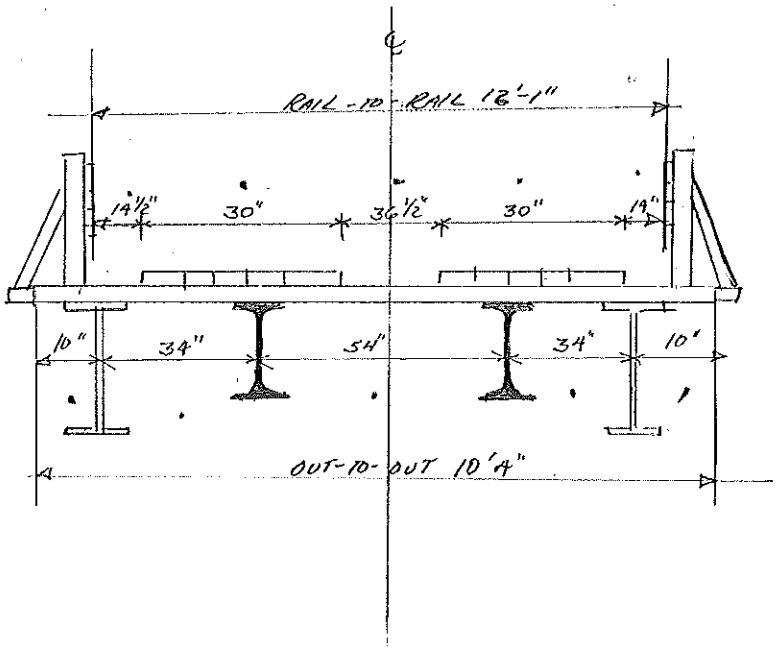

NOTE: DRAW IN BEAMS AND SPACINGS, AND ALSO RUNNER DIMENSIONS.

COMMENTS: * The two interior I-beams are twisted and bowed up to 1"-3". ✓

TSY OBSERVATION CODE ITEM 64 & 66 = 203 ✓
AND ITEM 70 = 4. ✓

RUDK TO WRITE LETTER.

15.50 6.375 MLJ91

SUPERSTRUCTURE INFORMATION SHEET

TOWN: Bolton
ROUTE: C3 11/19
BRIDGE: 7

INSPECTORS: Andy Rowe & Richard Knowlton
DATE: 7-10-91

TYPE OF STRUCTURE: STEEL STRINGER W/ TIMBER DECK YEAR BUILT: Unknown

LANES ON STUCTURE (CIRCLE ONE): (1) 2

SPAN LENGTH: 36 FT NUMBER OF BEAMS: 4

BEAM SPACING: SEE FRONT

COVER PLATE DIMENSIONS IF ANY:

TOP: WIDTH= — INCHES THICKNESS= — INCHES

BOTTOM: WIDTH= — INCHES THICKNESS= — INCHES

DECK TYPE (CIRCLE ONE): CONCRETE (WOOD) STEEL OTHER

DECK THICKNESS: 3 INCHES HAUNCH DEPTH IF APPLICABLE: — INCHE

COMPOSITE (CIRCLE ONE): YES (NO)

PAVEMENT THICKNESS IF ANY: — INCHES

BEAM DIMENSIONS:

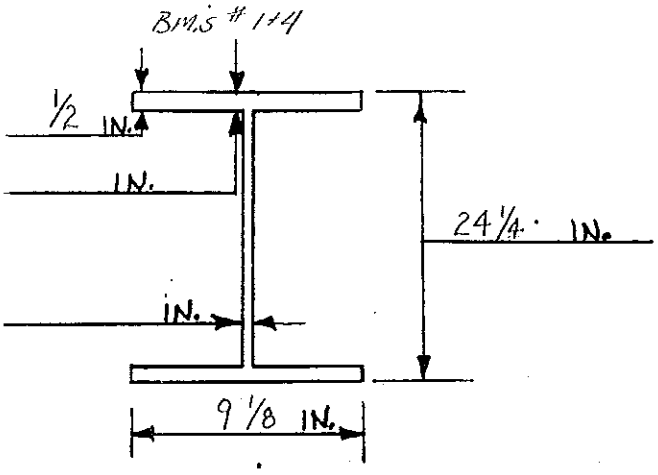

DIAPHRAGMS (CIRCLE ONE):
YES (NO)
DESCRIPTION:

Old Book (AISC) Pg. 51 B24

Assumed Beam Size
W24 x 84
d = 24.10 in.
A = 24.7 in.²
S = 196 in.³

d = 24.00
I = 2091.0 in⁴
A = 21.47 in²
WGT. 43.5 LBS
Fy = 30 KSI

? Fy = 30 KSI

ADDITIONAL COMMENTS AND DETAILS:

* CONDITION OF INTERIOR BEAMS

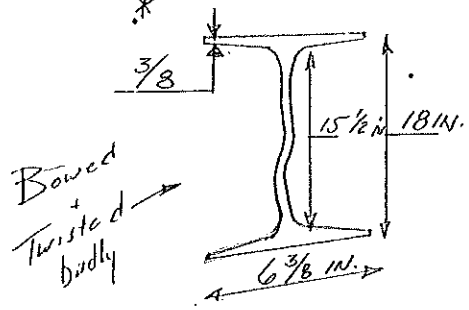

Assumed Beam Size Old AISC pg. 13 see up from bot.
18 x 6 American Standard
WGT 70.0 LBS
d = 18.00 in.
A = 20.46 in²
I = 917.5 in⁴
Fy = 30 KSI