STATE OF VERMONT
AGENCY OF TRANSPORTATION

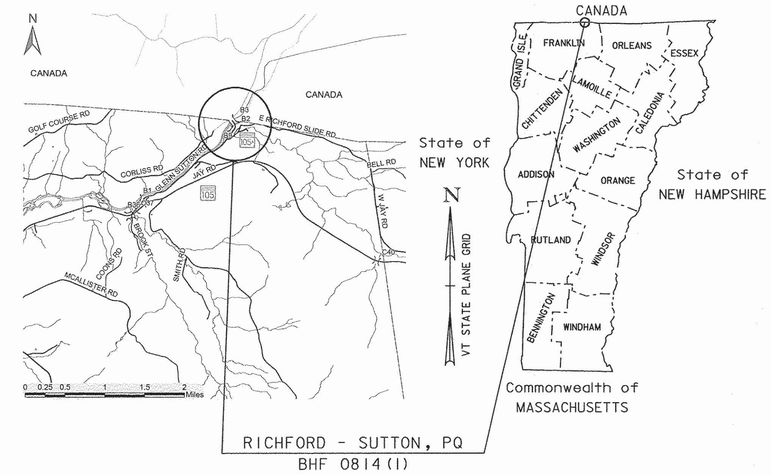

PROPOSED IMPROVEMENT
BRIDGE PROJECT

TOWN OF RICHFORD, VT-SUTTON, PQ

COUNTY OF FRANKLIN

ROUTE NO : VT 105A, MINOR COLLECTOR BRIDGE NO : 3

PROJECT LOCATION : ON VT 105A OVER THE MISSISQUOI RIVER BEGINNING APPROXIMATELY 1.7 MILES EAST FROM THE INTERSECTION WITH VT 105 AND EXTENDING EASTERLY APPROXIMATELY .039 MILES. BRIDGE IS LOCATED DIRECTLY ON THE BORDER BETWEEN THE UNITED STATES AND CANADA.

PROJECT DESCRIPTION : REPLACEMENT OF THE APPROACH SPAN, REPLACEMENT OF ABUTMENT #1, REHABILITATION OF THE STEEL TRUSS SPAN, REPAIR WORK OF THE PIER AND ABUTMENT #2, AS WELL AS ALL NECESSARY APPROACH WORK.

LENGTH OF STRUCTURE :	205.18 FEET.
LENGTH OF ROADWAY :	00.00 FEET.
LENGTH OF PROJECT :	205.18 FEET.

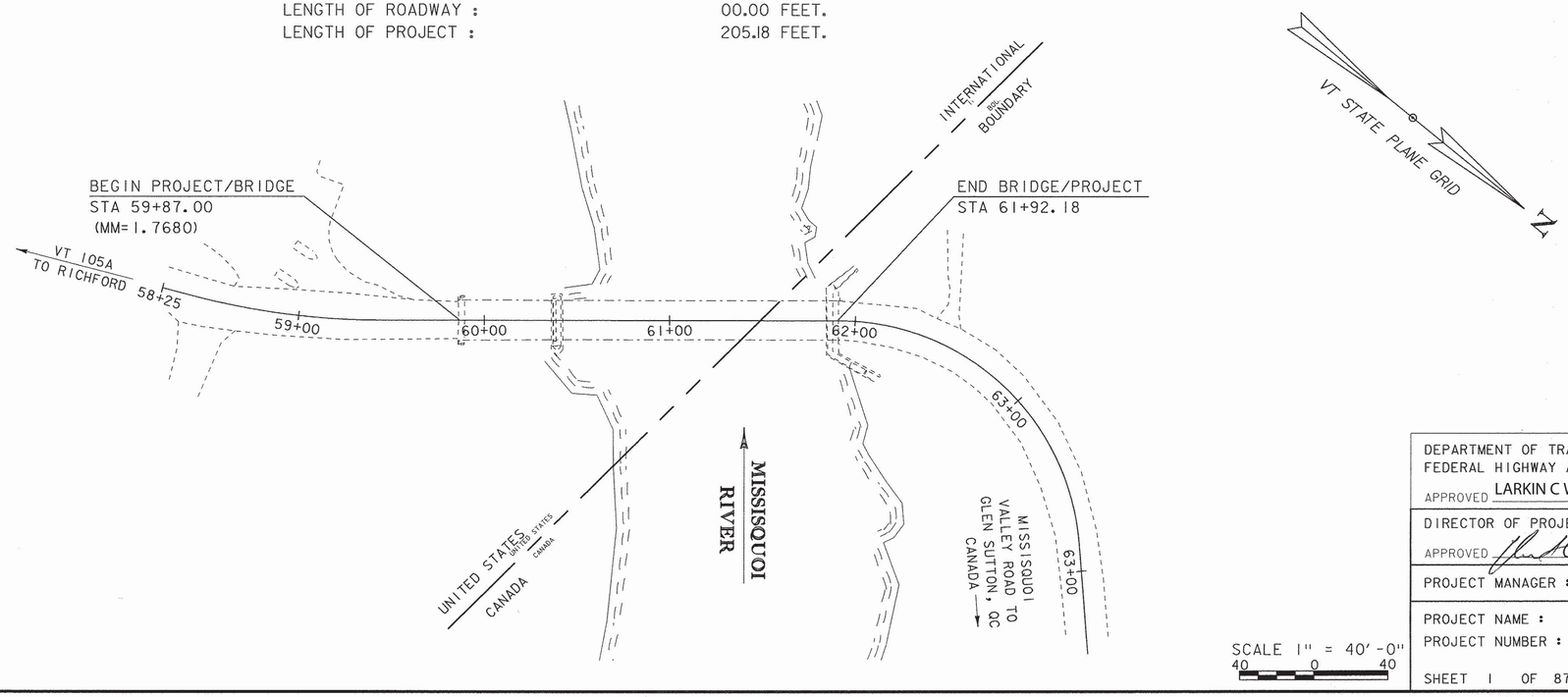

SCALE 1" = 40'-0"
40 0 40

CONSTRUCTION IS TO BE CARRIED ON IN ACCORDANCE WITH THESE PLANS AND THE STANDARD SPECIFICATIONS FOR CONSTRUCTION DATED 2011, AS APPROVED BY THE FEDERAL HIGHWAY ADMINISTRATION ON JULY 20, 2011 FOR USE ON THIS PROJECT, INCLUDING ALL SUBSEQUENT REVISIONS AND SUCH REVISED SPECIFICATIONS AND SPECIAL PROVISIONS AS ARE INCORPORATED IN THESE PLANS.

QUALITY ASSURANCE PROGRAM : LEVEL 2

SURVEYED BY : VTRANS - R.GILMAN
SURVEYED DATE : 02-09-2015

DATUM
VERTICAL NAVD88
HORIZONTAL NAD83 (2007)

DEPARTMENT OF TRANSPORTATION
FEDERAL HIGHWAY ADMINISTRATOR
APPROVED LARKIN C WELLBORN Digitally signed by LARKIN C WELLBORN DN: c=US, o=U.S. Government, ou=FHWA FHWAMontpelierVT, ou=DOT FHWAMontpelierVT, cn=LARKIN C WELLBORN Date: 2017.10.23 07:53:25 -04'00'

DIRECTOR OF PROJECT DELIVERY
APPROVED DATE 9/11/2017

PROJECT MANAGER : C.W. CARLSON, P.E.

PROJECT NAME : RICHFORD - SUTTON, PQ
PROJECT NUMBER : BHF 0814(1)

SHEET 1 OF 87 SHEETS

STATE OF VERMONT
AGENCY OF TRANSPORTATION

PRELIMINARY INFORMATION SHEET (BRIDGE)

Version
LRFD

INDEX OF SHEETS

PLAN SHEETS

1	TITLE SHEET
2	PRELIMINARY INFORMATION SHEET
3 - 4	TYPICAL SECTIONS 1-2
5 - 6	PROJECT NOTES 1-2
7 - 9	QUANTITY SHEETS 1-3
10 - 11	BRIDGE QUANTITY SHEETS 1-2
12	CONVENTIONAL SYMBOLOGY- LEGEND
13	TIE SHEET
14	LAYOUT SHEET
15	VT 105A PROFILE
16	PROJECT DETOUR OVERVIEW
17	SITE TRAFFIC CONTROL PLAN
18	TRAFFIC SIGNS AND PAVEMENT MARKINGS
19 - 21	TRAFFIC SIGN SUMMARY SHEETS 1-3
22	BORING INFORMATION SHEET
23 - 24	BORING LOGS 1-2
25	PLAN AND ELEVATION
26	APPROACH SPAN TYPICAL
27	APPROACH SPAN FRAMING PLAN
28 - 29	TRUSS SPAN TYPICAL 1-2
30	TRUSS REPAIRS
31	FLOOR BEAM DETAILS
32	FLOOR BEAM ASSEMBLY DETAILS
33	FLOOR BEAM AND STRINGER END DETAILS
34 - 35	FLOOR BEAM BRACING DETAILS 1-2
36	STRINGER DETAILS
37 - 38	GUSSET PLATE DETAILS 1-2
39	PIER COVER PLATE DETAILS
40	ABUTMENT #2 COVER PLATE DETAILS
41	SPLICE PLATE DETAILS
42	CURB CUT DOWNSPOUT
43	CURB CUT DOWNSPOUT DETAIL
44	DOWNSPOUT BRACKET DETAIL
45 - 46	BRIDGE EXPANSION JOINT DETAILS 1-2
47	EXPANSION JOINT TROUGH AND HOPPER
48	EXPANSION JOINT HOPPER DETAIL
49	EXPANSION JOINT DOWNSPOUT DETAIL
50	APPROACH SLAB DETAILS
51	EXPANSION BEARING ABUTMENT #1
52	FIXED BEARING APPROACH SPAN PIER
53	FIXED BEARING TRUSS SPAN PIER
54	EXPANSION BEARING ABUTMENT #2
55	ABUTMENT #1 PLAN AND ELEVATION
56	ABUTMENT #1 AND WINGWALL #1/#2 TYPICALS
57	WINGWALL #1 AND #2 ELEVATION
58	PIER CAP DETAILS
59 - 60	PIER CONCRETE REPAIRS 1-2
61	ABUTMENT #2 CAP DETAILS
62 - 63	ABUTMENT #2 CONCRETE REPAIRS 1-2
64 - 66	BRIDGE RAIL PLAN AND ELEVATION 1-3
67	BRIDGE RAIL DETAILS
68	BRIDGE RAIL EXPANSION DETAILS
69	APPROACH RAIL DETAILS
70	REINFORCING STEEL SCHEDULE
71 - 76	VT 105A CROSS SECTIONS 1-6
77	MATERIAL TRANSITION & BANKING DIAGRAM
78 - 82	CHANNEL CROSS SECTIONS 1-5
83	EPSC NARRATIVE
84	EPSC EXISTING CONDITION
85	EPSC CONSTRUCTION / FINAL CONDITION
86 - 87	EPSC DETAILS 1-2

REFERENCE SHEETS

1 - 49	REFERENCE SHEETS (1929 AND 1979 RECORD PLANS)

STRUCTURES AND HSD DETAIL SHEETS

HSD 400.01	SAFETY EDGE DETAILS	3/29/2016
HSD 621.06	GUARDRAIL TERMINAL LABEL DETAIL	2/27/2017
SD-501.00	CONCRETE DETAILS AND NOTES	2/9/2012
SD-502.00	CONCRETE DETAILS AND NOTES	10/10/2012
SD-516.10	BRIDGE JOINT ASPHALTIC PLUG	8/29/2011
SD-601.00	STRUCTURAL STEEL DETAILS AND NOTES	6/4/2010
SD-602.00	STRUCTURAL STEEL PLATE GIRDER DETAILS AND NOTES	5/2/2011

STANDARDS LIST

E-121	STANDARD SIGN PLACEMENT - CONVENTIONAL ROAD	08-08-1995
E-146	REGULATORY SIGN DETAILS	09-20-1995
E-172	VEHICLE DETECTOR LOOP DETAILS	08-09-1995
E-191	PAVEMENT MARKING DETAILS	02-01-1999
E-193	PAVEMENT MARKING DETAILS	08-18-1995
G-1	STEEL BEAM GUARDRAIL DETAILS (POST, DELINEATOR, TYPICALS)	03-10-2017
G-1D	STEEL BEAM GUARDRAIL DETAILS (END TERMINAL, ANCHOR, MEDIAN)	03-10-2017
T-1	TRAFFIC CONTROL GENERAL NOTES	04-25-2016
T-2	TRAFFIC SIGN GENERAL NOTES	04-25-2016
T-10	CONVENTIONAL ROADS CONSTRUCTION APPROACH SIGNING	08-06-2012
T-40	DELINEATORS AND MILEPOSTS	01-02-2013
T-42	BRIDGE NUMBER PLAQUE	04-09-2014
T-45	SQUARE TUBE SIGN POST AND ANCHOR	01-02-2013
T-56	STANDARD SIGN PLACEMENT	10-26-2015
T-71	VERMONT REGULATORY SIGN DETAILS	04-25-2016

AS BUILT "REBAR" DETAIL

LEVEL I	LEVEL II	LEVEL III
TYPE:	TYPE:	TYPE:
GRADE:	GRADE:	GRADE:

TRAFFIC DATA

YEAR	ADT	DHV	% D	% T	ADTT
2018	210	25	60	5.3	10
2038	240	30	60	6.8	10

20 year ESAL for flexible pavement from 2018 to 2038 : 24000
40 year ESAL for flexible pavement from 2018 to 2058 : 57000
Design Speed : 25 mph

FINAL HYDRAULIC REPORT

HYDROLOGIC DATA

Date: November 2016

DRAINAGE AREA : 363 sq. mi.
CHARACTER OF TERRAIN : Rural and hilly
STREAM CHARACTERISTICS : Sinuous and alluvial
NATURE OF STREAMBED : Gravel and sand

PEAK FLOW DATA - ANNUAL EXCEEDANCE PROBABILITY (AEP)

43% =	7,500 cfs	2% =	17,100 cfs
10% =	12,800 cfs	1% =	19,100 cfs
4% =	15,000 cfs	0.2% =	24,400 cfs

DATE OF FLOOD OF RECORD 1927
ESTIMATED DISCHARGE: Unknown
WATER SURFACE ELEV.: Unknown
NATURAL STREAM VELOCITY : Unknown
ICE CONDITIONS : Moderate
DEBRIS: Little
DOES THE STREAM REACH MAXIMUM HIGHWATER ELEV. RAPIDLY? No
IS ORDINARY RISE RAPID? No
IS STAGE AFFECTED BY UPSTREAM OR DOWNSTREAM CONDITIONS? No
IF YES, DESCRIBE:

WATERSHED STORAGE: <1%
HEADWATERS:
UNIFORM: X
IMMEDIATELY ABOVE SITE:

EXISTING STRUCTURE INFORMATION

STRUCTURE TYPE: 2-span bridge - Steel beam approach with steel thru truss bridge
YEAR BUILT: 1929, reconstructed in 1979
CLEAR SPAN(NORMAL TO STREAM): 151'
VERTICAL CLEARANCE ABOVE STREAMBED: 30.5'
WATERWAY OF FULL OPENING:
DISPOSITION OF STRUCTURE: Rehabilitate, no additional fill in floodplain
TYPE OF MATERIAL UNDER SUBSTRUCTURE: See borings

WATER SURFACE ELEVATIONS AT:

43% AEP =		VELOCITY =	
10% AEP =	501.3'	"	
4% AEP =		"	
2% AEP =	502.5'	"	
1% AEP =	503.5'	"	

LONG TERM STREAMBED CHANGES: None noted

IS THE ROADWAY OVERTOPPED BELOW 1% AEP: No
FREQUENCY: N/A
RELIEF ELEVATION: 511.0'
DISCHARGE OVER ROAD @ 1% AEP: N/A

UPSTREAM STRUCTURE

TOWN:	Sutton, QC	DISTANCE:	Unknown
HIGHWAY # :		STRUCTURE #:	
CLEAR SPAN:		CLEAR HEIGHT:	
YEAR BUILT:		FULL WATERWAY:	
STRUCTURE TYPE:	Unknown		

DOWNSTREAM STRUCTURE

TOWN:	Richford	DISTANCE:	30,850'
HIGHWAY # :	TH 2	STRUCTURE #:	41
CLEAR SPAN:	125'	CLEAR HEIGHT:	
YEAR BUILT:	1934, reconstructed in 2008	FULL WATERWAY:	
STRUCTURE TYPE:	Steel pony truss		

LRFR LOAD RATING FACTORS

LOADING LEVELS	TRUCK						
	H-15	H-20	3S2	6 AXLE	3A STR.	4A STR.	5A SEM
TONNAGE	**15**	**20**	**36**	**66**	**30**	**34.5**	**38**
INVENTORY	1.1	0.85					
POSTING							
OPERATING	2.2	1.8	1.16	0.68	1.24	1.09	1.06

COMMENTS: Controlling member is TC2

PROPOSED STRUCTURE

STRUCTURE TYPE: Same as existing

CLEAR SPAN(NORMAL TO STREAM):
VERTICAL CLEARANCE ABOVE STREAMBED:
WATERWAY OF FULL OPENING:

WATER SURFACE ELEVATIONS AT:

43% AEP =		VELOCITY=	
10% AEP =	501.3'	"	
4% AEP =		"	
2% AEP =	502.5'	"	
1% AEP =	503.5'	"	

IS THE ROADWAY OVERTOPPED BELOW 1% AEP: No
FREQUENCY: N/A
RELIEF ELEVATION: 511.0'
DISCHARGE OVER ROAD @ 1% AEP: N/A

BRIDGE LOW CHORD ELEVATION: 514.5'
FREEBOARD: @ 2% AEP = 12'

SCOUR: No scour issues indicated

REQUIRED CHANNEL PROTECTION: Stone Fill, Type III

PERMIT INFORMATION

AVERAGE DAILY FLOW:	-	DEPTH OR ELEVATION:
ORDINARY LOW WATER:	-	-
ORDINARY HIGH WATER:	-	-

TEMPORARY BRIDGE REQUIREMENTS

STRUCTURE TYPE: None required
CLEAR SPAN (NORMAL TO STREAM):
VERTICAL CLEARANCE ABOVE STREAMBED:
WATERWAY AREA OF FULL OPENING:

ADDITIONAL INFORMATION

Since the bridge is being rehabilitated inside the existing footprint horizontally and vertically, there will be no impact on hydraulic variables. Flows and water surface elevations were taken from the 1980 Richford Flood Insurance Study.

TRAFFIC MAINTENANCE NOTES

1. MAINTAIN TRAFFIC ON AN OFF SITE DETOUR.
2. TRAFFIC SIGNALS ARE NOT NECESSARY.
3. SIDEWALKS ARE NOT NECESSARY

DESIGN VALUES

1.	DESIGN LIVE LOAD		H-15
2.	FUTURE PAVEMENT	d_p:	2.5 INCH
3.	ABUTMENT BEARING TO BEARING LENGTH (TWO SPANS) (50.00 - 150.00) FT	L:	200.00 FT
4.	MIN. MID-SPAN POS. CAMBER @ RELEASE (PRESTRESSED UNITS)	Δ:	- - -
5.	PRESTRESSING STRAND	f_y:	- - -
6.	PRESTRESSED CONCRETE STRENGTH	f'_c:	- - -
7.	PRESTRESSED CONCRETE RELEASE STRENGTH	f'_{ci}:	- - -
8.	CONCRETE, HIGH PERFORMANCE CLASS AA	f'_c:	4.0 KSI
9.	CONCRETE, HIGH PERFORMANCE CLASS A	f'_c:	4.0 KSI
10.	CONCRETE, HIGH PERFORMANCE CLASS B	f'_c:	3.5 KSI
11.	CONCRETE, CLASS C	f'_c:	3.0 KSI
12.	REINFORCING STEEL	f_y:	60 KSI
13.	STRUCTURAL STEEL AASHTO M270 (PAINTED)	f_y:	50 KSI
14.	NOMINAL BEARING RESISTANCE OF SOIL	q_n:	4.0 KSF
15.	SOIL BEARING RESISTANCE FACTOR (REFER TO AASHTO LRFD)	ϕ:	- - -
16.	NOMINAL BEARING RESISTANCE OF ROCK	q_n:	10.0 KSF
17.	ROCK BEARING RESISTANCE FACTOR (REFER TO AASHTO LRFD)	ϕ:	- - -
18.	PILE RESISTANCE FACTOR	ϕ:	0.65
19.	LATERAL PILE DEFLECTION	Δ:	0.59 INCH
20.	BASIC WIND SPEED	V_{3s}:	- - -
21.	MINIMUM GROUND SNOW LOAD	p_g:	- - -
22.	SEISMIC DATA PGA: 0.65	S_s:	- - -
		S_1:	- - -
23.			
24.			- - -
25.			- - -
26.			- - -

PROJECT NAME: **RICHFORD-SUTTON, PQ**
PROJECT NUMBER: **BHF 0814(1)**

FILE NAME:	s10c222pi.xls	PLOT DATE:	10/31/2017
PROJECT LEADER:	C. CARLSON	DRAWN BY:	G. ROKES
DESIGNED BY:	C. BURRALL	CHECKED BY:	C. BURRALL
PRELIMINARY INFORMATION SHEET		SHEET	2 OF 87

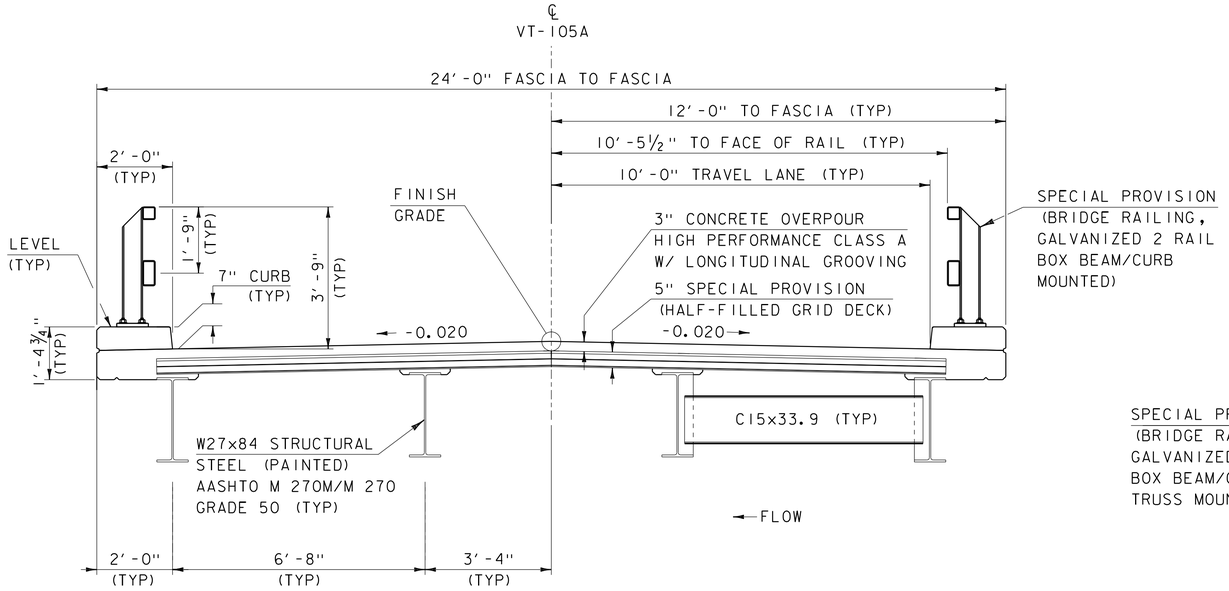

APPROACH SPAN TYPICAL SECTION

SCALE ½" = 1'-0"

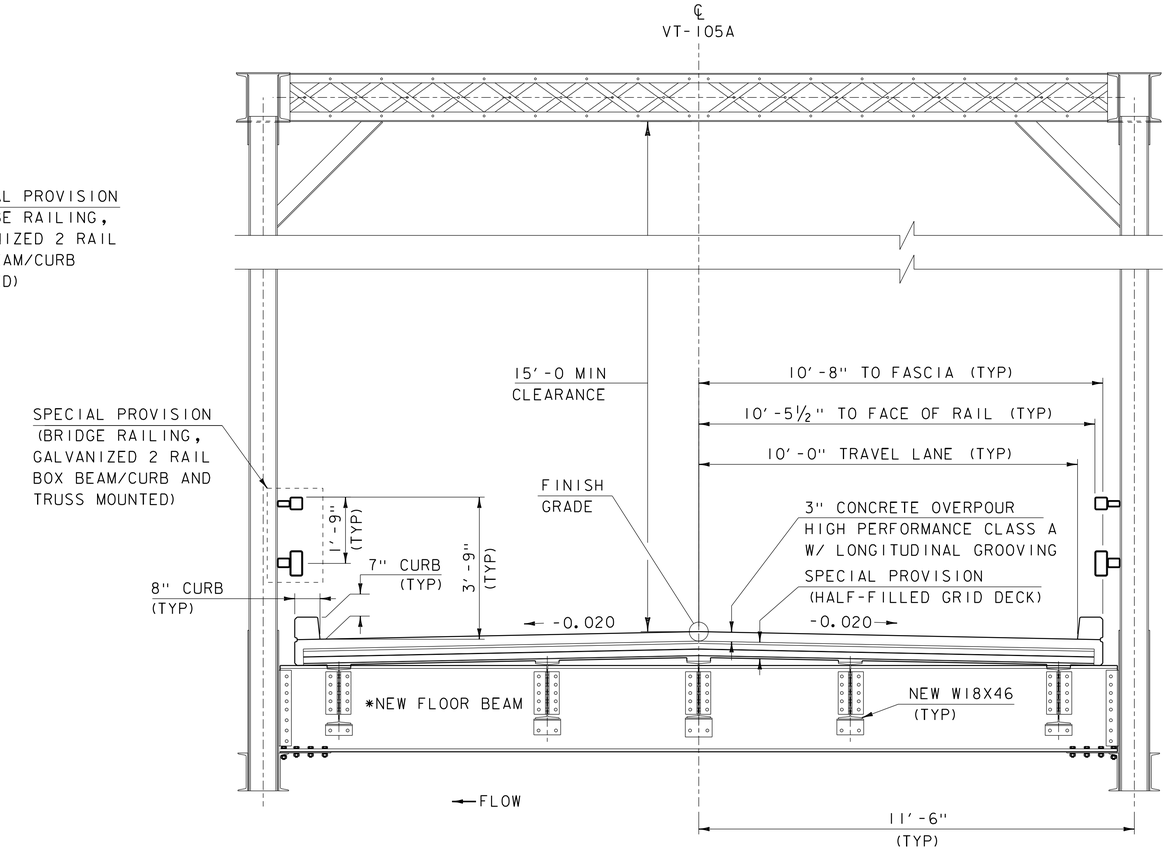

*NEW W27x114 FOR FB1
NEW W27x104 FOR FB2/ FB3

TRUSS SPAN TYPICAL SECTION

SCALE ½" = 1'-0"

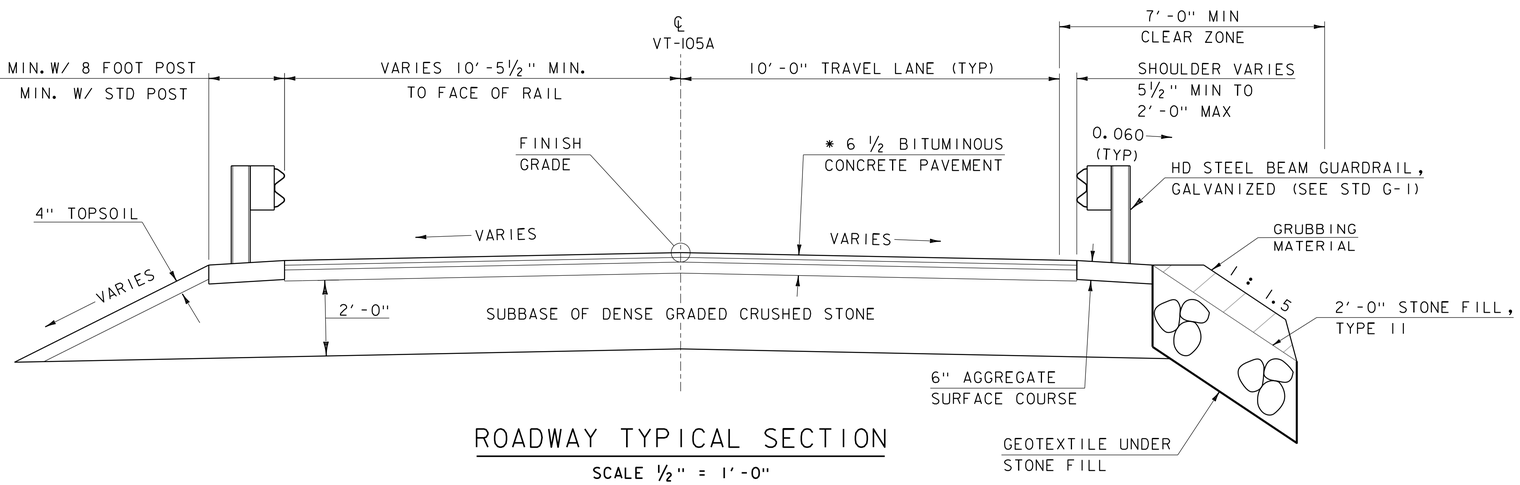

ROADWAY TYPICAL SECTION

SCALE ½" = 1'-0"

SEE "VT 105A CROSS SECTIONS" AND "MATERIAL TRANSITION" SHEETS FOR ACTUAL SLOPES AND DEPTHS.

PAVEMENT SHALL BE PAID FOR UNDER ITEM 900.680 "SPECIAL PROVISION (BITUMINOUS CONCRETE PAVEMENT, SMALL QUANTITY)".

TACK COAT: EMULSIFIED ASPHALT IS TO BE APPLIED AT A RATE OF 0.025 GAL/SY BETWEEN SUCCESSIVE COURSES OF PAVEMENT AND 0.080 GAL/SY ON COLD PLANED SURFACES AS DIRECTED BY THE ENGINEER.

MATERIAL TOLERANCES
(IF USED ON PROJECT)

SURFACE	
- PAVEMENT (TOTAL THICKNESS)	+/- ¼"
- AGGREGATE SURFACE COURSE	+/- ½"
SUBBASE	+/- 1"
SAND BORROW	+/- 1"

* 1 ½" BITUMINOUS CONCRETE PAVEMENT, TYPE IVS OVER
1 ½" BITUMINOUS CONCRETE PAVEMENT, TYPE IVS OVER
3 ½" BITUMINOUS CONCRETE PAVEMENT, TYPE IIS

PROJECT NAME: RICHFORD-SUTTON, PQ
PROJECT NUMBER: BHF 0814(1)

FILE NAME: s10c222typ.dgn
PROJECT LEADER: C. CARLSON
DESIGNED BY: C. BURRALL
TYPICAL SECTION 1
PLOT DATE: 26-SEP-2017
DRAWN BY: G. ROKES
CHECKED BY: C. BURRALL
SHEET 3 OF 87

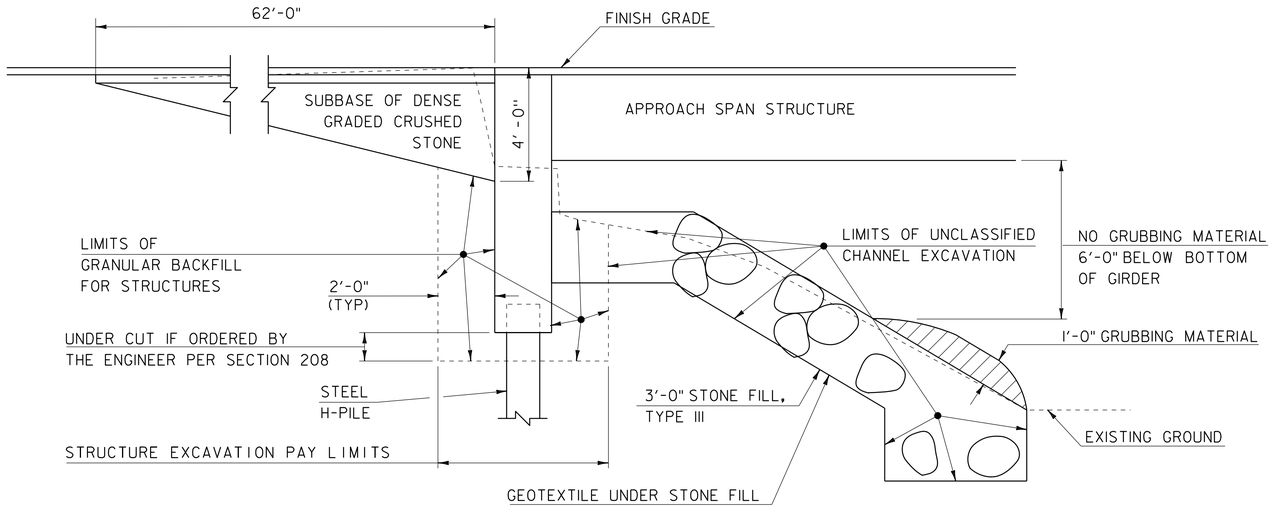

ABUTMENT #1 EARTHWORK TYPICAL SECTION

SCALE 3/8" = 1'-0"

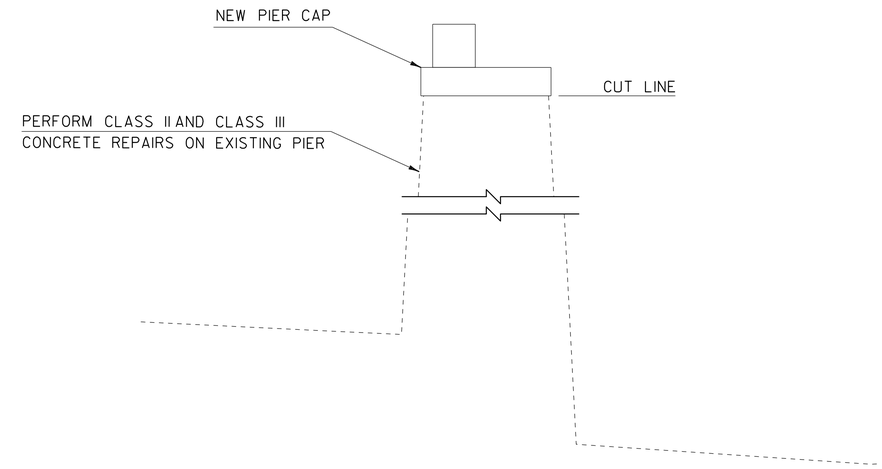

PIER TYPICAL SECTION

SCALE 3/8" = 1'-0"

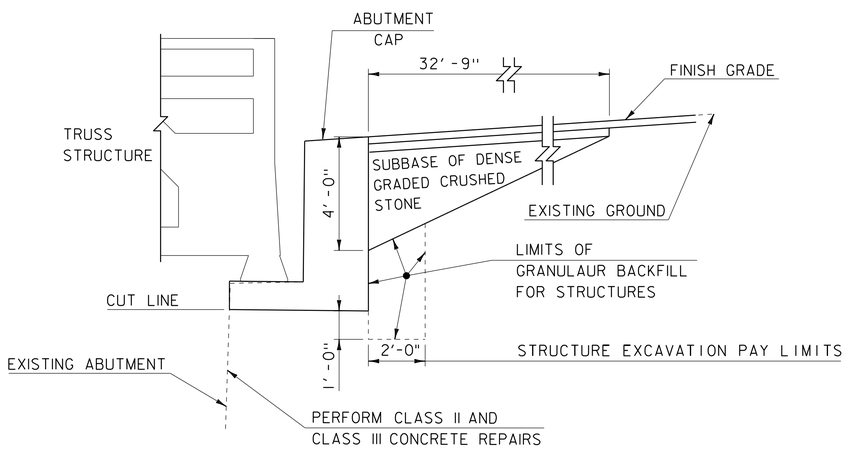

ABUTMENT #2 EARTHWORK TYPICAL SECTION

SCALE 3/8" = 1'-0"

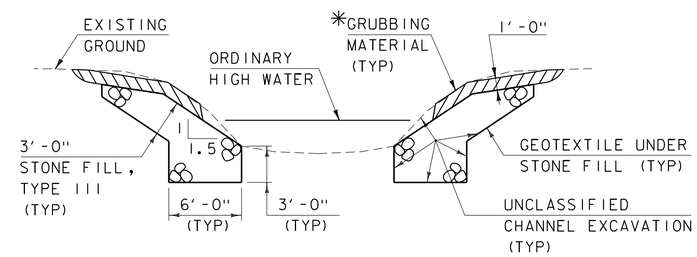

TYPICAL CHANNEL SECTION

(NOT TO SCALE)

*GRUBBING MATERIAL SHALL NOT BE PLACED WITHIN 3 FEET OF THE ABUTMENTS UNDER THE BRIDGE. WHENEVER CHANNEL SLOPE INTERSECTS ROADWAY SUBBASE, GRUBBING MATERIAL SHALL BEGIN AT THE BOTTOM OF SUBBASE.

PROJECT NAME: RICHFORD-SUTTON, PQ	
PROJECT NUMBER: BHF 0814(1)	
FILE NAME: s10c222typ.dgn	PLOT DATE: 26-SEP-2017
PROJECT LEADER: C. CARLSON	DRAWN BY: G. ROKES
DESIGNED BY: C. BURRALL	CHECKED BY: C. BURRALL
TYPICAL SECTION 2	SHEET 4 OF 87

GENERAL

1. ALL MATERIALS AND CONSTRUCTION SHALL CONFORM TO THE STATE OF VERMONT AGENCY OF TRANSPORTATION STANDARD SPECIFICATIONS FOR CONSTRUCTION DATED 2011 AND ITS LATEST REVISIONS, AND THE AASHTO LRFD BRIDGE DESIGN SPECIFICATIONS 7TH EDITION, AND THEIR LATEST REVISIONS.

2. ALL DIMENSIONS SHOWN IN THE PLANS ARE HORIZONTAL OR VERTICAL AND ARE GIVEN AT 68 DEGREES FAHRENHEIT, UNLESS OTHERWISE NOTED.

3. THE DETAILS AND DIMENSIONS SHOWN ON THE PROJECT SPECIFIC PLAN AND DETAIL SHEETS TAKE PRECEDENCE OVER THE MORE GENERAL "STRUCTURES DETAIL SHEETS" PROVIDED AFTER THE PLAN SHEETS.

4. THE DIMENSIONS OF EXISTING MATERIALS GIVEN IN THE PLANS HAVE BEEN ASSUMED. THE ACTUAL DIMENSIONS AND CONDITION OF EXISTING MATERIALS MAY DIFFER FROM THOSE GIVEN IN THE PLANS. IT IS THE CONTRACTOR'S RESPONSIBILITY TO VERIFY ALL EXISTING DIMENSIONS AND CONDITIONS.

5. ANY KNOWN AVAILABLE HISTORIC TRUSS PLAN SHEETS ARE INCLUDED IN THIS PLAN SET. THE INFORMATION CONTAINED IN THESE REFERENCE SHEETS HAS NOT BEEN VERIFIED AND ARE INCLUDED FOR INFORMATIONAL PURPOSES ONLY. IT IS THE CONTRACTOR'S RESPONSIBILITY TO VERIFY THE ACCURACY OF ANY INFORMATION CONTAINED IN THE PLANS. THE STATE SHALL NOT BE LIABLE FOR ANY OMISSIONS OR INCORRECT INFORMATION SHOWN IN THE REFERENCE PLANS.

6. BRIDGE #3 WAS DESIGNED FOR AN H-15 LIVE LOAD.

ROADWAY

7. THE CONTRACTOR SHALL REMOVE AND REPLACE THE EXISTING VEHICLE LOOP DETECTOR IN THE PAVEMENT LOCATED APPROXIMATELY AT STATION 59+70.00. THIS WORK SHALL BE CONSIDERED INCIDENTAL TO ITEM 900.680, "SPECIAL PROVISION (BITUMINOUS CONCRETE PAVEMENT, SMALL QUANTITY)". THE CONTRACTOR SHALL CONTACT BRIAN FULLER, SUPERVISORY MANAGER – VERMONT & NEW HAMPSHIRE U.S. GENERAL SERVICES ADMINISTRATION AT (802) 951-6365 OR (802) 274-1466 TO SET UP A MEETING TO COORDINATE THE EXACT LOCATION AND LENGTH OF THE DETECTOR PRIOR TO ORDERING.

TRAFFIC CONTROL

8. THE CONTRACTOR SHALL BE RESPONSIBLE FOR THE DESIGN AND IMPLEMENTATION OF A SITE SPECIFIC TRAFFIC CONTROL PLAN FOR ALL STAGES OF CONSTRUCTION. THE PLAN SHALL CLEARLY DETAIL HOW TRAFFIC WILL BE MAINTAINED. THE PLAN SHALL SPECIFY ALL CONSTRUCTION ACTIVITIES REQUIRING ALTERNATING ONE WAY TRAFFIC, RELATE THOSE ACTIVITIES TO THE CONSTRUCTION SCHEDULE, AND SHOW APPROPRIATE TEMPORARY TRAFFIC CONTROL. ALL COSTS WILL BE INCLUDED IN ITEMS 900.645, "SPECIAL PROVISION (TRAFFIC CONTROL, ALL-INCLUSIVE)". FIELD WORK SHALL NOT COMMENCE UNTIL A TRAFFIC CONTROL PLAN HAS BEEN SUBMITTED BY THE CONTRACTOR AND ACCEPTED BY VTRANS.

9. VT 105A IN PROXIMITY OF THE PROJECT WILL BE CLOSED DURING THE BRIDGE CLOSURE PERIOD (BCP). THE TEMPORARY DETOUR, TO BE USED WHILE THE BRIDGE IS CLOSED, IS SHOWN ON THE TRAFFIC DETOUR SHEET. THE INSTALLATION AND MAINTENANCE OF ALL SIGNING ASSOCIATED WITH THE TEMPORARY DETOUR SHALL BE INCLUDED IN THE UNIT PRICE BID FOR ITEM 900.645, "SPECIAL PROVISION (TRAFFIC CONTROL ALL-INCLUSIVE)".

10. THE CONTRACTOR SHALL BE RESPONSIBLE FOR ALL DETOUR AND CONSTRUCTION SIGNING ON THE UNITED STATES SIDE OF THE PROJECT. THE EXACT LOCATION WILL BE COORDINATED BY THE RESIDENT ENGINEER AND THE CONTRACTOR AND SHALL BE IN ACCORDANCE WITH THE MANUAL ON UNIFORM TRAFFIC CONTROL DEVICES, DATED 2009, AND ITS LATEST REVISIONS AND THE LATEST EDITION OF THE STANDARD HIGHWAY SIGNS (SHS) BOOK. FOR ADDITIONAL SIGNING REQUIREMENTS, SEE THE T-SERIES OF THE STANDARDS.

11. AT LEAST ONE PORTABLE CHANGEABLE MESSAGE SIGN (PCMS) SHALL BE POSITIONED IN ADVANCE OF EACH APPROACH TO THE WORK ZONE ADVISING OF THE ACTIVITY AHEAD. PAYMENT FOR PCMS WILL BE MADE SEPARATELY UNDER CONTRACT ITEM 641.15, "PORTABLE CHANGEABLE MESSAGE SIGN". PORTABLE CHANGEABLE MESSAGE SIGNS (PCMS) SHALL BE PLACED OFF THE EDGE OFTHE ROADWAY, OUTSIDE THE CLEAR ZONE, BUT SHALL BE VISIBLE FROM THE ROADWAY. ANY VEGETATION THAT INTERFERES WITH VISIBILITY OF THE PCMS SHALL BE REMOVED.

12. ANY REMOVAL, COVERING AND/OR RESETTING OF EXISTING TRAFFIC SIGNS, AS DEEMED NECESSARY BY THE RESIDENT ENGINEER, WILL BE INCIDENTAL TO THE ITEM 900.645, "SPECIAL PROVISION (TRAFFIC CONTROL, ALL-INCLUSIVE)".

13. ALL ON AND OFF PROJECT SIGNS AND BARRICADES AS REQUIRED FOR THE DETOUR IN THE UNITED STATES AND/OR ORDERED BY THE RESIDENT ENGINEER WILL BE THE RESPONSIBILITY OF THE CONTRACTOR AND WILL BE PAID FOR UNDER THE ITEM 900.645, "SPECIAL PROVISION (TRAFFIC CONTROL, ALL-INCLUSIVE)". ALL SIGNS AND BARRICADES SHALL BE INSPECTED DAILY BY THE CONTRACTOR AND REPAIRED AS NECESSARY. ALL SIGNS AND BARRICADES SHALL BE CLEARED OF DUST AND DEBRIS WEEKLY BY THE CONTRACTOR.

EARTHWORK

14. ITEM 529.20, "PARTIAL REMOVAL OF STRUCTURE" SHALL INCLUDE THE REMOVAL AND DISPOSAL OF ANY COMPONENTS ASSOCIATED WITH THE EXISTING BRIDGE NECESSARY TO PERFORM THE REQUIRED WORK. THIS WILL INCLUDE, BUT IS NOT LIMITED TO, THE REMOVAL OF THE APPROACH SPAN SUPERSTRUCTURE, PIER CAP, SELECT TRUSS SUPERSTRUCTURE COMPONENTS, AND ABUTMENT #2 CAP. ANY REMOVAL OF THE EXISTING ABUTMENT #1 OUTSIDE THE LIMITS OF ITEM 204.25, "STRUCTURE EXCAVATION" WILL ALSO BE PAID FOR UNDER THIS ITEM.

15. ITEM 613.12, "STONE FILL, TYPE III" UNDER THE BRIDGE AS SHOWN IN THE PLANS SHALL BE PLACED BEFORE THE NEW GIRDERS ARE SET.

16. THE CONTRACTOR SHALL MAKE REASONABLE ATTEMPTS TO USE NATIVE LEDGE STONE FOR THE STONE FILL. NEW STONE FILL SHALL HAVE A SIMILAR APPEARANCE TO THE EXISTING STONE LOCATED IN THE RIVER AND THE RIVER BANKS.

17. THE CONTRACTOR MUST AVOID ANY UNNECESSARY TREE REMOVAL FROM THE AREA AROUND THE BRIDGE REHABILITATION PROJECT.

CONCRETE

18. ITEM 501.33, "CONCRETE, HIGH PERFORMANCE CLASS A" SHALL BE USED FOR ABUTMENT #1 AND WINGWALLS #1 AND 2 ABOVE THE HORIZONTAL CONSTRUCTION JOINT, PIER CAP REPAIR, AND ABUTMENT #2 CAP REPAIR.

19. ITEM 501.34, "CONCRETE, HIGH PERFORMANCE CLASS B" SHALL BE USED FOR THE APPROACH SLAB, ABUTMENT #1, AND WINGWALLS #1 AND #2 BELOW THE HORIZONTAL CONSTRUCTION JOINT.

20. CONCRETE IN THE BRIDGE DECK SHALL BE SPECIFIED BY THE HALF-FILLED GRID DECK MANUFACTURER AND MEET THE REQUIREMENTS OF ITEM "501.33, CONCRETE, HIGH PERFORMANCE CLASS A". THE COST FOR THIS CONCRETE SHALL BE INCIDENTAL TO ITEM 900.670, "SPECIAL PROVISION (HALF-FILLED GRID DECK)".

21. THE DECK IS TO BE PLACED IN ONE CONTINUOUS POUR WITH A MAXIMUM DURATION OF EIGHT HOURS. IF THE DECK PLACEMENT CANNOT BE COMPLETED, DUE TO UNEXPECTED CIRCUMSTANCES, A CONSTRUCTION JOINT SHALL BE USED. A MINIMUM 96 HOUR DELAY BETWEEN THE COMPLETION OF ONE DAY'S PLACEMENT AND THE BEGINNING OF ANY OTHER ADJACENT SEGMENT SHALL BE OBSERVED.

22. THE GRID DECK PANELS SHALL BE ADJUSTABLE TO ACCOMMODATE THE FINISH GRADE ELEVATIONS DUE TO THE VERTICAL PROFILE AND CROSS-SLOPE WITHOUT EXCEEDING THE WEIGHT LIMITATIONS AND WITHOUT VIOLATING THE MANUFACTURER'S APPROVED INSTALLATION PROCEDURES.

23. SHEAR CONNECTORS SHALL BE PROVIDED ON ALL OF THE APPROACH SPAN BEAMS BUT NOT ON THE TRUSS SPAN STRINGERS AND FLOORBEAMS. THE HALF-FILLED GRID DECK MANUFACTURER SHALL BE RESPONSIBLE FOR DETERMINING THE TYPE, SIZE AND SPACING. THE COST FOR THE SHEAR CONNECTORS SHALL BE INCLUDED IN THE BID PRICE FOR ITEM 900.670, "SPECIAL PROVISION (HALF-FILLED GRID DECK) (FPQ)".

24. SURFACES OF BRIDGE SEATS UNDER BEARING DEVICES SHALL BE LEVEL. THE ENTIRE BRIDGE SEAT SURFACES OF THE PIER AND ABUTMENT #2 SHALL BE SMOOTH. FOR INTEGRAL ABUTMENT #1 THE CONCRETE WITHIN THE REINFORCING CAGE SHALL BE ROUGHENED BY RAKING PARALLEL TO THE FACE OF THE ABUTMENT TO AN AMPLITUDE OF ½ INCH. THE CONCRETE OUTSIDE THE REINFORCING CAGE SHALL REMAIN SMOOTH.

25. ALL NEW AND EXISTING EXPOSED CONCRETE SUBSTRUCTURE SURFACES SHALL BE SEALED AND STAINED. PAYMENT WILL BE MADE UNDER ITEM 900.625, "SPECIAL PROVISION (CONCRETE STAINING AND SEALING)". ADDITIONAL AREAS SHALL BE STAINED AT THE DIRECTION OF THE ENGINEER.

26. ITEM 514.10, "WATER REPELLENT, SILANE" SHALL BE APPLIED TO ALL EXPOSED CONCRETE ON THE BRIDGE SUPERSTRUCTURE, WITH THE EXCEPTION OF THE BOTTOM OF THE BRIDGE DECK BETWEEN THE DRIP NOTCHES, AS WELL AS THE PIER AND ABUTMENTS.

27. ITEM 507.16, "DRILLING AND GROUTING DOWELS" HAS BEEN INCLUDED IN THE CONTRACT FOR USE ON THE PIER CAP REPAIR AND ABUTMENT #2 CAP REPAIR. AN ADDITIONAL QUANTITY HAS BEEN INCLUDED FOR CONCRETE REPAIRS ON THE EXISTING SUBSTRUCTURE IN THE EVENT ADEQUATE STEEL REINFORCING IS NOT FOUND. IF THIS IS FOUND TO BE THE CASE PLEASE CONTACT THE VTRANS PROJECT MANAGER FOR FURTHER GUIDANCE.

28. JOINTS AND SCORE MARKS IN CONCRETE SHALL BE CONSTRUCTED AS INDICATED ON THE PLANS OR AS DIRECTED BY THE ENGINEER.

29. ALL EXPOSED EDGES OF CONCRETE SHALL BE CHAMFERED 1" BY 1".

REINFORCING STEEL

30. REINFORCING BARS AND THEIR DESIGNATIONS SHALL BE AS FOLLOWS:

    - BARS MARKED WITH AN "E" IN THEIR PREFIX SHALL BE ITEM 507.11, "REINFORCING STEEL, LEVEL I (EPOXY COATED)".
    - ALL OTHER REINFORCEMENT SHALL MEET THE REQUIREMENTS OF ITEM 507.11, "REINFORCING STEEL, LEVEL I (BLACK)".
    - BARS MARKED WITH A "BA" IN THEIR PREFIX SHALL CORRESPOND TO REINFORCING STEEL IN THE BRIDGE APPROACH SPAN DECK
    - BARS MARKED WITH A "BT" IN THEIR PREFIX SHALL CORRESPOND TO REINFORCING STEEL IN THE BRIDGE TRUSS SPAN DECK.

31. REINFORCING STEEL INCLUDED IN THE DECK, APPROACH SLABS, ABUTMENT #1 AND WINGWALLS #1 AND #2 ABOVE THE BRIDGE SEAT, PIER CAP, AND ABUTMENT #2 CAP SHALL MEET ALL OF THE REQUIREMENTS FOR ITEM 507.11, "REINFORCING STEEL, LEVEL I (EPOXY COATED)".

32. REINFORCING STEEL INCLUDED IN ABUTMENT #1 AND WINGWALLS #1 AND #2 WHICH IS COMPLETELY BELOW THE BRIDGE SEAT ELEVATIONS SHALL MEET ALL OF THE REQUIREMENTS FOR ITEM 507.11, "REINFORCING STEEL, LEVEL I".

33. NO REINFORCING STEEL SCHEDULES ARE SHOWN ON THE PLANS IN REGARDS TO REINFORCING IN THE DECK, WITH THE EXCEPTION OF THE OVERHANG REINFORCING STEEL. IT IS THE CONTRACTOR'S RESPONSIBILITY TO VERIFY THE GRID DECK MANUFACTURER'S BAR LISTS AND SCHEDULES FOR QUANTITY, SIZE, AND SHAPE OF BAR REINFORCEMENT FOR CONSTRUCTING THE DECK SHOWN IN THE CONTRACT DOCUMENTS. ALL REINFORCING STEEL IN THE DECK AND OVERHANGS TO BE INCIDENTAL TO ITEM 900.670, "SPECIAL PROVISION (HALF-FILLED GRID DECK)".

34. TEST BARS SHALL BE PROVIDED IN ACCORDANCE WITH THE "VERMONT AGENCY OF TRANSPORTATION MATERIAL SAMPLING MANUAL" AVAILABLE ON THE AGENCY WEBSITE.

35. MINIMUM CLEAR COVER FOR REINFORCING STEEL SHALL BE AS FOLLOWS:

    - ALONG BACK FACES OF WALLS AGAINST EARTH: 2 INCH
    - ALONG TOP SURFACE OF DECK SLAB: 3 INCH
    - ALONG BOTTOM SURFACE OF DECK: 1 1/2 INCH
    - ELSEWHERE UNLESS OTHERWISE INDICATED: 3 INCH

STRUCTURAL STEEL

36. THE TRUSS MUST BE SHORED AND REHABILITATED IN PLACE AND PAID FOR UNDER ITEM 502.10, "SHORING SUPERSTRUCTURE" AND 502.11, "SHORING SUPERSTRUCTURE BEARINGS".

37. BEFORE THE TRUSS IS SHORED, THE OVERALL DIMENSIONS OF THE TRUSS ELEMENTS AND CORRESPONDING TEMPERATURE READINGS SHALL BE RECORDED AND GIVEN TO THE VTRANS PROJECT MANAGER. THIS WORK SHALL BE CONSIDERED INCIDENTAL TO ITEM 506.57, "STRUCTURAL STEEL, TRUSS".

38. ALL NEW STRUCTURAL STEEL PAID FOR UNDER ITEM 506.50, "STRUCTURAL STEEL (ROLLED BEAM)", ITEM 506.57, "STRUCTURAL STEEL, TRUSS", AND ITEM 506.60, "STRUCTURAL STEEL" SHALL CONFORM TO AASHTO M 270 GRADE 50.

39. ITEM 506.50, "STRUCTURAL STEEL, ROLLED BEAM" SHALL INCLUDE THE FOLLOWING

    - REPLACEMENT OF APPROACH SPAN BEAMS WITH W27 X 84 ROLLED BEAMS
    - REPLACEMENT OF APPROACH SPAN DIAPHRAGMS WITH C15 X 33.9
    - ALL CONNECTION PLATES AND BEARING STIFFENERS ASSOCIATED WITH APPROACH SPAN STRUCTURAL STEEL
    - REPLACEMENT OF FLOOR BEAM 1 WITH W27 X 114 ROLLED BEAMS
    - REPLACEMENT OF FLOOR BEAMS 2 AND 3 WITH W24 X 104 ROLLED BEAMS
    - REPLACEMENT OF ALL STRINGERS WITH W18 X 46 ROLLED BEAMS

40. ITEM 506.57, "STRUCTURAL STEEL, TRUSS" SHALL INCLUDE THE FOLLOWING

    - REPLACEMENT OF ALL LOWER CHORD GUSSET PLATES
    - PARTIAL REPLACEMENT OF ALL VERTICAL TRUSS MEMBERS FROM 4 FT ABOVE THE TOP OF THE EXISTING CURB AND BELOW WITH STEEL SECTION MATCHING EXISTING SHAPE AS CLOSELY AS POSSIBLE
    - PARTIAL REPLACEMENT OF INDICATED DIAGONAL D1 TRUSS MEMBERS FROM 4 FT ABOVE THE TOP OF THE EXISTING CURB AND BELOW WITH STEEL SECTION MATCHING EXISTING SHAPE AS CLOSELY AS POSSIBLE
    - REPLACEMENT OF ALL LOWER DIAGONAL TRUSS MEMBERS IN THE FLOOR SYSTEM
    - PLATES USED FOR THE VERTICAL AND DIAGONAL TRUSS SPLICES
    - ALL ANGLES, CONNECTION PLATES, BOLTS, NUTS, ETC. TO COMPLETE NECESSARY TRUSS REPAIR WORK
    - ANY ADDITIONAL REPAIRS TO TRUSS MEMBERS THAT ARE NOT SPECIFICALLY CALLED OUT IN THE PLANS, BUT IDENTIFIED BY THE RESIDENT ENGINEER TO BE REPAIRED OR REPLACED DURING CONSTRUCTION

41. ITEM 506.50, "STRUCTURAL STEEL" SHALL INCLUDE THE FOLLOWING

    - SCUPPERS AND DOWNSPOUTS IN THE SUPERSTRUCTURE

42. THE REPAIRS TO THE TRUSS INDICATED IN THE PLANS ARE A MINIMUM REQUIREMENT. ADDITIONAL REPAIRS MAY BE REQUIRED AS DEEMED NECESSARY BY THE RESIDENT ENGINEER.

43. ANY REFERENCE TO "CB" BEAMS IN THE PLANS REFERS TO THE EXISTING CARNEGIE STEEL BEAMS USED IN THE TRUSS. IF NO REPLACEMENT SHAPE IS CLEARLY INDICATED IN THE PLANS IT IS THE CONTRACTOR'S RESPONSIBILITY TO VERIFY THE DIMENSIONS OF THE EXISTING STEEL SHAPE AND REPLICATE THE NEW REPLACEMENT SHAPE AS CLOSELY AS POSSIBLE.

44. IT IS ANTICIPATED THAT PORTIONS OF THE BOTTOM CHORD MAY HAVE SECTION LOSS THAT EXCEEDS 15% OF THE CROSS SECTIONAL AREA OF A MEMBER. AN ESTIMATED QUANTITY OF 3000 POUNDS OF ITEM 506.57, "STRUCTURAL STEEL, TRUSS" HAS BEEN INCLUDED IN THE PLANS FOR REPAIRING THESE AREAS. IT IS NOT ANTICIPATED THAT THE TOP CHORD HAS SECTION LOSS THAT EXCEEDS 15% OF THE CROSS SECTIONAL AREA OF A MEMBER. IF UPON FIELD INSPECTION, SECTION LOSS EXCEEDS 15%, PLEASE CONTACT THE VTRANS PROJECT MANAGER FOR FURTHER GUIDANCE. ⚠

45. THE WEIGHT OF THE EXISTING STEEL TRUSS, INCLUDING ALL THE TRUSS MEMBERS, CHORDS, GUSSET PLATES, LATERALS, CONNECTIONS, FLOOR BEAMS, AND STRINGERS IS ESTIMATED TO BE APPROXIMATELY 200,000 POUNDS. THIS DOES NOT INCLUDE THE WEIGHT OF THE HALF-FILLED GRID DECK SYSTEM.

46. BEARING STIFFENERS SHALL BE PLUMB AFTER ERECTION AND DEAD LOADING OF STRUCTURE.

47. ALL NEW, EASILY VISIBLE TRUSS CONNECTIONS SHALL BE MADE USING TENSION CONTROL BOLT ASSEMBLIES WITH 7/8" DIA ROUND HEAD BOLTS MEETING THE REQUIREMENTS OF ASTM F1852 TYPE 1 AND SUBSECTION 714.13. BOLT CONNECTIONS IN THE TRUSS FLOOR SYSTEM AND NOT EASILY VISIBLE IN THE TRUSS, AS WELL AS APPROACH SPAN CONNECTIONS SHALL BE 7/8" DIA ASTM A325 TYPE I AND MEET THE REQUIREMENTS OF SUBSECTION 714.05. ALL HOLE DIAMETERS SHALL BE 15/16".

48. WHEN CONNECTIONS ARE TO BE MADE WITH EXISTING MATERIAL, THE DIMENSION AND SPACING OF HOLES SHOULD BE VERIFIED BEFORE FABRICATING AND CONNECTING NEW MEMBERS, ANY DISCREPANCIES BETWEEN THE EXISTING CONDITIONS AND THE PLANS SHOULD BE BROUGHT TO VTRANS PROJECT MANAGER FOR CONCURRENCE BEFORE MATERIAL IS FABRICATED AND CONNECTIONS ARE MADE. ⚠

49. ANY CONNECTIONS THAT ARE NOT DETAILED ON THE PLANS SHALL BE DETAILED BY THE FABRICATOR AND SUBMITTED TO THE VTRANS PROJECT MANAGER FOR APPROVAL.

50. FLEMING BRACKETS OR SIMILAR FALSEWORK SHALL BE SPACED AS REQUIRED BY DESIGN, BUT SHALL BE LIMITED TO A MAXIMUM SPACING OF 4 FEET. THE DESIGN OF FALSEWORK SHALL BE THE RESPONSIBILITY OF THE CONTRACTOR. DEPTH OF FLEMING BRACKETS SHALL EXTEND AS NEAR AS POSSIBLE TO THE BOTTOM FLANGE AND SHALL BE A MINIMUM OF 75% OF THE WEB DEPTH.

REVISION	DATE	BY	DESCRIPTION
⚠	11/27/2017	VAOT	REVISED NOTE 44 & ADDED NOTE 45

PROJECT NAME: RICHFORD-SUTTON, PQ
PROJECT NUMBER: BHF 0814(I)

FILE NAME: s10c222forms.dgn
PROJECT LEADER: C. CARLSON
DESIGNED BY: C. BURRALL
PROJECT NOTES I

PLOT DATE: 21-NOV-2017
DRAWN BY: C. BURRALL
CHECKED BY: G. ROKES
SHEET 5 OF 87

51. HOLES IN TRUSS STRINGERS FOR ATTACHMENT OF DOWNSPOUTS SHALL BE SHOP DRILLED. THIS WORK WILL BE INCIDENTALTO ITEM 506.57, “STRUCTURAL STEEL, TRUSS”.

⚠ 52. STRUCTURAL STEEL MEMBERS DESIGNATED “CVN” IN THE PLANS SHALL BE CHARPY V-NOTCH TESTED IN ACCORDANCE WITH SUBSECTION 714.01 OF THE STANDARD SPECIFICATIONS.

53. AFTER SUPERSTRUCTURE STEEL HAS BEEN ERECTED, ELEVATIONS ALONG THE TOP OF THE APPROACH SPAN BEAMS AND TRUSS SPAN FLOOR BEAMS AND STRINGERS SHALL BE TAKEN AS DIRECTED BY THE ENGINEER FOR USE IN DETERMINING FINISHED GRADES.

PROTECTIVE COATINGS

54. SOME OF THE EXISTING STRUCTURAL STEEL IS PAINTED WITH A MATERIAL THAT MAY CONTAIN LEAD. THE CONTRACTOR SHALL FOLLOW ALL APPLICABLE REGULATIONS WHEN HANDLING AND WORKING WITH THIS STEEL. THE REMOVED STRUCTURAL STEEL IS THE PROPERTY OF THE CONTRACTOR. THE CONTRACTOR SHALL INDEMNIFY AND HOLD THE STATE, ITS OFFICERS, AND EMPLOYEES HARMLESS CONCERNING THE CONTRACTOR'S USE OR DISPOSAL OF THE REMOVED EXISTING STRUCTURAL STEEL. THE COSTS ASSOCIATED WITH SAFELY REMOVING THIS PAINT ARE INCLUDED IN THE BID PRICE FOR ITEM 900.645, “SPECIAL PROVISION (CONTAINMENT AND DISPOSAL OF LEAD PAINT CLEANING RESIDUES)”.

55. ALL OF THE EXISTING STEEL TO REMAIN IN THE FINAL STRUCTURE SHALL BE PREPARED TO A “100% BARE EXISTING” CONDITION PER ITEM 900.645, “SPECIAL PROVISION (QC/QA CLEANING AND PAINTING STRUCTURAL COMPONENTS)”.

56. ITEM 900.646, “SPECIAL PROVISION (QC/QA CLEANING AND PAINTING STRUCTURAL COMPONENTS)” SHALL INCLUDE THE PAINTING OF ALL NEW AND EXISTING STRUCTURAL STEEL COMPONENTS OF THE APPROACH SPAN AND TRUSS SPAN, INCLUDING BUT NOT LIMITED TO ALL PLATES, ANGLES, AND CONNECTION HARDWARE. THE PAINTING OF GLAVANIZED BRIDGE RAILING WILL ALSO BE INCLUDED IN THIS WORK.

⚠ 57. THE AREA OF CONTACT BETWEEN ALL EXISTING CONNECTIONS, EXCEPT CONNECTIONS WHICH ARE NOT DISASSEMBLED, SHALL BE FREE OF EXISTING PAINT, CLEANED AND PRIMED TO MEET THE CONDITIONS OF A CLASS B SLIP COEFFICIENT PER THE “TESTING METHOD TO DETERMINE THE SLIP COEFFICIENT FOR COATINGS USED IN BOLTED JOINTS” AS ADOPTED BY THE RESEARCH COUNCIL ON STRUCTURAL CONNECTIONS.

58. THE FINAL COLOR OF ALL STRUCTURAL STEEL IN THE APPROACH SPAN AND TRUSS SPAN INCLUDING ALL CONNECTION PLATES AND ANGLES SHALL BE SAE AMS-STD-595 COLOR CHIP 14062. THE DOWNSPOUTS NEED NOT BE PAINTED.

59. THE TOP COAT OF THE PAINT SYSTEM SHALL BE APPLIED TO ALL OF THE NEW AND EXISTING STRUCTURAL STEEL IN THE TRUSS SPAN, AS WELL AS ALL THE BRIDGE RAILING, AFTER ALL OF THE STRUCTURAL STEEL HAS BEEN ASSEMBLED IN THE FIELD. THE TOP COAT OF THE APPROACH SPAN STRUCTURAL STEEL NEED NOT BE PAINTED IN THE FIELD.

60. WHEN A CONNECTION IS FIELD DRILLED, THE CONTRACTOR SHALL CLEAN ALL SURFACES PRIOR TO BOLTING THE CONNECTION. ALL MEMBERS AND CONNECTION PLATES MUST BE INDIVIDUALLY CLEANED PRIOR TO BOLTING. THIS MAY REQUIRE THE REMOVAL OF CLAMPS OR OTHER DEVICES THAT ARE HOLDING MEMBERS IN PLACE. THE CLEANING SHALL INCLUDE THE REMOVAL OF ALL OIL AND OTHER RESIDUE RESULTING FROM FIELD DRILLING.

61. ANY DAMAGE CAUSED TO THE PAINT SYSTEM, INCLUDING THAT CAUSED BY THE CONCRETE OPERATIONS, SHALL BE REPAIRED PER, AND INCLUDED IN THE BID PRICE FOR, ITEM 900.645, “SPECIAL PROVISION (QC/QA CLEANING AND PAINTING STRUCTURAL COMPONENTS)”.

62. ALL CONTRACTORS PERFORMING CONTAINMENT, CLEANING AND PAINTING FOR THE PROJECT SHALL POSSESS AND MAINTAIN THE APPROPRIATE SOCIETY FOR PROTECTIVE COATINGS (SSPC) CERTIFICATIONS.

SUBSTRUCTURE

63. FOR THE NEW PIER CAP AND ABUTMENT #2 CAP, DOWELS SHALL BE DRILLED AND GROUTED INTO THE EXISTING PIER AND ABUTMENT #2 SUBSTRUCTURES AS SHOWN ON THE PLANS. THE DOWELS SHALL HAVE A 2'-0" MINIMUM EMBEDMENT INTO THE EXISTING SUBSTRUCTURE AND SHALL EXTEND A MINIMUM OF 1'-6" INTO THE NEW CONCRETE, UNLESS NOTED OTHERWISE. PAYMENT FOR THE WORK WILL BE MADE UNDER ITEM 507.16, "DRILLING AND GROUTING DOWELS." AN ESTIMATED QUANTITY OF ITEM 507.11 HAS BEEN INCLUDED IN THE CONTRACT FOR THE DOWELS THEMSELVES.

64. THE PIER AND ABUTMENT #2 REPAIR PLANS WERE DEVELOPED FROM SITE VISITS AND BRIDGE INSPECTION REPORTS AND SHALL BE USED ONLY AS INDICATION OF THE GENERAL CONDITION OF THE SUBSTRUCTURE. A THOROUGH INSPECTION BY THE CONTRACTOR AND RESIDENT ENGINEER SHALL BE CONDUCTED TO IDENTIFY ALL NECESSARY REPAIR AREAS.

65. SUBSTRUCTURE REPAIR WORK SHALL INCLUDE REMOVAL OF UNSOUND AND DELAMINATED CONCRETE AS DIRECTED BY THE ENGINEER AND REPAIRED IN ACCORDANCE WITH ITEMS 580.14, “REPAIR OF CONCRETE SUBSTRUCTURE, CLASS II) AND 580.15, “REPAIR OF CONCRETE SUBSTRUCTURE, CLASS III”.

⚠ 66. SUBSTRUCTURE CONCRETE REPAIR WORK AT THE PIER AND ABUTMENT #2 SHALL BE CONDUCTED UNDER DRY CONDITIONS. ADDITIONAL WORK NECESSARY TO COMPLETE CONCRETE REPAIRS IN THE DRY SHALL BE INCIDENTAL TO ITEMS 501.35, “CONCRETE HIGH PERFORMANCE CLASS SCC”, 580.14, “REPAIR OF CONCRETE SUBSTRUCTURE, CLASS II)” AND 580.15, “REPAIR OF CONCRETE SUBSTRUCTURE, CLASS III”.

67. ITEM 505.12, "STEEL PILING, HP 12 X 63” SHALL BE USED FOR ALL PILING NECESSARY FOR THE CONSTRUCTION OF ABUTMENT #1.

68. THE PILES SHALL BE DRIVEN TO A NOMINAL RESISTANCE OF 350 KIPS. A MINIMUM OF TWO DYNAMIC PILE TEST SHALL BE CONDUCTED AT ABUTMENT 1. PAYMENT WILL BE MADE UNDER ITEM 505.45, "DYNAMIC PILE LOADING TEST".

69. REINFORCED DRIVING TIPS SHALL BE REQUIRED AND SHALL CONFORM TO SUBSECTION 505.04(F) OF THE STANDARD SPECIFICATIONS.

70. FOR ESTIMATING PURPOSES, THE PILE TIP ELEVATIONS WERE ASSUMED AND ARE SHOWN ON THE BORING LOGS. THE ACTUAL IN PLACE LENGTHS MAY VARY. PILES SHALL HAVE A MINIMUM EMBEDMENT OF 30FT MEASURED FROM THE BOTTOM OF THE PILE CAP OR BE DRIVEN TO BEDROCK.

REVISION	DATE	BY	DESCRIPTION
⚠	11/27/2017	VAOT	CHANGES DUE TO NOTE NUMBERING

PROJECT NAME: RICHFORD-SUTTON, PQ
PROJECT NUMBER: BHF 0814(I)

FILE NAME: s10c222forms.dgn
PROJECT LEADER: C. CARLSON
DESIGNED BY: C. BURRALL
PROJECT NOTES 2

PLOT DATE: 21-NOV-2017
DRAWN BY: C. BURRALL
CHECKED BY: G. ROKES
SHEET 6 OF 87

STATE OF VERMONT
AGENCY OF TRANSPORTATION

QUANTITY SHEET 1

SUMMARY OF ESTIMATED QUANTITIES					TOTALS		DESCRIPTIONS			
ROADWAY	ROADWAY (NO FED/STATE PARTICIPATIO	EPSC	EPSC (NO FED/STATE PARTICIPATIO	BRIDGE 3	FULL CE ITEMS	GRAND TOTAL	FINAL	UNIT	ITEMS	ITEM NUMBER	ROUND
1						1		LS	CLEARING AND GRUBBING, INCLUDING INDIVIDUAL TREES AND STUMPS	201.10	
190	130					320		CY	COMMON EXCAVATION	203.15	
				160		160		CY	UNCLASSIFIED CHANNEL EXCAVATION	203.27	
2	7					9		CY	TRENCH EXCAVATION OF EARTH	204.20	
1						1		CY	TRENCH EXCAVATION OF EARTH, EXPLORATORY (N.A.B.I.)	204.22	
				70		70		CY	STRUCTURE EXCAVATION	204.25	
				40		40		CY	GRANULAR BACKFILL FOR STRUCTURES	204.30	
280	200					480		SY	COLD PLANING, BITUMINOUS PAVEMENT	210.10	
120	70					190		CY	SUBBASE OF DENSE GRADED CRUSHED STONE	301.35	
10	10					20		CY	AGGREGATE SURFACE COURSE	401.10	
2	2					4		CWT	EMULSIFIED ASPHALT	404.65	
1						1		LU	PRICE ADJUSTMENT, ASPHALT CEMENT (N.A.B.I.)	406.50	
				51		51		CY	CONCRETE, HIGH PERFORMANCE CLASS A	501.33	
				46		46		CY	CONCRETE, HIGH PERFORMANCE CLASS B	501.34	
				10		10		CY	CONCRETE, HIGH PERFORMANCE CLASS SCC	501.35	
				1		1		LS	SHORING SUPERSTRUCTURE	502.10	
				4		4		EACH	SHORING SUPERSTRUCTURE BEARINGS	502.11	
				1		1		LS	FURNISHING EQUIPMENT FOR DRIVING PILING	504.10	
				248		248		LF	STEEL PILING, HP 12 X 63	505.155	
				2		2		EACH	DYNAMIC PILE LOADING TEST	505.45	
				78140		78140		LB	STRUCTURAL STEEL, ROLLED BEAM	506.50	
				19040		19040		LB	STRUCTURAL STEEL, TRUSS	506.57	
				1200		1200		LB	STRUCTURAL STEEL	506.60	
				3550		3550		LB	REINFORCING STEEL, LEVEL I (BLACK)	507.11	
				8930		8930		LB	REINFORCING STEEL, LEVEL I (EPOXY COATED)	507.11	
				400		400		LF	DRILLING AND GROUTING DOWELS	507.16	
				460		460		SY	LONGITUDINAL DECK GROOVING	509.10	
				60		60		GAL	WATER REPELLENT, SILANE	514.10	
				22		22		LF	BRIDGE EXPANSION JOINT, ASPHALTIC PLUG (FPQ)	516.10	
				24		24		LF	BRIDGE EXPANSION JOINT, VERMONT (FPQ)	516.11	
				44		44		LF	JOINT SEALER, HOT POURED	524.11	
				1		1		EACH	PARTIAL REMOVAL OF STRUCTURE (8100 SF - EST)	529.20	
				4		4		EACH	BEARING DEVICE ASSEMBLY, STEEL REINFORCED ELASTOMERIC PAD (ABUTMENT #1)	531.17	
				2		2		EACH	BEARING DEVICE ASSEMBLY, ELASTOMERIC PAD W/ EXT. LOAD PLATES (ABUTMENT #2)	531.18	
				4		4		EACH	BEARING DEVICE ASSEMBLY, ELASTOMERIC PAD W/ EXT. LOAD PLATES (APPROACH SPAN PIER)	531.18	
				2		2		EACH	BEARING DEVICE ASSEMBLY, ELASTOMERIC PAD W/ EXT. LOAD PLATES (TRUSS SPAN PIER)	531.18	
				20		20		SY	REPAIR OF CONCRETE SUBSTRUCTURE SURFACE, CLASS II	580.14	
				10		10		CY	REPAIR OF CONCRETE SUBSTRUCTURE SURFACE, CLASS III	580.15	

DETAILED SUMMARY OF QUANTITIES

QUANTITIES	UNIT	ITEMS
		EARTHWORKS SUMMARY
		FILL AVAILABLE
192	CY	COMMON EXCAVATION (320 CY X .6)
48	CY	UNCLASSIFIED CHANNEL EXCAVATION (160 X 0.3)
5	CY	TRENCH EXCAVATION OF EARTH (9 X .6)
21	CY	STRUCTURE EXCAVATION (70 X 0.3)
4	CY	ROUNDING
270	**CY**	**TOTAL FILL AVAILABLE**
		FILL REQUIRED
0	CY	FILL (0 X 1.15)
0	**CY**	**TOTAL FILL REQUIRED**
		COMMON EXCAVATION
190	CY	VT 105A (USA)
130	CY	VT 15 (CAN)
		COLD PLANING, BITUMINOUS PAVEMENT
280	SY	VT 105A (USA)
200	SY	VT 15 (CAN)
		SUBBASE OF DENSE GRADED CRUSHED STONE
120	CY	VT 105A (USA)
70	CY	VT 15 (CAN)
		AGGREGATE SURFACE COURSE
10	CY	VT 105A (USA)
10	CY	VT 15 (CAN)
		EMULSIFIED ASPHALT
2	CWT	VT 105A (USA)
2	CWT	VT 15 (CAN)
		SPECIAL PROVISION (BITUMINOUS CONCRETE PAVEMENT, SMALL QUANTITY)
60	TON	VT 105A (USA)
60	TON	VT 15 (CAN)

PROJECT NAME: RICHFORD-SUTTON, PQ
PROJECT NUMBER: BHF 0814(I)

FILE NAME: s10c222qty.dgn
PROJECT LEADER: C. CARLSON
DESIGNED BY: C. BURRALL
QUANTITY SHEET I

PLOT DATE: 26-SEP-2017
DRAWN BY: G. ROKES
CHECKED BY: C. BURRALL
SHEET 7 OF 87

STATE OF VERMONT
AGENCY OF TRANSPORTATION

QUANTITY SHEET 2

SUMMARY OF ESTIMATED QUANTITIES					TOTALS		DESCRIPTIONS			
ROADWAY	ROADWAY (NO FED/STATE PARTICIPATIO	EPSC	EPSC (NO FED/STATE PARTICIPATIO	BRIDGE 3	FULL CE ITEMS	GRAND TOTAL	FINAL	UNIT	ITEMS	ITEM NUMBER	ROUND
		60				60		CY	STONE FILL, TYPE II	613.11	
				160		160		CY	STONE FILL, TYPE III	613.12	
92	82					174		LF	HD STEEL BEAM GUARDRAIL, GALVANIZED (FPQ)	621.21	
44						44		LF	HD STEEL BEAM GUARDRAIL, GALVANIZED W/8 FEET POSTS (FPQ)	621.215	
2	2					4		EACH	ANCHOR FOR STEEL BEAM RAIL	621.60	
165	145					310		LF	REMOVAL AND DISPOSAL OF GUARDRAIL	621.80	
50						50		HR	UNIFORMED TRAFFIC OFFICERS	630.10	
500						500		HR	FLAGGERS	630.15	
					1	1		LS	FIELD OFFICE, ENGINEERS	631.10	
					1	1		LS	TESTING EQUIPMENT, CONCRETE	631.16	
					1	1		LS	TESTING EQUIPMENT, BITUMINOUS	631.17	
					2000	2000		DL	FIELD OFFICE TELEPHONE (N.A.B.I.)	631.26	
				1		1		LS	MOBILIZATION/DEMOBILIZATION	635.11	
3						3		EACH	PORTABLE CHANGEABLE MESSAGE SIGN	641.15	
200						200		LF	4 INCH WHITE LINE	646.20	
	85					85		LF	4 INCH YELLOW LINE (FPQ)	646.21	
725						725		LF	4 INCH YELLOW LINE	646.21	
23						23		LF	24 INCH STOP BAR	646.26	
4						4		EACH	LETTER OR SYMBOL	646.30	
		240				240		SY	GEOTEXTILE UNDER STONE FILL	649.31	
		95	35			130		SY	GEOTEXTILE FOR SILT FENCE, WOVEN WIRE REINFORCED	649.515	
		25	35			60		SY	GEOTEXTILE FOR FILTER CURTAIN	649.61	
		5	5			10		LB	SEED	651.15	
		5	5			10		LB	SEED, WINTER RYE	651.17	
		10	10			20		LB	FERTILIZER	651.18	
		0.1	0.1			0.2		TON	AGRICULTURAL LIMESTONE	651.20	
		0.1	0.1			0.2		TON	STRAW MULCH	651.29	
		8	12			20		CY	TOPSOIL	651.35	
		160				160		SY	GRUBBING MATERIAL	651.40	
		1				1		LS	EPSC PLAN	652.10	
		40				40		HR	MONITORING EPSC PLAN	652.20	
		1				1		LU	MAINTENANCE OF EPSC PLAN (N.A.B.I.)	652.30	
			70			70		SY	TEMPORARY EROSION MATTING	653.20	
		15	15			30		CY	VEHICLE TRACKING PAD	653.35	
		225				225		LF	BARRIER FENCE	653.50	
		135	165			300		LF	PROJECT DEMARCATION FENCE	653.55	
25	24					49		SF	TRAFFIC SIGNS, TYPE A	675.20	
84	24					108		LF	SQUARE TUBE SIGN POST AND ANCHOR	675.341	
13	3					16		EACH	REMOVING SIGNS	675.50	
8						8		EACH	ERECTING SALVAGED SIGNS	675.60	

DETAILED SUMMARY OF QUANTITIES

QUANTITIES	UNIT	ITEMS

PROJECT NAME: RICHFORD-SUTTON, PQ
PROJECT NUMBER: BHF 0814(I)

FILE NAME: s10c222qty.dgn
PROJECT LEADER: C. CARLSON
DESIGNED BY: C. BURRALL
QUANTITY SHEET 2

PLOT DATE: 26-SEP-2017
DRAWN BY: G. ROKES
CHECKED BY: C. BURRALL
SHEET 8 OF 87

STATE OF VERMONT
AGENCY OF TRANSPORTATION

QUANTITY SHEET 3

SUMMARY OF ESTIMATED QUANTITIES						TOTALS		DESCRIPTIONS			
ROADWAY	ROADWAY (NO FED/STATE PARTICIPATIO	EPSC	EPSC (NO FED/STATE PARTICIPATIO	BRIDGE 3	FULL CE ITEMS	GRAND TOTAL	FINAL	UNIT	ITEMS	ITEM NUMBER	ROUND
6	4					10		EACH	DELINEATOR WITH STEEL POST	676.10	
1						1		LU	PRICE ADJUSTMENT, FUEL (N.A.B.I.)	690.50	
				7		7		EACH	SPECIAL PROVISION (CPM SCHEDULE)	900.620	
2	2					4		EACH	SPECIAL PROVISION (GUARDRAIL APPROACH SECTION, GALVANIZED 2 RAIL BOX BEAM W/ 8-FT POST)	900.620	
1						1		EACH	SPECIAL PROVISION (NATIONAL WILD AND SCENIC RIVERS SIGNAGE)	900.620	
				40		40		GAL	SPECIAL PROVISION (CONCRETE STAINING AND SEALING)	900.625	
				322		322		LF	SPECIAL PROVISION (BRIDGE RAILING, GALVANIZED 2 RAIL BOX BEAM/ CURB AND TRUSS MOUNTED)	900.640	
				122		122		LF	SPECIAL PROVISION (BRIDGE RAILING, GALVANIZED 2 RAIL BOX BEAM/ CURB MOUNTED)	900.640	
				1		1		LS	SPECIAL PROVISION (CONTAINMENT AND DISPOSAL OF LEAD PAINT CLEANING RESIDUES)	900.645	
				1		1		LS	SPECIAL PROVISION (QC/QA CLEANING AND PAINTING STRUCTURAL COMPONENTS)	900.645	
1						1		LS	SPECIAL PROVISION (TRAFFIC CONTROL, ALL-INCLUSIVE)	900.645	
1						1		LU	SPECIAL PROVISION (MAT DENSITY PAY ADJUSTMENT, SMALL QUANTITY)(N.A.B.I.)	900.650	
1						1		LU	SPECIAL PROVISION (MIXTURE PAY ADJUSTMENT)(N.A.B.I.)	900.650	
				4520		4520		SF	SPECIAL PROVISION (HALF-FILLED GRID DECK)(FPQ)	900.670	
60	60					120		TON	SPECIAL PROVISION (BITUMINOUS CONCRETE PAVEMENT, SMALL QUANTITY)	900.680	

DETAILED SUMMARY OF QUANTITIES		
QUANTITIES	UNIT	ITEMS

PROJECT NAME: RICHFORD-SUTTON, PQ
PROJECT NUMBER: BHF 0814(1)

FILE NAME: s10c222qty.dgn
PROJECT LEADER: C. CARLSON
DESIGNED BY: C. BURRALL
QUANTITY SHEET 3

PLOT DATE: 26-SEP-2017
DRAWN BY: G. ROKES
CHECKED BY: C. BURRALL
SHEET 9 OF 87

STATE OF VERMONT
AGENCY OF TRANSPORTATION

BRIDGE QUANTITY SHEET 1

SUMMARY OF BRIDGE QUANTITIES					TOTALS	DESCRIPTIONS			DETAILED SUMMARY OF QUANTITIES		
SUPERSTRUCTURE	APPROACH SLAB 1	ABUTMENT 1	PIER	ABUTMENT 2	BRIDGE TOTAL	UNIT	ITEMS	ITEM NUMBER	QUANTITIES	UNIT	ITEMS
		160			160	CY	UNCLASSIFIED CHANNEL EXCAVATION	203.27			
		64		6	70	CY	STRUCTURE EXCAVATION	204.25			
		34		6	40	CY	GRANULAR BACKFILL FOR STRUCTURES	204.30			
		15	12	24	51	CY	CONCRETE, HIGH PERFORMANCE CLASS A	501.33			
	14	32			46	CY	CONCRETE, HIGH PERFORMANCE CLASS B	501.34			
				10	10	CY	CONCRETE, HIGH PERFORMANCE CLASS SCC	501.35			
1					1	LS	SHORING SUPERSTRUCTURE	502.10			
4					4	EACH	SHORING SUPERSTRUCTURE BEARINGS	502.11			
		1			1	LS	FURNISHING EQUIPMENT FOR DRIVING PILING	504.10			
		248			248	LF	STEEL PILING, HP 12 X 63	505.155			
		2			2	EACH	DYNAMIC PILE LOADING TEST	505.45			
78140					78140	LB	STRUCTURAL STEEL, ROLLED BEAM	506.50			
19040					19040	LB	STRUCTURAL STEEL, TRUSS	506.57			
1200					1200	LB	STRUCTURAL STEEL	506.60			
		3380	85	85	3550	LB	REINFORCING STEEL, LEVEL I (BLACK)	507.11			
	1713	3242	1010	2965	8930	LB	REINFORCING STEEL, LEVEL I (EPOXY COATED)	507.11			
			151	249	400	LF	DRILLING AND GROUTING DOWELS	507.16			
460					460	SY	LONGITUDINAL DECK GROOVING	509.10			
52		8			60	GAL	WATER REPELLENT, SILANE	514.10			
22					22	LF	BRIDGE EXPANSION JOINT, ASPHALTIC PLUG (FPQ)	516.10			
24					24	LF	BRIDGE EXPANSION JOINT, VERMONT (FPQ)	516.11			
44					44	LF	JOINT SEALER, HOT POURED	524.11			
1					1	EACH	PARTIAL REMOVAL OF STRUCTURE (8100 SF - EST)	529.20			
	4				4	EACH	BEARING DEVICE ASSEMBLY, STEEL REINFORCED ELASTOMERIC PAD (ABUTMENT #1)	531.17			
			2		2	EACH	BEARING DEVICE ASSEMBLY, ELASTOMERIC PAD W/ EXT. LOAD PLATES (ABUTMENT #2)	531.18			
			4		4	EACH	BEARING DEVICE ASSEMBLY, ELASTOMERIC PAD W/ EXT. LOAD PLATES (APPROACH SPAN PIER)	531.18			
				2	2	EACH	BEARING DEVICE ASSEMBLY, ELASTOMERIC PAD W/ EXT. LOAD PLATES (TRUSS SPAN PIER)	531.18			
			10	10	20	SY	REPAIR OF CONCRETE SUBSTRUCTURE SURFACE, CLASS II	580.14			
			5	5	10	CY	REPAIR OF CONCRETE SUBSTRUCTURE SURFACE, CLASS III	580.15			
		160			160	CY	STONE FILL, TYPE III	613.12			
1					1	LS	MOBILIZATION/DEMOBILIZATION	635.11			
7					7	EACH	SPECIAL PROVISION (CPM SCHEDULE)	900.620			
			19	21	40	GAL	SPECIAL PROVISION (CONCRETE STAINING AND SEALING)	900.625			
322					322	LF	SPECIAL PROVISION (BRIDGE RAILING, GALVANIZED 2 RAIL BOX BEAM/ CURB AND TRUSS MOUNTED)	900.640			
122					122	LF	SPECIAL PROVISION (BRIDGE RAILING, GALVANIZED 2 RAIL BOX BEAM/ CURB MOUNTED)	900.640			
1					1	LS	SPECIAL PROVISION (CONTAINMENT AND DISPOSAL OF LEAD PAINT CLEANING RESIDUES)	900.645			
1					1	LS	SPECIAL PROVISION (QC/QA CLEANING AND PAINTING STRUCTURAL COMPONENTS)	900.645			

PROJECT NAME: RICHFORD-SUTTON, PQ
PROJECT NUMBER: BHF 0814(I)

FILE NAME: s10c222qty.dgn
PROJECT LEADER: C. CARLSON
DESIGNED BY: C. BURRALL
BRIDGE QUANTITY SHEET I

PLOT DATE: 26-SEP-2017
DRAWN BY: G. ROKES
CHECKED BY: C. BURRALL
SHEET 10 OF 87

STATE OF VERMONT
AGENCY OF TRANSPORTATION

BRIDGE QUANTITY SHEET 2

SUMMARY OF BRIDGE QUANTITIES																					TOTALS		DESCRIPTIONS					DETAILED SUMMARY OF QUANTITIES		
												SUPERSTRUCTURE		APPROACH SLAB 1		ABUTMENT 1		PIER		ABUTMENT 2	BRIDGE TOTAL		UNIT	ITEMS	ITEM NUMBER			QUANTITIES	UNIT	ITEMS
												4520									4520		SF	SPECIAL PROVISION (HALF-FILLED GRID DECK)(FPQ)	900.670					

PROJECT NAME: RICHFORD-SUTTON, PQ
PROJECT NUMBER: BHF 0814(1)

FILE NAME: s10c222qty.dgn
PROJECT LEADER: C. CARLSON
DESIGNED BY: C. BURRALL
BRIDGE QUANTITY SHEET 2
PLOT DATE: 26-SEP-2017
DRAWN BY: G. ROKES
CHECKED BY: C. BURRALL
SHEET 11 OF 87

GENERAL INFORMATION

SYMBOLOGY LEGEND NOTE

THE SYMBOLOGY ON THIS SHEET IS INTENDED TO COVER STANDARD CONVENTIONAL SYMBOLOGY. THE SYMBOLOGY IS USED FOR EXISTING & PROPOSED FEATURES WITH HEAVIER LINEWEIGHT, IN COMBINATION WITH PROJECT ANNOTATION, AS NOTED ON PROJECT PLAN SHEETS. THIS LEGEND SHEET COVERS THE BASICS. SYMBOLOGY ON PLANS MAY VARY, PLAN ANNOTATIONS AND NOTES SHOULD BE USED TO CLARIFY AS NEEDED.

R.O.W. ABBREVIATIONS (CODES) & SYMBOLS

POINT	CODE	DESCRIPTION
	CH	CHANNEL EASEMENT
	CONST	CONSTRUCTION EASEMENT
	CUL	CULVERT EASEMENT
	D&C	DISCONNECT & CONNECT
	DIT	DITCH EASEMENT
	DR	DRAINAGE EASEMENT
	DRIVE	DRIVEWAY EASEMENT
	EC	EROSION CONTROL
	HWY	HIGHWAY EASEMENT
	I&M	INSTALL & MAINTAIN EASEMENT
	LAND	LANDSCAPE EASEMENT
	R&RES	REMOVE & RESET
	R&REP	REMOVE & REPLACE
	SR	SLOPE RIGHT
	UE	UTILITY EASEMENT
	(P)	PERMANENT EASEMENT
	(T)	TEMPORARY EASEMENT
■	BNDNS	BOUND SET
⊡	BNDNS	BOUND TO BE SET
◎	IPNF	IRON PIN FOUND
●	IPNS	IRON PIN TO BE SET
⊠	CALC	EXISTING ROW POINT
○	PROW	PROPOSED ROW POINT
[LENGTH]		LENGTH CARRIED ON NEXT SHEET

COMMON TOPOGRAPHIC POINT SYMBOLS

POINT	CODE	DESCRIPTION
	APL	BOUND APPARENT LOCATION
	BM	BENCHMARK
	BND	BOUND
	CB	CATCH BASIN
	COMB	COMBINATION POLE
	DITHR	DROP INLET THROATED DNC
	EL	ELECTRIC POWER POLE
	FPOLE	FLAGPOLE
	GASFIL	GAS FILLER
	GP	GUIDE POST
	GSO	GAS SHUT OFF
	GUY	GUY POLE
	GUYW	GUY WIRE
	GV	GATE VALVE
	H	TREE HARDWOOD
	HCTRL	CONTROL HORIZONTAL
	HVCTRL	CONTROL HORIZ. & VERTICAL
	HYD	HYDRANT
	IP	IRON PIN
	IPIPE	IRON PIPE
	LI	LIGHT - STREET OR YARD
	MB	MAILBOX
	MH	MANHOLE (MH)
	MM	MILE MARKER
	PM	PARKING METER
	PMK	PROJECT MARKER
	POST	POST STONE/WOOD
	RRSIG	RAILROAD SIGNAL
	RRSL	RAILROAD SWITCH LEVER
	S	TREE SOFTWOOD
	SAT	SATELLITE DISH
	SHRUB	SHRUB
	SIGN	SIGN
	STUMP	STUMP
	TEL	TELEPHONE POLE
	TIE	TIE
	TSIGN	SIGN W/DOUBLE POST
	VCTRL	CONTROL VERTICAL
	WELL	WELL
	WSO	WATER SHUT OFF

THESE ARE COMMON VAOT SURVEY POINT SYMBOLS FOR EXISTING FEATURES, ALSO USED FOR PROPOSED FEATURES WITH HEAVIER LINEWEIGHT, IN COMBINATION WITH PROPOSED ANNOTATION.

PROPOSED GEOMETRY CODES

CODE	DESCRIPTION
PC	POINT OF CURVATURE
PI	POINT OF INTERSECTION
CC	CENTER OF CURVE
PT	POINT OF TANGENCY
PCC	POINT OF COMPOUND CURVE
PRC	POINT OF REVERSE CURVE
POB	POINT OF BEGINNING
POE	POINT OF ENDING
STA	STATION PREFIX
AH	AHEAD STATION SUFFIX
BK	BACK STATION SUFFIX
D	CURVE DEGREE OF (100FT)
R	CURVE RADUIS OF
T	CURVE TANGENT LENGTH
L	CURVE LENGTH OF
E	CURVE EXTERNAL DISTANCE

UTILITY SYMBOLOGY

UNDERGROUND UTILITIES

UGU	UTILITY (GENERIC-UNKNOWN)
UT	TELEPHONE
UE	ELECTRIC
UC	CABLE (TV)
UEC	ELECTRIC+CABLE
UET	ELECTRIC+TELEPHONE
UCT	CABLE+TELEPHONE
UECT	ELECTRIC+CABLE+TELEP.
G	GAS LINE
W	WATER LINE
S	SANITARY SEWER (SEPTIC)

ABOVE GROUND UTILITIES (AERIAL)

AGU	UTILITY (GENERIC-UNKNOWN)
T	TELEPHONE
E	ELECTRIC
C	CABLE (TV)
EC	ELECTRIC+CABLE
ET	ELECTRIC+TELEPHONE
AER E&T	ELECTRIC+TELEPHONE
CT	CABLE+TELEPHONE
ECT	ELECTRIC+CABLE+TELEP.
	UTILITY POLE GUY WIRE

PROJECT CONSTRUCTION SYMBOLOGY

PROJECT DESIGN & LAYOUT SYMBOLOGY

CZ	CLEAR ZONE
	PLAN LAYOUT MATCHLINE

PROJECT CONSTRUCTION FEATURES

	TOP OF CUT SLOPE
	TOE OF FILL SLOPE
	STONE FILL
	BOTTOM OF DITCH ℄
	CULVERT PROPOSED
	STRUCTURE SUBSURFACE
PDF	PROJECT DEMARCATION FENCE
BF	BARRIER FENCE
	TREE PROTECTION ZONE (TPZ)
	STRIPING LINE REMOVAL
	SHEET PILES

CONVENTIONAL BOUNDARY SYMBOLOGY

BOUNDARY LINES

TOWN LINE	TOWN BOUNDARY LINE
COUNTY LINE	COUNTY BOUNDARY LINE
STATE LINE	STATE BOUNDARY LINE
	PROPOSED STATE R.O.W. (LIMITED ACCESS)
	PROPOSED STATE R.O.W.
	STATE ROW (LIMITED ACCESS)
	STATE ROW
	TOWN ROW
	PERMANENT EASEMENT LINE (P)
	TEMPORARY EASEMENT LINE (T)
	SURVEY LINE
P / L	PROPERTY LINE (P/L)
SR	SLOPE RIGHTS
6f	6F PROPERTY BOUNDARY
4f	4F PROPERTY BOUNDARY
HAZ	HAZARDOUS WASTE

EPSC LAYOUT PLAN SYMBOLOGY

EPSC MEASURES

	FILTER CURTAIN
	SILT FENCE
	SILT FENCE WOVEN WIRE
	CHECK DAM
	DISTURBED AREAS REQUIRING RE-VEGETATION
	EROSION MATTING

SEE EPSC DETAIL SHEETS FOR ADDITIONAL SYMBOLOGY

ENVIRONMENTAL RESOURCES

	WETLAND BOUNDARY
	RIPARIAN BUFFER ZONE
	WETLAND BUFFER ZONE
	SOIL TYPE BOUNDARY
T&E	THREATENED & ENDANGERED SPECIES
HAZ	HAZARDOUS WASTE AREA
AG	AGRICULTURAL LAND
HABITAT	FISH & WILDLIFE HABITAT
FLOOD PLAIN	FLOOD PLAIN
OHW	ORDINARY HIGH WATER (OHW)
	STORM WATER
	USDA FOREST SERVICE LANDS
	WILDLIFE HABITAT SUIT/CONN

ARCHEOLOGICAL & HISTORIC

ARCH	ARCHEOLOGICAL BOUNDARY
HISTORIC DIST	HISTORIC DISTRICT BOUNDARY
HISTORIC	HISTORIC AREA
H	HISTORIC STRUCTURE

CONVENTIONAL TOPOGRAPHIC SYMBOLOGY

EXISTING FEATURES

	ROAD EDGE PAVEMENT
	ROAD EDGE GRAVEL
	DRIVEWAY EDGE
	DITCH
	FOUNDATION
	FENCE (EXISTING)
	FENCE WOOD POST
	FENCE STEEL POST
	GARDEN
	ROAD GUARDRAIL
	RAILROAD TRACKS
	CULVERT (EXISTING)
	STONE WALL
	WALL
	WOOD LINE
	BRUSH LINE
	HEDGE
	BODY OF WATER EDGE
	LEDGE EXPOSED

PROJECT NAME: RICHFORD-SUTTON, PQ
PROJECT NUMBER: BHF 0814(1)

FILE NAME: s10c222epscdet.dgn
PROJECT LEADER: C. CARLSON
DESIGNED BY: C. BURRALL
CONVENTIONAL SYMBOLOGY- LEGEND

PLOT DATE: 26-SEP-2017
DRAWN BY: G. ROKES
CHECKED BY: C. BURRALL
SHEET 12 OF 87

GPS CONTROL POINTS

HVCTRL #1

GROSS

NORTH = 914490.7360
EAST = 1617660.0750
ELEV. = 504.226

GENERAL LOCATION, RICHFORD, VT. THE MARK IS SET FLUSH WITH GROUND SURFACE IN THE TOP OF AN OLD CONCRETE FOUNDATION. IT IS 15.8 M SE OF AND ABOUT LEVEL WITH THE CENTERLINE OF SLIDE ROAD, 9.7 M NORTH OF THE NW CORNER OF A BARN, 22.2 M WEST OF THE NE CORNER OF THE BARN, 8.4 M NE OF THE CENTERLINE OF THE DRIVE LEADING TO HOUSE NO 14, 19.9 M NE OF POLE NO 141, 19.2 M NORTH OF THE NE CORNER OF THE HOUSE, AND 9.7 M SW OF THE CENTER OF A CAST IRON PLANTER.

HVCTRL #2=79

NORTH = 914325.3920
EAST = 1617197.7720
ELEV. = 502.773

POINT #2 IS #79 FROM Richford STP 2916(1) [10C234]

TRAVERSE TIES

HVCTRL #2

NORTH = 914325.3920
EAST = 1617197.7720
ELEV. = 502.773

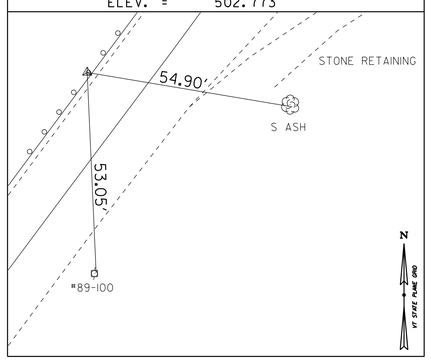

HVCTRL #3

NORTH = 915078.1660
EAST = 1617792.5930
ELEV. = 508.589

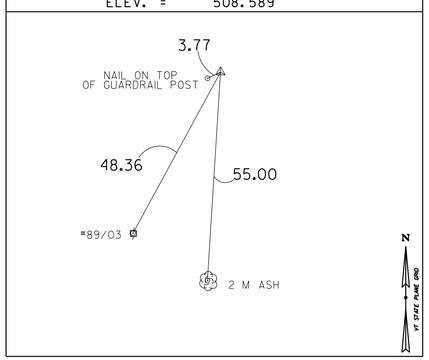

HVCTRL #4

NORTH = 915353.1500
EAST = 1617806.5200
ELEV. = 509.555

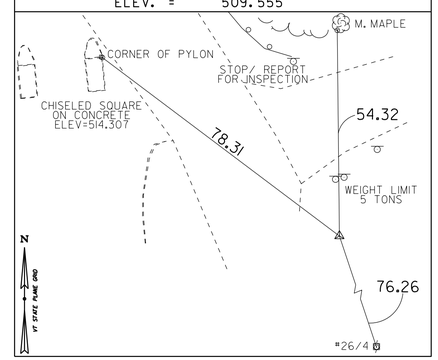

HVCTRL #5

NORTH =
EAST =
ELEV. =

HVCTRL #6

NORTH =
EAST =
ELEV. =

CONTROL LINE DATA - VT 105A BRIDGE

POINT ID	BEARING	DISTANCE (FEET)	NORTHING (Y)	EASTING (X)	PC	PI	PT	DELTA	R	L	T
16	N 24°21'24.11" W	17.16 '	915348.754	1617787.669		58+25.00					
	N 39°00'00.00" W	298.34 '	915411.2047	1617759.397	58+42.16		59+44.39	14°38'35.89"	-400.00 '	102.23 '	51.39 '
	N 46°25'35.61" E	179.44 '	915736.3289	1617496.116	61+91.33		63+85.16	85°25'35.61"	130.00 '	193.83 '	120.02 '
17			915860.0109	1617626.116		64+44.58					

PROJECT NAME: RICHFORD-SUTTON, PQ
PROJECT NUMBER: BHF 0814(1)

FILE NAME: s10c222tie.dgn
PROJECT LEADER: C. CARLSON
DESIGNED BY: VTRANS
TIE SHEET

PLOT DATE: 26-SEP-2017
DRAWN BY: C. CYR
CHECKED BY: P. BEYOR
SHEET 13 OF 87

STONE FILL, TYPE II
VT-105A
STA 59+24.00 RT - STA 59+87.00 RT
STA 59+56.21 LT - STA 59+87.00 LT

REMOVAL AND DISPOSAL OF GUARDRAIL
TH-39
STA 20+27.00 LT - STA 59+87.00 RT
VT-105A
STA 59+50.00 LT - STA 59+87.00 LT
STA 61+91.92 LT - STA 62+38.00 LT
STA 61+91.92 RT - STA 62+90.43 RT

SPECIAL PROVISION (BRIDGE RAILING, GALVANIZED 2 RAIL BOX BEAM/CURB AND TRUSS MOUNTED)
VT-105A
STA 60+39.00 LT - STA 61+99.33 LT
STA 60+39.00 RT - STA 62+00.70 RT

TRENCH EXCAVATION OF EARTH
VT-105A
STA 61+94.25 22.14' RT - STA 62+05.15 13.63' RT

SPECIAL PROVISION (BRIDGE RAILING, GALVANIZED 2 RAIL BOX BEAM/CURB MOUNTED)
VT-105A
STA 59+78.11 LT/RT - STA 60+39.00 LT/RT

VT STATE PLANE GRID
N

VT 105A STA 60+75.00 =
CHANNEL LINE STA 11+00.00
Δ = 90° LT

PIER ℄
STA 60+39.13

BEGIN APPROACH
STA 58+75.00

BEGIN PROJECT/BRIDGE
STA 59+87.00

PT
STA 59+44.39

VT 105A STA 58+50.00 =
TH 39 STA 20+00.00
Δ = 90° LT

PC
STA 58+42.16

EXISTING R.O.W.

R 25'

58+25

20+00

59+00

VT 105A TO
RICHFORD

60+00

R 24'

N 64°31' 11.73" E
TH-39

R 16'

20+75

PI
STA 58+93.55

EXISTING R.O.W.

EXISTING BORDER STATION GATE. POSTS TO REMAIN DURING CONSTRUCTION.

APPROXIMATE VEHICLE LOOP DETECTOR LOCATION

12+00

S 51°00' 00.00" W

CHANNEL LINE

MISSISQUOI RIVER

11+00

N 39°00' 00.00" W

61+00

10+00

INTERNATIONAL BOUNDARY

UNITED STATES
CANADA

EXISTING TOWN R.O.W.

CURVE (1)
DELTA = 14°38' 36"
D = 14°19' 26"
R = 400.00'
T = 51.39'
L = 102.23'
E = 3.29'

CURVE (2)
DELTA = 85°25' 36"
D = 44°04' 25"
R = 130.00'
T = 120.02'
L = 193.83'
E = 46.93'

END BRIDGE/PROJECT
STA 61+92.18

END APPROACH
STA 62+75.00

PI
STA 63+11.35

R 10'
(TYP)

R 16'

MISSISQUOI VALLEY ROAD
62+00 TO GLEN SUTTON, QC

R 24'

63+00

PC
STA 61+91.33

ANCHOR FOR STEEL BEAM RAIL
TH-39 STA 20+49.22 LT
VT-105A STA 59+55.46 LT
VT-105A STA 62+37.46 LT
VT-105A STA 62+74.30 RT

HD STEEL BEAM GUARDRAIL, GALVANIZED
TH-39
STA 20+20.94 LT - STA 20+57.91 LT
VT-105A
STA 58+64.69 RT - STA 59+10.41 RT
STA 62+22.28 LT - STA 62+42.84 LT
STA 62+28.18 RT - STA 62+84.65 RT

HD STEEL BEAM GUARDRAIL, GALVANIZED W/ 8-FT POST
VT-105A
STA 59+10.41 RT - STA 59+53.14 RT

SPECIAL PROVISION (GUARDRAIL APPROACH SECTION, GALVANIZED 2 RAIL BOX BEAM W/8-FT POST)
VT-105A
STA 59+53.84 LT - STA 59+78.11 LT
STA 59+53.14 RT - STA 59+78.11 RT
STA 61+99.33 LT - STA 62+22.28 LT
STA 62+00.70 RT - STA 62+28.18 RT

PT
STA 63+85.16

64+00

N 46°25' 35.61" E

64+45

POE
STA 64+44.58

EXISTING BRIDGE DATA
-- APPROACH SPAN
STEEL BEAM W/ STEEL GRID
CONCRETE FILLED DECK
HORIZONTAL SPAN 51'
VERTICAL CLEAR 22'(+/-)
-- MAIN SPAN
STEEL TRUSS BRIDGE W/ STEEL
GRID CONCRETE FILLED DECK
HORIZONTAL SPAN 151'
VERTICAL CLEAR 24'(+/-)
BUILT 1929, REHAB 1979

SCALE 1" = 20'-0"
20 0 20

PROJECT NAME: RICHFORD-SUTTON, PQ	
PROJECT NUMBER: BHF 0814(1)	
FILE NAME: s10c222bdr.dgn	PLOT DATE: 31-OCT-2017
PROJECT LEADER: C. CARLSON	DRAWN BY: G. ROKES
DESIGNED BY: C. BURRALL	CHECKED BY: C. BURRALL
LAYOUT SHEET	SHEET 14 OF 87

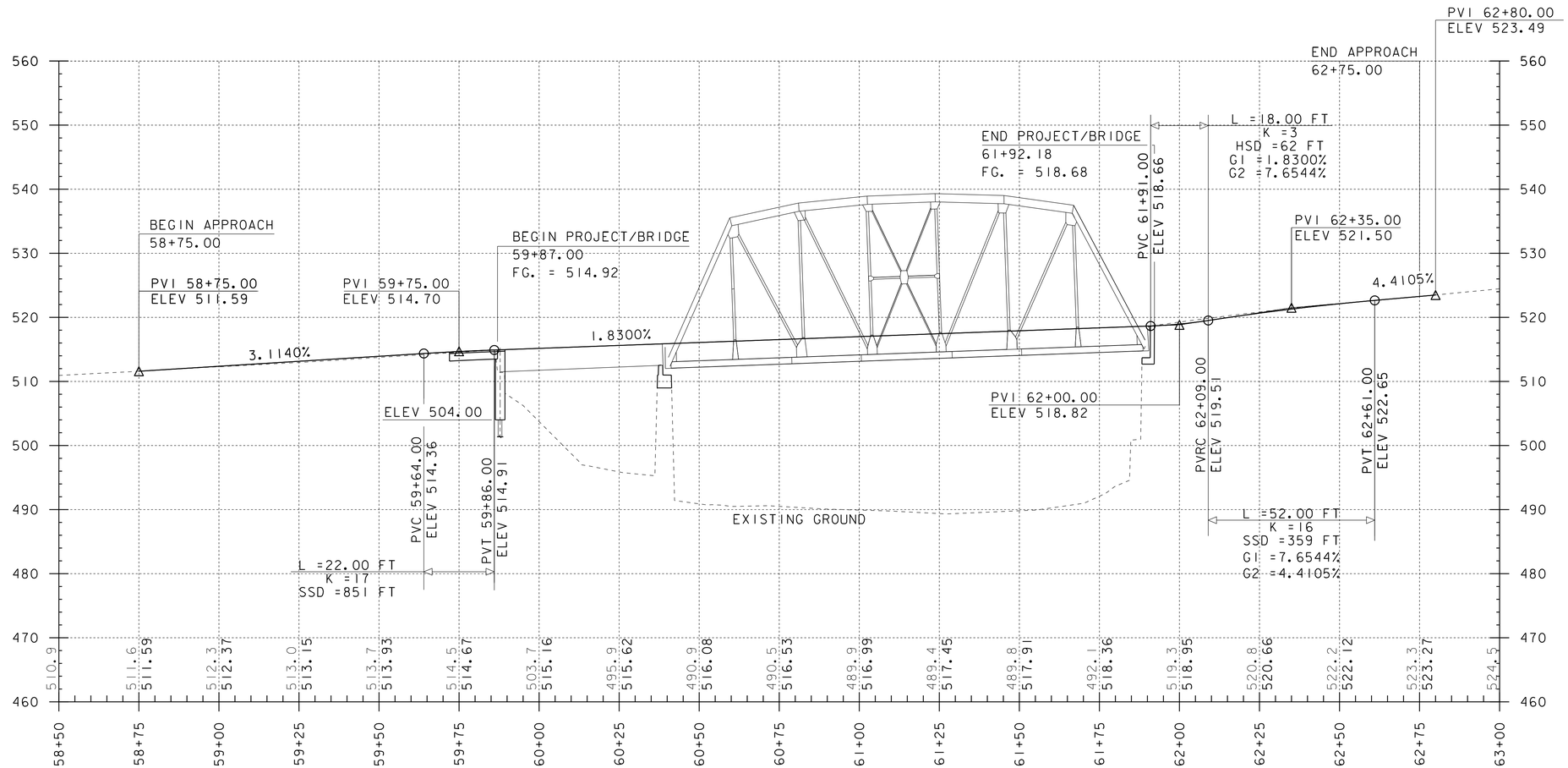

PROFILE ALONG VT 105A

HORIZONTAL SCALE: 1" = 20'-0"
VERTICAL SCALE: 1" = 10'-0"

PROFILE SHOWN IS A BEST FIT TO MATCH EXISTING GRADE WITH TRUSS ENTRANCE AND EXIT GRADE CHANGES. ALL ELEVATIONS FOR TRUSS REHABILITATION SHALL BE FIELD VERIFIED.

NOTE:

ELEVATIONS SHOWN TO THE NEAREST TENTH ARE EXISTING GROUND ALONG PROPOSED CENTERLINE.

ELEVATIONS SHOWN TO THE NEAREST HUNDREDTH ARE FINISH GRADES ALONG PROPOSED CENTERLINE.

PROJECT NAME: RICHFORD-SUTTON, PQ	
PROJECT NUMBER: BHF 0814(1)	
FILE NAME: s10c222pro.dgn	PLOT DATE: 26-SEP-2017
PROJECT LEADER: C. CARLSON	DRAWN BY: G. ROKES
DESIGNED BY: C. BURRALL	CHECKED BY: C. BURRALL
VT 105A PROFILE	SHEET 15 OF 87

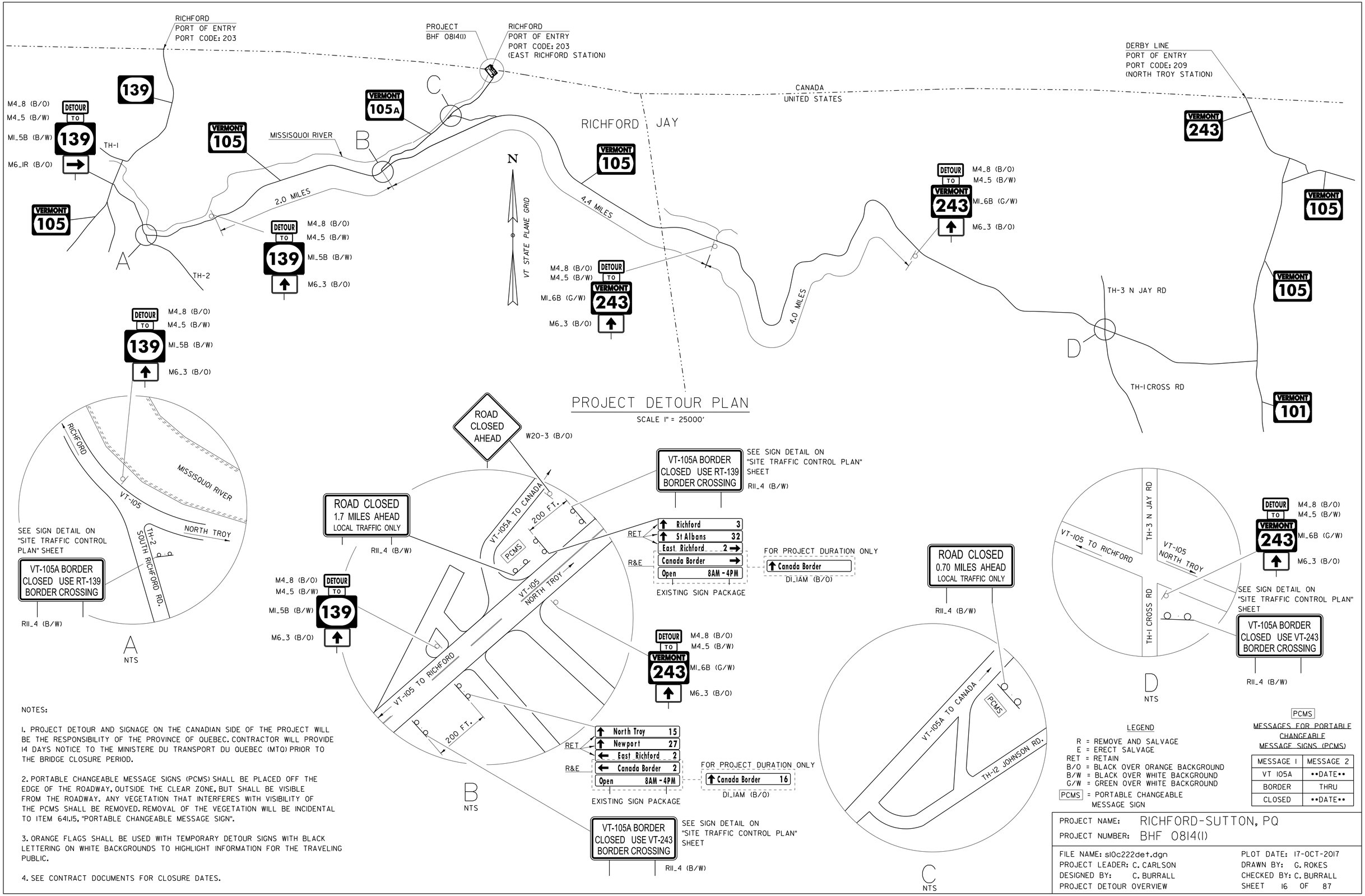

NOTES:

1. PROJECT DETOUR AND SIGNAGE ON THE CANADIAN SIDE OF THE PROJECT WILL BE THE RESPONSIBILITY OF THE PROVINCE OF QUEBEC. CONTRACTOR WILL PROVIDE 14 DAYS NOTICE TO THE MINISTERE DU TRANSPORT DU QUEBEC (MTQ) PRIOR TO THE BRIDGE CLOSURE PERIOD.

2. PORTABLE CHANGEABLE MESSAGE SIGNS (PCMS) SHALL BE PLACED OFF THE EDGE OF THE ROADWAY, OUTSIDE THE CLEAR ZONE, BUT SHALL BE VISIBLE FROM THE ROADWAY. ANY VEGETATION THAT INTERFERES WITH VISIBILITY OF THE PCMS SHALL BE REMOVED. REMOVAL OF THE VEGETATION WILL BE INCIDENTAL TO ITEM 641.15, "PORTABLE CHANGEABLE MESSAGE SIGN".

3. ORANGE FLAGS SHALL BE USED WITH TEMPORARY DETOUR SIGNS WITH BLACK LETTERING ON WHITE BACKGROUNDS TO HIGHLIGHT INFORMATION FOR THE TRAVELING PUBLIC.

4. SEE CONTRACT DOCUMENTS FOR CLOSURE DATES.

LEGEND

R = REMOVE AND SALVAGE
E = ERECT SALVAGE
RET = RETAIN
B/O = BLACK OVER ORANGE BACKGROUND
B/W = BLACK OVER WHITE BACKGROUND
G/W = GREEN OVER WHITE BACKGROUND
PCMS = PORTABLE CHANGEABLE MESSAGE SIGN

PCMS
MESSAGES FOR PORTABLE CHANGEABLE MESSAGE SIGNS (PCMS)

MESSAGE 1	MESSAGE 2
VT 105A	••DATE••
BORDER	THRU
CLOSED	••DATE••

PROJECT NAME: RICHFORD-SUTTON, PQ
PROJECT NUMBER: BHF 0814(I)

FILE NAME: s10c222det.dgn
PROJECT LEADER: C. CARLSON
DESIGNED BY: C. BURRALL
PROJECT DETOUR OVERVIEW

PLOT DATE: 17-OCT-2017
DRAWN BY: G. ROKES
CHECKED BY: C. BURRALL
SHEET 16 OF 87

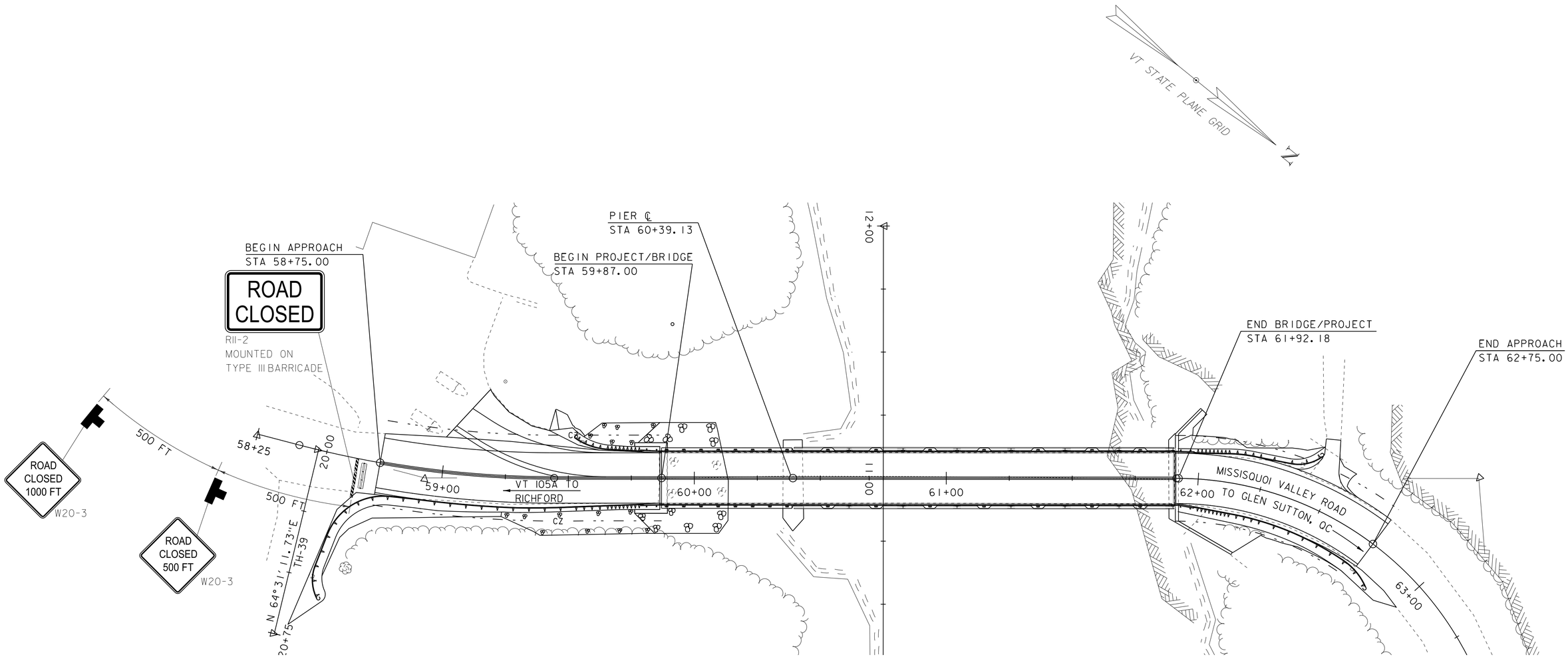

SITE TRAFFIC CONTROL PLAN

SCALE 1" = 20'-0"

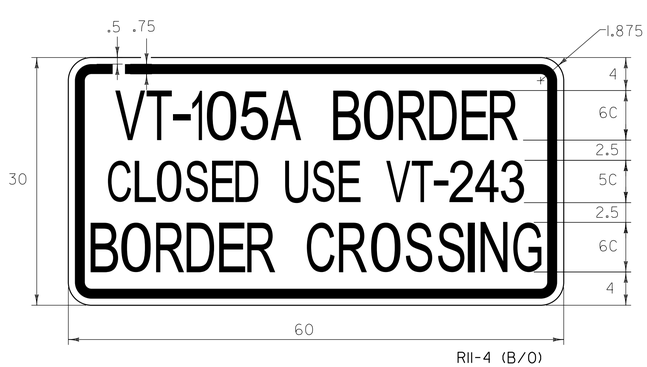

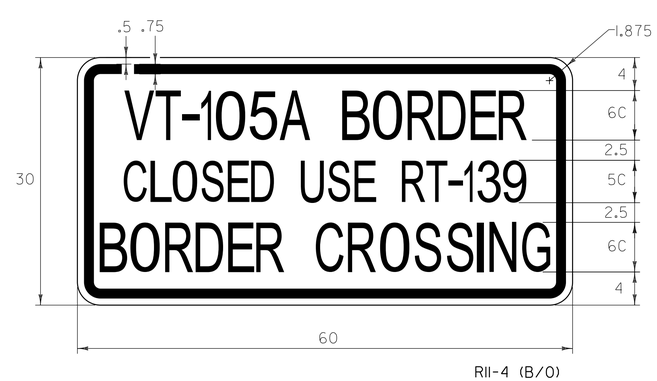

SIGN DETAILS FOR "PROJECT DETOUR OVERVIEW" SHEET

NTS

LEGEND

TEMPORARY BARRIER

TYPE III BARRICADE

NOTES:

1. SITE SPECIFIC TRAFFIC CONTROL MEASURES ON THE CANADIAN SIDE OF THE PROJECT WILL BE THE RESPONSIBILITY OF THE PROVINCE OF QUEBEC.

PROJECT NAME: RICHFORD-SUTTON, PQ	
PROJECT NUMBER: BHF 0814(1)	
FILE NAME: s10c222det.dgn	PLOT DATE: 24-OCT-2017
PROJECT LEADER: C. CARLSON	DRAWN BY: G. ROKES
DESIGNED BY: C. BURRALL	CHECKED BY: C. BURRALL
SITE TRAFFIC CONTROL PLAN	SHEET 17 OF 87

NOTE:

THE CONTRACTOR SHALL COORDINATE WITH THE U.S. BORDER PATROL STATION AS TO THE EXACT LOCATION OF THE STOP BAR.

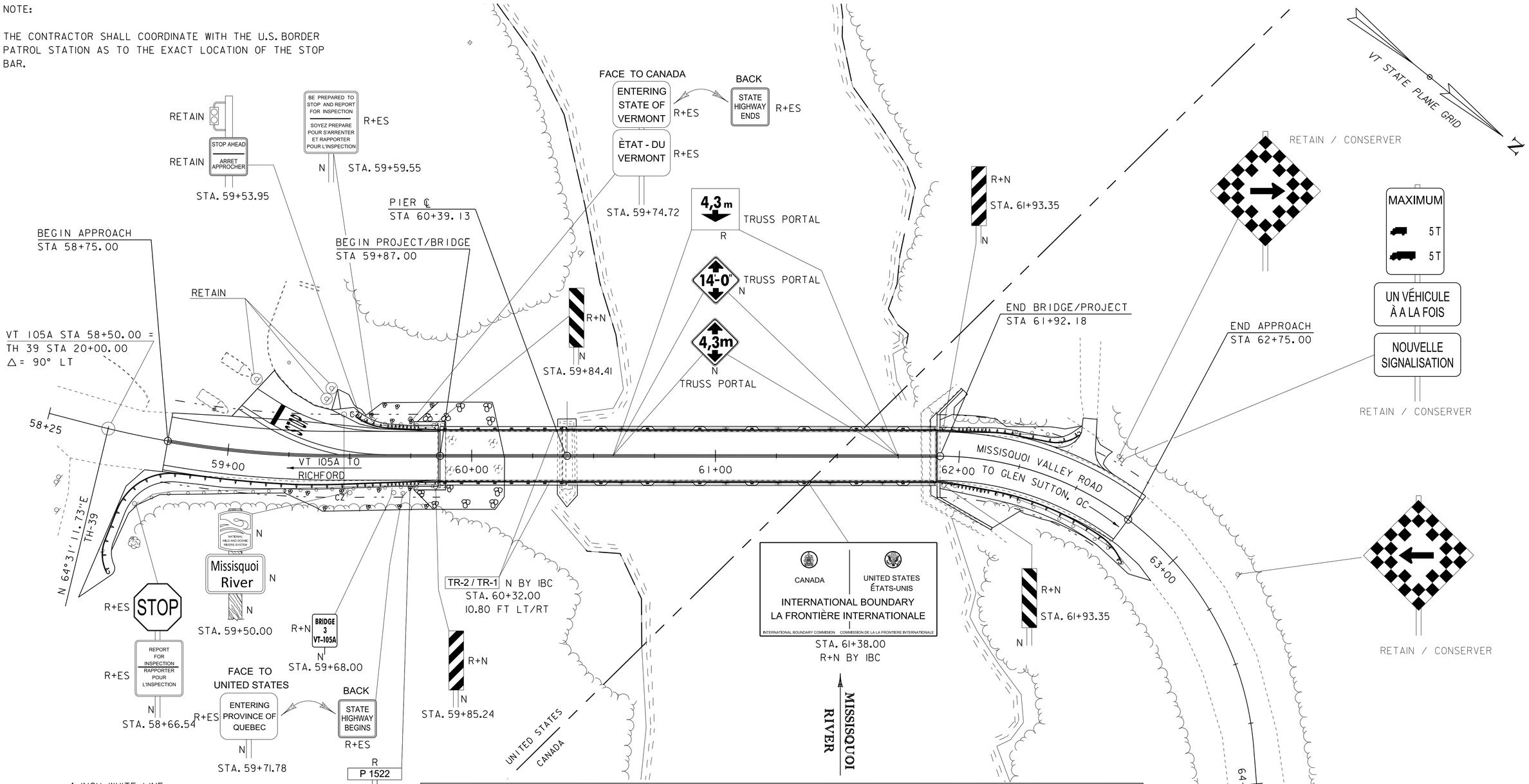

4 INCH WHITE LINE
STA 58+75.00 RT - STA 59+87.00 RT
STA 59+16.00 33.57' LT - STA 59+67.00 10.0' LT
STA 59+67.00 LT - STA 59+87.00 LT

4 INCH YELLOW LINE
STA 58+75.00 - STA 61+91.92 ℄ (DOUBLE)
STA 59+00.00 14.0' LT - STA 59+44.00 ℄ (DOUBLE)

4 INCH YELLOW LINE
STA 61+91.92 - STA 62+75.00 ℄ (SINGLE)

24 INCH STOP BAR
STA 59+17.59 LT - STA 59+21.67 LT

LETTER OR SYMBOL
STA. 59+26.00 LT "STOP" LETTERING

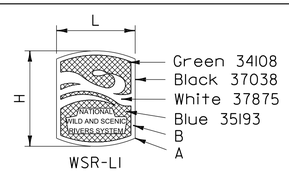

WSR-LI

L	H	BLACK BORDER A	WHITE INSET B	TEXT (UPPER CASE)
10¼"	12"	⅛"	½"	⅜B

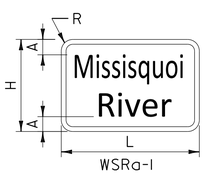

WSRa-I

L	H	A	BORDER	R	TEXT (TITLE CASE)
18"	12"	2"	⅝"	1½"	3C

NOTES:
TEXT ASA SERIES
COLORS WSR-LI FULLY RETROREFLECTIVE COLORS (FEDERAL STANDARD 595B). WSRa FULLY RETROREFLECTIVE WHITE TEXT AND BORDER ON BROWN BACKGROUND.

SEE PROJECT SPECIAL PROVISIONS AND THE USDA "SIGN AND POSTER GUIDELINES FOR THE FOREST SERVICE" FOR ADDITIONAL SIGN, POST, AND PLACEMENT INFORMATION.

SCALE 1" = 20'-0"
20 0 20

LEGEND
R: REMOVE
R&S: REMOVE AND SALVAGE
ES: ERECT SALVAGED
RET: RETAIN
N: NEW
S: SALVAGE

PROJECT NAME: RICHFORD-SUTTON, PQ
PROJECT NUMBER: BHF 0814(1)

FILE NAME: s10c222sign.dgn
PROJECT LEADER: C. CARLSON
DESIGNED BY: C. BURRALL
TRAFFIC SIGNS AND PAVEMENT MARKINGS

PLOT DATE: 24-OCT-2017
DRAWN BY: G. ROKES
CHECKED BY: C. BURRALL
SHEET 18 OF 87

STATE OF VERMONT
AGENCY OF TRANSPORTATION

TRAFFIC SIGN SUMMARY SHEET 1

MILE MARKER, STATION OR SIGN NUMBER	SIGN LEGEND	SIGN DIMENSIONS EACH	SIGN DIMENSIONS WIDTH (in)	SIGN DIMENSIONS HEIGHT (in)	NEW & SALVAGED SIGNS "A"	NEW & SALVAGED SIGNS "B"	NEW & SALVAGED SIGNS SALV SIGN	NEW & SALVAGED SIGNS SALV TIS	EXIST POST RETAIN	EXIST POST SALVAGE	NEW SIGN POSTS NO. OF POST	FLANGED CHANNEL (LB / FT) 1.12	FLANGED CHANNEL (LB / FT) 2.00	FLANGED CHANNEL (LB / FT) 3.00	SQUARE STEEL (in) (LB / FT) 1.75 1.88	SQUARE STEEL (in) (LB / FT) 2.00 2.42	SQUARE STEEL (in) (LB / FT) 2.50 3.35	ANCHOR	SLEEVE	TUBULAR ALUMINUM Ø (IN) (LB / FT) 3.00 1.30	TUBULAR ALUMINUM Ø (IN) (LB / FT) 4.00 1.70	TUBULAR ALUMINUM Ø (IN) (LB / FT) 4.0 MOD 1.70	TUBULAR STEEL Ø (IN) FOUNDATION	TUBULAR STEEL Ø (IN) (LB / FT) 3.00 7.60	TUBULAR STEEL Ø (IN) (LB / FT) 3.50 9.00	TUBULAR STEEL Ø (IN) (LB / FT) 4.00 10.80	TUBULAR STEEL Ø (IN) (LB / FT) 5.00 14.60	W-SHAPE STEEL FTG. SIZE 24"	W-SHAPE STEEL FTG. SIZE 30"	W-SHAPE STEEL WEIGHT	W-SHAPE STEEL POST SIZE	W-SHAPE STEEL SIGN FRAME REQUIRED	REMARKS	SIGN DETAIL DETAIL ON SHEET NUMBER	SIGN DETAIL STANDARD SHEET NUMBER
OPTION ITEMS																																			
	VT-105A																																		
58+66.54 RT	STOP						1.0				1.0					12.0		X																	
	REPORT FOR INSPECTION / RAPPORTER POUR L'INSPECTION						1.0																												
59+50.00 RT	NATIONAL WILD AND SCENIC RIVERS SYSTEM	1									1.0																						WSR-L1 ON WOOD POST, SEE NPS GUIDELINES EM-7100-15, 2013. PAID FOR UNDER BID ITEM 900.640 "SPECIAL PROVISION (NATIONAL WILD AND SCENIC RIVERS SIGN)"		NPS
	Missisquoi River	1																															WSRa-1 ON WOOD POST, SEE NPS GUIDELINES EM-7100-15, 2013. PAID FOR UNDER BID ITEM 900.640 "SPECIAL PROVISION (NATIONAL WILD AND SCENIC RIVERS SIGN)"		NPS
59+59.55LT	BE PREPARED TO STOP AND REPORT FOR INSPECTION / SOYEZ PREPARE POUR D'ARRENTER ET RAPPORTER POUR L'INSPECTION						1.0				1.0					12.0		X																	
59+68.00 RT	BRIDGE 3 VT-105A	1	8.0	10.0	0.4						1.0					12.0		X															D3-1		SHSM
59+71.78RT	ENTERING PROVINCE OF QUEBEC						1.0				1.0					12.0		X																	
	STATE HIGHWAY BEGINS						1.0																												
59+74.72	ENTERING STATE OF VERMONT						1.0				1.0					12.0		X																	
	ÈTAT - DU VERMONT						1.0																												
	STATE HIGHWAY ENDS						1.0																												
												FT .	FT .	FT .	FT .	FT 60.	FT .	XXXXX XXXXX XXXXX XXXXX XXXXX	EA .	LB .	LB .	LB .		LB .	LB .	LB .	LB .							
	TOTALS				SF .42	SF .	EA. 8.	SF .	XXXXXXXXXXX XXXXXXXXXXX XXXXXXXXXXX			FT .			FT 60.					LB .			EA.	LB .				EA. .	EA. .	LB .				

FINAL POST LENGTHS ARE TO BE DETERMINED IN THE FIELD. POST SIZES ARE COMPUTED BASED ON INFORMATION FURNISHED ON THE STANDARD SHEETS AND THE VTRANS "SIGN POST DESIGN GUIDELINE."

PROJECT NAME: RICHFORD SUTTON,PQ
PROJECT NUMBER: BHF 0814(1)

FILE NAME: sl0c222tss.dgn
PROJECT MANAGER: C. CARLSON
DESIGNED BY: C. BURRALL
TRAFFIC SIGN SUMMARY SHEET #1

PLOT DATE: 26-SEP-2017
DRAWN BY: G. ROKES
CHECKED BY: C. BURRALL
SHEET 19 OF 87

STATE OF VERMONT
AGENCY OF TRANSPORTATION

TRAFFIC SIGN SUMMARY SHEET 2

MILE MARKER, STATION OR SIGN NUMBER	SIGN LEGEND	SIGN DIMENSIONS EACH	SIGN DIMENSIONS WIDTH (in)	SIGN DIMENSIONS HEIGHT (in)	NEW & SALVAGED SIGNS "A"	NEW & SALVAGED SIGNS "B"	NEW & SALVAGED SIGNS SALV SIGN	NEW & SALVAGED SIGNS SALV TIS	EXIST POST RETAIN	EXIST POST SALVAGE	NEW SIGN POSTS NO. OF POST	FLANGED CHANNEL (LB / FT) 1.12	FLANGED CHANNEL (LB / FT) 2.00	FLANGED CHANNEL (LB / FT) 3.00	SQUARE STEEL (in) (LB / FT) 1.75	SQUARE STEEL (in) (LB / FT) 2.00	SQUARE STEEL (in) (LB / FT) 2.50	ANCHOR	SLEEVE	TUBULAR ALUMINUM Ø (IN) (LB / FT) 3.00	TUBULAR ALUMINUM Ø (IN) (LB / FT) 4.00	TUBULAR ALUMINUM Ø (IN) (LB / FT) 4.0 MOD	FOUNDATION	TUBULAR STEEL Ø (IN) (LB / FT) 3.00	TUBULAR STEEL Ø (IN) (LB / FT) 3.50	TUBULAR STEEL Ø (IN) (LB / FT) 4.00	TUBULAR STEEL Ø (IN) (LB / FT) 5.00	W-SHAPE STEEL FTG. SIZE 24"	W-SHAPE STEEL FTG. SIZE 30"	WEIGHT	POST SIZE	SIGN FRAME REQUIRED	REMARKS	SIGN DETAIL DETAIL ON SHEET NUMBER	SIGN DETAIL STANDARD SHEET NUMBER
OPTION ITEMS																																			
59+74.75RT	P 1522																																TO BE REPLACED BY INTERNATIONAL BOUNDARY COMMISSION (IBC)		
59+84.41 LT		1	12.0	36.0	3.0						1.0					12.0		X															0M-3L		SHSM
59+85.24 RT		1	12.0	36.0	3.0						1.0					12.0		X															0M-3R		SHSM
60+32.00 RT	TR-2 / TR-1																																TO BE REPLACED BY INTERNATIONAL BOUNDARY COMMISSION (IBC)		
60+32.00 LT	TR-2 / TR-1																																TO BE REPLACED BY INTERNATIONAL BOUNDARY COMMISSION (IBC)		
BEGIN PORTAL	14'-0"	1	36.0	36.0	9.0																												W12-2 (14'-0") ENGLISH		SHSM
	4,3m	1	36.0	36.0	9.0																												W12-2 (4.3M) METRIC		SHSM
61+38.00	CANADA / UNITED STATES ÉTATS-UNIS INTERNATIONAL BOUNDARY LA FRONTIÈRE INTERNATIONALE																																INTERNATIONAL BOUNDARY COMMISION SIGN. TO BE REPLACED BY IBC		
END PORTAL	14'-0"	1	36.0	36.0	9.0																												W12-2 (14'-0") ENGLISH		SHSM
	4,3m	1	36.0	36.0	9.0																												W12-2 (4.3M) METRIC		SHSM
												FT .	FT .	FT .	FT .	FT 24.	FT .	XXXXX XXXXX XXXXX XXXXX	EA .	LB .	LB .	LB .		LB .	LB .	LB .	LB .								
TOTALS					SF 42.	SF .	EA. .	SF .	XXXXXXXXXXX XXXXXXXXXXX XXXXXXXXXXX			FT .			FT 24.					LB .			EA.	LB .				EA. .	EA. .	LB .					

FINAL POST LENGTHS ARE TO BE DETERMINED IN THE FIELD. POST SIZES ARE COMPUTED BASED ON INFORMATION FURNISHED ON THE STANDARD SHEETS AND THE VTRANS "SIGN POST DESIGN GUIDELINE."

PROJECT NAME: RICHFORD SUTTON,PQ
PROJECT NUMBER: BHF 0814(1)

FILE NAME: s10c222tss.dgn
PROJECT MANAGER: C. CARLSON
DESIGNED BY: C. BURRALL
TRAFFIC SIGN SUMMARY SHEET#2

PLOT DATE:26-SEP-2017
DRAWN BY: C. ROKES
CHECKED C. BURRALL
SHEET 20 OF 87

STATE OF VERMONT
AGENCY OF TRANSPORTATION

TRAFFIC SIGN SUMMARY SHEET 3

MILE MARKER, STATION OR SIGN NUMBER	SIGN LEGEND	SIGN DIMENSIONS			NEW & SALVAGED SIGNS				EXIST POST		NEW SIGN POSTS																					SIGN DETAIL	
											NO. OF	FLANGED CHANNEL			SQUARE STEEL (in)					TUBULAR ALUMINUM Ø (IN)			TUBULAR STEEL Ø (IN)				W-SHAPE STEEL						
		EACH	WIDTH (in)	HEIGHT (in)	"A"	"B"	SALV SIGN	SALV TIS	RETAIN	SALVAGE	POST	(LB / FT) 1.12	2.00	3.00	(LB / FT) 1.75 1.88	2.00 2.42	2.50 3.35	ANCHOR	SLEEVE	3.00 (LB / FT) 1.30	4.00 1.70	4.0 MOD 1.70	FOUNDATION	3.00 (LB / FT) 7.60	3.50 9.00	4.00 10.80	5.00 14.60	FTG. SIZE 24"	30"	WEIGHT	POST SIZE	SIGN FRAME REQUIRED	REMARKS	DETAIL ON SHEET NUMBER	STANDARD SHEET NUMBER
OPTION ITEMS																																			
61+93.35 RT/LT		1	12.0	36.0	3.0						1.0					12.0		X														0M-3R		SHSM
		1	12.0	36.0	3.0						1.0					12.0		X														0M-3L		SHSM

SOIL CLASSIFICATION

AASHTO

A1	Gravel and Sand
A3	Fine Sand
A2	Silty or Clayey Gravel and Sand
A4	Silty Soil - Low Compressibility
A5	Silty Soil - Highly Compressible
A6	Clayey Soil - Low Compressibility
A7	Clayey Soil - Highly Compressible

ROCK QUALITY DESIGNATION

R.Q.D. (%)	ROCK DESCRIPTION
<25	Very Poor
25 to 50	Poor
51 to 75	Fair
76 to 90	Good
>90	Excellent

SHEAR STRENGTH

UNDRAINED SHEAR STRENGTH IN P.S.F.	CONSISTENCY
<250	Very Soft
250-500	Soft
500-1000	Med. Stiff
1000-2000	Stiff
2000-4000	Very Stiff
>4000	Hard

CORRELATION GUIDE OF "N" TO DENSITY/CONSISTENCY

DENSITY (GRANULAR SOILS) N	DENSITY (GRANULAR SOILS) DESCRIPTIVE TERM	CONSISTENCY (COHESIVE SOILS) N	CONSISTENCY (COHESIVE SOILS) DESCRIPTIVE TERM
<5	Very Loose	<2	Very Soft
5-10	Loose	2-4	Soft
11-24	Med. Dense	5-8	Med. Stiff
25-50	Dense	9-15	Stiff
>50	Very Dense	16-30	Very Stiff
		31-60	Hard
		>60	Very Hard

COMMONLY USED SYMBOLS

▼	Water Elevation
⊗	Standard Penetration Boring
⊕	Auger Boring
⊙	Rod Sounding
S	Sample
N	Standard Penetration Test Blow Count Per Foot For: 2" O.D. Sampler 1 3/8" I.D. Sampler Hammer Weight Of 140 Lbs. Hammer Fall Of 30"
VS	Field Vane Shear Test
US	Undisturbed Soil Sample
B	Blast
DC	Diamond Core
MD	Mud Drill
WA	Wash Ahead
HSA	Hollow Stem Auger
AX	Core Size 1 1/8"
BX	Core Size 1 5/8"
NX	Core Size 2 1/8"
M	Double Tube Core Barrel Used
LL	Liquid Limit
PL	Plastic Limit
PI	Plasticity Index
NP	Non Plastic
w	Moisture Content (Dry Wgt. Basis)
D	Dry
M	Moist
MTW	Moist To Wet
W	Wet
Sat	Saturated
Bo	Boulder
Gr	Gravel
Sa	Sand
Si	Silt
Cl	Clay
HP	Hardpan
Le	Ledge
NLTD	No Ledge To Depth
CNPF	Can Not Penetrate Further
TLOB	Top of Ledge Or Boulder
NR	No Recovery
Rec.	Recovery
%Rec.	Percent Recovery
RQD	Rock Quality Designation
CBR	California Bearing Ratio
<	Less Than
>	Greater Than
R	Refusal (N > 100)
VTSPG	NAD83 - See Note 7

COLOR

blk	Black	pnk	Pink
bl	Blue	pu	Purple
brn	Brown	rd	Red
dk	Dark	tn	Tan
gry	Gray	wh	White
gn	Green	yel	Yellow
lt	Light	mltc	Multicolored
or	Orange		

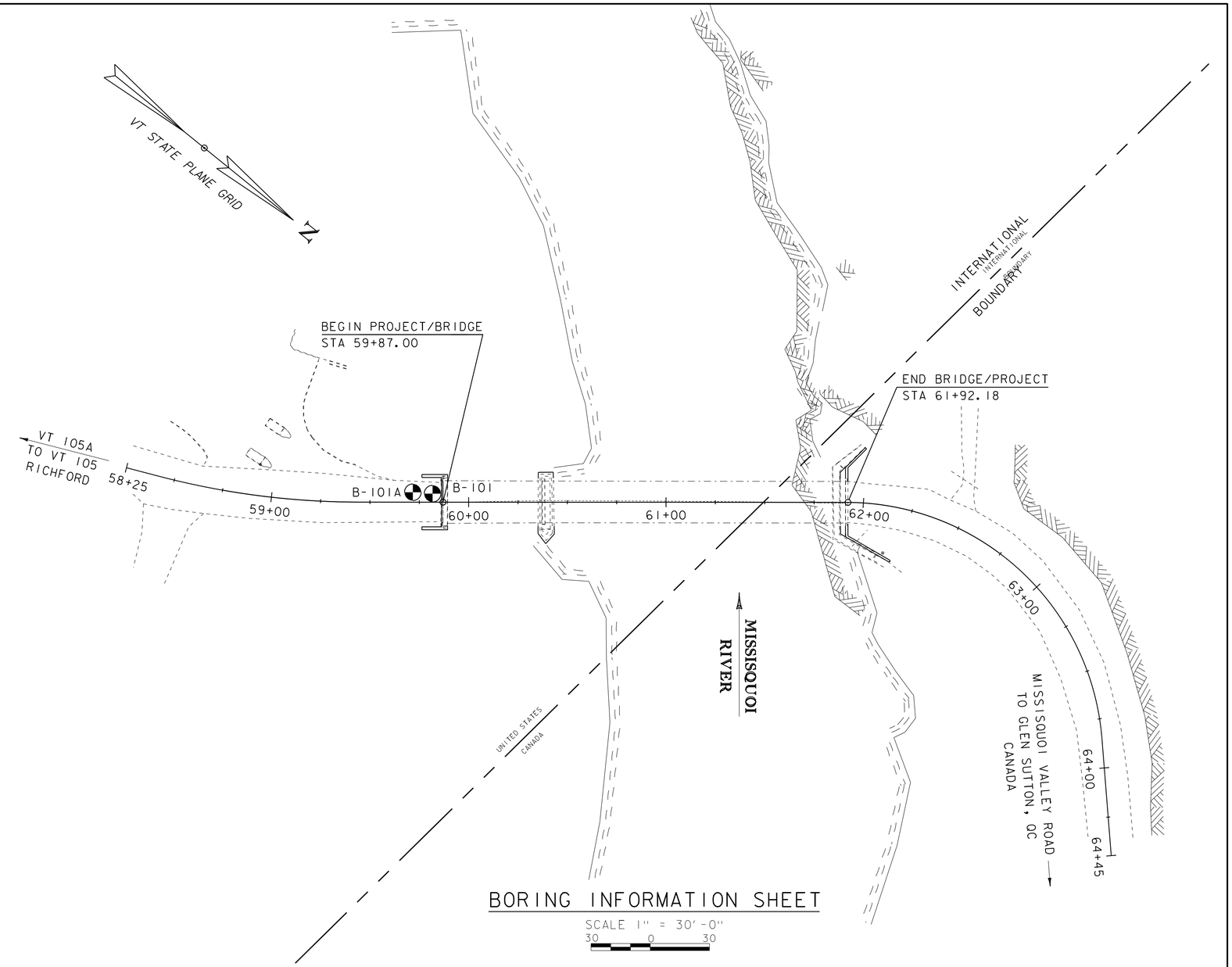

BORING INFORMATION SHEET

SCALE 1" = 30'-0"
30 0 30

DEFINITIONS (AASHTO)

BEDROCK (LEDGE) - Rock in its native location of indefinite thickness.

BOULDER - A rock fragment with an average dimension > 12 inches.

COBBLE - Rock fragments with an average dimension between 3 and 12 inches.

GRAVEL - Rounded particles of rock < 3" and > 0.0787" (#10 sieve).

SAND - Particles of rock < 0.0787" (#10 sieve) and > 0.0029" (#200 sieve).

SILT - Soil < 0.0029" (#200 sieve), non or slightly plastic and exhibits no strength when air-dried.

CLAY - Fine grained soil, exhibits plasticity when moist and considerable strength when air-dried.

VARVED - Alternate layers of silt and clay.

HARDPAN - Extremely dense soil, cemented layer, not softened when wet.

MUCK - Soft organic soil (containing > 10% organic material.

MOISTURE CONTENT - Weight of water divided by dry weight of soil.

FLOWING SAND - Granular soil so saturated (loose) that it flows into drill casing during extraction of wash rod.

STRIKE - Angle from magnetic north to line of intersection of bed with a horizontal plane.

DIP - Inclination of bed with a horizontal plane.

GENERAL NOTES

1. The subsurface explorations shown herein were made between 6/6/16 and 6/9/16 by the Agency.
2. Soil and rock classifications, properties and descriptions are based on engineering interpretation from available subsurface information by the Agency and may not necessarily reflect actual variations in subsurface conditions that may be encountered between individual boring or sample locations.
3. Observed water levels and/or conditions indicated are as recorded at the time of exploration and may vary according to the prevailing rainfall, methods of exploration and other factors.
4. Engineering judgment was exercised in preparing the subsurface information presented herein. Analysis and interpretation of subsurface data was performed and interpreted for Agency design and estimating purposes. Presentation of the information in the Contract is intended to provide the Contractor access to the same data available to the Agency. The subsurface information is presented in good faith and is not intended as a substitute for personal investigation, independent interpretation, independent analysis or judgment by the Contractor.
5. Pictorial structure details shown on the boring plan layout or soils profile are for illustrative purposes only and may not accurately portray final contract details.
6. Terminology used on boring logs to describe the hardness, degree of weathering, and spacing of fractures, joints and other discontinuities in the bedrock is defined in the AASHTO Manual on Subsurface Investigations, 1988.
7. Northing and Easting coordinates are shown in Vermont State Plane Grid North American Datum 1983 in meters and survey feet.

BORING CHART

HOLE NO.	SURV. STATION	OFFSET	GROUND ELEV.	ELEV. TLOB
B-101	59+76.60	-7.35	514.6	N/A
B-101A	59+66.60	-7.34	514.3	444.2

PROJECT NAME: RICHFORD-SUTTON, PQ
PROJECT NUMBER: BHF 0814(1)

FILE NAME: s10c222bor.dgn
PROJECT LEADER: C. CARLSON
DESIGNED BY: C. BURRALL
BORING INFORMATION SHEET

PLOT DATE: 26-SEP-2017
DRAWN BY: G. ROKES
CHECKED BY: C. BURRALL
SHEET 22 OF 87

STATE OF VERMONT
AGENCY OF TRANSPORTATION
CONSTRUCTION AND
MATERIALS BUREAU
CENTRAL LABORATORY

BORING LOG

Richford-Sutton
BHF 0814(1)
VT-105A Bridge #3

Boring No.: **B-101**
Page No.: 1 of 1
Pin No.: 10c222
Checked By: END

Boring Crew: Garrow, Judkins, Nieto
Date Started: 6/06/16 Date Finished: 6/07/16
VTSPG NAD83: N 915475.54 ft E 1617697.85 ft
Station: 59+76.6 Offset: -7.35
Ground Elevation: 514.6 ft

	Casing	Sampler
Type:	WB	SS
I.D.:	4 in	1.5 in
Hammer Wt:	N.A.	140 lb.
Hammer Fall:	N.A.	30 in.
Hammer/Rod Type:	Auto/AWJ	
Rig:	CME 45C SKID	CE = 1.42

Groundwater Observations

Date	Depth (ft)	Notes
06/06/16	21.6	W.T. after drilling
06/07/16	21.5	W.T. before drilling

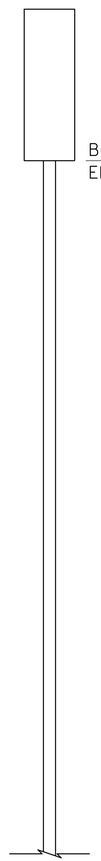

Depth (ft)	Strata (1)	CLASSIFICATION OF MATERIALS (Description)	Blows/6" (N Value)	Moisture Content %	Gravel %	Sand %	Fines %
		Asphalt Pavement, 0.0 ft - 0.85 ft					
		A-1-a, SaGr, Dk/brn, Moist, Rec. = 1.3 ft, Lab Note: Pieces of asphalt pavement were within sample	10-8-5-5 (13)	7.4	52.1	41.0	6.9
		A-1-b, GrSa, Dk/brn, Moist, Rec. = 0.7 ft	4-5-4-6 (9)	6.5	33.0	57.9	9.1
5		A-1-a, SaGr, gry, Moist, Rec. = 1.0 ft, Lab Note: Broken concrete was within sample	5-5-4-3 (9)	6.7	54.3	33.2	12.5
		A-1-a, SaGr, gry-brn, Moist, Rec. = 1.2 ft, Lab Note: Broken rock was within sample Field Note:, Cleaned out casing	5-24-9-9 (33)	3.0	65.2	28.0	6.8
10		A-1-b, GrSa, gry, MTW, Rec. = 0.3 ft, Lab Note: Broken rock was within sample Field Note:, Rollercone, Cleaned out casing	9-5-4-5 (9)	20.5	27.7	68.8	3.5
		A-1-a, SaGr, brn-gry, Moist, Rec. = 0.5 ft, Lab Note: Broken rock and pieces of broken concrete were within sample Field Note:, NXDC, Cleaned out casing, cobbles, stones and concrete	3-1-4-24 (5)	12.7	50.2	41.3	8.5
		A-1-a, Gr, gry, Moist, Rec. = 0.7 ft, Lab Note: A lot of pieces of broken concrete were within sample Field Note:, Cleaned out casing	17-9-6-7 (15)	12.8	87.2	10.9	1.9
15		A-1-a, SaGr, brn, Moist, Rec. = 0.5 ft, Lab Note: Pieces of broken concrete were within sample Field Note:, NXDC, Cleaned out casing, cobbles, stones and concrete	4-2-5-2 (7)	13.7	65.9	25.6	8.5
		A-1-a, Gr, gry, Moist, Rec. = 0.6 ft, Lab Note: A lot of broken rock and pieces of concrete were within sample Field Note:, NXDC, Cleaned out casing, cobbles and concrete	4-5-12-11 (17)	7.2	87.5	11.4	1.1
20		A-1-a, SaGr, gry, Moist, Rec. = 0.5 ft Field Note:, Cleaned out casing	11-14-6-4 (20)	12.3	76.4	22.3	1.3
25		24.4 ft - 25.0 ft Field Note:, No Recovery Field Note:, NXDC, Cleaned out casing	4-7-18-9 (25)				
30		Field Note:, Cored concrete from 27.3 feet to 42.3 feet					
35							
40							
		Hole stopped @ 42.3 ft					
45		Remarks: Hole Collapsed at 18.5 feet.					

Notes:
1. Stratification lines represent approximate boundary between material types. Transition may be gradual.
<<SUB>><<SUB>> is the hammer energy correction factor.
3. Water level readings have been made at times and under conditions stated. Fluctuations may occur due to other factors than those present at the time measurements were made.

BORING LOG 2 RICHFORD-SUTTON BHF0814(1).GPJ VERMONT AOT.GDT 8/1/17

PROJECT NAME: RICHFORD-SUTTON, PQ
PROJECT NUMBER: BHF 0814(1)

FILE NAME: s10c222bor.dgn
PROJECT LEADER: C. CARLSON
DESIGNED BY: C. BURRALL
BORING LOGS 1

PLOT DATE: 26-SEP-2017
DRAWN BY: G. ROKES
CHECKED BY: C. BURRALL
SHEET 23 OF 87

STATE OF VERMONT
AGENCY OF TRANSPORTATION
CONSTRUCTION AND
MATERIALS BUREAU
CENTRAL LABORATORY

BORING LOG

Richford-Sutton
BHF 0814(1)
VT-105A Bridge #3

Boring No.: **B-101A**
Page No.: 1 of 2
Pin No.: 10c222
Checked By: END

Boring Crew: Nieto, Judkins, Coletti
Date Started: 6/07/16 Date Finished: 6/09/16
VTSPG NAD83: N 915467.77 ft E 1617704.14 ft
Station: 59+66.6 Offset: -7.34
Ground Elevation: 514.3 ft

	Casing	Sampler
Type:	WB	SS
I.D.:	4 in	1.5 in
Hammer Wt:	N.A.	140 lb.
Hammer Fall:	N.A.	30 in.
Hammer/Rod Type:	Auto/AWJ	
Rig:	CME 45C SKID	CE = 1.42

Groundwater Observations		
Date	Depth (ft)	Notes
06/09/16	19.5	W.T. before drilling

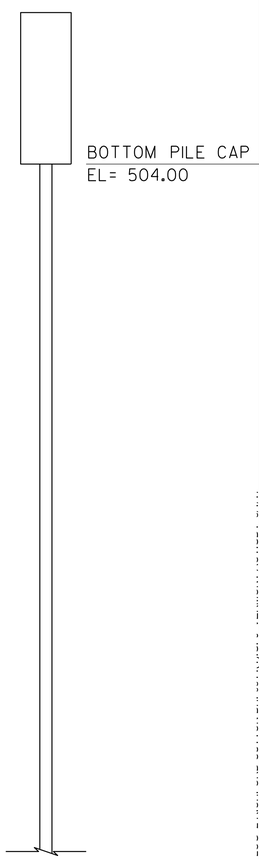

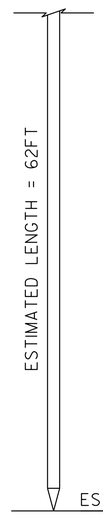

Depth (ft)	Strata (1)	CLASSIFICATION OF MATERIALS (Description)	Run (Dip deg.)	Core Rec. % (RQD %)	Drill Rate minutes/ft	Blows/6" (N Value)	Moisture Content %	Gravel %	Sand %	Fines %
		Asphalt Pavement, 0.0 ft - 0.3 ft								
5										
10										
15		Field Note:, Cobbles								
20		Field Note:, Cobbles and boulder								
25		A-1-a, SaGr, gry-brn, Moist, Rec. = 1.2 ft, Lab Note: A lot of broken rock was within sample				13-27-20-27 (47)	10.0	60.1	29.5	10.4
30		Field Note:, Cleaned out casing A-1-a, SaGr, gry-brn, Moist, Rec. = 0.8 ft, Lab Note: Broken rock was within sample				13-23-16-24 (39)	10.9	54.4	34.2	11.4
35		Field Note:, Cleaned out casing A-1-a, Gr, gry, Moist, Rec. = 0.3 ft, Lab Note: A lot of broken rock was within sample				40-R@3.5" (R)	5.1	81.0	14.3	4.7
40		A-1-a, SaGr, gry, Moist, Rec. = 0.8 ft, Lab Note: A lot of broken rock was within sample				14-16-22-16 (38)	9.5	68.0	22.6	9.4
		Field Note:, BXDC, Cleaned out casing								

Notes:
1. Stratification lines represent approximate boundary between material types. Transition may be gradual.
<<SUB>><<SUB>> is the hammer energy correction factor.
3. Water level readings have been made at times and under conditions stated. Fluctuations may occur due to other factors than those present at the time measurements were made.

STATE OF VERMONT
AGENCY OF TRANSPORTATION
CONSTRUCTION AND
MATERIALS BUREAU
CENTRAL LABORATORY

BORING LOG

Richford-Sutton
BHF 0814(1)
VT-105A Bridge #3

Boring No.: **B-101A**
Page No.: 2 of 2
Pin No.: 10c222
Checked By: END

Boring Crew: Nieto, Judkins, Coletti
Date Started: 6/07/16 Date Finished: 6/09/16
VTSPG NAD83: N 915467.77 ft E 1617704.14 ft
Station: 59+66.6 Offset: -7.34
Ground Elevation: 514.3 ft

	Casing	Sampler
Type:	WB	SS
I.D.:	4 in	1.5 in
Hammer Wt:	N.A.	140 lb.
Hammer Fall:	N.A.	30 in.
Hammer/Rod Type:	Auto/AWJ	
Rig:	CME 45C SKID	CE = 1.42

Groundwater Observations		
Date	Depth (ft)	Notes
06/09/16	19.5	W.T. before drilling

Depth (ft)	Strata (1)	CLASSIFICATION OF MATERIALS (Description)	Run (Dip deg.)	Core Rec. % (RQD %)	Drill Rate minutes/ft	Blows/6" (N Value)	Moisture Content %	Gravel %	Sand %	Fines %
		Field Note:, No Recovery				8-8-8-6 (16)				
50		Field Note:, BXDC, Cleaned out casing A-2-4, Sa, Dk/brn, Moist, Rec. = 0.9 ft				6-5-7-8 (12)	26.2	0.3	80.5	19.2
55		A-4, Si, gry, Moist, Rec. = 1.2 ft				2-4-5-4 (9)	28.9		9.1	90.9
60		Field Note:, BXDC, Cleaned out casing Field Note:, No Recovery				6-4-5-4 (9)				
65		Field Note:, BXDC, Cleaned out casing Field Note:, No Recovery				5-2-3-2 (5)				
70		Field Note:, No Recovery 70.1 ft - 75.1 ft, Gray, Graphitic biotite-muscovite-quartz-albite-pyrite Schist, Faint brown and rust staining along joints and pyrite inclusions. Hard, Unweathered, Fair rock, BX, RMR=49	1 (75)	90 (30)	7 4 4 4 4	R@70.1" (R)				
75		75.1 ft - 80.1 ft, Gray, Graphitic biotite-muscovite-quartz-albite-pyrite Schist, Hard, Unweathered, Poor rock, BX, RMR=31, Low recovery due to mechanical difficulties during drilling	2 (75)	10 (0)	5 3 3 5 4					
80		80.1 ft - 85.1 ft, Gray, Graphitic biotite-muscovite-quartz-albite-pyrite gneissic Schist, Rust and brown staining along joints. Hard, Very slightly weathered, Fair rock, BX, RMR=43	3 (75-80)	84 (12)	6 5 5 5 5					
85		Hole stopped @ 85.1 ft								

Remarks:
Hole collapsed at 20.0 feet.

Notes:
1. Stratification lines represent approximate boundary between material types. Transition may be gradual.
<<SUB>><<SUB>> is the hammer energy correction factor.
3. Water level readings have been made at times and under conditions stated. Fluctuations may occur due to other factors than those present at the time measurements were made.

PROJECT NAME: RICHFORD-SUTTON, PQ
PROJECT NUMBER: BHF 0814(1)

FILE NAME: s10c222bor.dgn
PROJECT LEADER: C. CARLSON
DESIGNED BY: C. BURRALL
BORING LOGS 2
PLOT DATE: 26-SEP-2017
DRAWN BY: G. ROKES
CHECKED BY: C. BURRALL
SHEET 24 OF 87

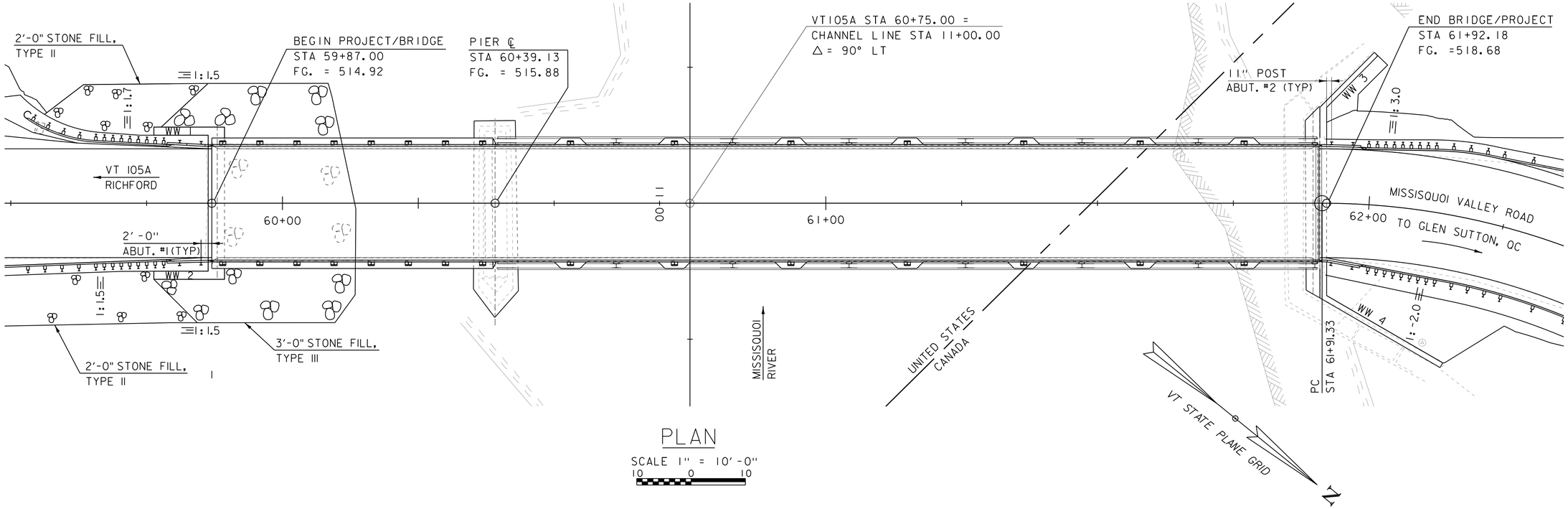

PLAN

SCALE 1" = 10'-0"
10 0 10

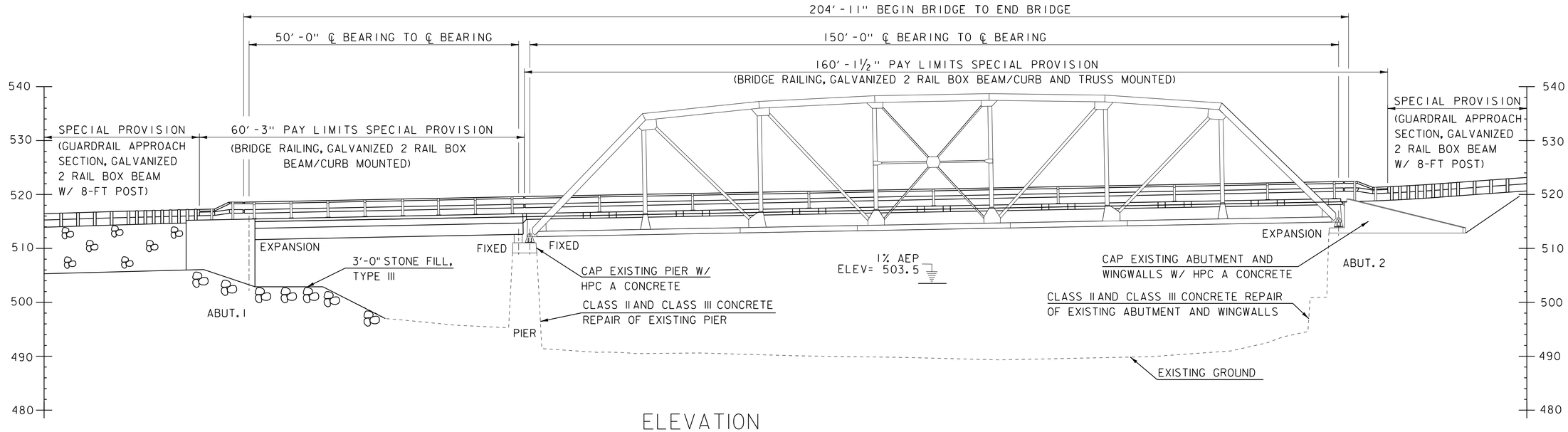

ELEVATION

SCALE 1" = 10'-0"
10 0 10

PROJECT NAME: RICHFORD-SUTTON, PQ	
PROJECT NUMBER: BHF 0814(1)	
FILE NAME: s10c222pe.dgn	PLOT DATE: 26-SEP-2017
PROJECT LEADER: C. CARLSON	DRAWN BY: G. ROKES
DESIGNED BY: C. BURRALL	CHECKED BY: C. BURRALL
PLAN AND ELEVATION	SHEET 25 OF 87

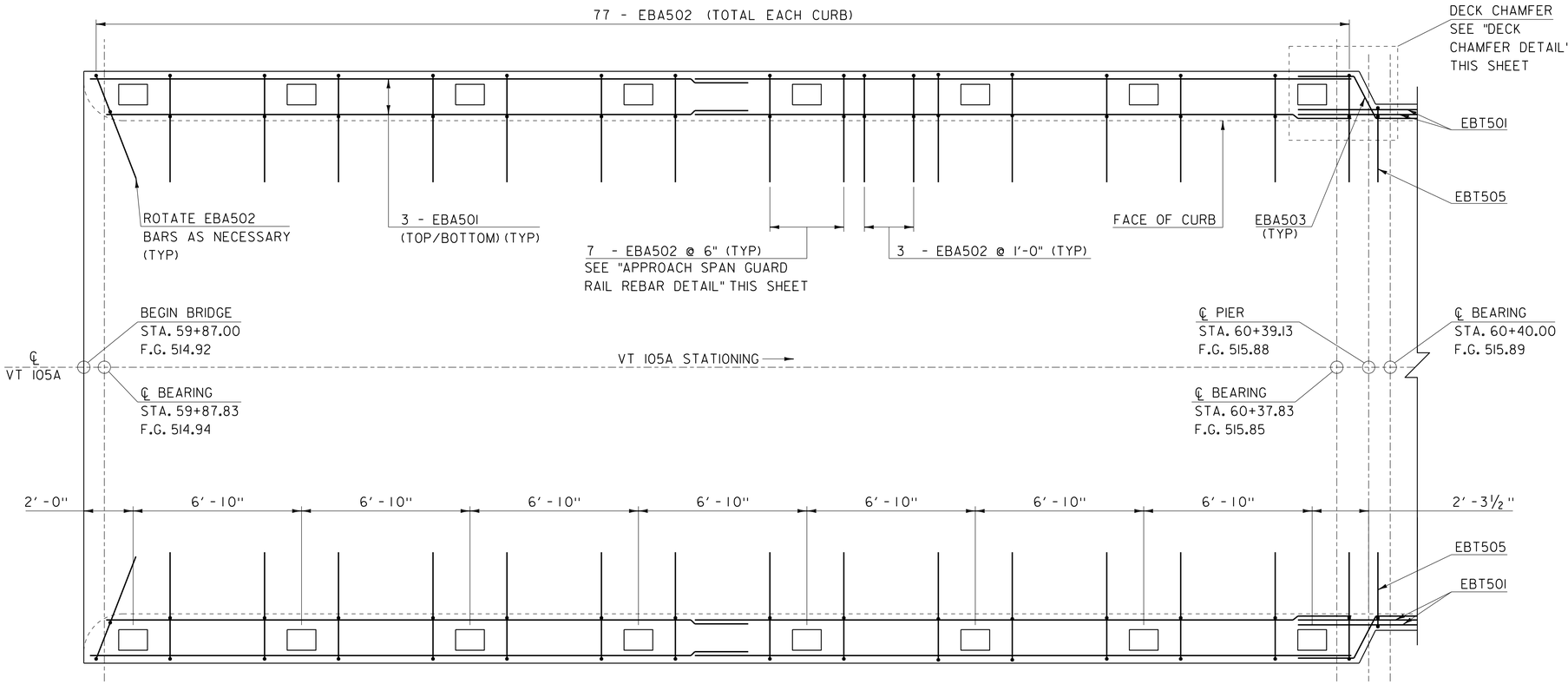

APPROACH SPAN GEOMETRY & REINFORCING PLAN

SCALE ⅜" = 1'-0"

NOTE: BRIDGE IS SYMMETRICAL ABOUT THE CENTERLINE

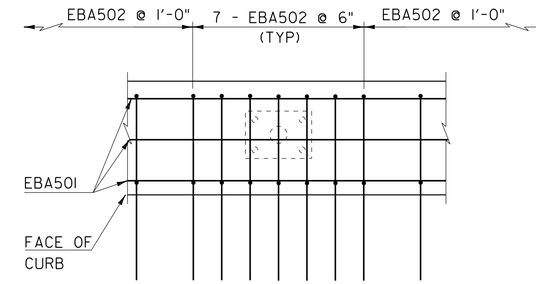

APPROACH SPAN GUARDRAIL REBAR DETAIL

SCALE ¾" = 1'-0"

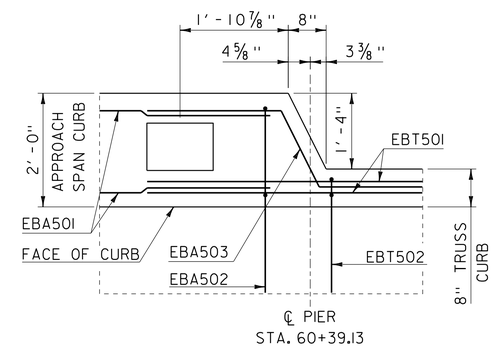

DECK CHAMFER DETAIL

SCALE ¾" = 1'-0"

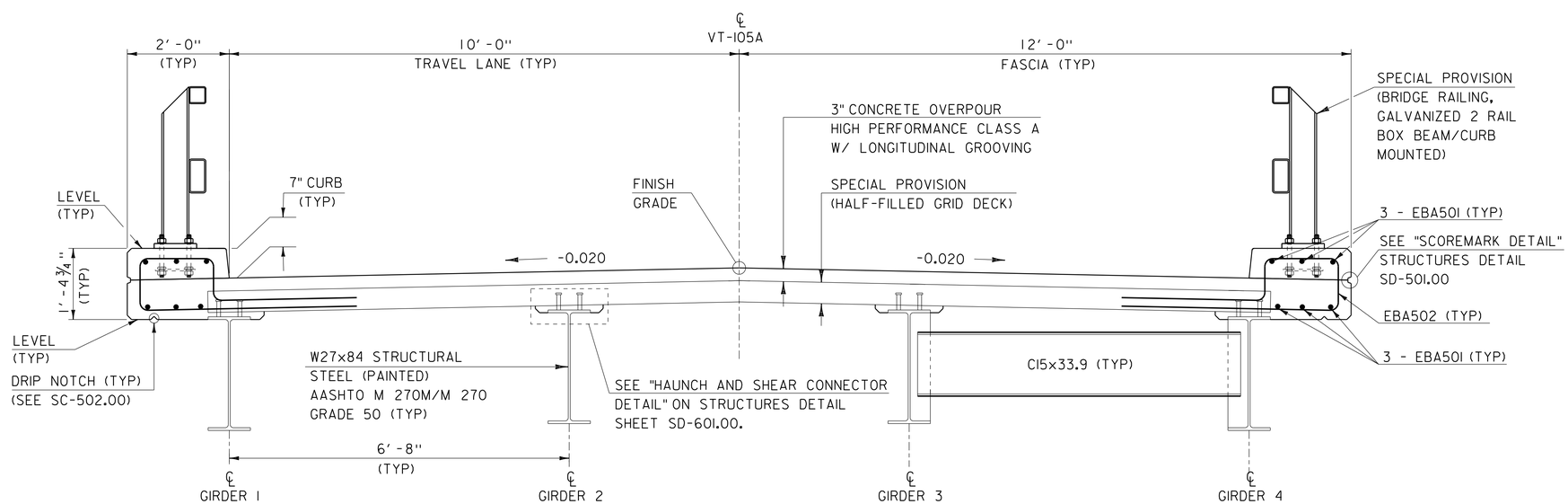

BRIDGE APPROACH SPAN TYPICAL

SCALE ¾" = 1'-0"

NOTE:

NF = NEAR FACE
FF = FAR FACE
EF = EACH FACE
▲ = CUT TO FIT IN FIELD
3" CLEAR, UNLESS OTHERWISE SPECIFIED ON THE PLANS.
2'-2" BAR LAP UNLESS OTHERWISE SPECIFIED ON THE PLANS.
BA = BRIDGE APPROACH SPAN
BT = BRIDGE TRUSS SPAN

PROJECT NAME: RICHFORD-SUTTON, PQ	
PROJECT NUMBER: BHF 0814(1)	
FILE NAME: s10c222sup.dgn	PLOT DATE: 26-SEP-2017
PROJECT LEADER: C. CARLSON	DRAWN BY: G. ROKES
DESIGNED BY: C. BURRALL	CHECKED BY: C. BURRALL
APPROACH SPAN TYPICAL	SHEET 26 OF 87

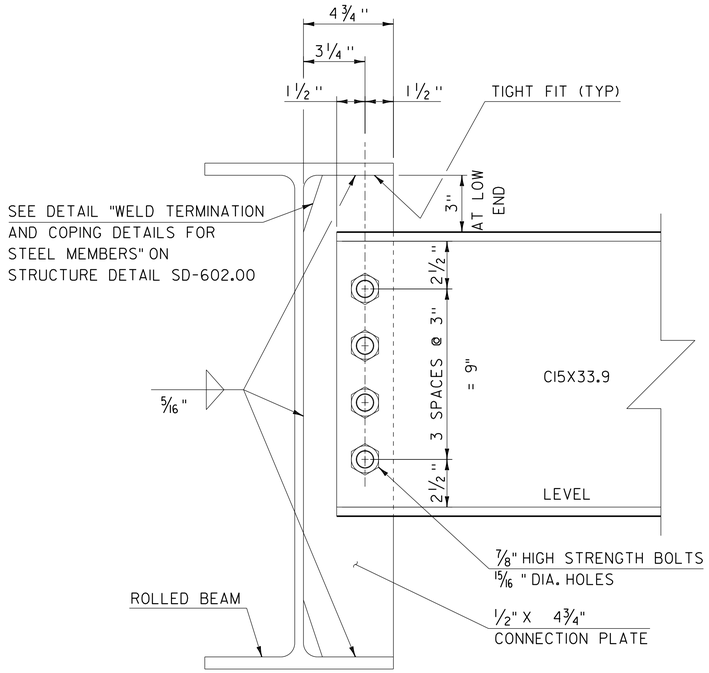

DIAPHRAGM

SCALE 1" = 1'-0"

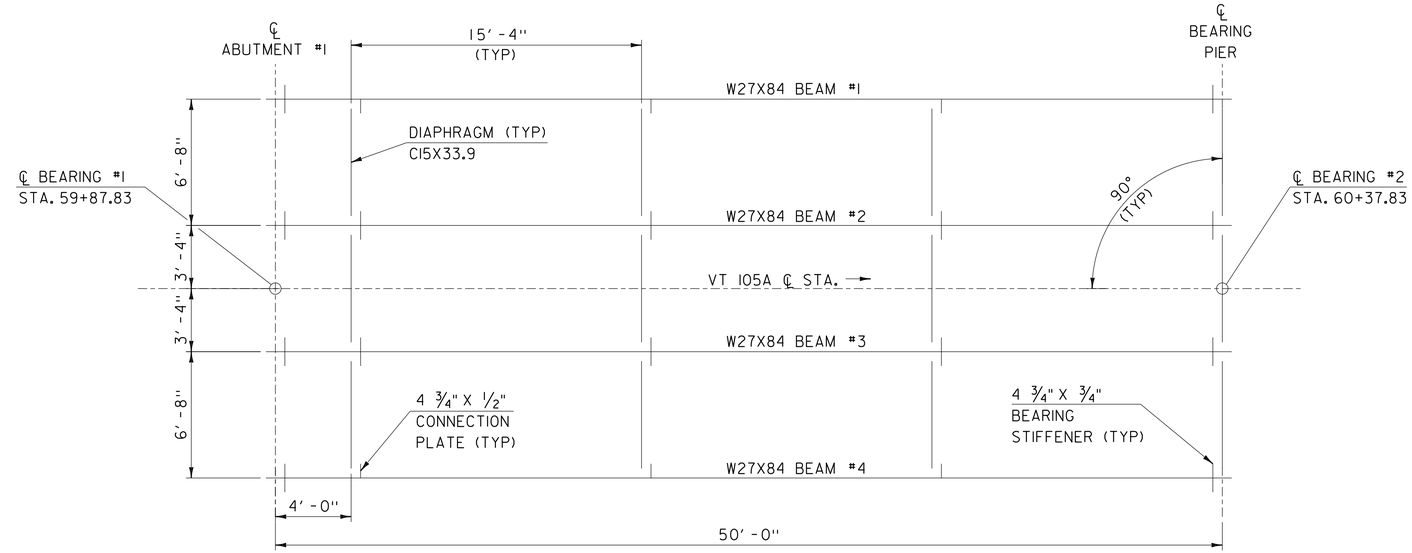

APPROACH SPAN FRAMING PLAN

SCALE 1/4" = 1'-0"

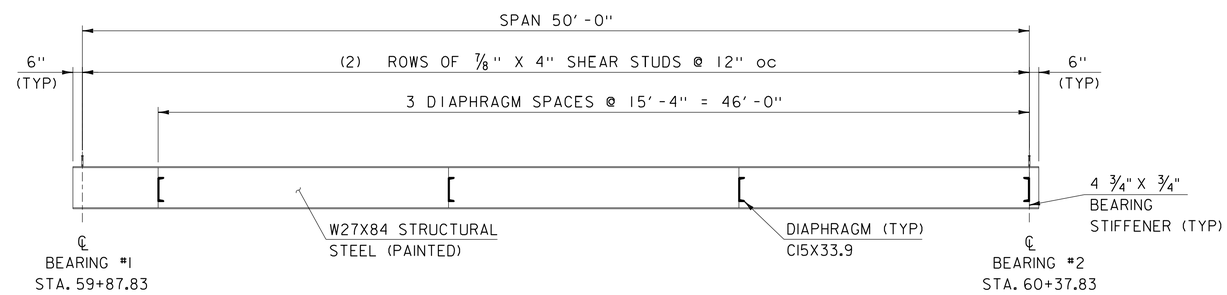

BEAM ELEVATION

SCALE 1/4" = 1'-0"

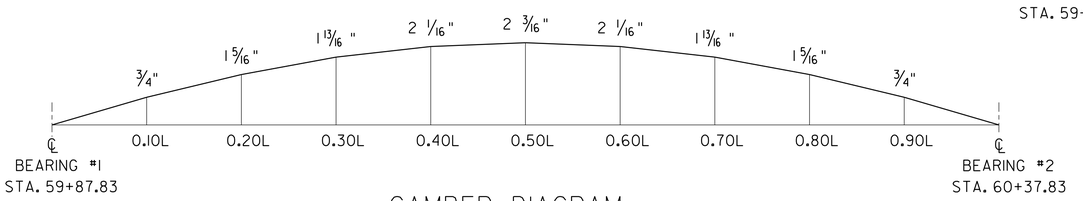

CAMBER DIAGRAM

HORIZONTAL SCALE 1/4" = 1'-0"
VERTICAL SCALE 1/2" = 1'-0"

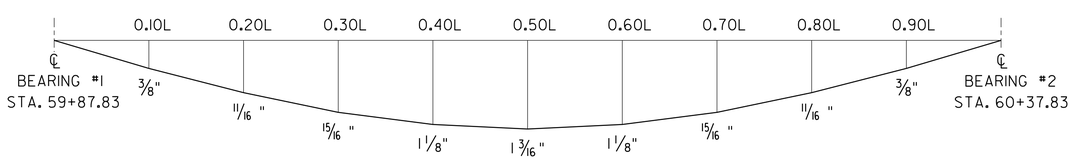

DEFLECTION DIAGRAM

HORIZONTAL SCALE 1/4" = 1'-0"
VERTICAL SCALE 1/8" = 1'-0"

* SHEAR CONNECTOR REQUIREMENTS SHOWN ARE MINIMUM REQUIREMENTS. THE HALF-FILLED GRID DECK MANUFACTURER SHALL BE RESPONSIBLE FOR DETERMINING THE TYPE, SIZE, AND SPACING OF THE SHEAR CONNECTORS IN THE APPROACH SPAN.

NOTES:

1. CAMBER AND DEFLECTION VALUES PROVIDED ARE IN INCHES. ALL VALUES ARE ALONG THE CENTERLINE OF THE BEAM.
2. POSITIVE CAMBER VALUES ARE UPWARD; POSITIVE DEFLECTION VALUES ARE DOWNWARD.
3. ALL APPROACH SPAN BEAMS SHALL BE DESIGNATED "CVN" AND SHALL BE CHARPY V-NOTCH TESTED IN ACCORDANCE WITH SUBSECTION 714.01 OF THE STANDARD SPECIFICATIONS.

PROJECT NAME: RICHFORD-SUTTON, PQ	
PROJECT NUMBER: BHF 0814(1)	
FILE NAME: s10c222sup.dgn	PLOT DATE: 26-SEP-2017
PROJECT LEADER: C. CARLSON	DRAWN BY: G. ROKES
DESIGNED BY: C. BURRALL	CHECKED BY: C. BURRALL
APPROACH SPAN FRAMING PLAN	SHEET 27 OF 87

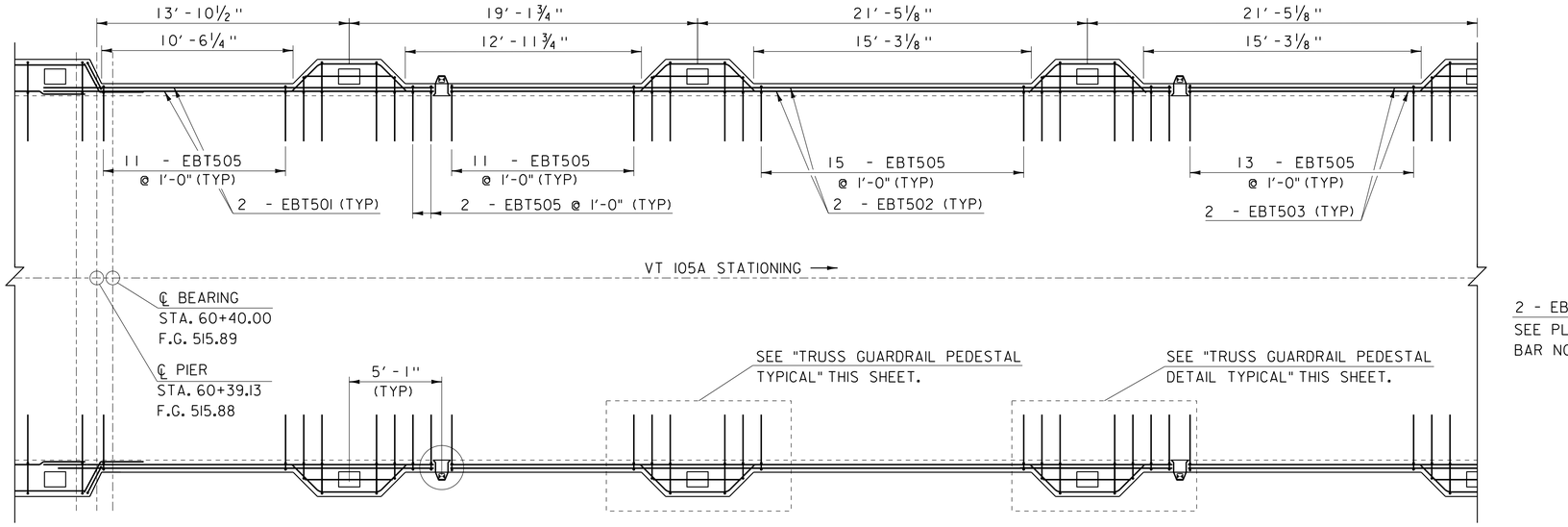

NOTE: BRIDGE IS SYMMETRICAL ABOUT THE CENTERLINE

TRUSS SPAN GEOMETRY & REINFORCING PLAN

SCALE ¼" = 1'-0"

TRUSS CENTER SPAN

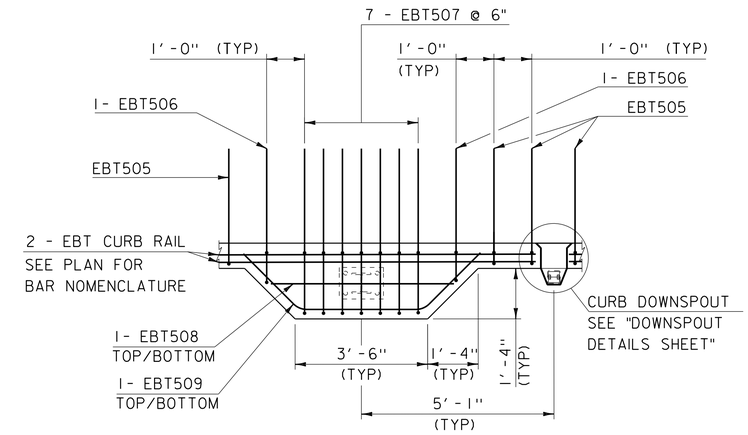

TRUSS GUARDRAIL PEDESTAL DETAIL TYPICAL

SCALE ½" = 1'-0"

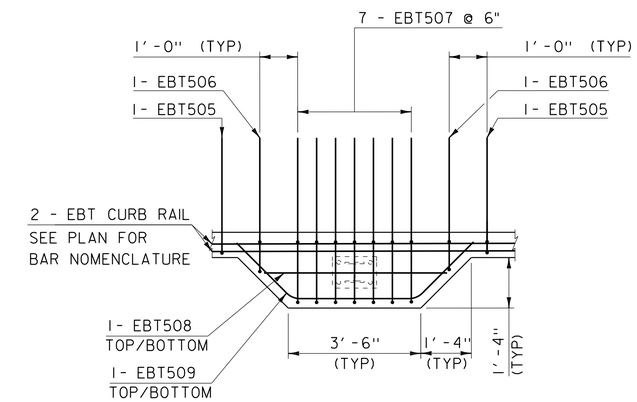

TRUSS GUARDRAIL PEDESTAL TYPICAL

SCALE ½" = 1'-0"

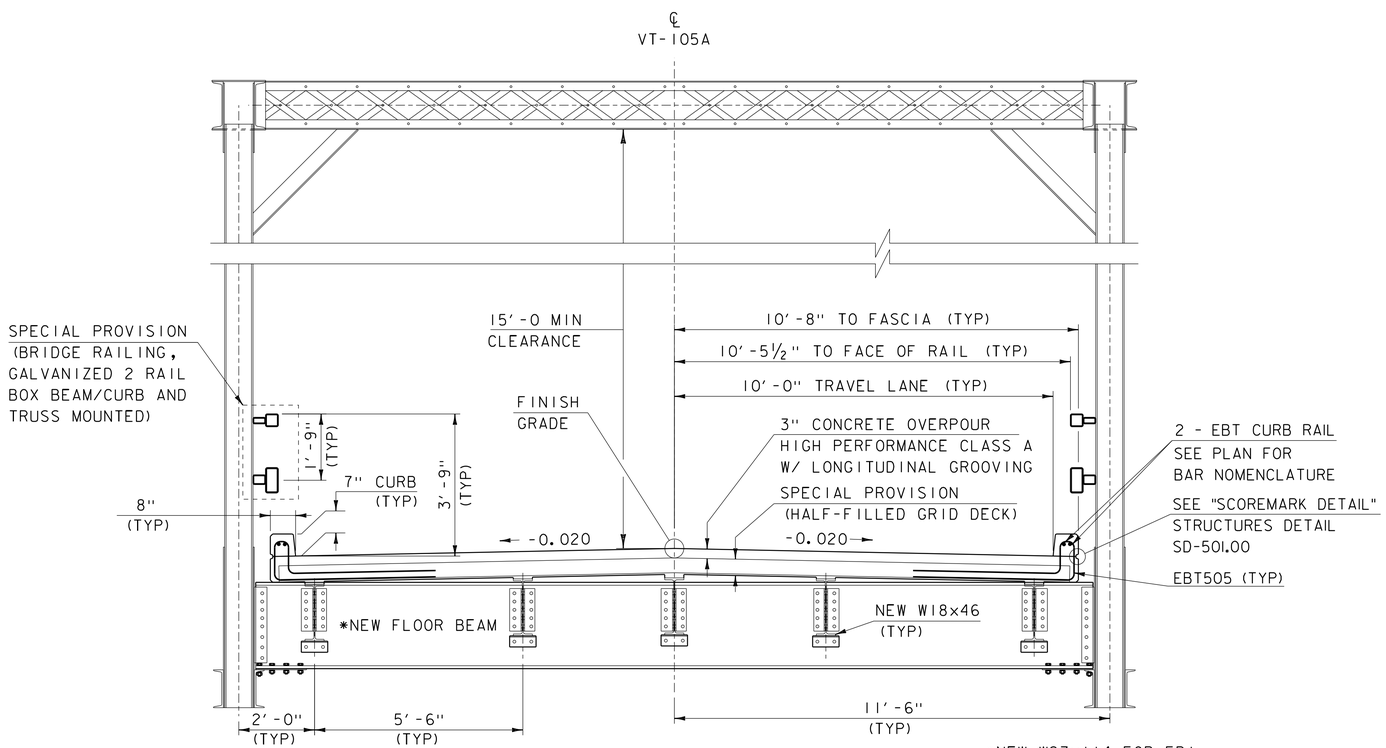

*NEW W27x114 FOR FB1
NEW W27x104 FOR FB2 & FB3

TRUSS SPAN TYPICAL SECTION

SCALE ½" = 1'-0"

NOTE:

NF = NEAR FACE
FF = FAR FACE
EF = EACH FACE
▲ = CUT TO FIT IN FIELD
3" CLEAR, UNLESS OTHERWISE SPECIFIED ON THE PLANS.
2'-2" BAR LAP UNLESS OTHERWISE SPECIFIED ON THE PLANS.
EBA = EPOXY BRIDGE APPROACH SPAN
EBT = EPOXY BRIDGE TRUSS SPAN

PROJECT NAME: RICHFORD-SUTTON, PQ	
PROJECT NUMBER: BHF 0814(1)	
FILE NAME: s10c222sup.dgn	PLOT DATE: 26-SEP-2017
PROJECT LEADER: C. CARLSON	DRAWN BY: G. ROKES
DESIGNED BY: C. BURRALL	CHECKED BY: C. BURRALL
TRUSS SPAN TYPICAL 1	SHEET 28 OF 87

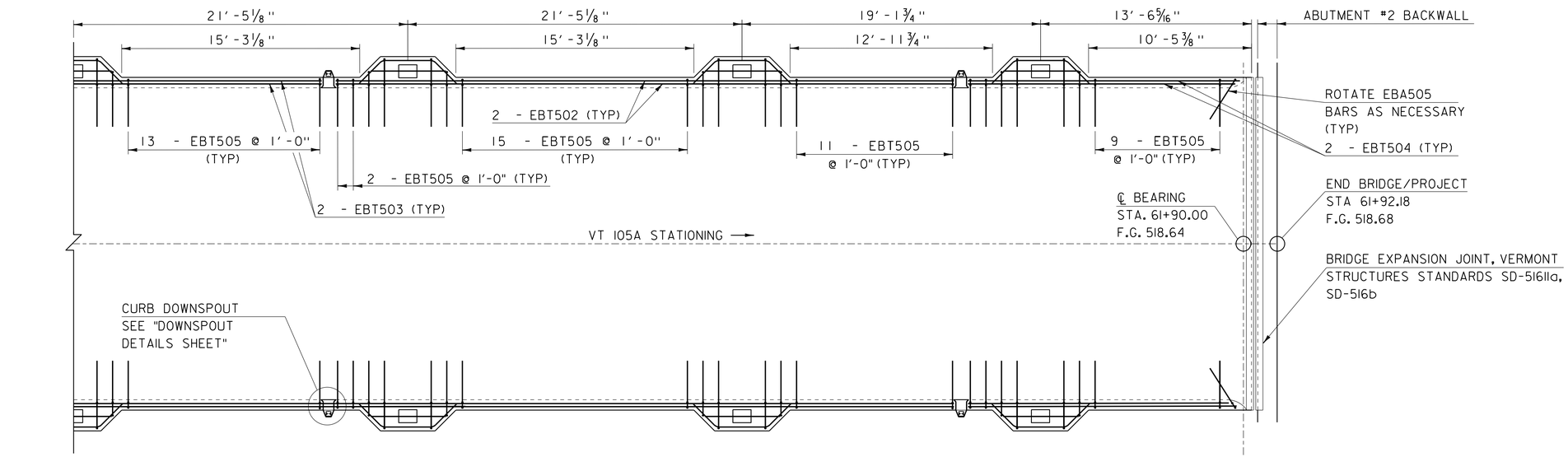

TRUSS CENTER SPAN

TRUSS SPAN GEOMETRY & REINFORCING PLAN

SCALE 1/4" = 1'-0"

NOTE: BRIDGE IS SYMMETRICAL
ABOUT THE CENTERLINE

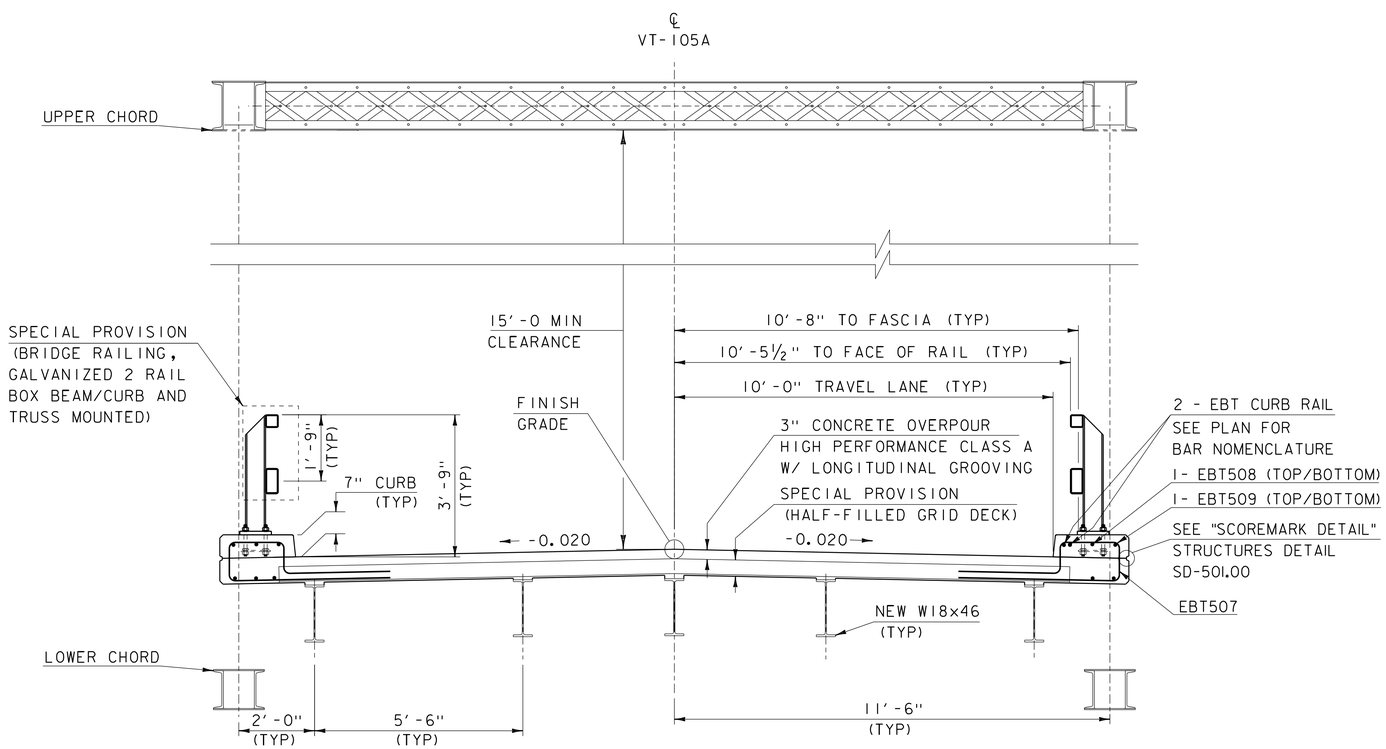

TRUSS SPAN TYPICAL SECTION

SCALE 1/2" = 1'-0"

PROJECT NAME: RICHFORD-SUTTON, PQ	
PROJECT NUMBER: BHF 0814(1)	
FILE NAME: s10c222sup.dgn	PLOT DATE: 26-SEP-2017
PROJECT LEADER: C. CARLSON	DRAWN BY: G. ROKES
DESIGNED BY: C. BURRALL	CHECKED BY: C. BURRALL
TRUSS SPAN TYPICAL 2	SHEET 29 OF 87

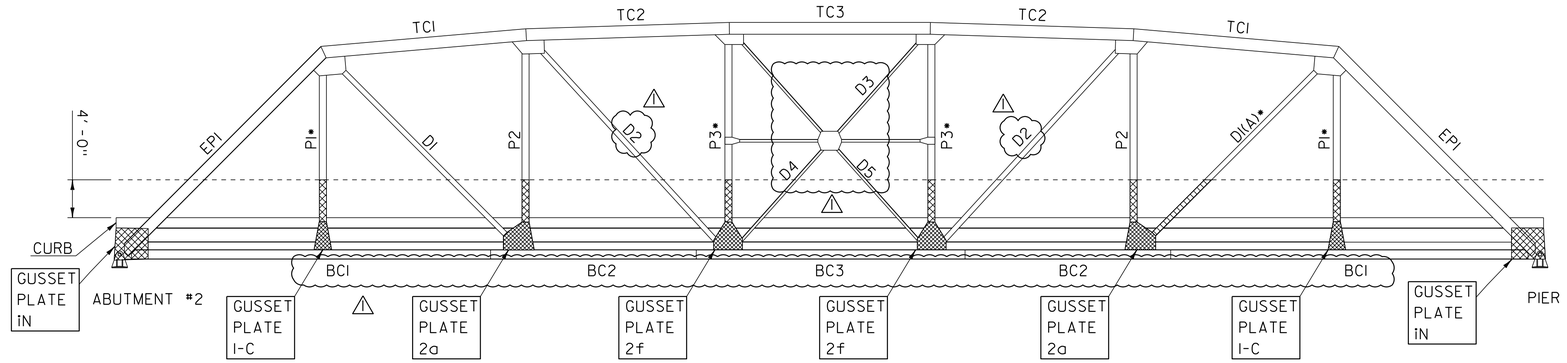

TRUSS LEFT SIDE ELEVATION (DOWN STREAM)

SCALE 3/8" = 1'-0"

THE MEMBERS SHOWN TO BE REPLACED ARE THE MINIMUM REQUIREMENT. FIELD INSPECTION MAY REQUIRE THAT ADDITIONAL MEMBERS BE REPLACED. ALL REPLACEMED MEMBERS SHALL BE OF EQUAL GEOMETRY AND SECTION PROPERTIES AS THOSE BEING REPLACED (UNLESS OTHERWISE NOTED).

SALVAGE ALL MEMBERS THAT ARE NOT IDENTIFIED AS REPLACE.

REPLACE THE FOLLOWING:

IDENTIFICATION MARK	COMMENTS
FB1, FB2, FB3	COMPLETE REPLACEMENT (FLOOR BEAMS)
LD1, LD2, LD3, LD4 ,LD5, LD6	COMPLETE REPLACEMENT (BOTTOM LATERALS)
J1, J2, J3, J4, J5, J6	COMPLETE REPLACEMENT (STRINGERS)
LP1, LP2, LP3	COMPLETE REPLACEMENT (CONNECTION PLATES)
P1, P2, P3	REPLACE 4'-0" FROM TOP OF CURB AND BELOW
iN, 1-C, 2a, 2f	COMPLETE REPLACEMENT (GUSSET PLATES)
D1(A) - DIAGONAL ON DOWN STREAM TRUSS	REPLACE 4'-0" FROM TOP OF CURB AND BELOW
D1(B) - DIAGONAL ON UP STREAM TRUSS	REPLACE 4'-0" FROM TOP OF CURB AND BELOW

TRUSS LOWER CHORD LEFT SIDE (DOWN STREAM)

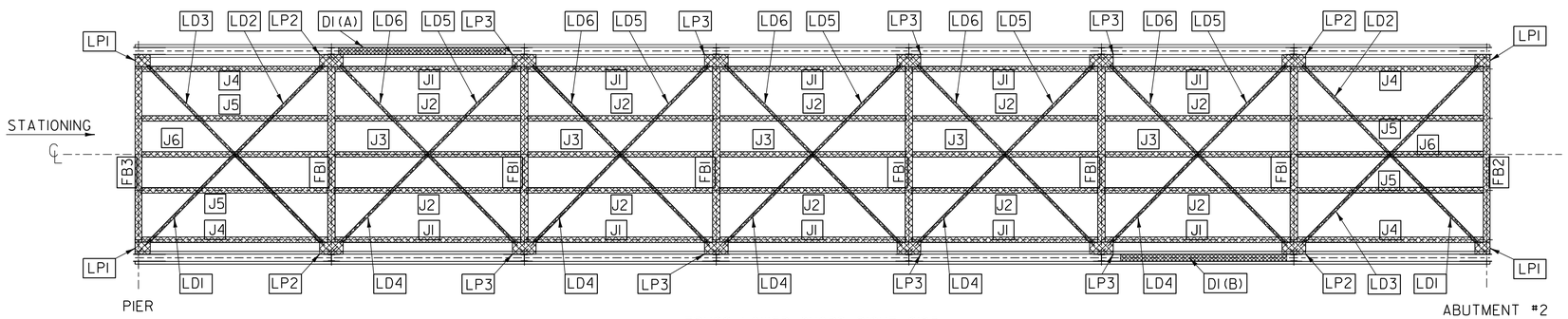

TRUSS LOWER CHORD RIGHT SIDE (UP STREAM)

TRUSS FLOOR SYSTEM PLAN

SCALE 3/8" = 1'-0"

LEGEND

- REPLACED MEMBERS
- ### REPLACED MEMBERS NOMENCLATURE AS INDICATED IN ORIGINAL PLANS
- • FRACTURE CRITICAL MEMBER (FCM)

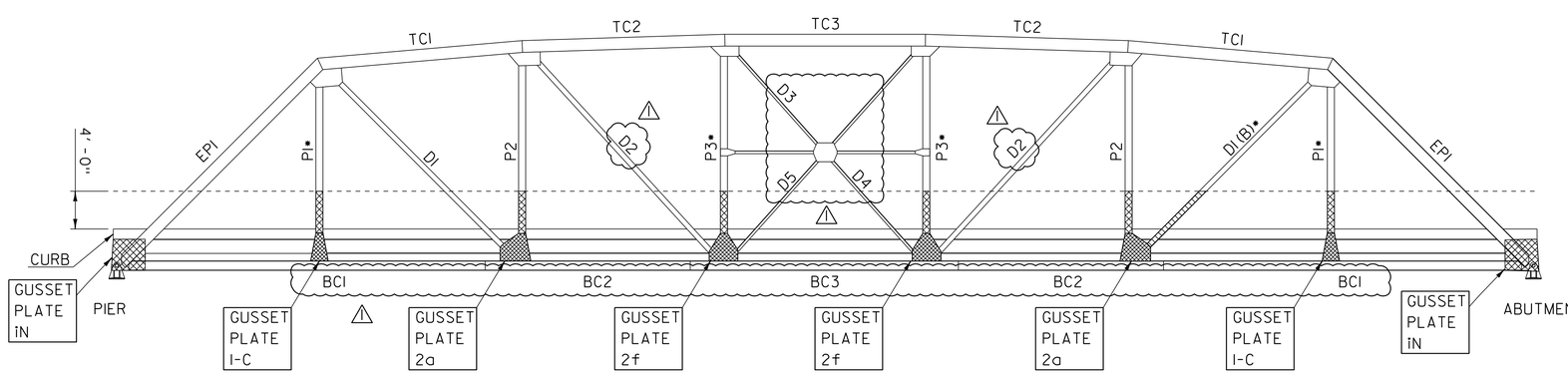

TRUSS RIGHT SIDE ELEVATION (UP STREAM)

SCALE 3/8" = 1'-0"

REVISION	DATE	BY	DESCRIPTION
1	11/27/2017	VAOT	MODIFIED FCM

PROJECT NAME: RICHFORD-SUTTON, PQ
PROJECT NUMBER: BHF 0814(1)

FILE NAME: s10c222sup.dgn
PROJECT LEADER: C. CARLSON
DESIGNED BY: C. BURRALL
TRUSS REPAIRS

PLOT DATE: 21-NOV-2017
DRAWN BY: G. ROKES
CHECKED BY: C. BURRALL
SHEET 30 OF 87

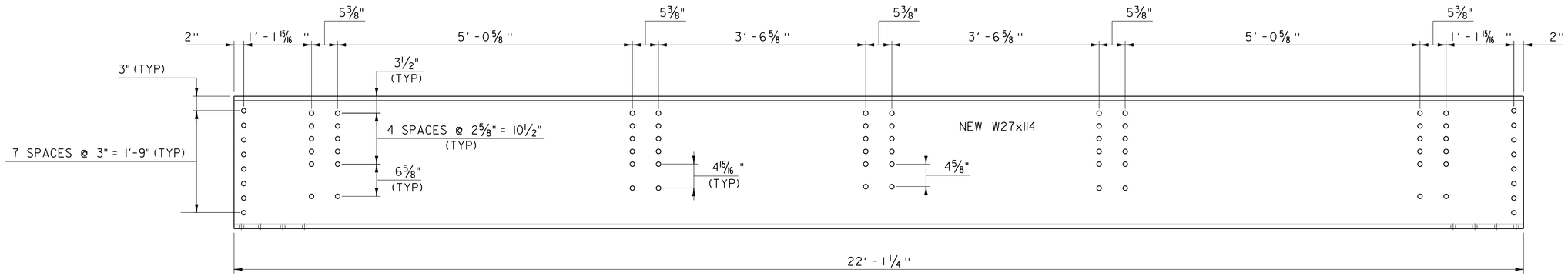

FLOOR BEAM 1 ELEVATION (FB1)

SCALE 1" = 1'-0"

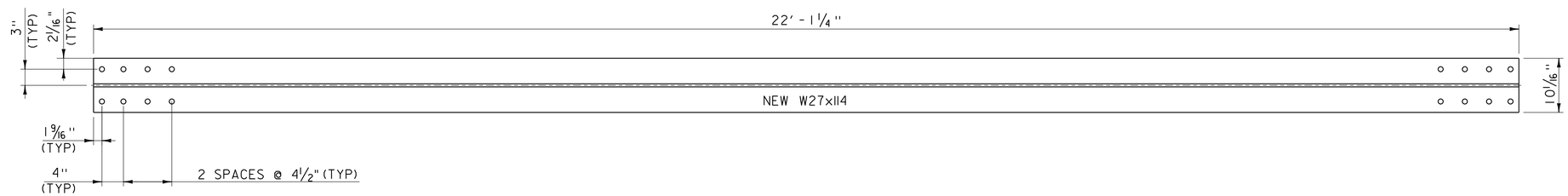

FLOOR BEAM 1 (FB1) BOTTOM FLANGE

SCALE 1" = 1'-0"

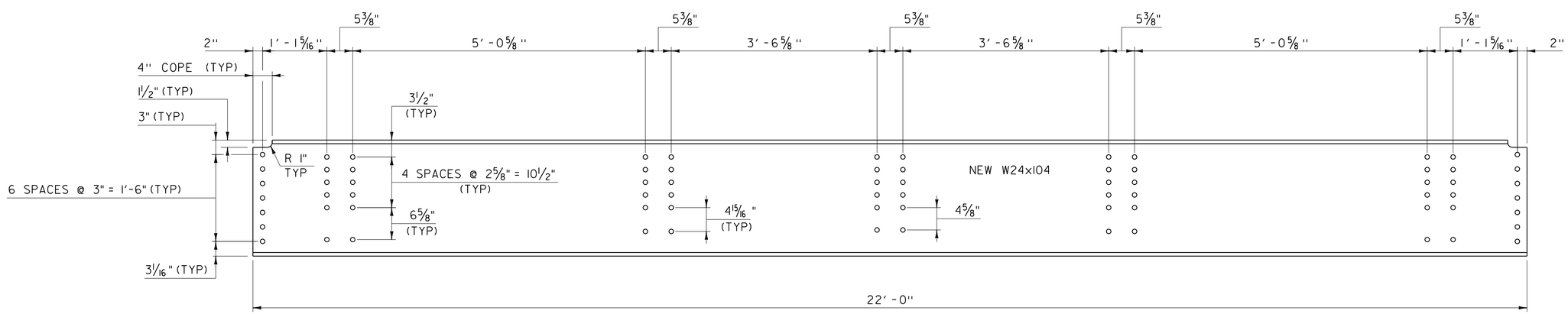

FLOOR BEAM 2, 3 ELEVATION (FB2, FB3)

SCALE 1" = 1'-0"

NOTES:

1. ALL TRUSS FLOOR BEAMS SHALL BE DESIGNATED "CVN" AND SHALL BE CHARPY V-NOTCH TESTED IN ACCORDANCE WITH SUBSECTION 714.01 OF THE STANDARD SPECIFICATIONS.

PROJECT NAME: RICHFORD-SUTTON, PQ	
PROJECT NUMBER: BHF 0814(1)	
FILE NAME: s10c222sup.dgn	PLOT DATE: 26-SEP-2017
PROJECT LEADER: C. CARLSON	DRAWN BY: G. ROKES
DESIGNED BY: C. BURRALL	CHECKED BY: C. BURRALL
FLOOR BEAM DETAILS	SHEET 31 OF 87

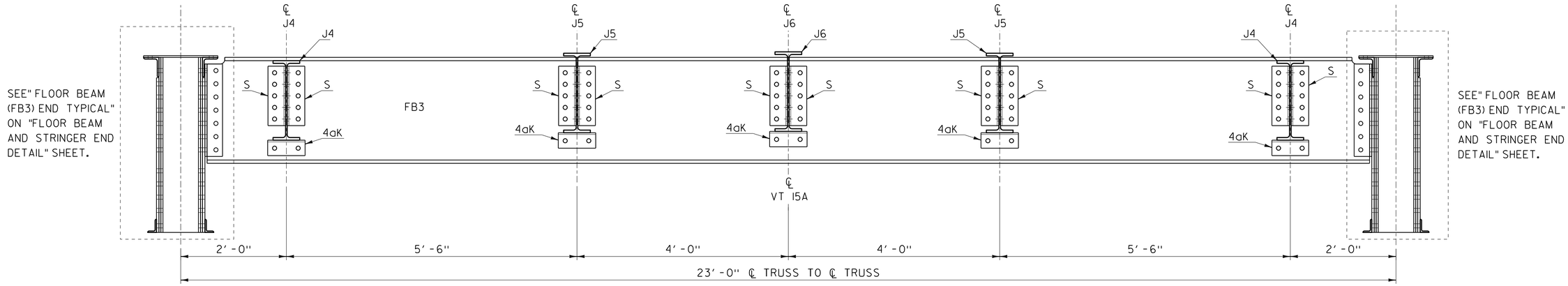

FLOOR BEAM ASSEMBLY FB3 (PIER)

SCALE 1" = 1'-0"

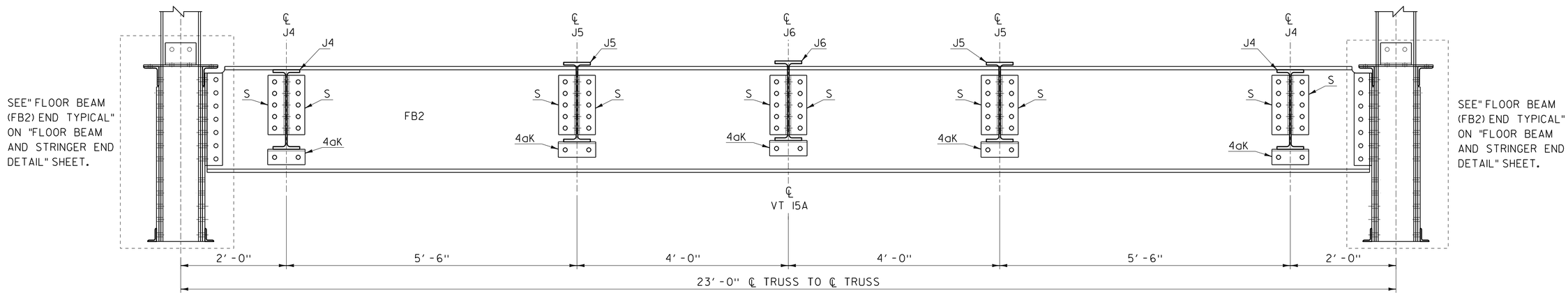

FLOOR BEAM ASSEMBLY FB2 (ABUTMENT #2)

SCALE 1" = 1'-0"

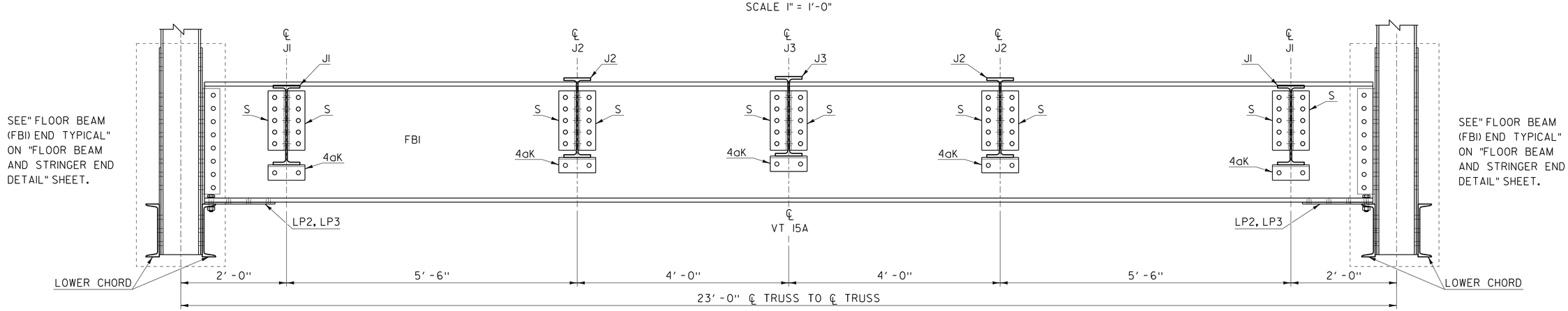

FLOOR BEAM ASSEMBLY FB1

SCALE 1" = 1'-0"

PROJECT NAME: RICHFORD-SUTTON, PQ	
PROJECT NUMBER: BHF 0814(1)	
FILE NAME: s10c222sup.dgn	PLOT DATE: 26-SEP-2017
PROJECT LEADER: C. CARLSON	DRAWN BY: G. ROKES
DESIGNED BY: C. BURRALL	CHECKED BY: C. BURRALL
FLOOR BEAM ASSEMBLY DETAILS	SHEET 32 OF 87

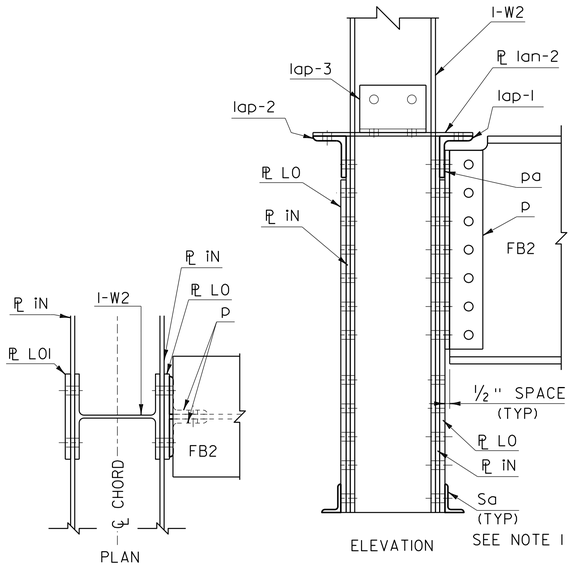

FLOOR BEAM (FB2) END TYPICAL

SCALE 1½" = 1'-0"

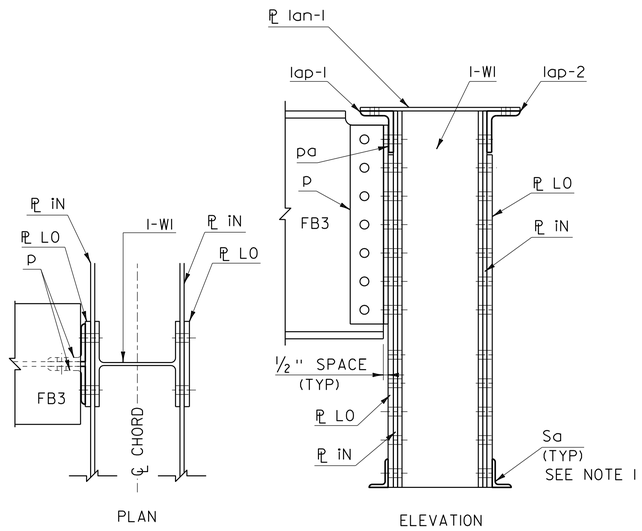

FLOOR BEAM (FB3) END TYPICAL

SCALE 1½" = 1'-0"

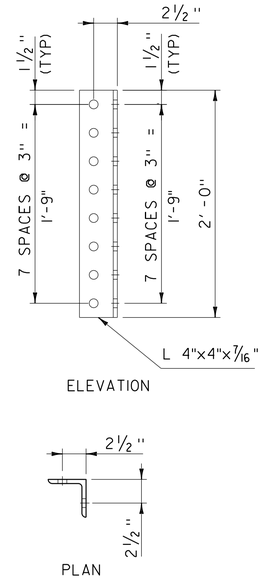

FLOOR BEAM CONNECTION BRACKET (h)

SCALE 1½" = 1'-0"

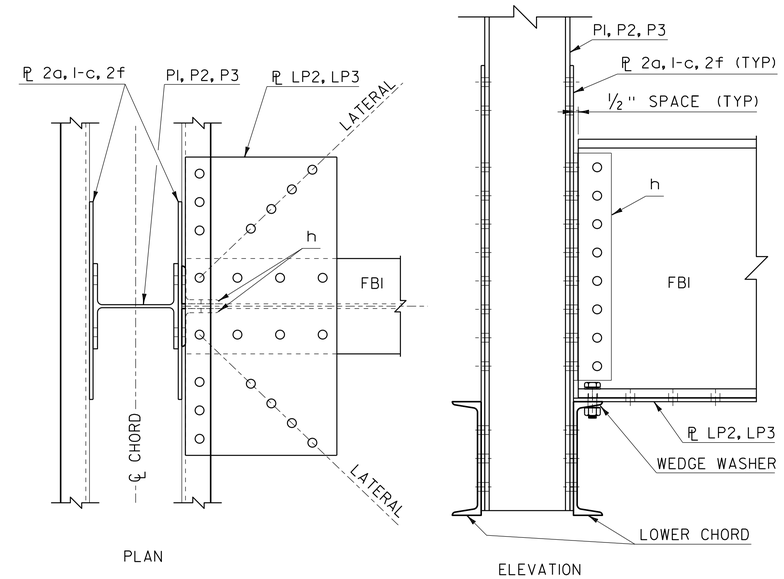

FLOOR BEAM (FBI) END TYPICAL

SCALE 1½" = 1'-0"

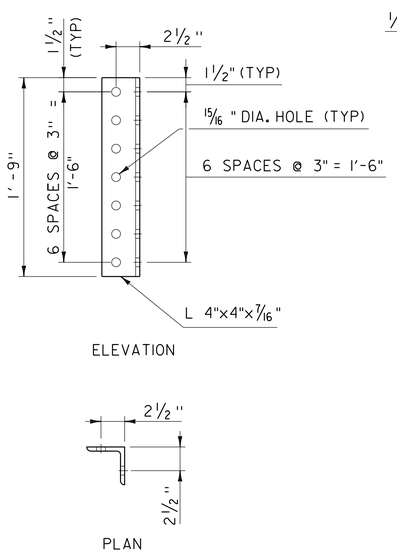

FLOOR BEAM CONNECTION BRACKET (p)

SCALE 1½" = 1'-0"

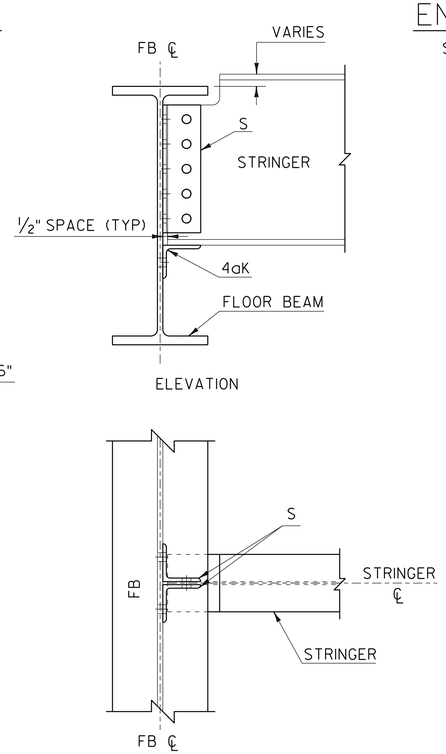

STRINGER END TYPICAL

SCALE 1½" = 1'-0"

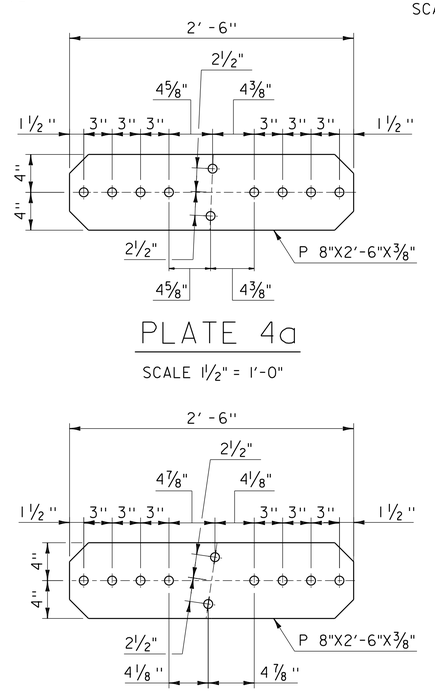

PLATE 4a

SCALE 1½" = 1'-0"

PLATE 4b

SCALE 1½" = 1'-0"

NOTE 1. SEE "BEARING ANCHOR BRACKET (Sa)" ON "PIER COVER PLATE DETAILS" AND "ABUTMENT #2 COVER PLATE DETAILS" SHEETS

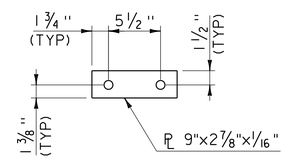

SPACER PLATE (pa)

SCALE 1½" = 1'-0"

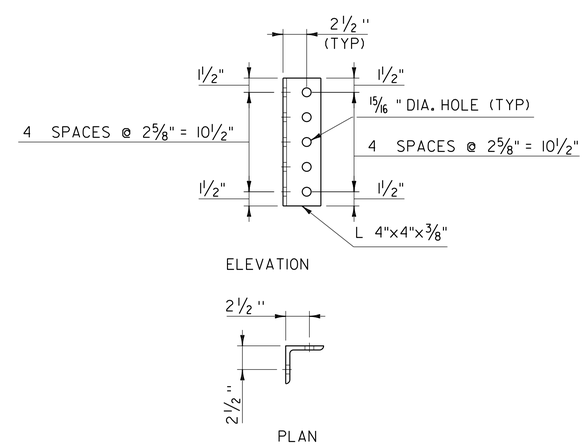

STRINGER CONNECTION BRACKET (S)

SCALE 1½" = 1'-0"

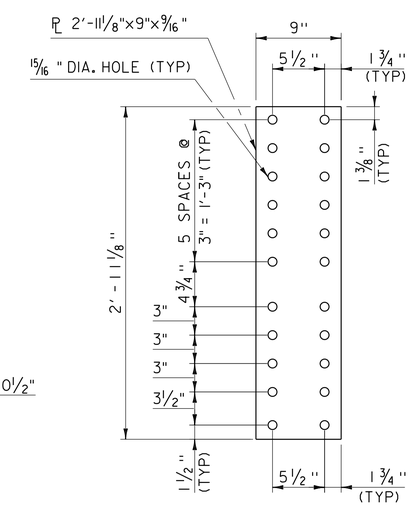

SPACER PLATE LO

SCALE 1½" = 1'-0"

PROJECT NAME: RICHFORD-SUTTON, PQ	
PROJECT NUMBER: BHF 0814(1)	
FILE NAME: s10c222sup.dgn	PLOT DATE: 26-SEP-2017
PROJECT LEADER: C. CARLSON	DRAWN BY: G. ROKES
DESIGNED BY: C. BURRALL	CHECKED BY: C. BURRALL
FLOOR BEAM AND STRINGER END DETAILS	SHEET 33 OF 87

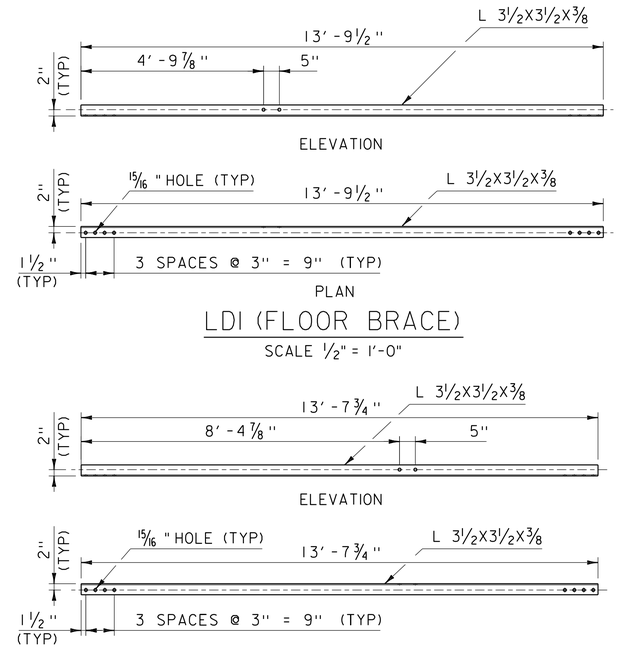

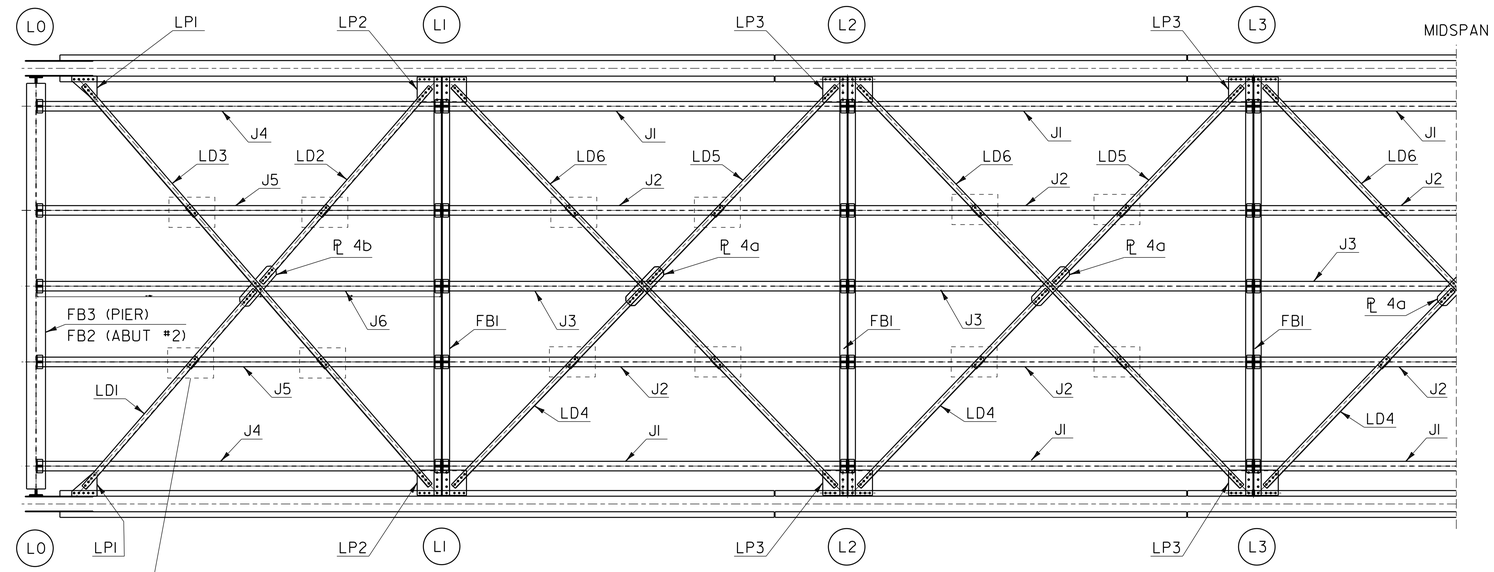

FLOOR BEAM BRACING LAYOUT

SCALE ¼" = 1′-0"

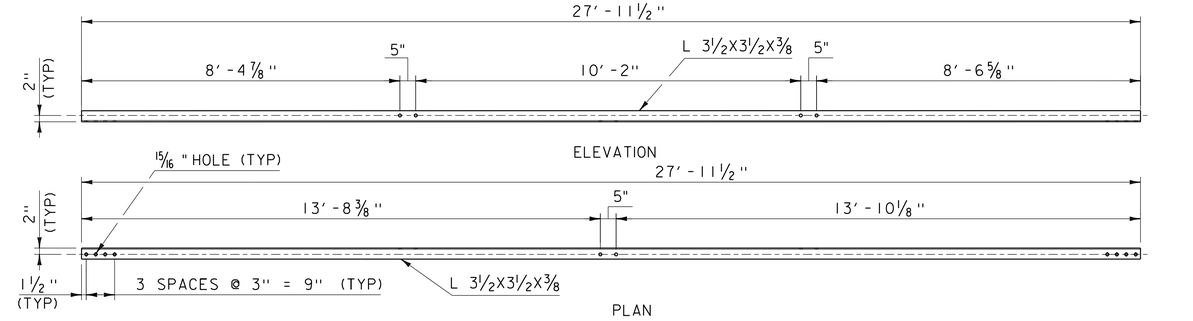

PROJECT NAME: RICHFORD-SUTTON, PQ	
PROJECT NUMBER: BHF 0814(1)	
FILE NAME: s10c222sup.dgn	PLOT DATE: 26-SEP-2017
PROJECT LEADER: C. CARLSON	DRAWN BY: G. ROKES
DESIGNED BY: C. BURRALL	CHECKED BY: C. BURRALL
FLOOR BEAM BRACING DETAILS 1	SHEET 34 OF 87

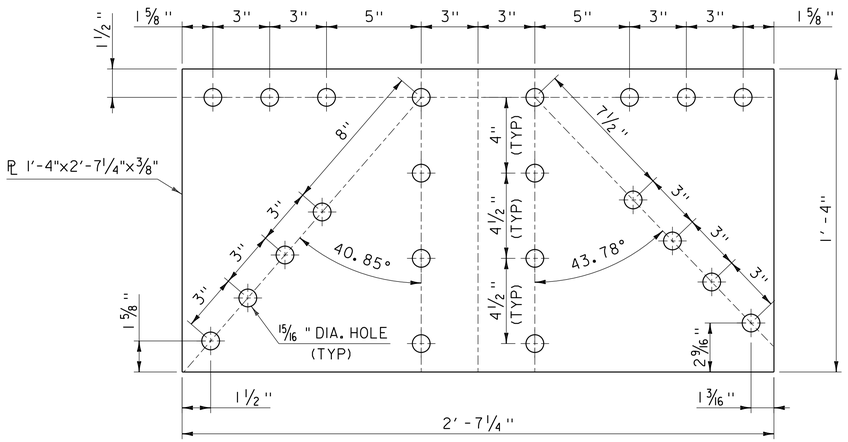

LP2 PLATE

SCALE 3/4" = 1'-0"

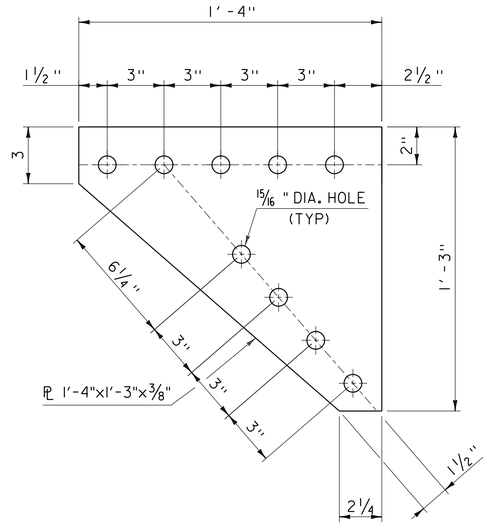

LPI PLATE

SCALE 3/4" = 1'-0"

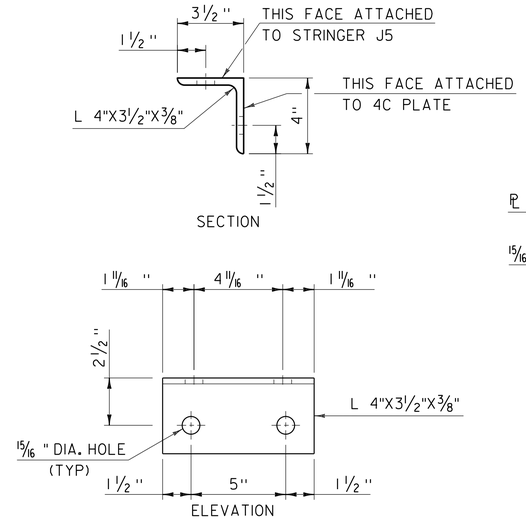

4e L SHAPE

SCALE 3/4" = 1'-0"

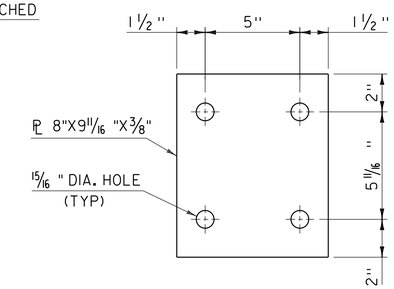

4C PLATE

SCALE 3/4" = 1'-0"

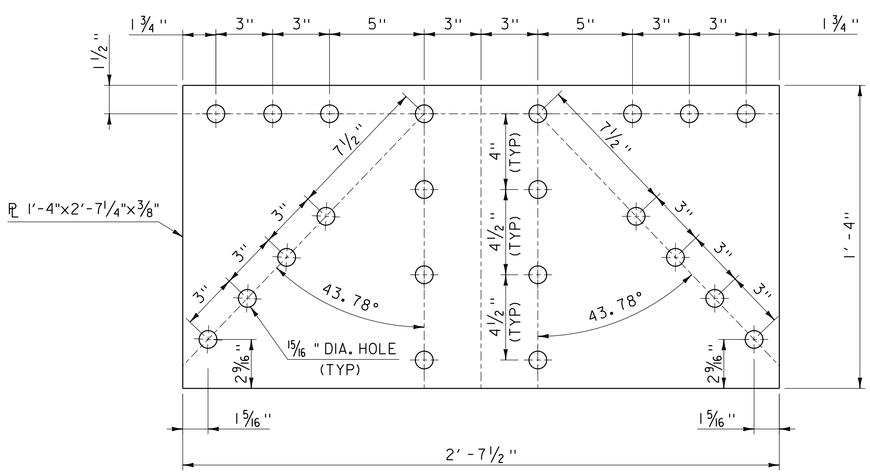

LP3 PLATE

SCALE 3/4" = 1'-0"

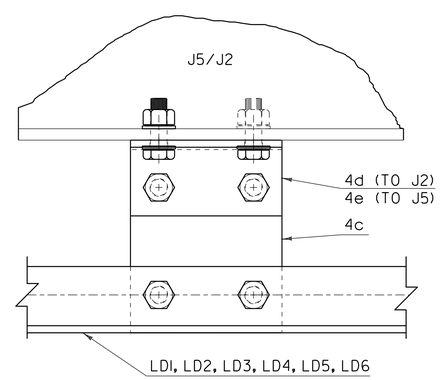

ELEVATION

FLOOR BEAM BRACING TO STRINGER ASSEMBLY TYPICAL

SCALE 3/4" = 1'-0"

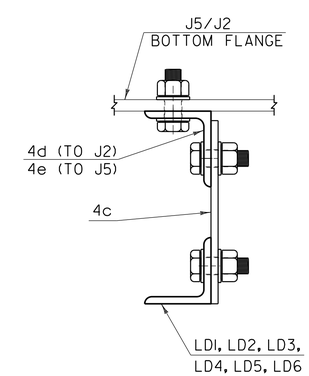

SECTION

FLOOR BEAM BRACING TO STRINGER ASSEMBLY TYPICAL

SCALE 3/4" = 1'-0"

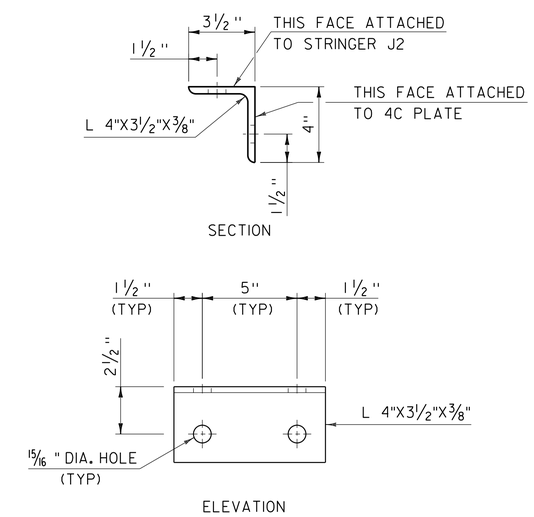

4d L SHAPE

SCALE 3/4" = 1'-0"

PROJECT NAME: RICHFORD-SUTTON, PQ	
PROJECT NUMBER: BHF 0814(1)	
FILE NAME: s10c222sup.dgn	PLOT DATE: 26-SEP-2017
PROJECT LEADER: C. CARLSON	DRAWN BY: G. ROKES
DESIGNED BY: C. BURRALL	CHECKED BY: C. BURRALL
FLOOR BEAM BRACING DETAILS 2	SHEET 35 OF 87

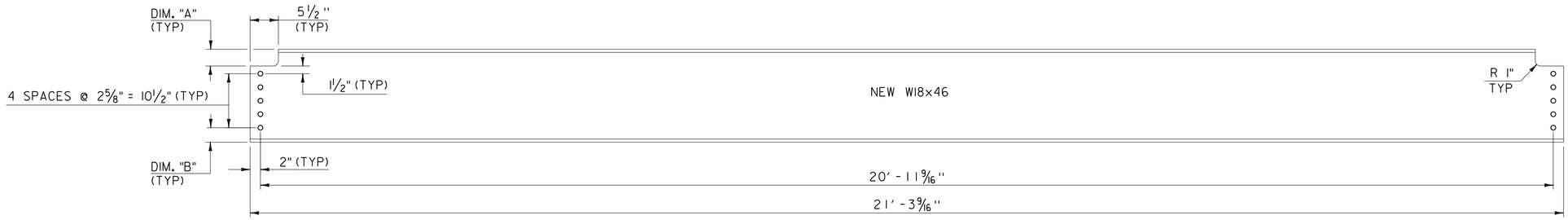

FLOOR STRINGER J1, J2, J3 ELEVATION

SCALE 1" = 1'-0"

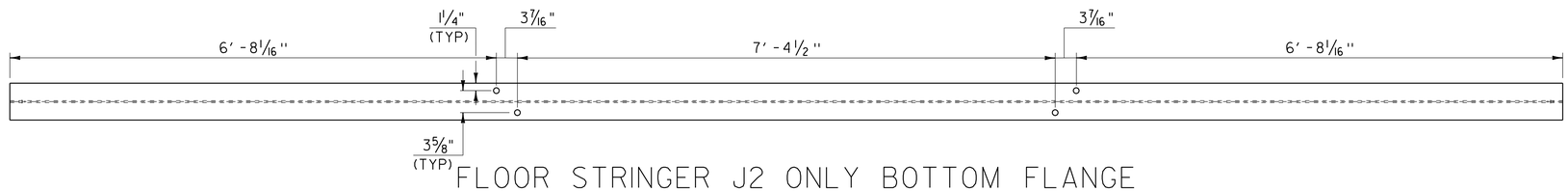

FLOOR STRINGER J2 ONLY BOTTOM FLANGE

SCALE 1" = 1'-0"

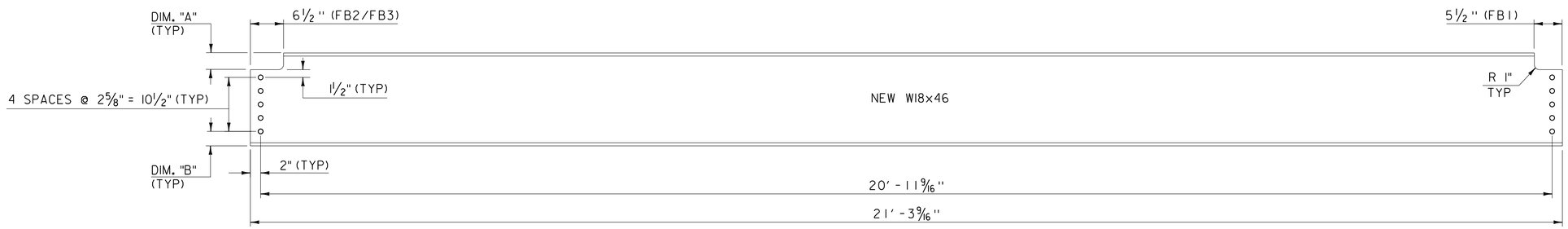

FLOOR STRINGER J4, J5, J6 ELEVATION

SCALE 1" = 1'-0"

NEW W18x46

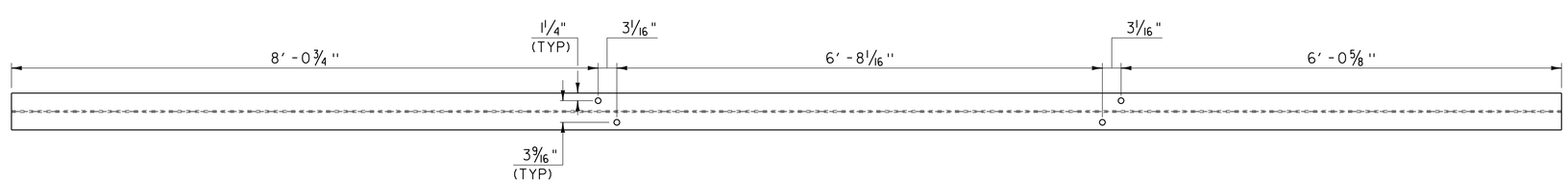

FLOOR STRINGER J5 LEFT (BOTTOM FLANGE ONLY)

SCALE 1" = 1'-0"

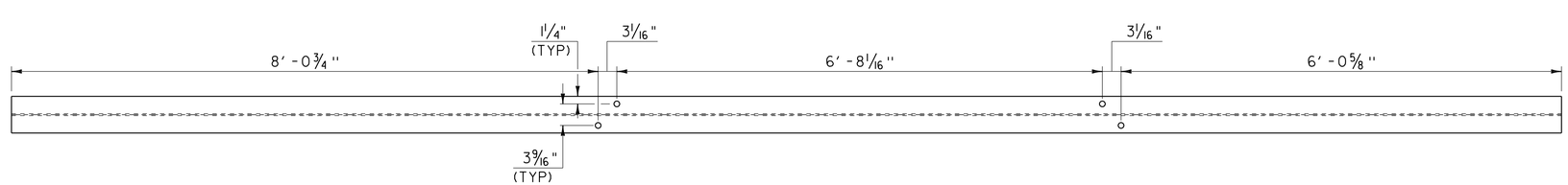

FLOOR STRINGER J5 RIGHT (BOTTOM FLANGE ONLY)

SCALE 1" = 1'-0"

STRINGER NAME	DIM. A	DIM. B
J1	1 1/4"	4 13/16 "
J2	2 15/16 "	3 1/8"
J3	3 1/4"	2 13/16 "
J4	1 1/4"	4 13/16 "
J5	2 15/16 "	3 1/8"
J6	3 1/4"	2 13/16 "

FLOOR STRINGER DIMENSION TABLE

NOTES:

1. ALL TRUSS STRINGERS SHALL BE DESIGNATED "CVN" AND SHALL BE CHARPY V-NOTCH TESTED IN ACCORDANCE WITH SUBSECTION 714.01 OF THE STANDARD SPECIFICATIONS.

PROJECT NAME: RICHFORD-SUTTON, PQ
PROJECT NUMBER: BHF 0814(1)

FILE NAME: s10c222sup.dgn
PROJECT LEADER: C. CARLSON
DESIGNED BY: C. BURRALL
STRINGER DETAILS

PLOT DATE: 26-SEP-2017
DRAWN BY: G. ROKES
CHECKED BY: C. BURRALL
SHEET 36 OF 87

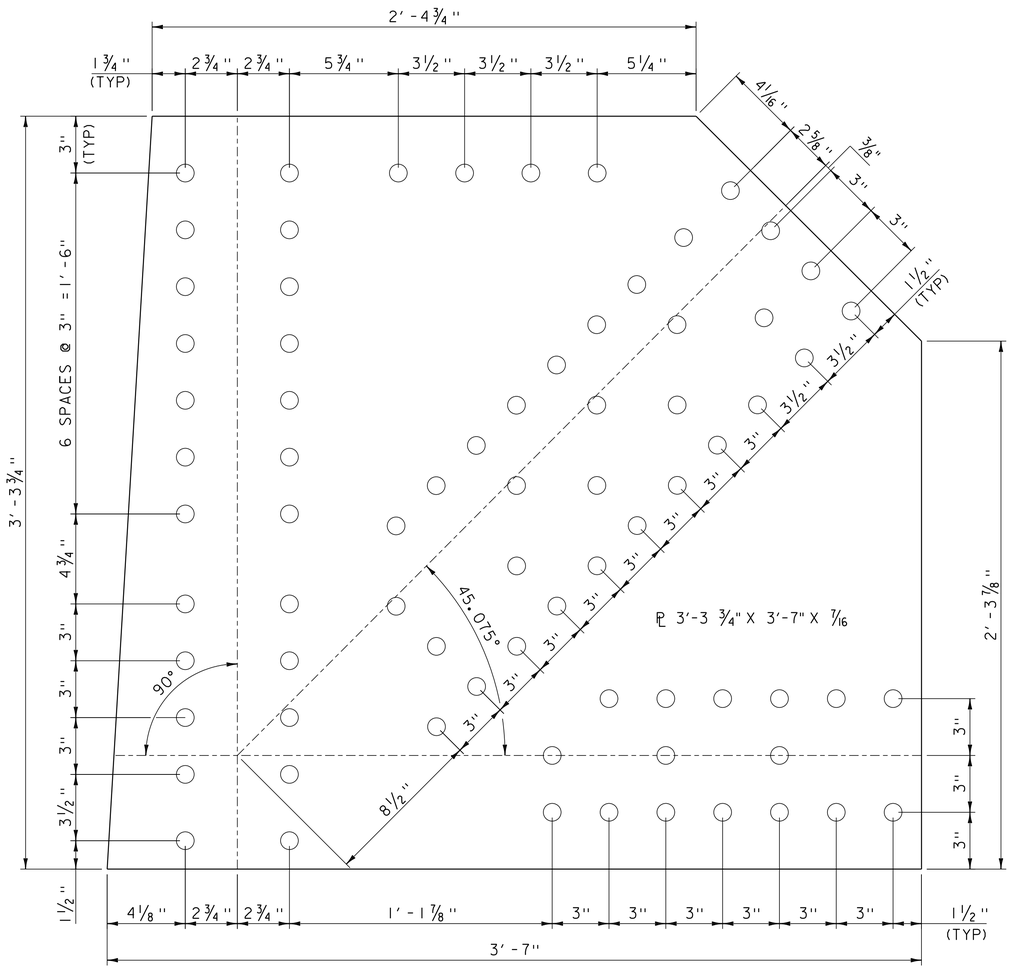

GUSSET PLATE 1N

SCALE 1/2" = 1'-0"

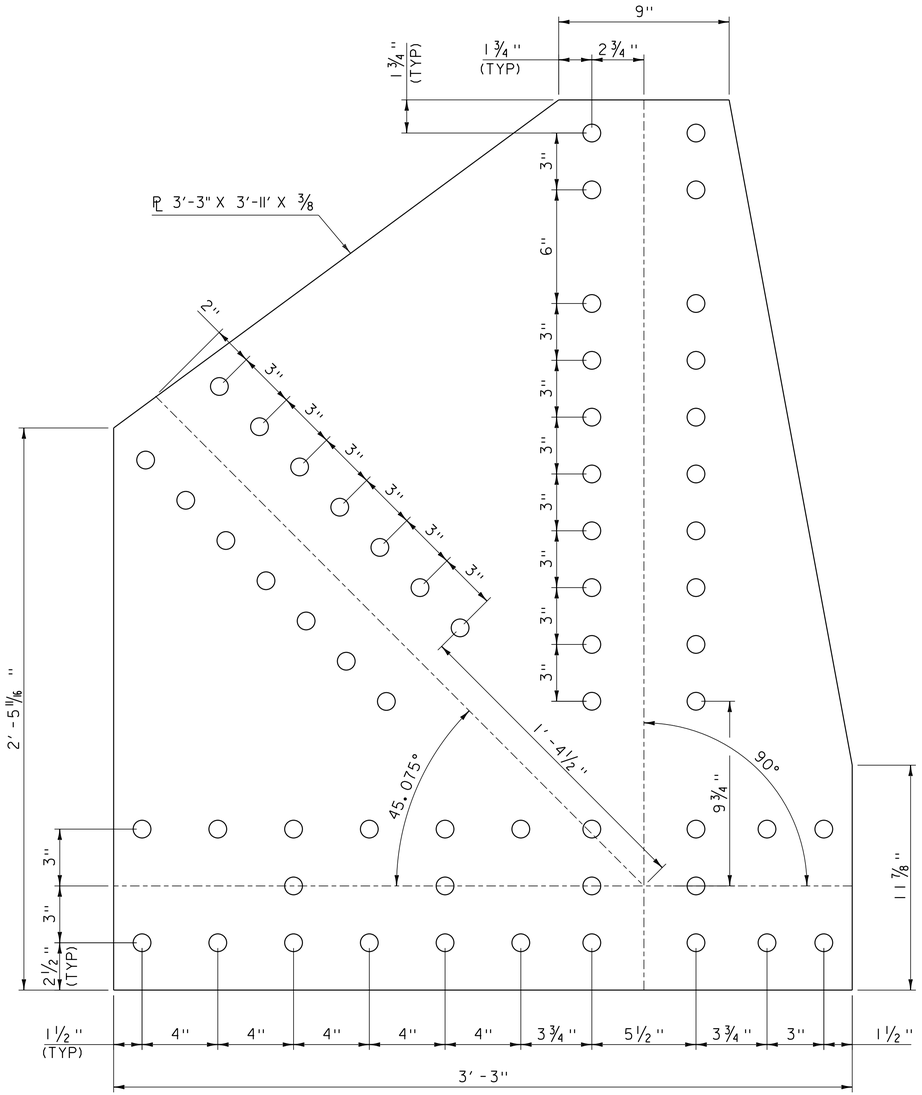

GUSSET PLATE 2a

SCALE 1/2" = 1'-0"

NOTES:

1. ALL NEW GUSSET PLATES SHALL BE DESIGNATED FCM (FRACTURE CRITICAL MEMBERS).

REVISION	DATE	BY	DESCRIPTION
1	11/27/2017	VAOT	MODIFIED FCM NOTE

PROJECT NAME: RICHFORD-SUTTON, PQ
PROJECT NUMBER: BHF 0814(1)

FILE NAME: s10c222sup.dgn
PROJECT LEADER: C. CARLSON
DESIGNED BY: C. BURRALL
GUSSET PLATE DETAILS 1

PLOT DATE: 21-NOV-2017
DRAWN BY: G. ROKES
CHECKED BY: C. BURRALL
SHEET 37 OF 87

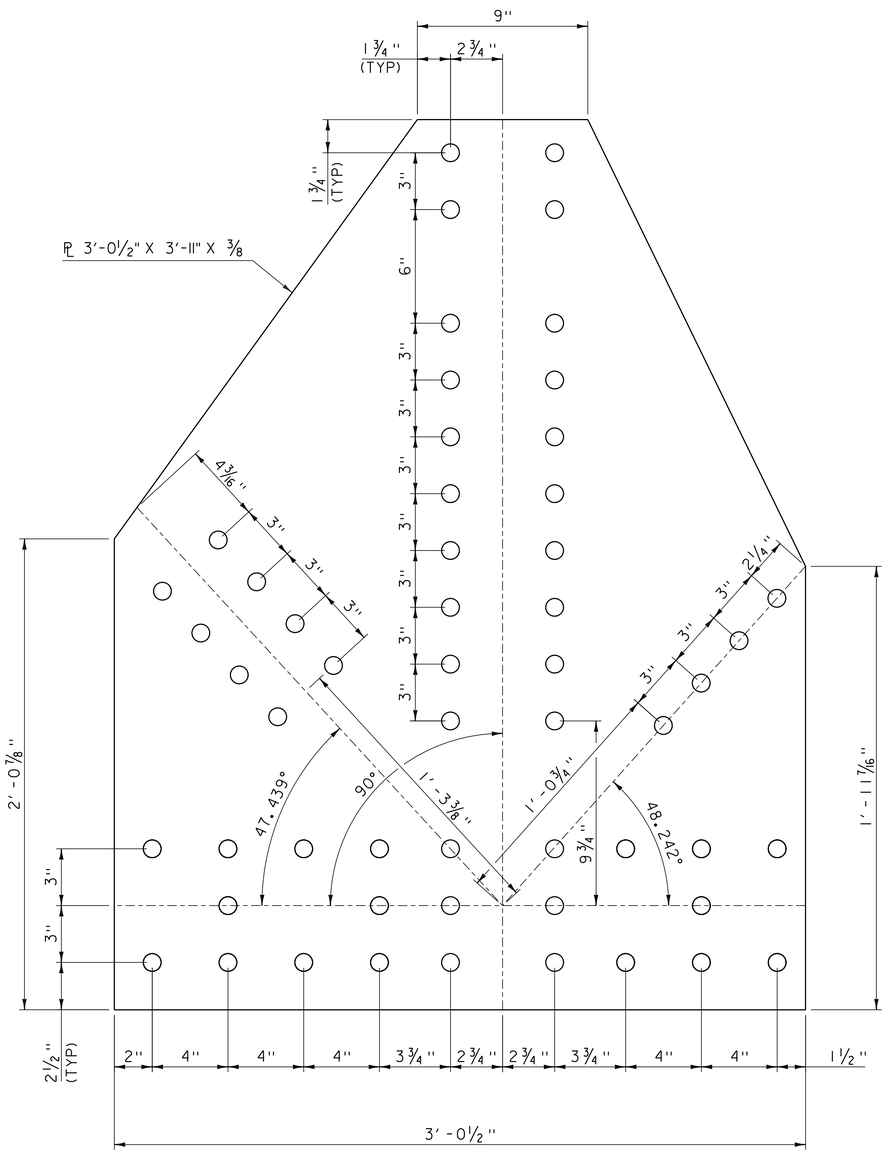

GUSSET PLATE 2f

SCALE 1/2" = 1'-0"

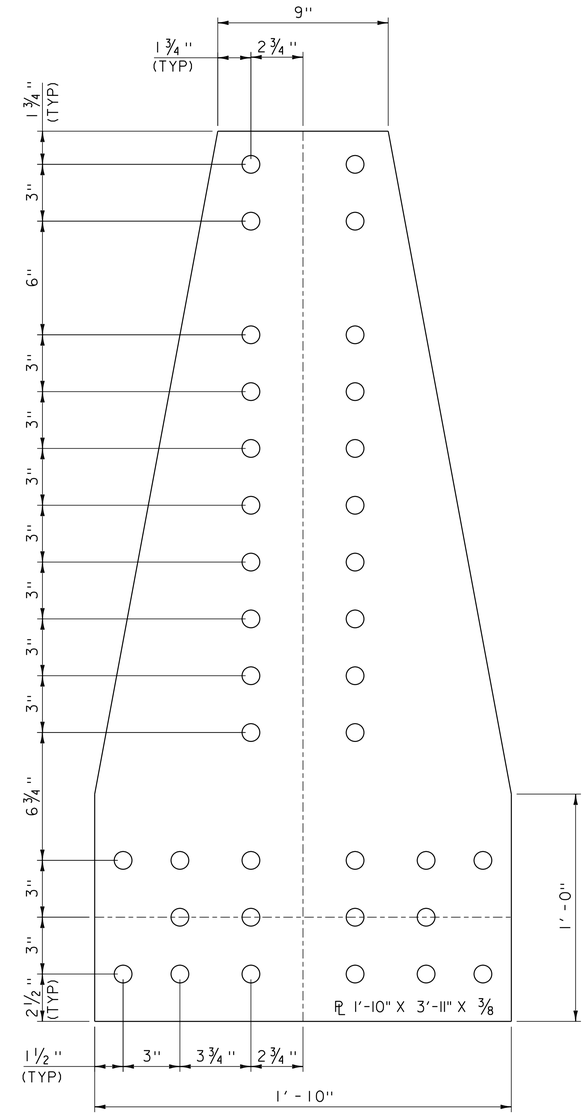

GUSSET PLATE 1-C

SCALE 1/2" = 1'-0"

NOTES:

1. ALL NEW GUSSET PLATES SHALL BE DESIGNATED FCM (FRACTURE CRITICAL MEMBERS).

REVISION	DATE	BY	DESCRIPTION
1	11/27/2017	VAOT	MODIFIED FCM NOTE

PROJECT NAME: RICHFORD-SUTTON, PQ
PROJECT NUMBER: BHF 0814(1)

FILE NAME: s10c222sup.dgn
PROJECT LEADER: C. CARLSON
DESIGNED BY: C. BURRALL
GUSSET PLATE DETAILS 2

PLOT DATE: 21-NOV-2017
DRAWN BY: G. ROKES
CHECKED BY: C. BURRALL
SHEET 38 OF 87

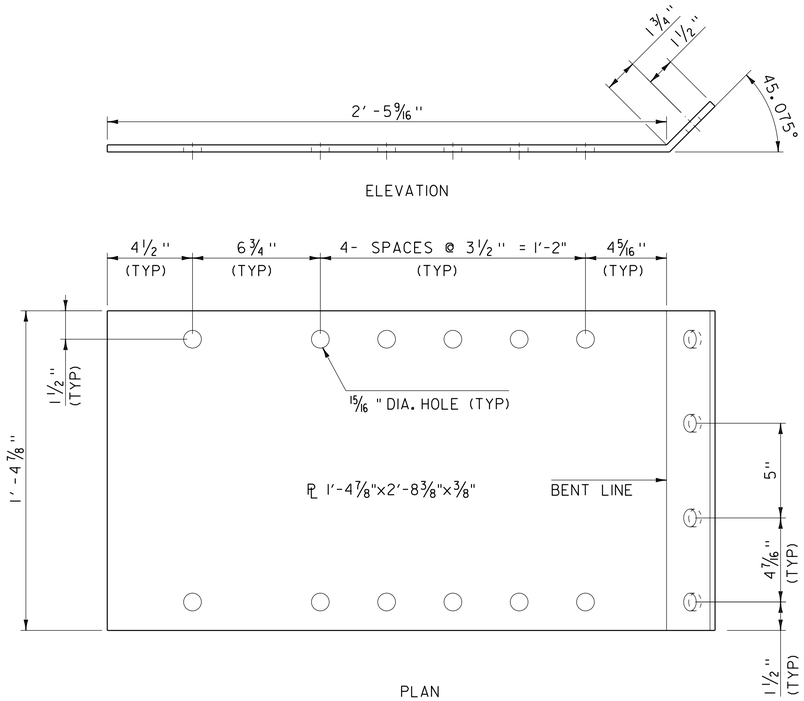

COVER PLATE (lan-1)

SCALE 3/4" = 1'-0"

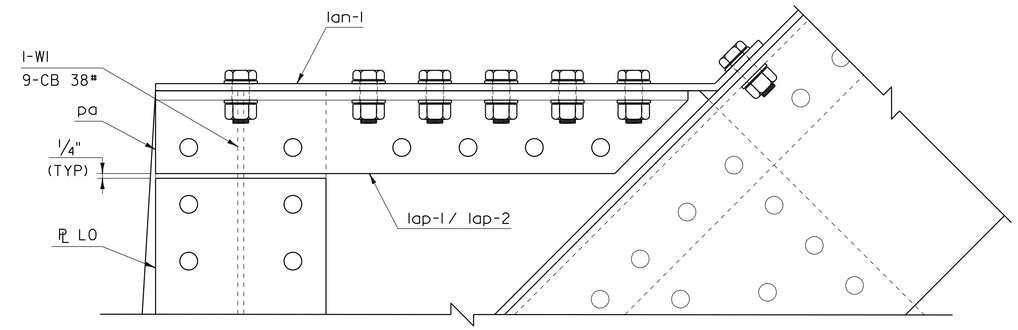

COVER PLATE ASSEMBLY (PIER)

SCALE 3/4" = 1'-0"

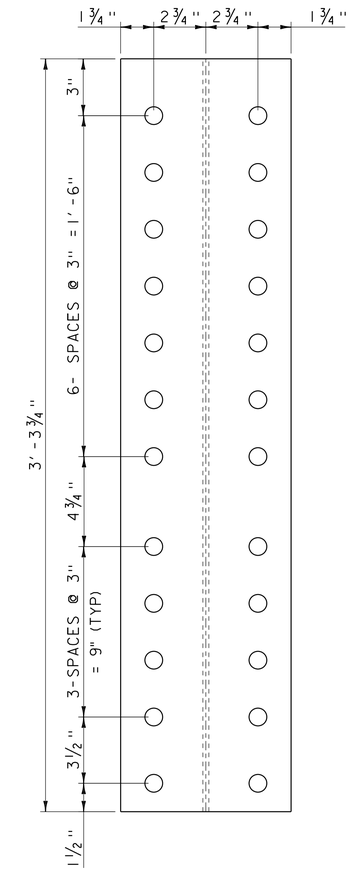

I-WI (9-CB 38#)

SCALE 3/4" = 1'-0"

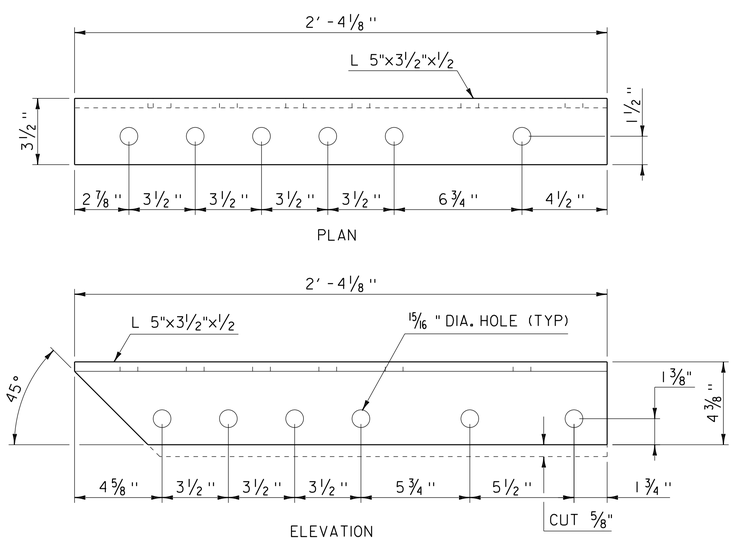

BRACKET (lap-1)

SCALE 3/4" = 1'-0"

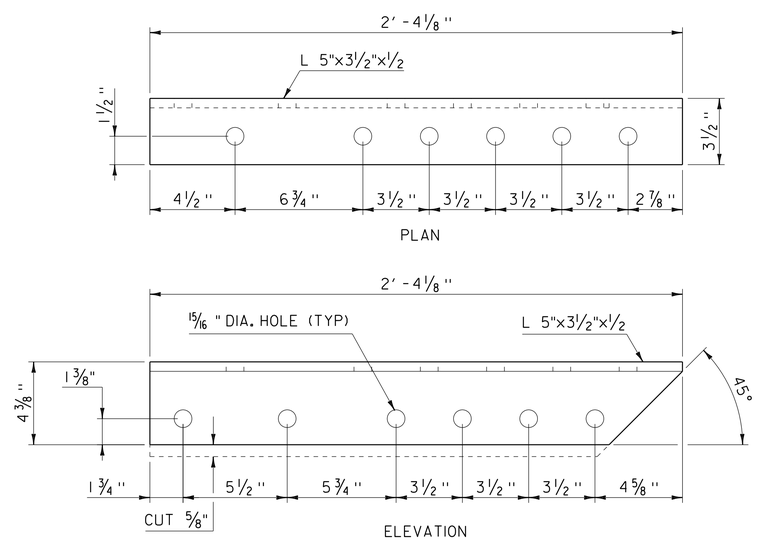

BRACKET (lap-2)

SCALE 3/4" = 1'-0"

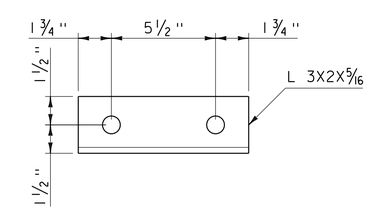

BEARING ANCHOR BRACKET (Sa)

SCALE 3/4" = 1'-0"

PROJECT NAME: RICHFORD-SUTTON, PQ	
PROJECT NUMBER: BHF 0814(1)	
FILE NAME: sl0c222sup.dgn	PLOT DATE: 26-SEP-2017
PROJECT LEADER: C. CARLSON	DRAWN BY: G. ROKES
DESIGNED BY: C. BURRALL	CHECKED BY: C. BURRALL
PIER COVER PLATE DETAILS	SHEET 39 OF 87

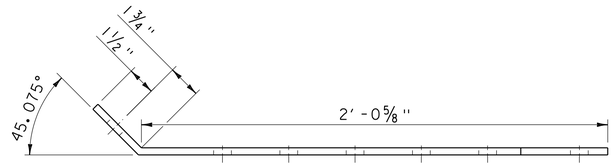

ELEVATION

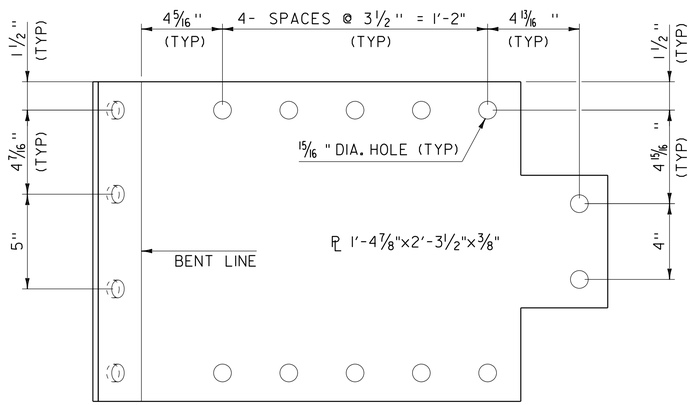

PLAN

COVER PLATE (lan-2)

SCALE 3/4" = 1'-0"

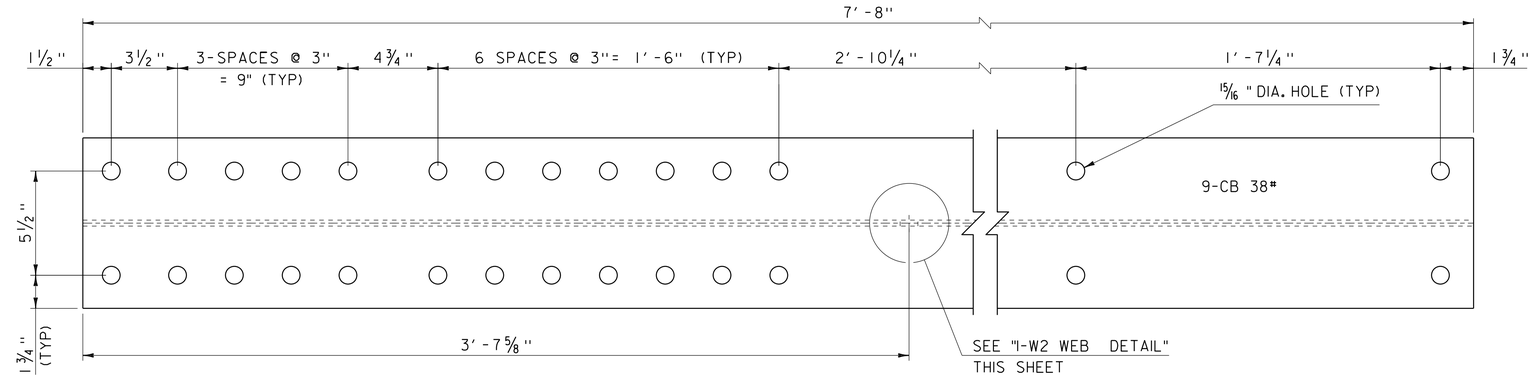

I-W2 (ABUTMENT #2)

SCALE 3/4" = 1'-0"

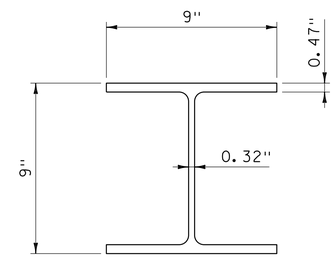

9-CB 38#

SCALE 3/4" = 1'-0"

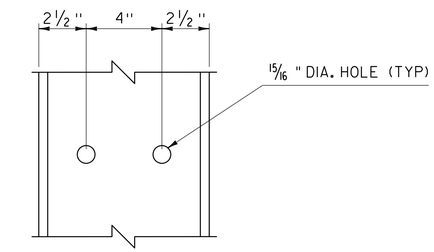

I-W2 WEB DETAIL

SCALE 3/4" = 1'-0"

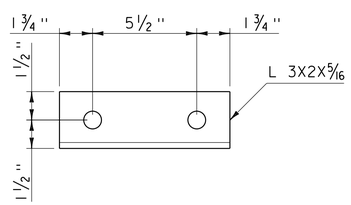

BEARING ANCHOR BRACKET (Sa)

SCALE 3/4" = 1'-0"

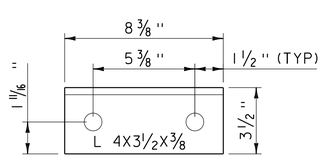

4ak

SCALE 3/4" = 1'-0"

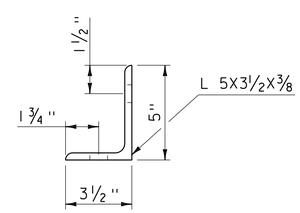

ELEVATION

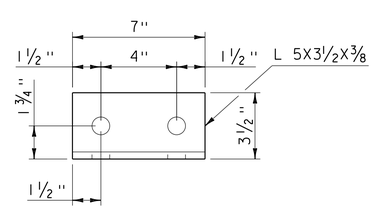

PLAN

BRACKET (lap-3)

SCALE 3/4" = 1'-0"

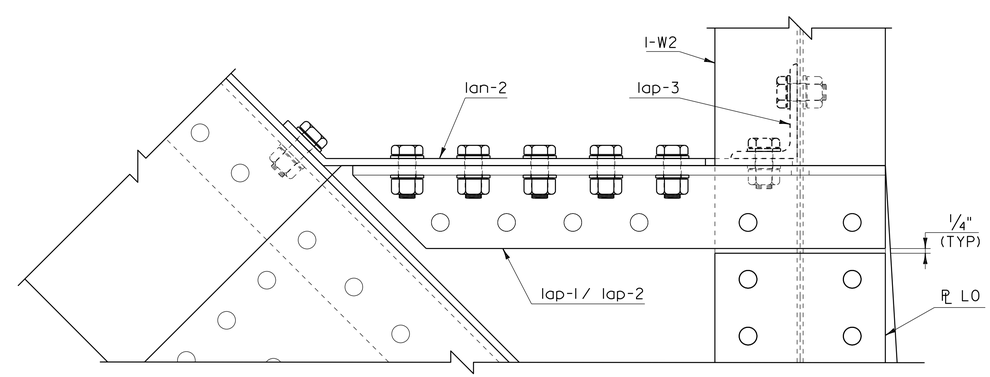

COVER PLATE ASSEMBLY (ABUT #2)

SCALE 3/4" = 1'-0"

PROJECT NAME: RICHFORD-SUTTON, PQ	
PROJECT NUMBER: BHF 0814(1)	
FILE NAME: s10c222sup.dgn	PLOT DATE: 26-SEP-2017
PROJECT LEADER: C. CARLSON	DRAWN BY: G. ROKES
DESIGNED BY: C. BURRALL	CHECKED BY: C. BURRALL
ABUTMENT #2 COVER PLATE DETAILS	SHEET 40 OF 87

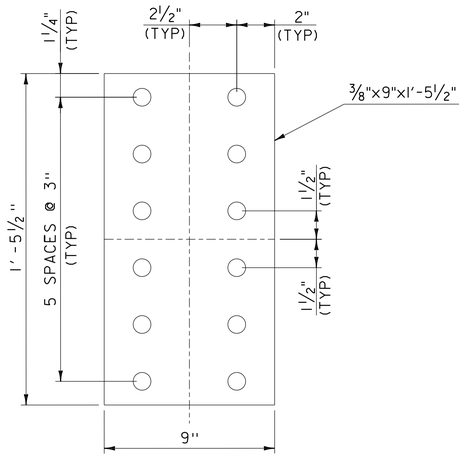

FLANGE SPLICE PLATE EXTERIOR PL1

SCALE ¾" = 1'-0"

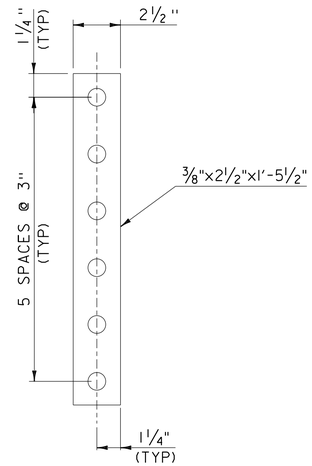

FLANGE SPLICE PLATE INTERIOR PL2

SCALE ¾" = 1'-0"

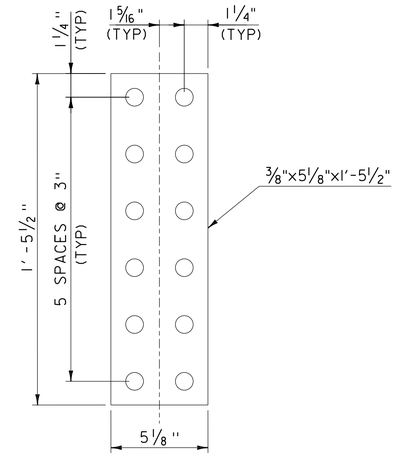

WEB SPLICE PLATE PL3

SCALE ¾" = 1'-0"

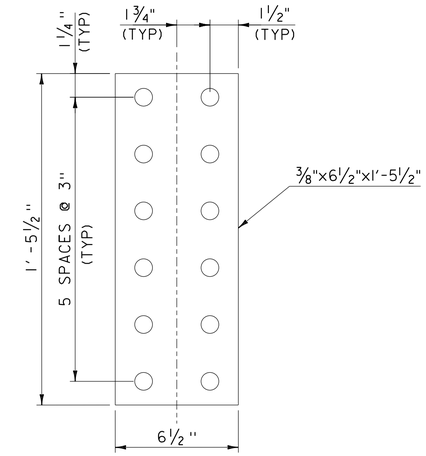

FLANGE SPLICE PLATE EXTERIOR PL4

SCALE ¾" = 1'-0"

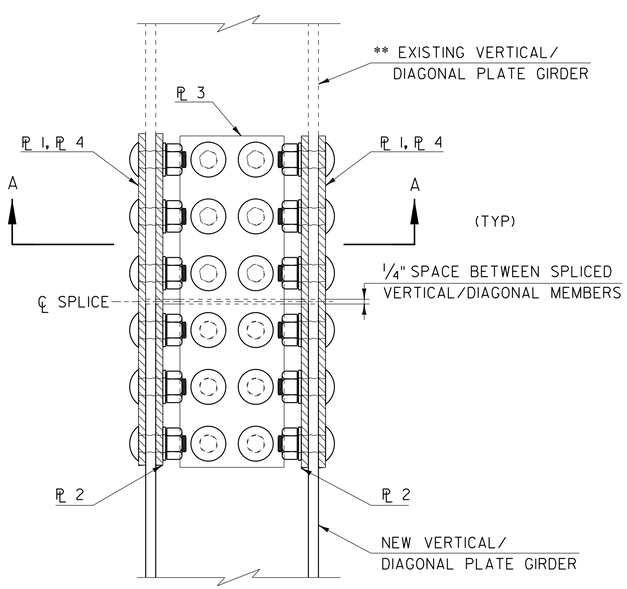

SPLICE PLATE DETAIL

(AT P1, P2, P3, D1, AND D2)
SCALE ¾" = 1'-0"

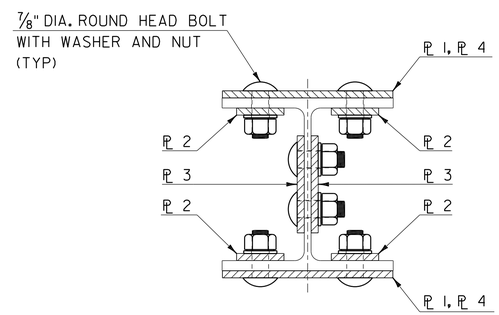

SECTION A-A

SCALE ¾" = 1'-0"

SPLICE NOTES:

1. FAYING SURFACES OF BOLTED PARTS SHALL BE CLASS B IN ACCORDANCE WITH STANDARD SPECIFICATION SECTION 506.
2. SPLICE PLATES SHALL BE CVN TESTED IN ACCORDANCE WITH STANDARD SPECIFICATION SECTION 506.
3. BOLTED CONNECTIONS SHALL BE DETAILED WITH THREADS EXCLUDED FROM THE SHEAR PLANES.
4. BOLTED SPLICE CONNECTION SHALL BE MADE WITH TENSION CONTROL BOLT ASSEMBLIES WITH 7/8" DIAMETER ROUND HEAD BOLTS MEETING REQUIREMENTS OF ASTM F1852 TYPE I AND STANDARD SPECIFICATION SUBSECTION 714.13.
5. ALL NEW VERTICALS AND DIAGONALS SHALL BE PLATE GIRDERS MATCHING THE DIMENSIONS OF THE EXISTING MEMBER AS CLOSELY AS POSSIBLE.

	** EXISTING MEMBERS TO BE SPLICED				
	P1 (CB9 38#)	P2 (CB9 38#)	P3 (CB9 38#)	D1 (CB9 43#)	D2 (CB9 29#)
SPLICE PLATES	PL1, PL2, PL3	PL1, PL2, PL3	PL1, PL2, PL3	PL1, PL2, PL3	PL4, PL2, PL3

PROJECT NAME: RICHFORD-SUTTON, PQ
PROJECT NUMBER: BHF 0814(1)

FILE NAME: s10c222sup.dgn
PROJECT LEADER: C. CARLSON
DESIGNED BY: C. BURRALL
SPLICE PLATE DETAILS

PLOT DATE: 26-SEP-2017
DRAWN BY: G. ROKES
CHECKED BY: C. BURRALL
SHEET 41 OF 87

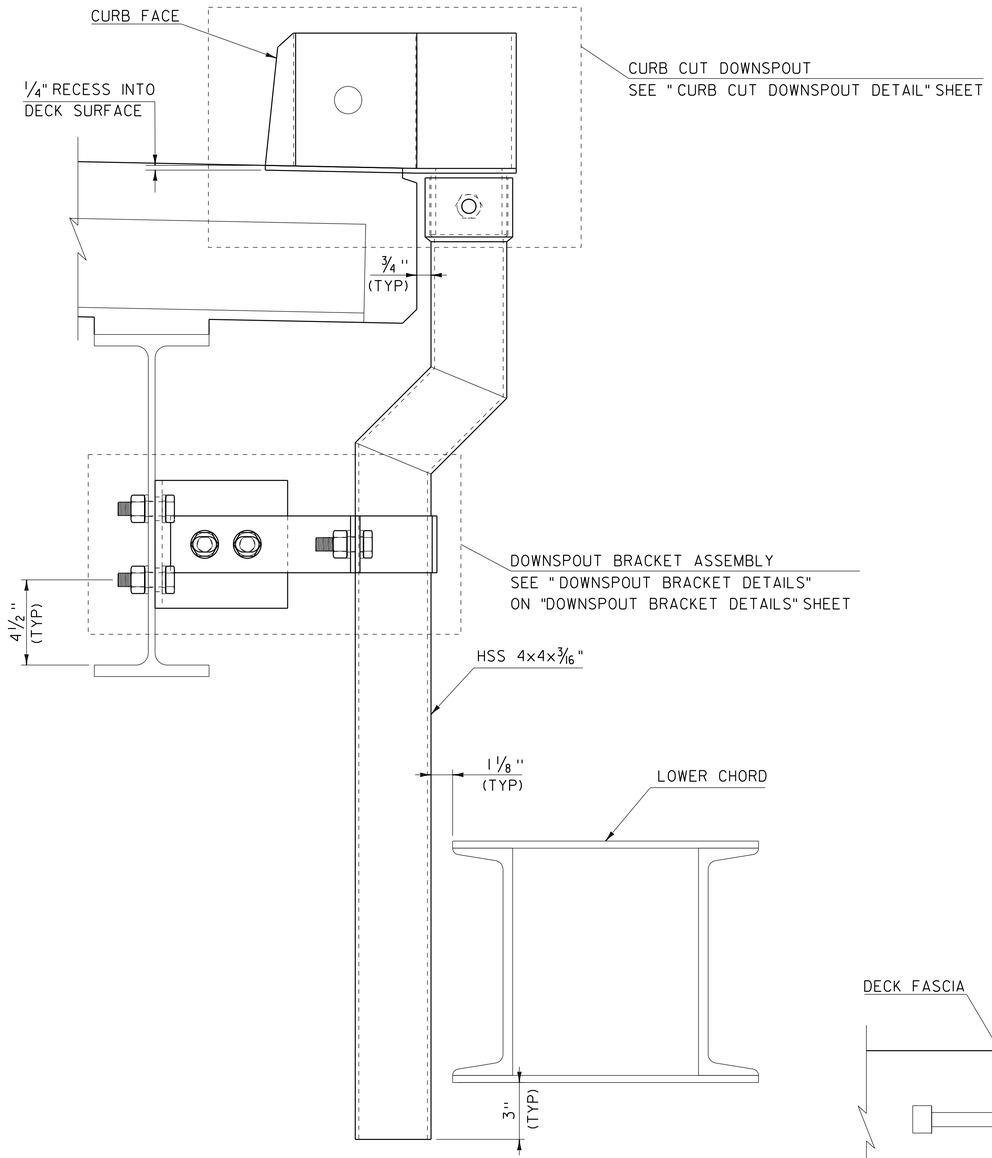

CURB CUT DOWNSPOUT SECTION

SCALE 3/4" = 1'-0"

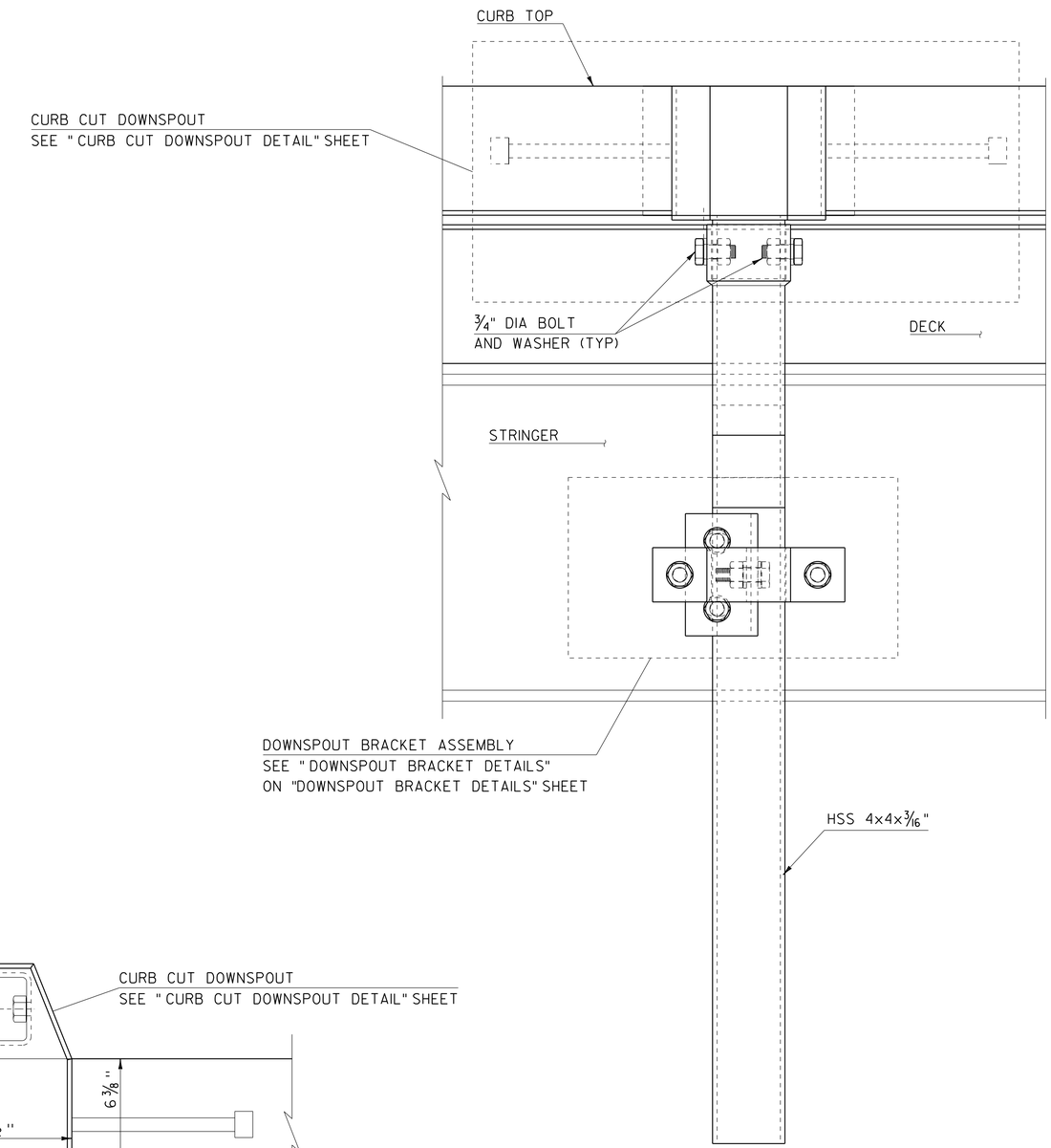

CURB CUT DOWNSPOUT ELEVATION

SCALE 3/4" = 1'-0"

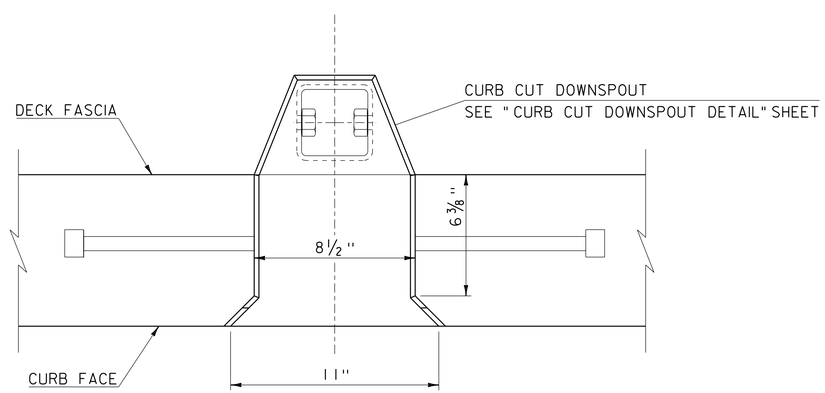

CURB CUT DOWNSPOUT PLAN

SCALE 3/4" = 1'-0"

PROJECT NAME: RICHFORD-SUTTON, PQ	
PROJECT NUMBER: BHF 0814(1)	
FILE NAME: s10c222sup.dgn	PLOT DATE: 26-SEP-2017
PROJECT LEADER: C. CARLSON	DRAWN BY: G. ROKES
DESIGNED BY: C. BURRALL	CHECKED BY: C. BURRALL
CURB CUT DOWNSPOUT	SHEET 42 OF 87

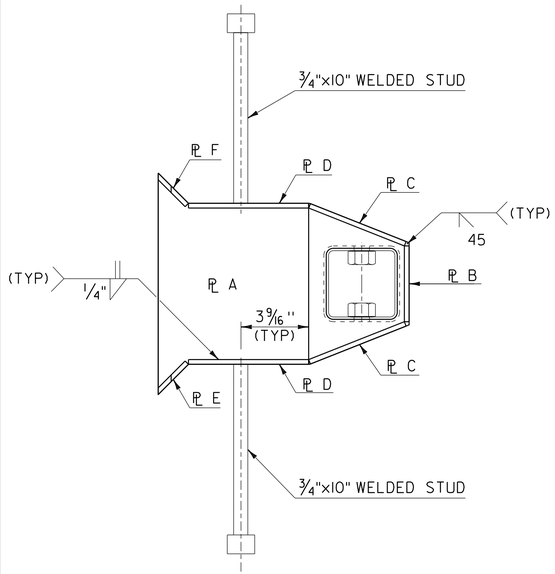

CURB CUT DOWNSPOUT DETAIL PLAN

SCALE ¾" = 1'-0"

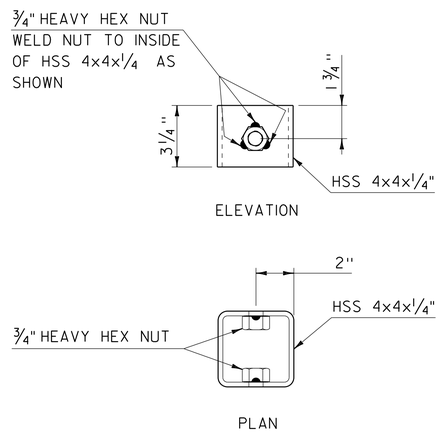

DOWNSPOUT COUPLING

SCALE ¾" = 1'-0"

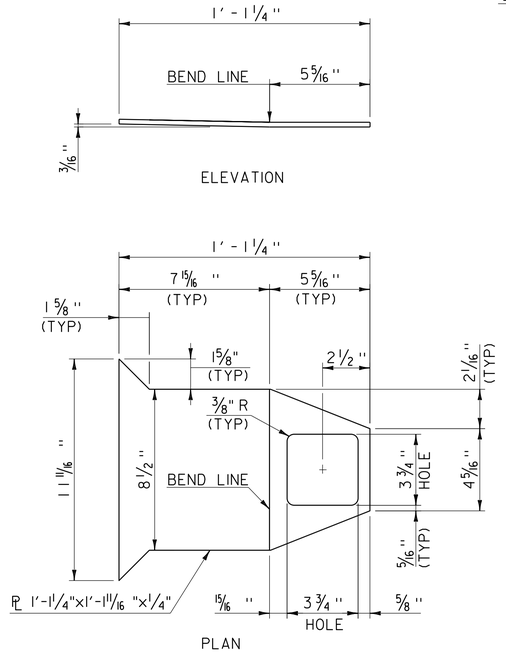

PLATE A

SCALE ¾" = 1'-0"

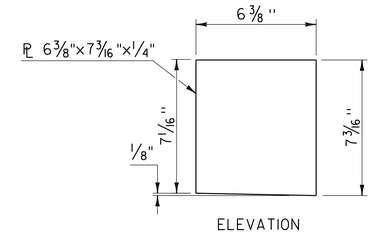

PLATE D

SCALE ¾" = 1'-0"

NOTE: ℄ H IS SIMILAR

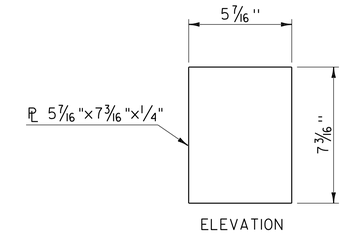

PLATE C

SCALE ¾" = 1'-0"

NOTE: ℄ G IS SIMILAR

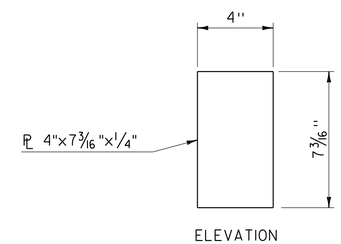

PLATE B

SCALE ¾" = 1'-0"

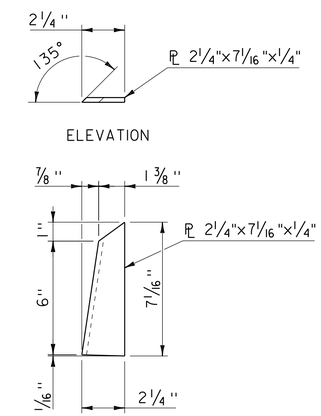

PLATE E

SCALE ¾" = 1'-0"

NOTE: ℄ F IS SIMILAR

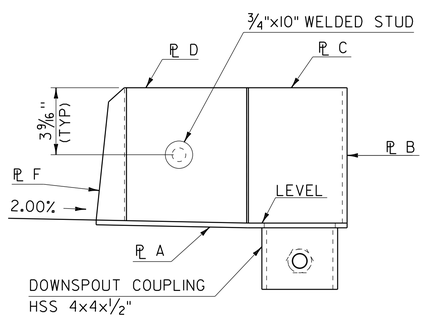

CURB CUT DOWNSPOUT DETAIL ELEVATION

SCALE ¾" = 1'-0"

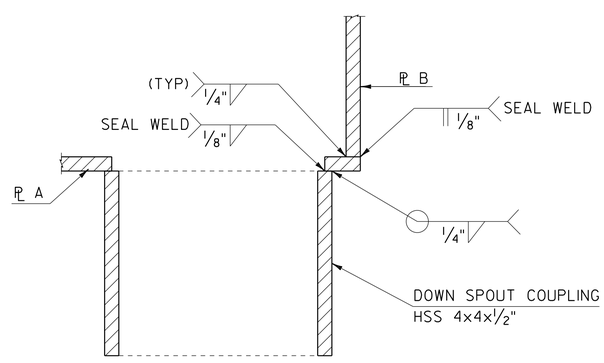

DOWNSPOUT COUPLING WELD DETAILS

NOT TO SCALE

CURB CUT DOWNSPOUT NOTES:

1. ALL MATERIALS AND INSTALLATION COSTS FOR THE CURB CUT DOWNSPOUT, INCLUDING STEEL TUBING, RELATED HARDWARE, AND ANCHOR BOLTS SHALL BE INCLUDED IN THE UNIT BID PRICE FOR ITEM 506.60 "STRUCTURAL STEEL".
2. HOLLOW STRUCTURAL STEEL TUBING SHALL CONFORM TO THE REQUIREMENTS OF STANDARD SPECIFICATION SECTION 714.11.
3. ALL PLATES, BARS, AND ANGLES SHALL CONFORM TO THE REQUIREMENTS OF STANDARD SPECIFICATION SUBSECTION 714.02.
4. DOWNSPOUTS SHALL BE GALVANIZED IN ACCORDANCE WITH STANDARD SPECIFICATION SUBSECTION 726.08.
5. ALL BOLTS AND RELATED HARDWARE SHALL CONFORM TO THE REQUIREMENTS OF SUBSECTION 714.04 AND SHALL BE GALVANIZED IN ACCORDANCE WITH SUBSECTION 726.08.
6. ALL REQUIRED WELDS FOR DOWNSPOUTS SHALL BE DETAILED ON FABRICATION DRAWINGS WHICH SHALL ALSO INCLUDE ALL APPLICABLE WELDING PROCEDURES.
7. AFTER ALL PAVING AND CONRETE OPERATIONS THE SCUPPERS AND DOWNSPOUTS SHALL BE CLEANED OF ALL CONTAMINATION BY FLUSHING.

PROJECT NAME: RICHFORD-SUTTON, PQ	
PROJECT NUMBER: BHF 0814(1)	
FILE NAME: s10c222sup.dgn	PLOT DATE: 26-SEP-2017
PROJECT LEADER: C. CARLSON	DRAWN BY: G. ROKES
DESIGNED BY: C. BURRALL	CHECKED BY: C. BURRALL
CURB CUT DOWNSPOUT DETAIL	SHEET 43 OF 87

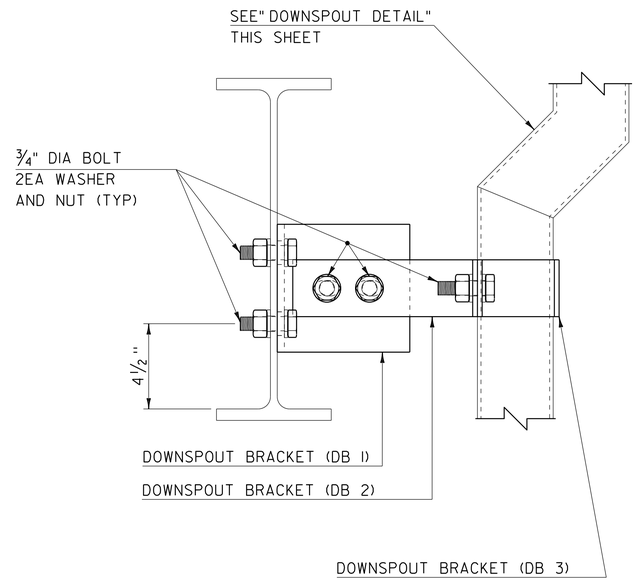

DOWNSPOUT BRACKET ASSEMBLY

SCALE 3/4" = 1'-0"

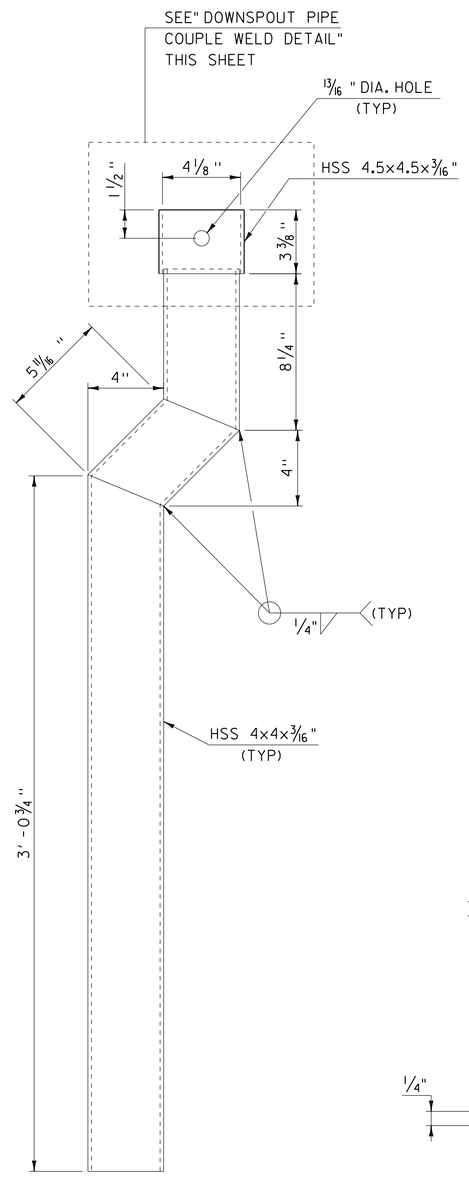

DOWNSPOUT DETAIL

SCALE 3/4" = 1'-0"

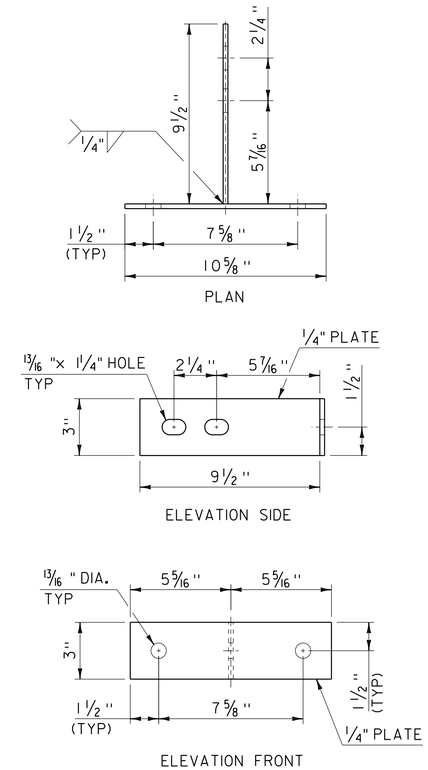

DOWNSPOUT BRACKET (DB 1)

SCALE 3/4" = 1'-0"

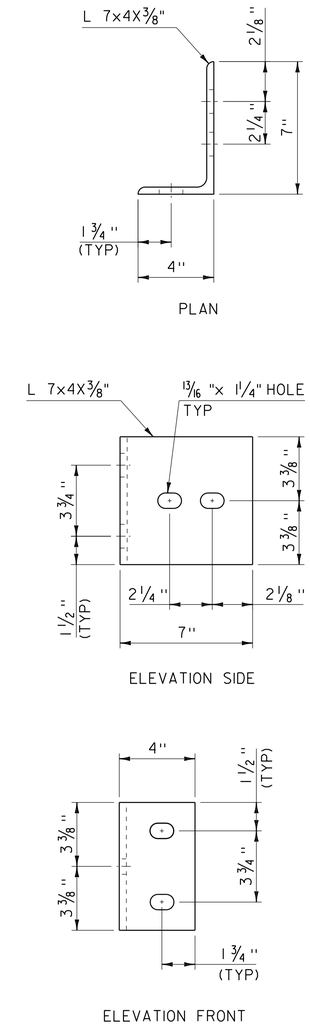

DOWNSPOUT BRACKET (DB 2)

SCALE 3/4" = 1'-0"

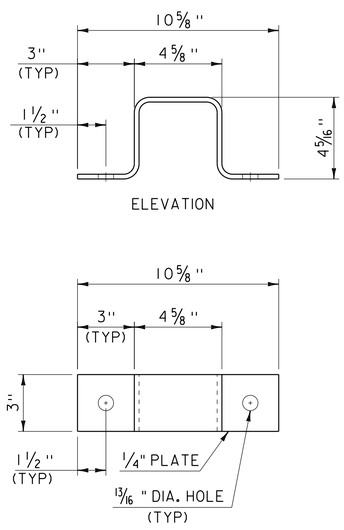

DOWNSPOUT BRACKET (DB 3)

SCALE 3/4" = 1'-0"

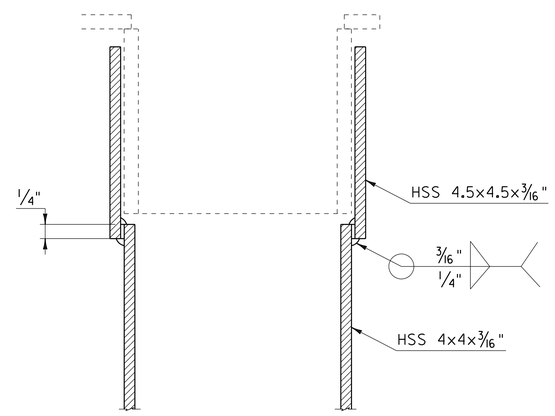

DOWNSPOUT PIPE COUPLE WELD DETAIL

NOT TO SCALE

PROJECT NAME: RICHFORD-SUTTON, PQ	
PROJECT NUMBER: BHF 0814(1)	
FILE NAME: s10c222sup.dgn	PLOT DATE: 26-SEP-2017
PROJECT LEADER: C. CARLSON	DRAWN BY: G. ROKES
DESIGNED BY: C. BURRALL	CHECKED BY: C. BURRALL
DOWNSPOUT BRACKET DETAIL	SHEET 44 OF 87

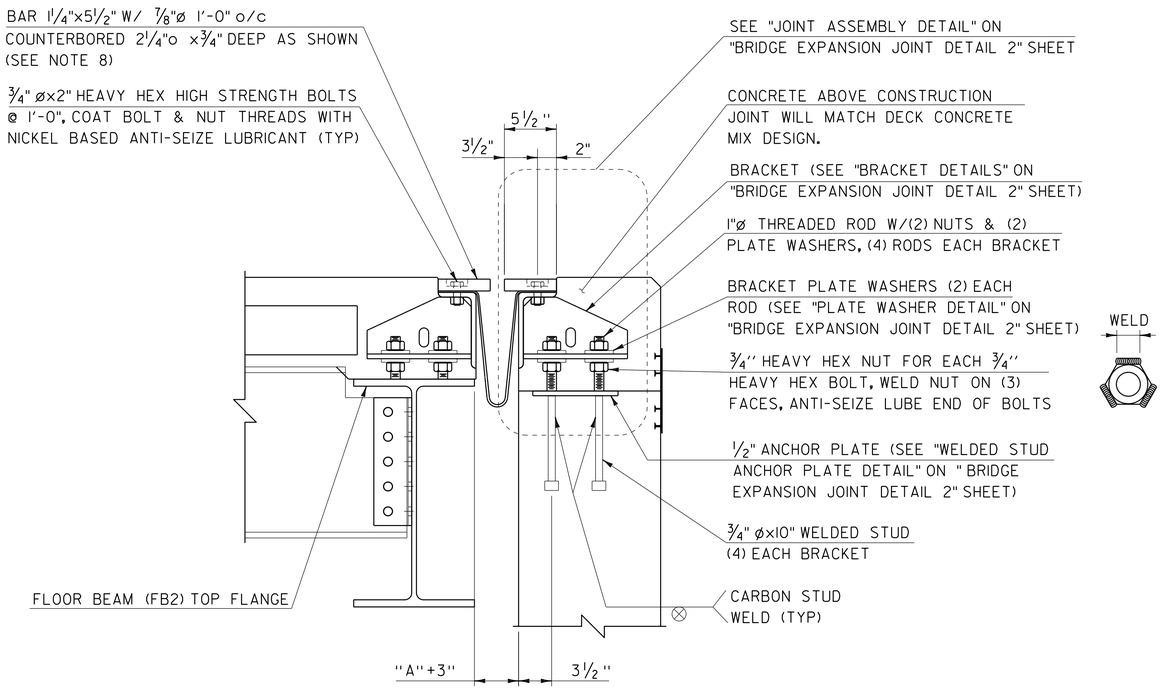

TYPICAL SECTION AT BRACKETS

SCALE 1½" = 1'-0"

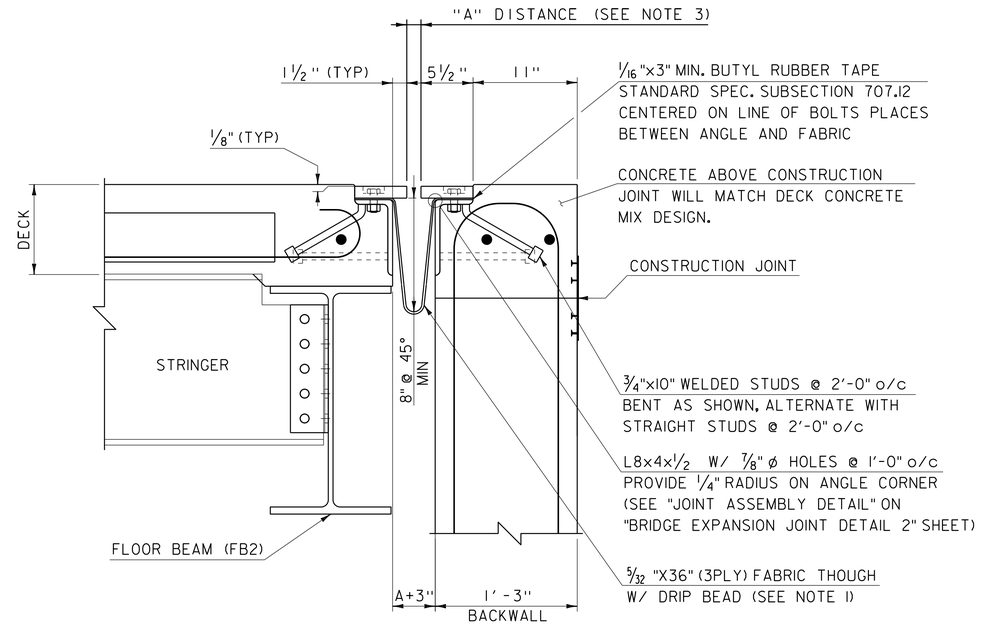

TYPICAL SECTION BETWEEN BRACKETS

SCALE 1½" = 1'-0"

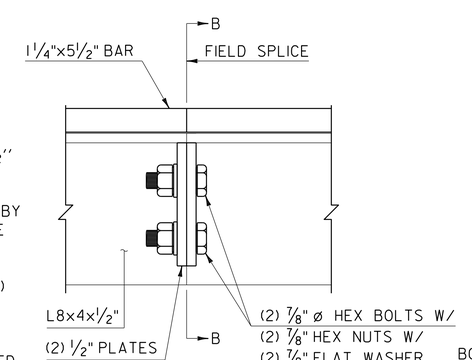

FIELD SPLICE DETAIL

SCALE 3" = 1'-0"

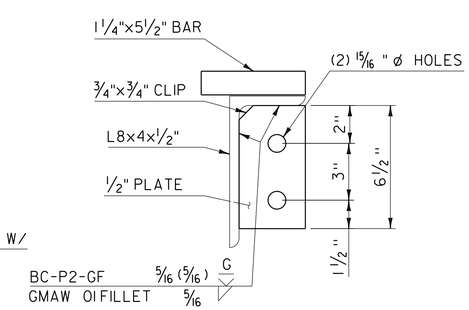

SECTION "B-B"

SCALE 3" = 1'-0"

NOTES FOR ITEM 516.11 "BRIDGE EXPANSION JOINT, VERMONT"

1. FABRIC TROUGH SHALL BE THOROUGHLY CLEANED AND FLUSHED AFTER PAVING OPERATION. A DRIP BEAD OF 1/4''x7'' STRIP OF PREFORMED FABRIC MATERIAL SHALL BE CEMENTED TO THE BOTTOM OF THE FABRIC TROUGH USING AN ADHESIVE APPROVED BY THE MANUFACTURER. THE DRIP BEAD SHALL BE APPLIED 1'' FROM THE DOWNSPOUT END OF THE TROUGH. PREFORMED FABRIC MATERIAL SHALL BE CONTINUOUS FOR THE FULL LENGTH OF THE JOINT.

2. THE EXPANSION DEVICE SHALL BE COVERED TO PROTECT THE FINISH DURING PLACING OF BRIDGE DECK CONCRETE.

3. SEE "JOINT GAP DIMENSION TABLE" FOR DISTANCE "A" ON "BRIDGE EXPANSION JOINT 2" SHEET FOR VALUES OF TEMPERATURE RANGE PROVIDED.

4. THE BRACKET MUST BE LOCATED SUCH THAT THE THREADED RODS ARE NOT LESS THAN 1½" FROM FLOOR BEAM FLANGE SIDES.

5. ALL STEEL COMPONENTS SHALL BE GALVANIZED OR METALIZED AND MEET THE REQUIREMENTS OF SUBSECTION 516.02. PRIOR TO GALVANIZING OR METALIZING, ALL CORNERS AND EDGES OF STEEL PLATES, SHAPES, ETC., SHALL BE GROUND TO A 1/16'' INCH RADIUS. THREADED RODS SHALL CONFORM TO THE REQUIREMENTS OF 714.04. THE "WELDED STUD ANCHOR PLATE" AND WELDED STUDS MAY BE SUPPLIED WITHOUT GALVANIZING OR METALIZING.

6. THE 4''x8''x1/2'' ANGLES MAY BE FURNISHED AS ONE CONTINUOUS PIECE OR SPLICED AS SHOWN IN THE FIELD SPLICE DETAIL WHEN SPECIFIED. THE 1¼''x5 ½'' BARS EACH SIDE OF THE JOINT SHALL BE PROVIDED IN TWO EQUAL LENGTHS.

7. PROJECTING THREADS OF THE 3/4'' Ø BOLTS IN THE JOINT SHALL BE GREASED BY THE CONTRACTOR PRIOR TO PLACING ADJACENT CONCRETE. THIS WILL FACILITATE BOLT REMOVAL IF REQUIRED IN THE FUTURE.

8. FILL COUNTERBORED HOLES WITH HOT POURED JOINT SEALER (STD. SPEC. 707.04) AFTER BOLT INSTALLATION. PAYMENT FOR THE WORK SHALL BE INCIDENTAL TO ITEM 516.11 "BRIDGE EXPANSION JOINT, VERMONT".

9. THE EXPANSION JOINT, INCLUDING THE FABRIC TROUGH, SHALL BE SHOP ASSEMBLED AND SHIPPED AS ONE UNIT. IF THE EXPANSION JOINT HAS A FIELD SPLICE SPECIFIED, THE FABRIC TROUGH SHALL BE SHIPPED WITH ONE UNIT AND ASSEMBLED WITH THE SECOND UNIT PRIOR TO CONCRETE PLACEMENT.

10. TEMPORARY SHIPPING ATTACHMENTS SHALL BE ATTACHED BY BOLTING; WELDING WILL NOT BE PERMITTED.

PROJECT NAME: RICHFORD-SUTTON, PQ	
PROJECT NUMBER: BHF 0814(1)	
FILE NAME: s10c222sup.dgn	PLOT DATE: 26-SEP-2017
PROJECT LEADER: C. CARLSON	DRAWN BY: G. ROKES
DESIGNED BY: C. BURRALL	CHECKED BY: C. BURRALL
BRIDGE EXPANSION JOINT DETAIL 1	SHEET 45 OF 87

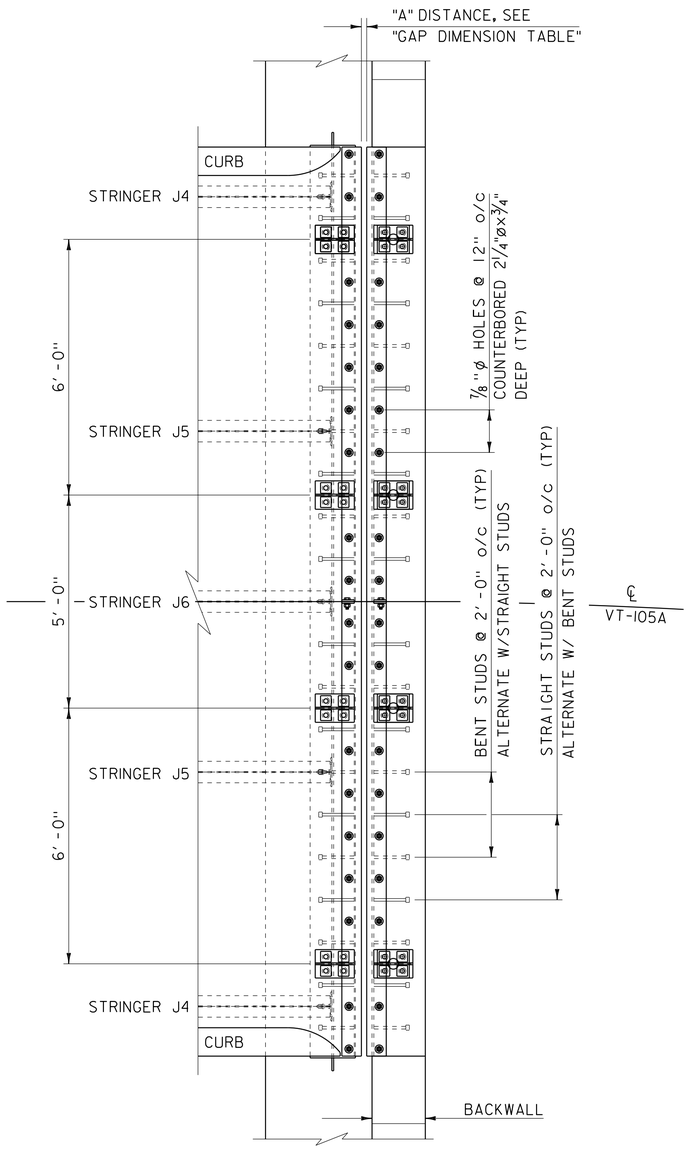

EXPANSION JOINT PLAN

SCALE 3/8" = 1'-0"

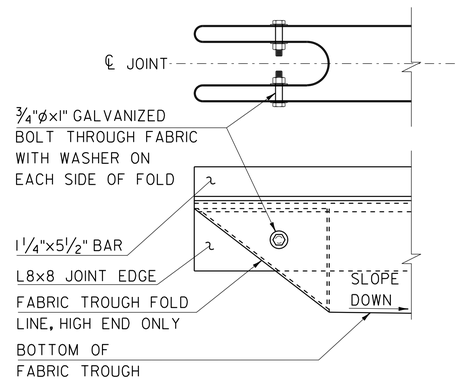

FOLDED TROUGH END DETAIL

SCALE 3" = 1'-0"

1. TROUGH SHALL BE FOLDED AT HIGH ENDS. TROUGH SHALL SLOPE AT MIN 2% DOWN TOWARD THE NEAREST DRAINAGE SPOUT HOPPER LOCATION.

2. BOLTS, NUTS AND WASHERS FOR FOLD SHALL MEET REQUIREMENTS OF SUBSECTION 714.04 AND SHALL BE GALVANIZED.

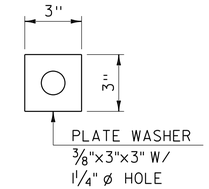

PLATE WASHER DETAIL

SCALE 3" = 1'-0"

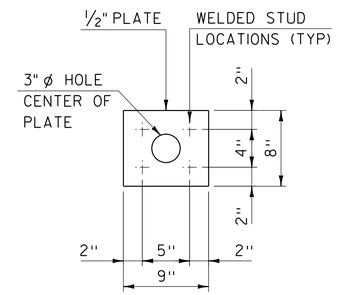

WELDED STUD ANCHOR PLATE DETAIL

SCALE 1 1/2" = 1'-0"

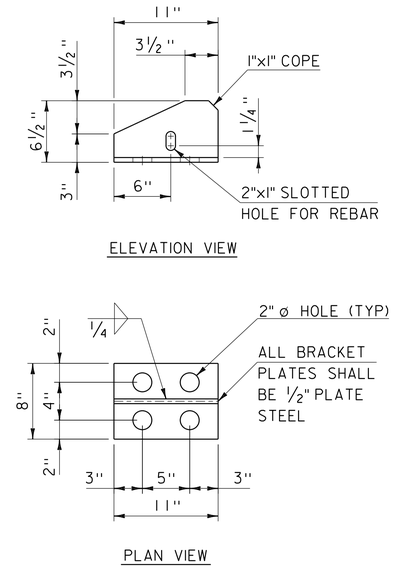

BRACKET DETAILS

SCALE 1 1/2" = 1'-0"

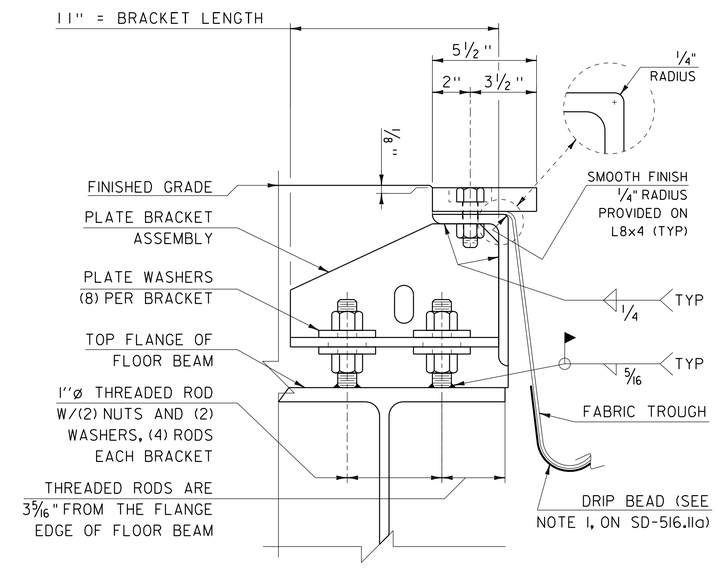

JOINT ASSEMBLY DETAIL

SCALE 3" = 1'-0"

JOINT GAP DIMENSION TABLE

Temp (°F)	"A" Distance (in)				
	Expansion Length (ft)				
	100 - 120	>120 - 140	>140 - 160	>160 - 180	>180 - 200
0	1 5/8	1 13/16	1 7/8	1 15/16	2 1/8
15	1 1/2	1 5/8	1 11/16	1 3/4	1 7/8
30	1 5/16	1 1/2	1 1/2	1 1/2	1 5/8
45	1 3/16	1 5/16	1 5/16	1 5/16	1 7/16
60	1 1/16	1 1/8	1 1/8	1 1/16	1 3/16
75	15/16	1	15/16	7/8	15/16
90	3/4	13/16	3/4	11/16	11/16
105	5/8	11/16	9/16	7/16	1/2

1) Expansion Length: Length of span, from Expansion Joint to nearest Fixed Bearing.
2) "A" Distance: measured distance during joint placement.
3) Temp: Approximate temperature of steel during joint placement.

PROJECT NAME: RICHFORD-SUTTON, PQ
PROJECT NUMBER: BHF 0814(1)

FILE NAME: s10c222sup.dgn
PROJECT LEADER: C. CARLSON
DESIGNED BY: C. BURRALL
BRIDGE EXPANSION JOINT DETAIL 2
PLOT DATE: 26-SEP-2017
DRAWN BY: G. ROKES
CHECKED BY: C. BURRALL
SHEET 46 OF 87

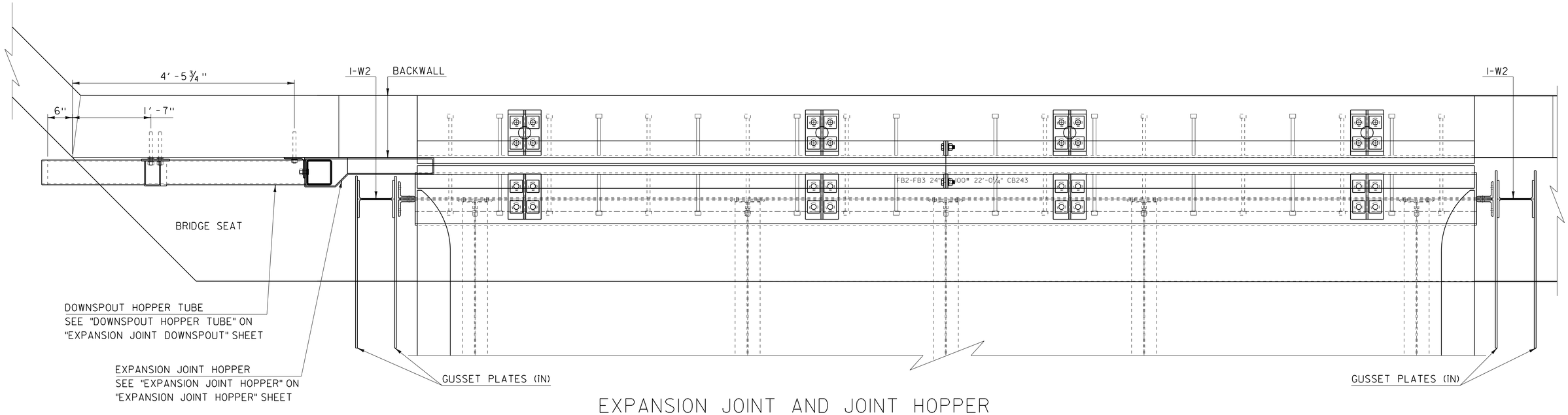

EXPANSION JOINT AND JOINT HOPPER PLAN

SCALE 1" = 1'-0"

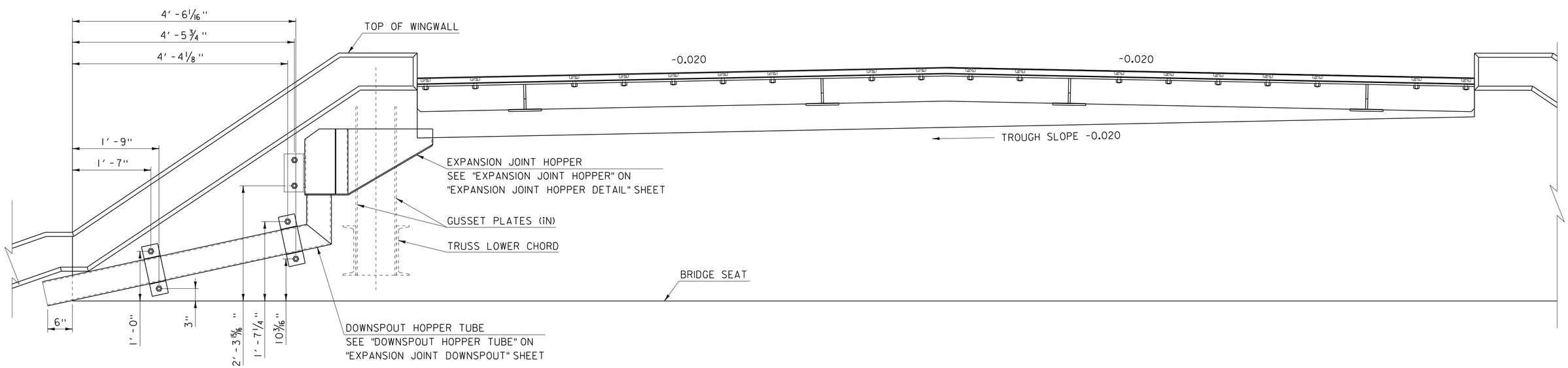

EXPANSION JOINT AND JOINT HOPPER ELEVATION

SCALE 1" = 1'-0"

PROJECT NAME: RICHFORD-SUTTON, PQ	
PROJECT NUMBER: BHF 0814(1)	
FILE NAME: s10c222sup.dgn	PLOT DATE: 26-SEP-2017
PROJECT LEADER: C. CARLSON	DRAWN BY: G. ROKES
DESIGNED BY: C. BURRALL	CHECKED BY: C. BURRALL
EXPANSION JOINT TROUGH AND HOPPER	SHEET 47 OF 87

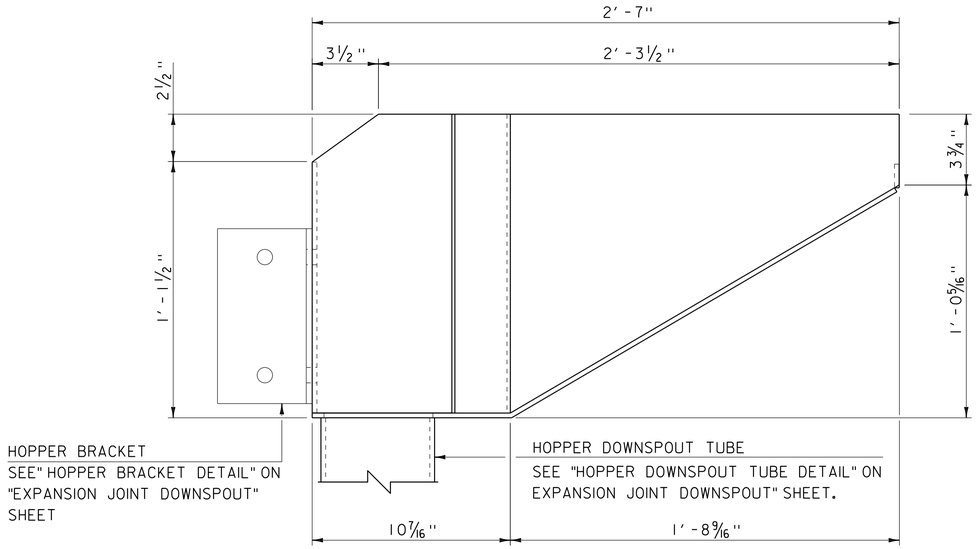

ELEVATION

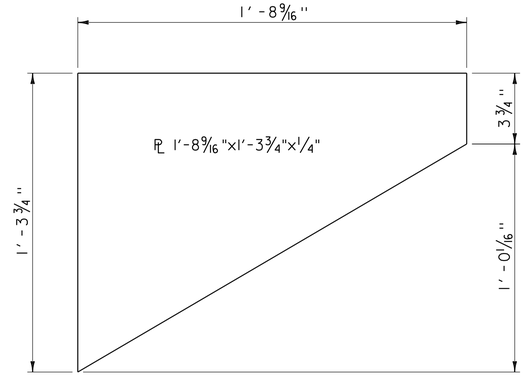

PLATE DH3

SCALE 3/4" = 1'-0"

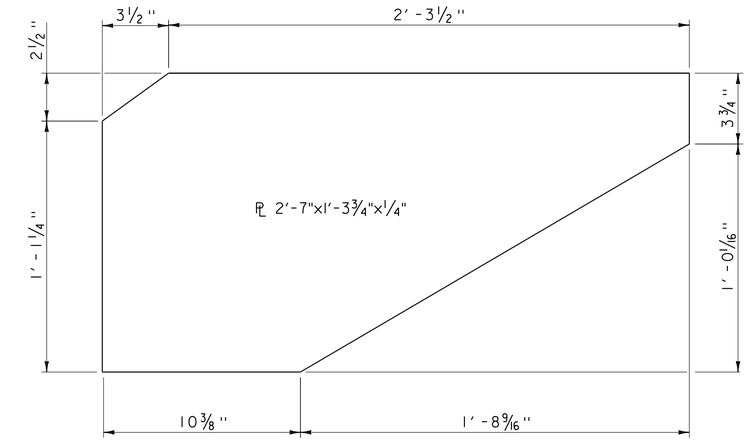

PLATE DH2

SCALE 3/4" = 1'-0"

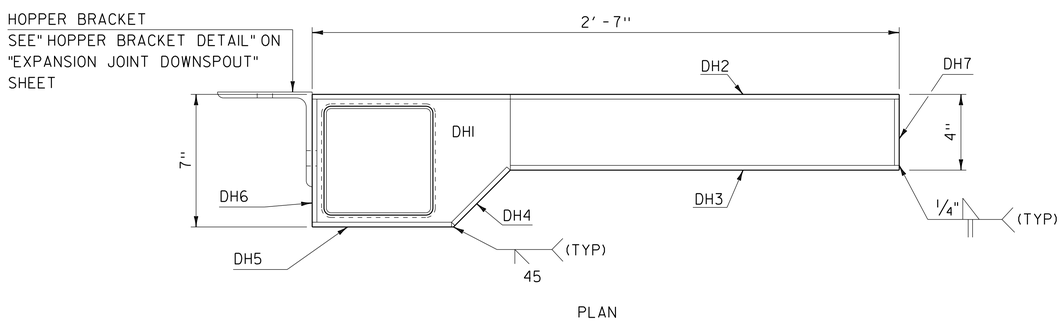

PLAN

EXPANSION JOINT HOPPER

SCALE 3/4" = 1'-0"

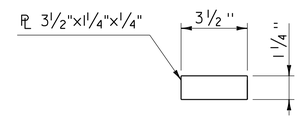

PLATE DH7

SCALE 3/4" = 1'-0"

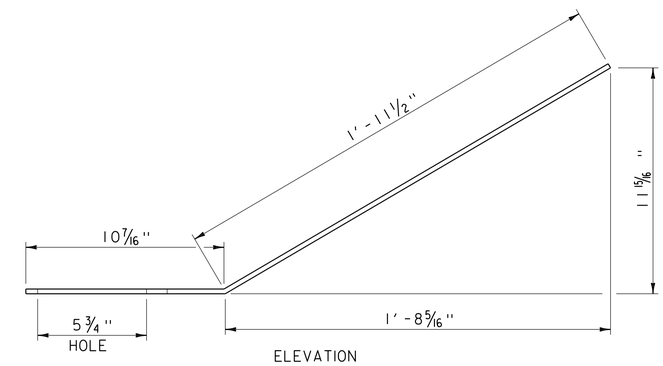

ELEVATION

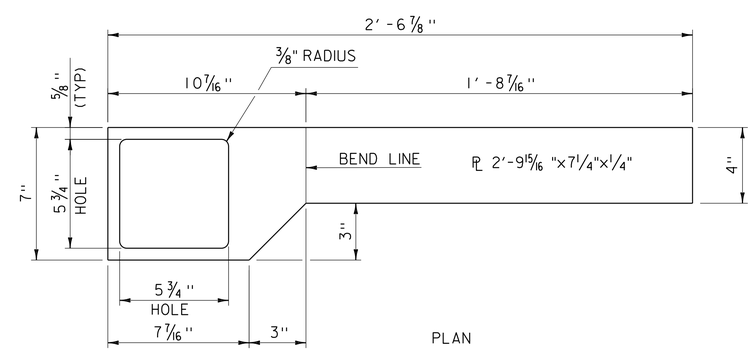

PLAN

PLATE DHI

SCALE 3/4" = 1'-0"

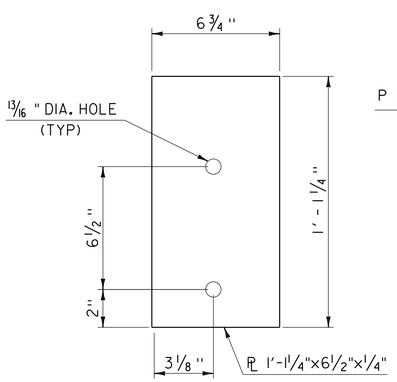

PLATE DH6

SCALE 3/4" = 1'-0"

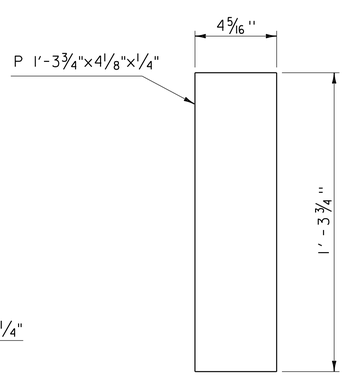

PLATE DH4

SCALE 3/4" = 1'-0"

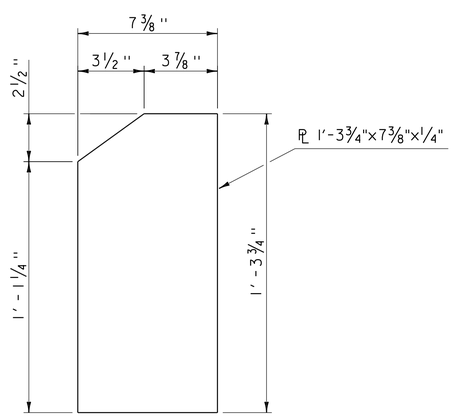

PLATE DH5

SCALE 3/4" = 1'-0"

LEGEND

DH = DOWNSPOUT HOPPER PLATE NUMBER

PROJECT NAME: RICHFORD-SUTTON, PQ	
PROJECT NUMBER: BHF 0814(1)	
FILE NAME: s10c222sup.dgn	PLOT DATE: 26-SEP-2017
PROJECT LEADER: C. CARLSON	DRAWN BY: G. ROKES
DESIGNED BY: C. BURRALL	CHECKED BY: C. BURRALL
EXPANSION JOINT HOPPER DETAIL	SHEET 48 OF 87

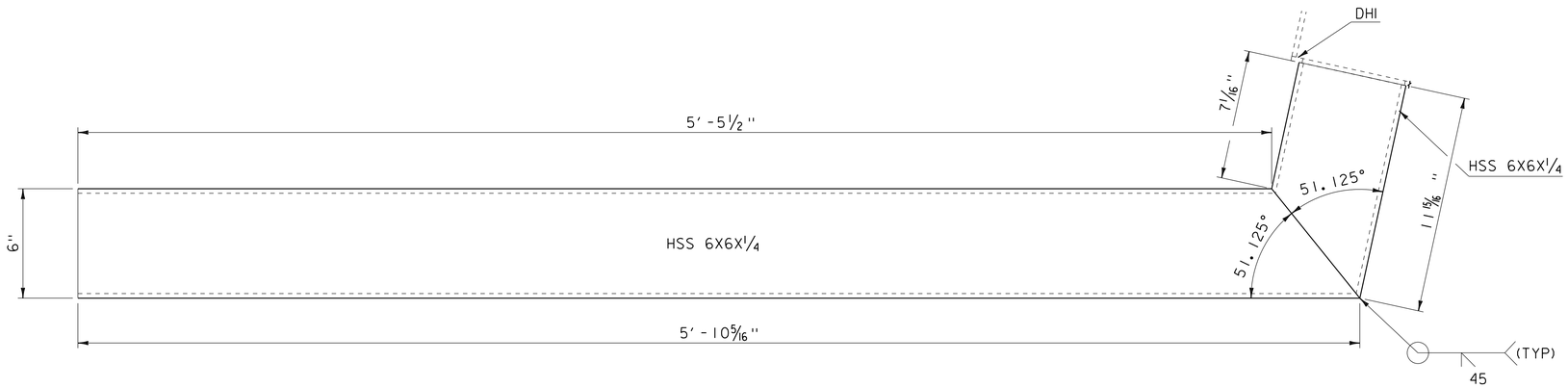

ELEVATION

HOPPER DOWNSPOUT TUBE

SCALE 3/4" = 1'-0"

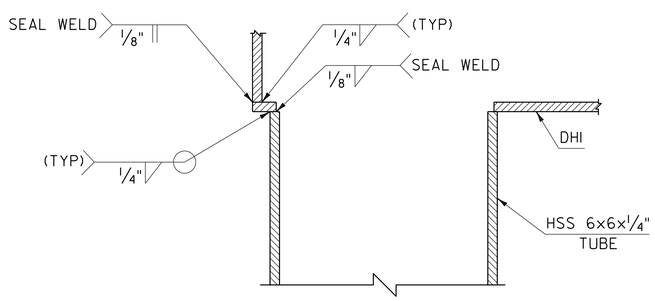

HOPPER DOWNSPOUT TUBE TO EXPANSION JOINT HOPPER DETAIL

SCALE 3/4" = 1'-0"

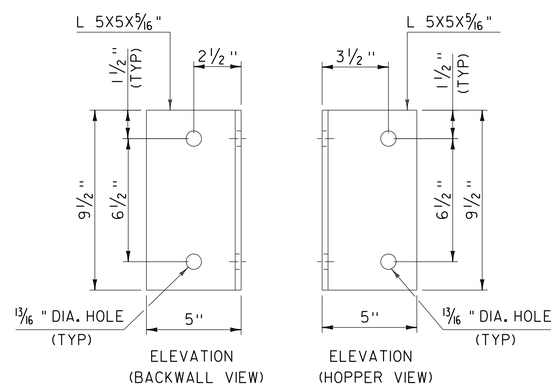

HOPPER BRACKET DETAIL

SCALE 3/4" = 1'-0"

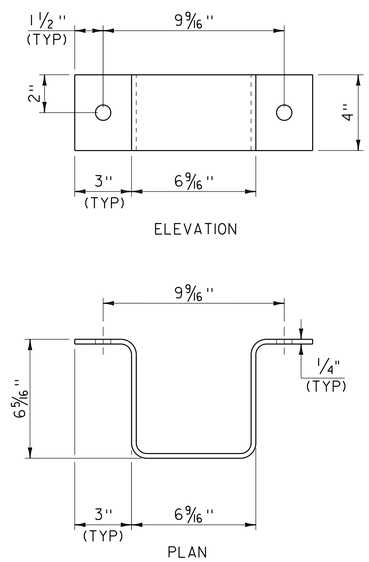

BRACKET

SCALE 3/4" = 1'-0"

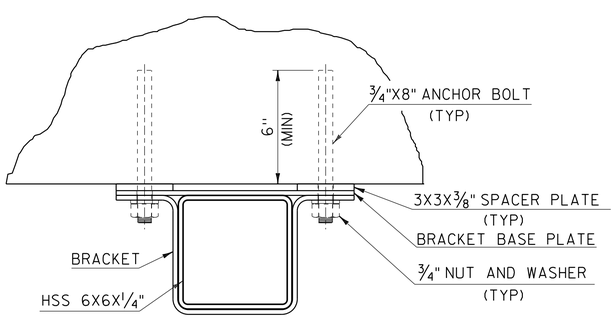

HOPPER DOWNSPOUT TUBE BRACKET ASSEMBLY

SCALE 3/4" = 1'-0"

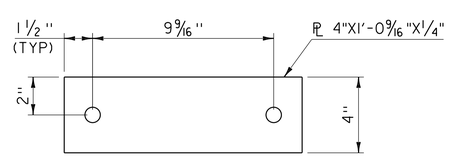

BRACKET BASE PLATE

SCALE 3/4" = 1'-0"

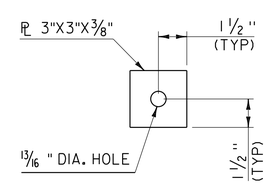

SPACER PLATE

SCALE 3/4" = 1'-0"

EXPANSION JOINT DOWNSPOUT NOTES:

1. ALL MATERIALS AND INSTALLATION COSTS FOR THE EXPANSION JOINT DOWNSPOUT, INCLUDING STEEL TUBING, RELATED HARDWARE, AND ANCHOR BOLTS SHALL BE INCLUDED IN THE UNIT BID PRICE FOR ITEM 516.11 "BRIDGE EXPANSION JOINT, VERMONT". THE LENGTH FOR PAYMENT SHALL BE MEASURED ALONG JOINT. PAYMENT WILL NOT BE MADE FOR LENGTH OF DOWNSPOUT.

2. HOLLOW STRUCTURAL STEEL TUBING SHALL CONFORM TO THE REQUIREMENTS OF STANDARD SPECIFICATION SECTION 714.11.

3. ALL PLATES, BARS, AND ANGLES SHALL CONFORM TO THE REQUIREMENTS OF STANDARD SPECIFICATION SUBSECTION 714.02.

4. DOWNSPOUTS SHALL BE GALVANIZED IN ACCORDANCE WITH STANDARD SPECIFICATION SUBSECTION 726.08.

5. ALL BOLTS AND RELATED HARDWARE SHALL CONFORM TO THE REQUIREMENTS OF SUBSECTION 714.04 AND SHALL BE GALVANIZED IN ACCORDANCE WITH SUBSECTION 726.08.

6. ALL REQUIRED WELDS FOR DOWNSPOUTS SHALL BE DETAILED ON FABRICATION DRAWINGS WHICH SHALL ALSO INCLUDE ALL APPLICABLE WELDING PROCEDURES.

7. AFTER ALL PAVING AND CONCRETE OPERATIONS THE SCUPPERS AND DOWNSPOUTS SHALL BE CLEANED OF ALL CONTAMINATION BY FLUSHING.

PROJECT NAME: RICHFORD-SUTTON, PQ	
PROJECT NUMBER: BHF 0814(1)	
FILE NAME: s10c222sup.dgn	PLOT DATE: 26-SEP-2017
PROJECT LEADER: C. CARLSON	DRAWN BY: G. ROKES
DESIGNED BY: C. BURRALL	CHECKED BY: C. BURRALL
EXPANSION JOINT DOWNSPOUT DETAIL	SHEET 49 OF 87

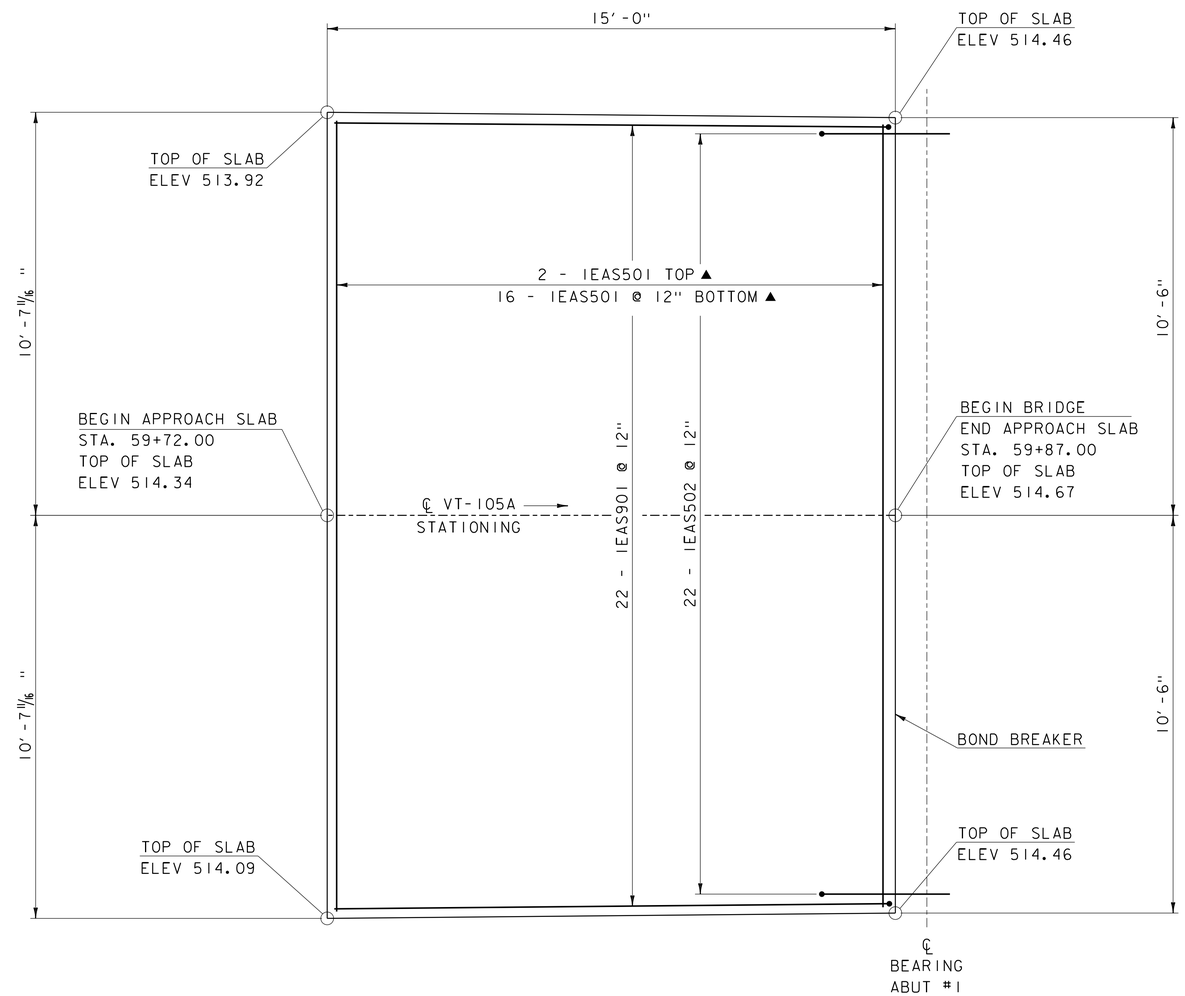

APPROACH SLAB PLAN

SCALE 1/2"=1'-0"

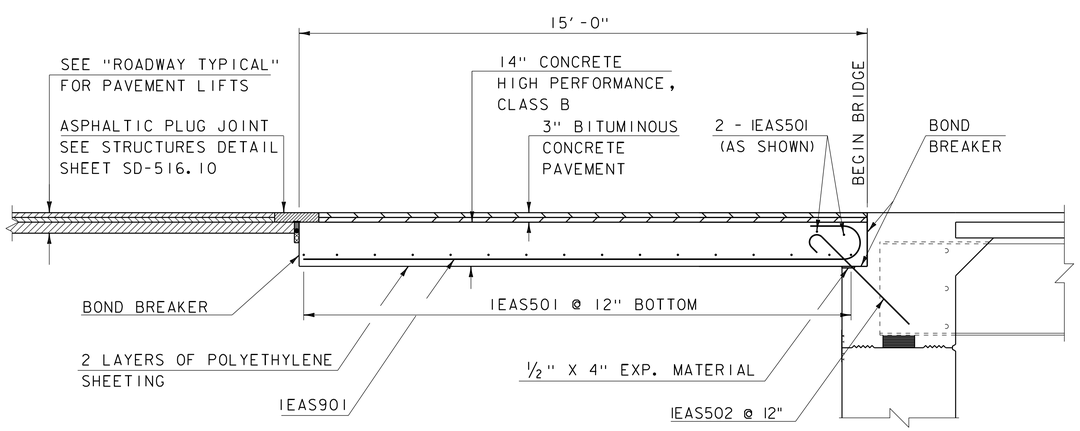

APPROACH SLAB DETAIL

SCALE 1/2"=1'-0"

NOTES:

1. COMPACT THE SUBBASE IN THE AREA UNDER THE APPROACH SLAB TO A SMOOTH SURFACE.

2. MATERIAL FOR POLYETHYLENE SHEETING SHALL MEET THE REQUIREMENTS OF SUBSECTION 725.01(c) OF THE STANDARD SPECIFICATIONS. PLACE THE SHEETING ON TOP OF THE FINISHED SUBBASE FOR THE FULL LENGTH AND WIDTH OF THE APPROACH SLAB, AS SHOWN IN THE APPROACH SLAB DETAIL. LAP SHEETING AT LEAST 24 INCHES. PAYMENT INCIDENTAL TO ITEM 501.34 "CONCRETE, HIGH PERFORMANCE CLASS B".

3. POUR APPROACH SLAB CONCRETE IN THE EARLY MORNING BEFORE THE SUPERSTRUCTURE EXPANDS.

4. APPLY 2 COATS BOND BREAKER. PAYMENT INCIDENTAL TO ITEM 501.34 "CONCRETE, HIGH PERFORMANCE CLASS B".

PROJECT NAME: RICHFORD-SUTTON, PQ	
PROJECT NUMBER: BHF 0814(1)	
FILE NAME: s10c222sup.dgn	PLOT DATE: 26-SEP-2017
PROJECT LEADER: C. CARLSON	DRAWN BY: G. ROKES
DESIGNED BY: C. BURRALL	CHECKED BY: C. BURRALL
APPROACH SLAB DETAILS	SHEET 50 OF 87

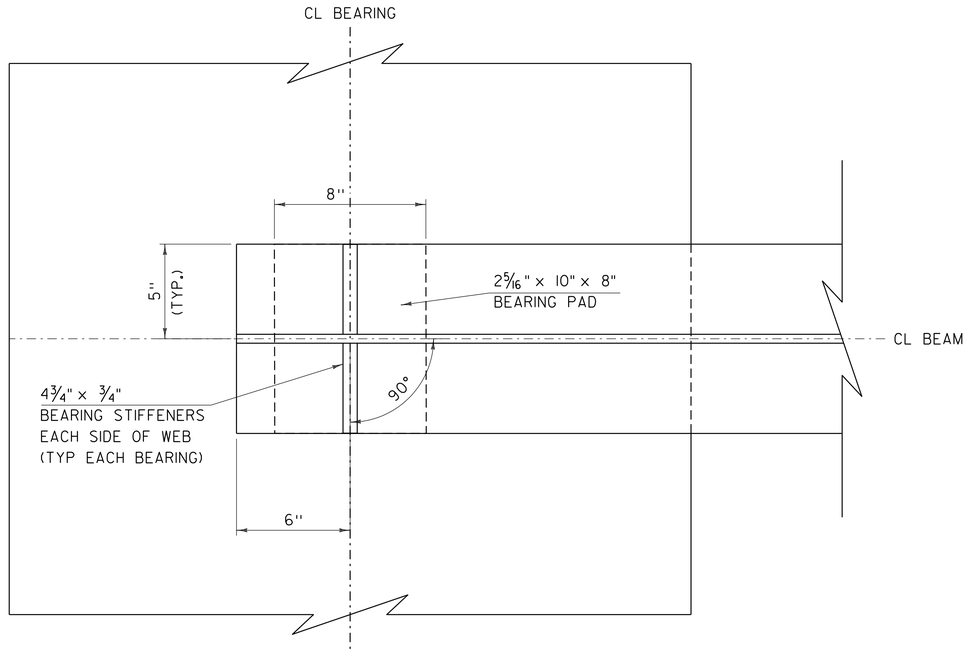

BEARING PLAN

SCALE: 3" = 1'-0"

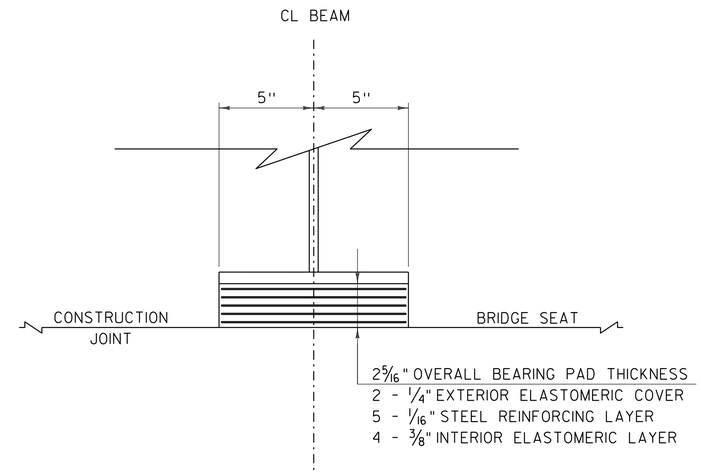

BEARING SECTION

SCALE: 3" = 1'-0"

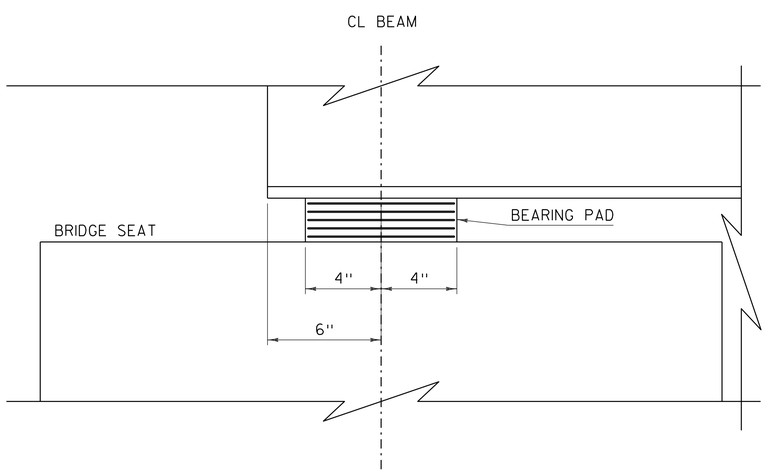

BEARING ELEVATION

SCALE: 3" = 1'-0"

EXPANSION BEARING AT ABUTMENT #1:

1. ABUTMENT #1 BEARINGS SHALL BE PAID FOR UNDER ITEM 531.17, "BEARING DEVICE ASSEMBLY, STEEL REINFORCED ELASTOMERIC PAD (ABUTMENT #1)" AND SHALL CONFORM TO APPLICABLE SUBSECTIONS OF SECTIONS 531 AND 731.

2. ALL REINFORCEMENT BETWEEN LAYERS OF ELASTOMERIC SHALL BE STEEL MEETING ASTM A36. ALL INTERNAL STEEL PLATES SHALL BE SAND BLASTED AND FREE OF COATINGS, RUST, AND MILL SCALE. THE PLATES SHALL BE FREE OF SHARP EDGES AND BURRS.

3. STEEL REINFORCED ELASTOMERIC PAD BEARINGS SHALL HAVE A MINIMUM OF 1/8" EDGE SEAL OF ELASTOMER INTEGRAL WITH THE BEARING OVER ALL INTERNAL PLATES.

PROJECT NAME: RICHFORD-SUTTON, PQ	
PROJECT NUMBER: BHF 0814(1)	
FILE NAME: s10c222brg.dgn	PLOT DATE: 26-SEP-2017
PROJECT LEADER: C. CARLSON	DRAWN BY: C. BURRALL
DESIGNED BY: C. BURRALL	CHECKED BY: F. BARROWS
EXPANSION BEARING ABUTMENT #1	SHEET 51 OF 87

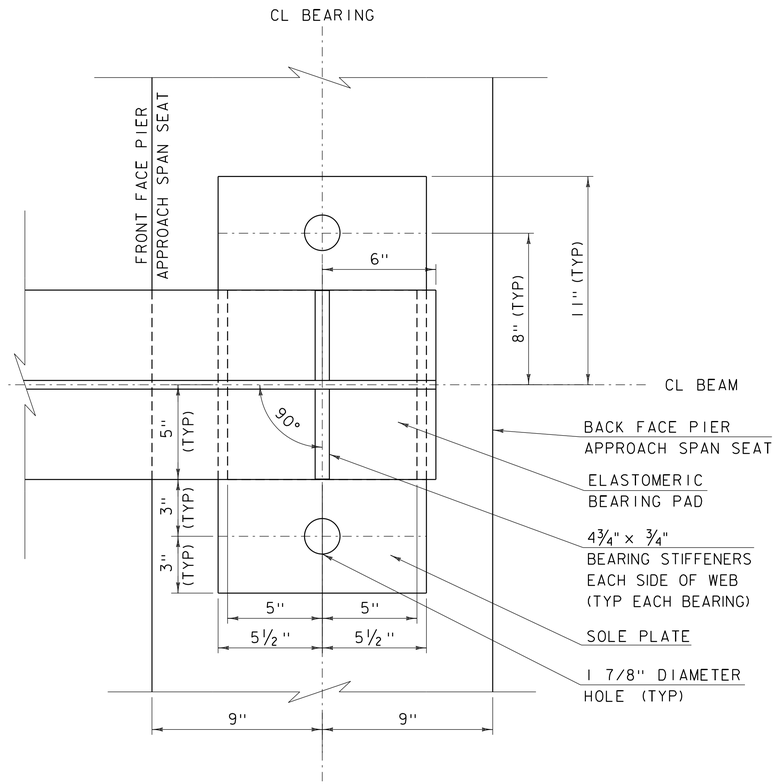

PLAN

SCALE: 3" = 1'-0"

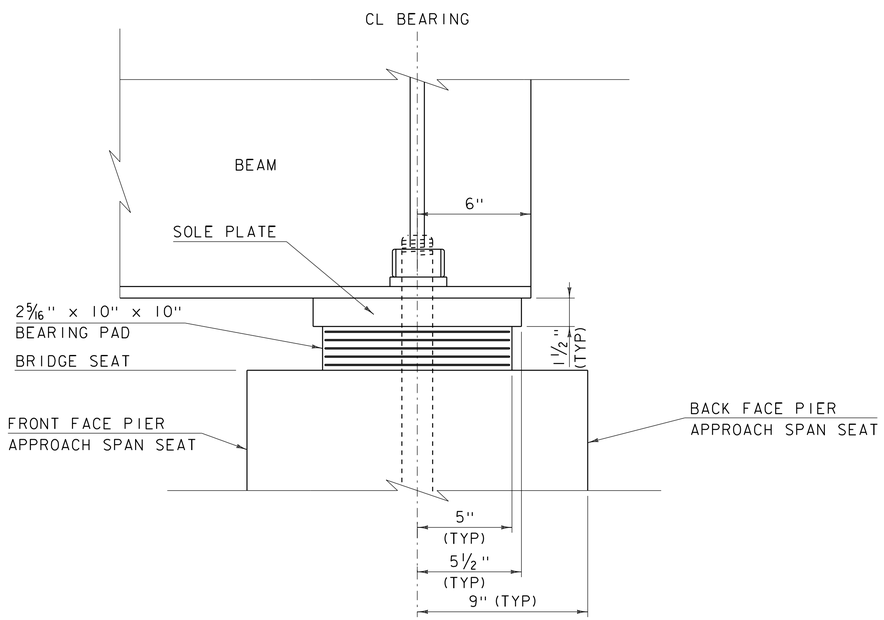

ELEVATION

SCALE: 3" = 1'-0"

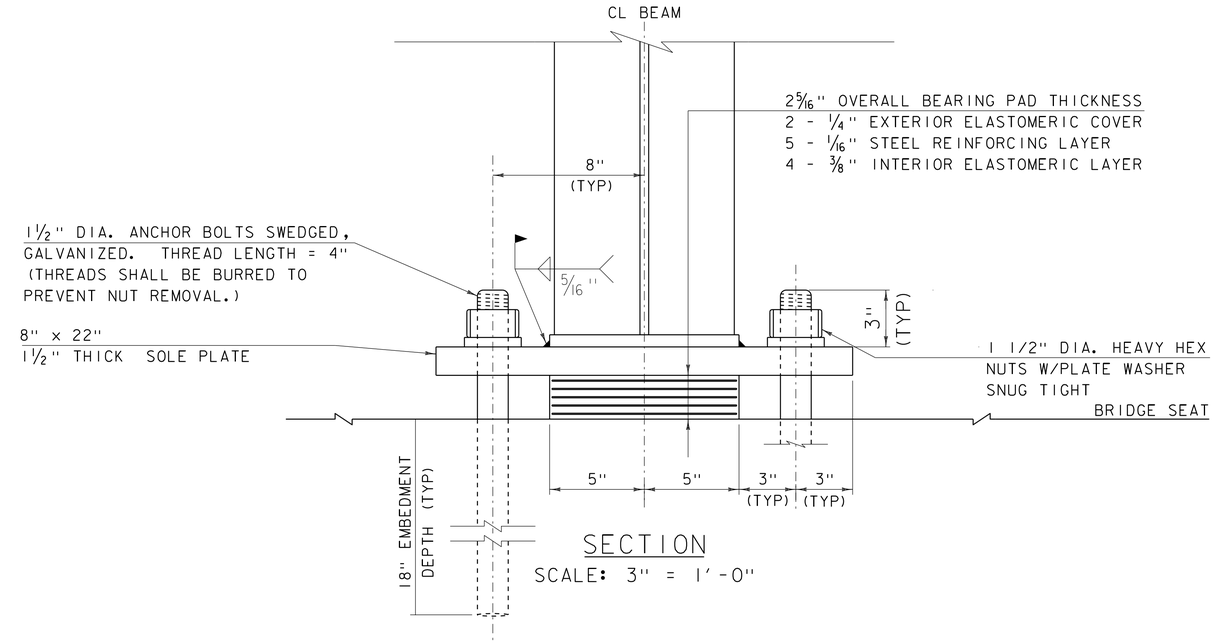

SECTION

SCALE: 3" = 1'-0"

FIXED BEARING AT APPROACH SPAN PIER:

1. BEARINGS WILL BE PAID FOR UNDER ITEM 531.18, "BEARING DEVICE ASSEMBLY, ELASTOMERIC PAD W/ EXT. LOAD PLATES (APPROACH SPAN PIER)" AND SHALL CONFORM TO APPLICABLE SUBSECTIONS OF SECTION 531 AND 731.

2. FABRICATION DRAWINGS, INCLUDING ASSOCIATED WELDING PROCEDURES, SHALL BE SUBMITTED CONFORMING TO SUBSECTION 531.03.

3. DESIGN CRITERIA:
   A. DEAD LOAD ROTATION: 0.006 RADIANS
   B. DEAD LOAD (UNFACTORED): 16 KIPS
   C. LIVE LOAD ROTATION: 0.003 RADIANS
   D. LIVE LOAD (UNFACTORED): 37 KIPS
   E. ELASTOMER SHEAR MODULUS: 95 PSI

4. ALL STEEL IN BEARINGS DEVICES SHALL BE AASHTO M 270M/M 270 GRADE 36, UNLESS OTHERWISE NOTED.

5. ALL REINFORCEMENT BETWEEN LAYERS OF ELASTOMER SHALL BE STEEL MEETING THE REQUIREMENTS OF SUBSECTION 714.02. ALL INTERNAL STEEL SHEETS SHALL BE SAND BLASTED AND FREE OF COATINGS, RUST AND MILL SCALE. THE SHEETS SHALL BE FREE OF SHARP EDGES AND BURRS.

6. STEEL REINFORCED ELASTOMERIC BEARINGS SHALL HAVE A MINIMUM ⅛" EDGE SEAL OF ELASTOMER INTEGRAL WITH BEARING OVER ALL INTERNAL SHEETS.

7. ALL BEARING DEVICES SHALL BE GALVANIZED OR METALIZED AS PER SUBSECTIONS 506.14 AND 531.04(b). IF THE BEARING DEVICES ARE METALIZED, THEY SHALL BE SEALED WITH AN APPROVED SEALER AS SPECIFIED IN SUBSECTION 531.04(b). ALL AREAS OF GALVANIZING OR METALIZING DAMAGED BY FIELD WELDING OR HANDLING SHALL BE REPAIRED IN CONFORMANCE WITH SUBSECTION 726.08.

8. THE CONCRETE SURFACE UNDER THE BEARING DEVICES SHALL BE LEVEL.

9. ANCHOR BOLTS SHALL HAVE A MINIMUM 18 INCH EMBEDMENT INTO THE CONCRETE AND SHALL CONFORM TO SUBSECTION 714.08.

PROJECT NAME: RICHFORD-SUTTON, PQ	
PROJECT NUMBER: BHF 0814(1)	
FILE NAME: s10c222brg.dgn	PLOT DATE: 26-SEP-2017
PROJECT LEADER: C. CARLSON	DRAWN BY: C. BURRALL
DESIGNED BY: C. BURRALL	CHECKED BY: F. BARROWS
FIXED BEARING APPROACH SPAN PIER	SHEET 52 OF 87

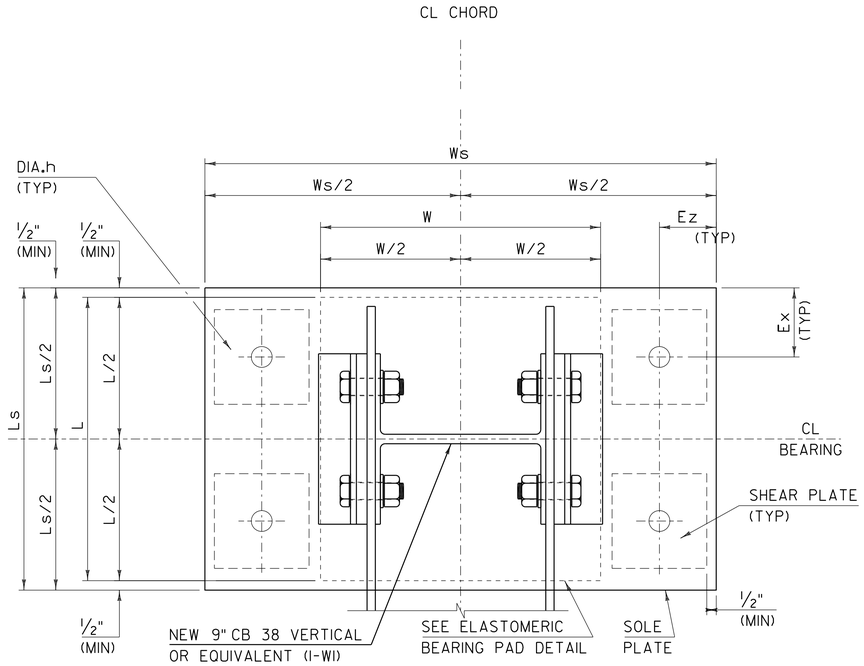

FIXED BEARING TYPICAL PLAN

(NTS)

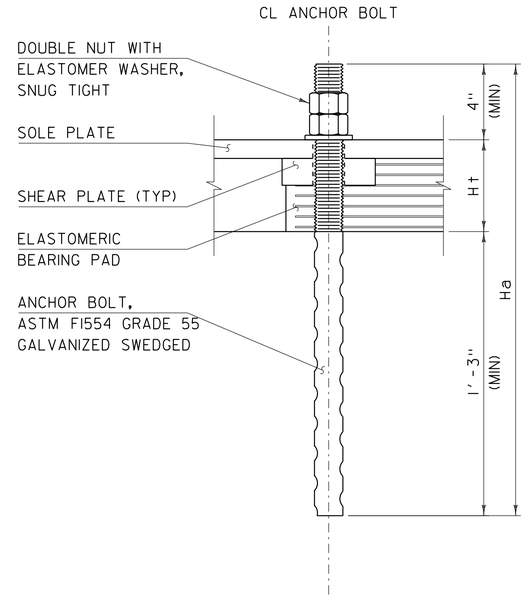

ANCHOR BOLT ASSEMBLY DETAIL

(NTS)

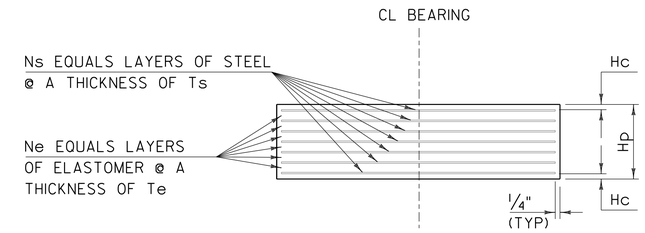

ELASTOMERIC BEARING PAD DETAIL

(NTS)

FIXED BEARING AT TRUSS SPAN PIER

1. BEARINGS WILL BE PAID FOR UNDER ITEM 531.18, "BEARING DEVICE ASSEMBLY, ELASTOMERIC PAD W/ EXT. LOAD PLATES (TRUSS SPAN PIER)" AND SHALL CONFORM TO APPLICABLE SUBSECTIONS OF SECTION 531 AND 731.
2. THE TOTAL HEIGHT OF THE ELASTOMER LAYERS AND STEEL LAMINATIONS: Hp=2(Hc)+Ns(Ts)+Ne(Te)
3. THE TOTAL HEIGHT OF THE ANCHOR BOLT: Ha=(1'-6")+Ht+(4")
4. VERIFY THAT BRIDGE SEAT WIDTH PROVIDES SUFFICIENT CONCRETE COVER FOR ANCHOR BOLTS.
5. SHEAR PLATES (TO REINFORCE SOLE PLATE) ARE 5" X 5 "X 2 1/2"
6. EXT = EXTENSION OF GUSSET PLATE PAST CL, FOR THIS DIMENSION SEE THE FRAMING PLAN FOR THIS PROJECT.
7. THE BEARING MANUFACTURER SHALL INCLUDE A TEMPERATURE SETTING TABLE ON THE FABRICATION DRAWINGS.
8. THE STEEL SOLE PLATES SHALL BE HOT BONDED TO THE REINFORCED ELASTOMERIC PAD DURING THE VULCANIZATION PROCESS. THE STEEL SURFACES TO BE BONDED TO THE PAD SHALL NOT BE METALIZED.
9. PRIOR TO WELDING BEAMS/GIRDERS TO SOLE PLATES AT THE PIERS, THE CONCRETE DECK SHALL BE PLACED AND CURED, AND THE BEAMS/GIRDERS SHALL BE RAISED TO ALLOW RELEASE OF INITIAL BEARING DEFORMATION DUE TO BEAM/GIRDER CAMBER RELAXATION.
10. THE SOLE PLATE WILL BE WELDED TO BEARING ANCHOR BRACKET Sa (ANGLE L 3" x 2" x 5/16") THAT WILL ATTACH VIA BOLTS TO A NEW GUSSET PLATE AND NEW VERTICAL BEARING POST AT THE BEARINGS. THIS WORK WILL BE INCIDENTAL TO ITEM 531.18.
11. DESIGN CRITERIA:
    A. DESIGN ROTATION
       PIER TRUSS = 0.00635 RAD
    B. HORIZONTAL CAPACITY SHALL BE MINIMUM OF 20% VERTICAL LOAD IN ANY UNRESTRAINED DIRECTION.
    C. BEARINGS SHALL BE RESET ONCE THE FULL DEAD LOAD HAS BEEN APPLIED TO THE STRUCTURAL SYSTEM. THE CONTRACTOR SHALL MEET ALL OF THE REQUIREMENTS OF SECTION 502, INCLDUING THE SUBMITTAL OF CONSTRUCTION DRAWINGS. ALL MATERIALS AND WORK REQUIRED IN ORDER TO RESET BEARINGS SHALL BE INCIDENTAL TO THE STRUCTURAL STEEL ITEM IN THE CONTRACT. UPON RESETTING THE BEARINGS THE BEAMS/GIRDERS SHALL BE WELDED TO THE SOLE PLATE PER THE REQUIREMENTS OF SECTION 531.

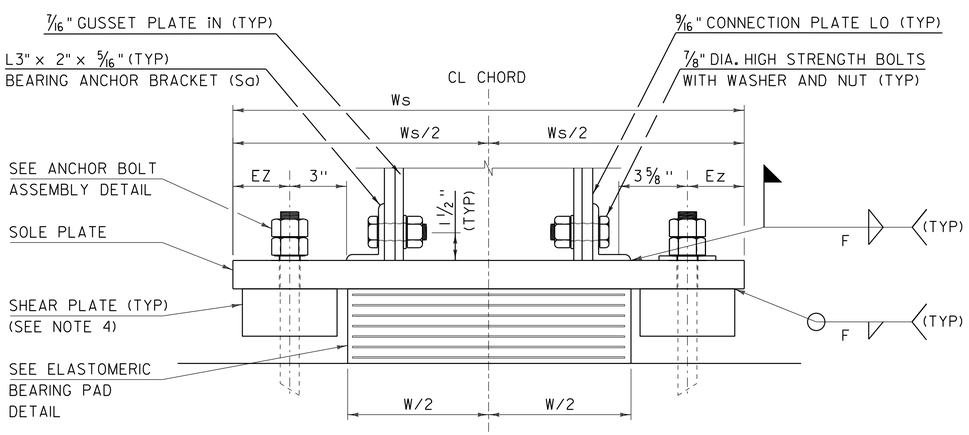

FIXED BEARING TYPICAL ELEVATION

(NTS)

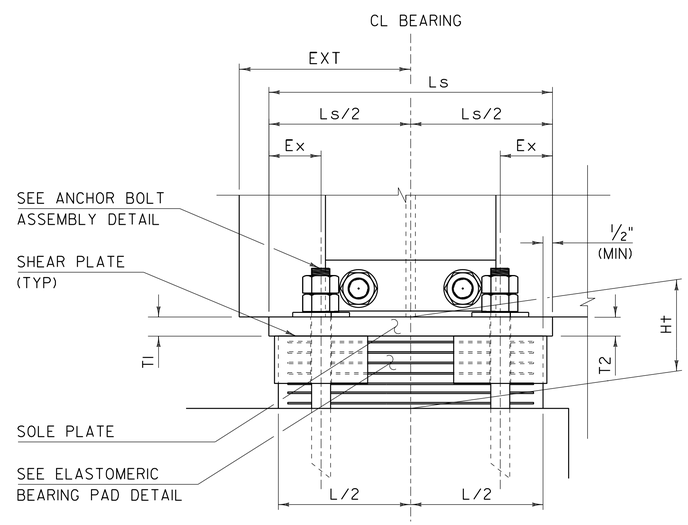

FIXED BEARING TYPICAL SECTION

(NTS)

NOTE; ALL LOADS ARE UNFACTORED

ELASTOMERIC BEARING TABLE - FIXED

LOCATION	QUANTITY REQUIRED	DL+SDL (kips)	LL W/O IMP. (kips)	TOTAL DESIGN REACTION (kips)	ELASTOMERIC PAD								ANCHOR BOLTS			ANCHOR BOLT HOLES			WELD SIZE	MASONRY PLATE			SOLE PLATE				BRG. Ht
					L	W	Ns	Ts	Ne	Te	Hc	Hp	PER/BRG.	DIA.a	Ha	DIA.h	Ez	Ex	F	Wm	Lm	Tm	Ws	Ls	T1	T2	
PIER (TRUSS)	2	152	38	191	16"	12"	7	0.0625"	6	0.375"	0.25"	3.1875"	4	1.75"	23.6875"	2.125"	3"	3"	0.3125"	n/a	n/a	n/a	27"	18"	1.5"	1.5"	4.6875"

PROJECT NAME: RICHFORD-SUTTON, PQ
PROJECT NUMBER: BHF 0814(1)

FILE NAME: sl0c222brg.dgn
PROJECT LEADER: C. CARLSON
DESIGNED BY: C. BURRALL
FIXED BEARING TRUSS SPAN PIER

PLOT DATE: 26-SEP-2017
DRAWN BY: C. BURRALL
CHECKED BY: F. BARROWS
SHEET 53 OF 87

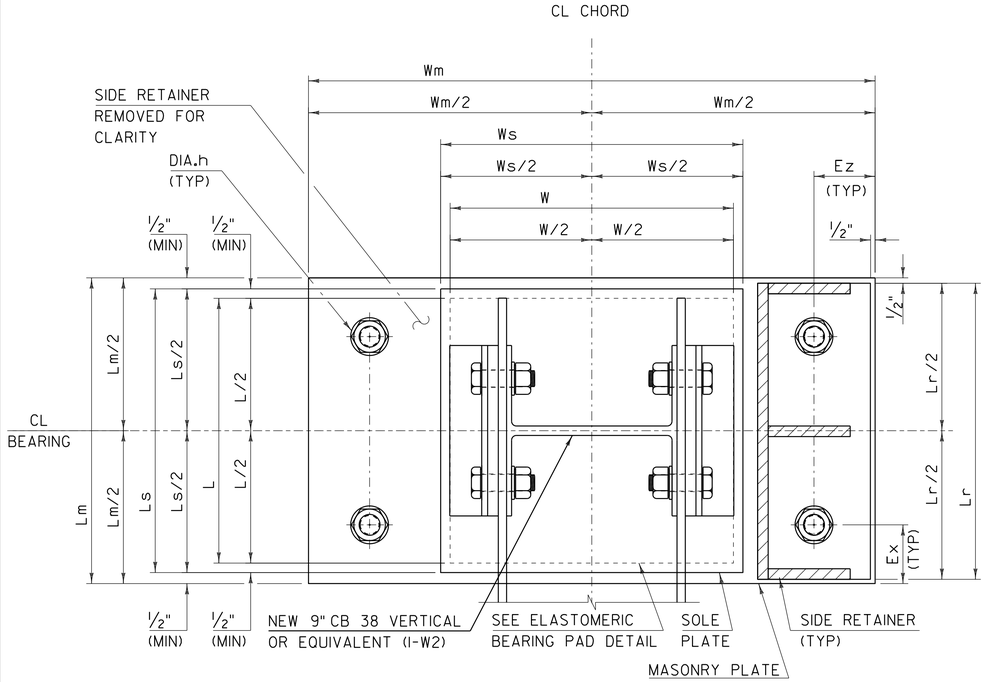

EXPANSION BEARING TYPICAL PLAN

(NTS)

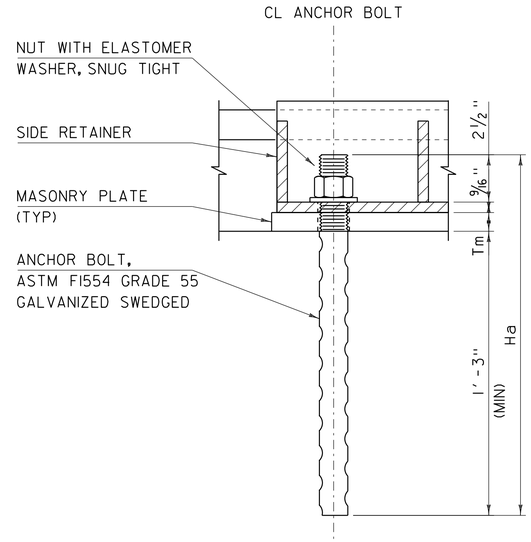

ANCHOR BOLT ASSEMBLY DETAIL

(NTS)

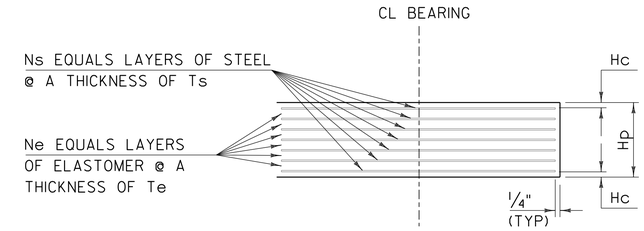

ELASTOMERIC BEARING PAD DETAIL

(NTS)

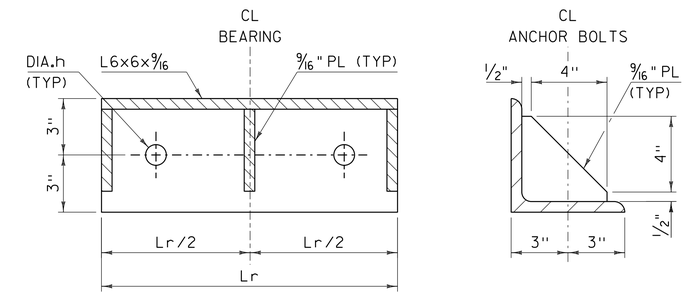

SIDE RETAINER DETAILS

(NTS)

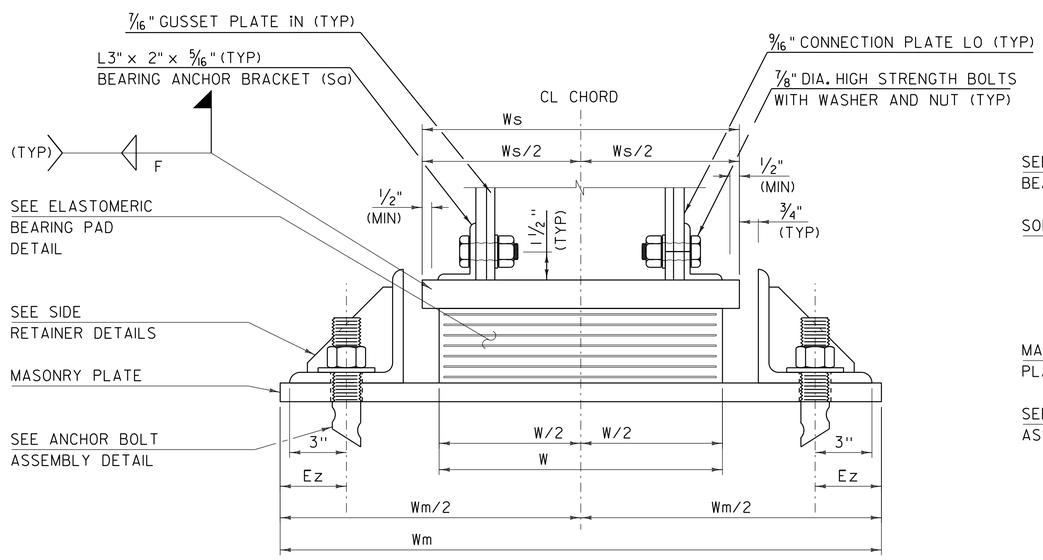

EXPANSION BEARING TYPICAL ELEVATION

(NTS)

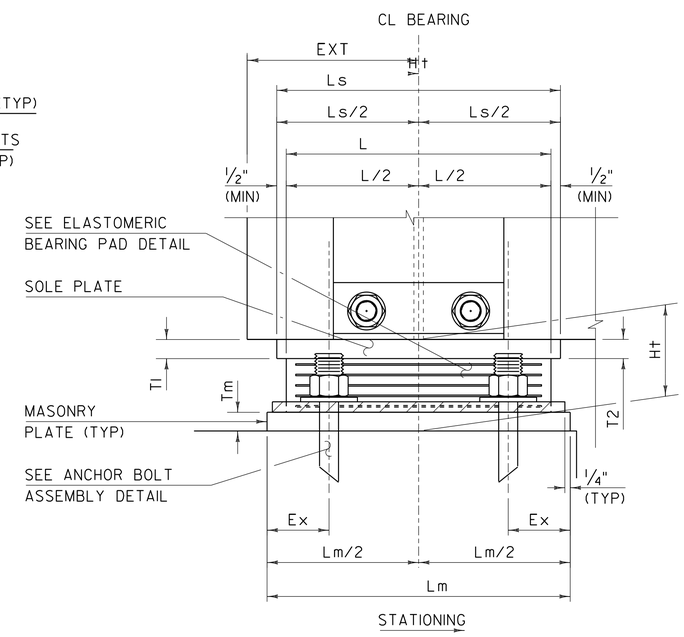

EXPANSION BEARING TYPICAL SECTION

(NTS)

EXPANSION BEARING AT ABUTMENT #2

1. BEARINGS WILL BE PAID FOR UNDER ITEM 531.18, "BEARING DEVICE ASSEMBLY, ELASTOMERIC PAD W/ EXT. LOAD PLATES (ABUTMENT #2)" AND SHALL CONFORM TO APPLICABLE SUBSECTIONS OF SECTION 531 AND 731.
2. THE TOTAL HEIGHT OF THE ELASTOMER LAYERS AND STEEL LAMINATIONS: Hp=2(Hc)+Ns(Ts)+Ne(Te)
3. THE TOTAL HEIGHT OF THE ANCHOR BOLT: Ha=(1'-6")+Ht+(4")
4. VERIFY THAT BRIDGE SEAT WIDTH PROVIDES SUFFICIENT CONCRETE COVER FOR ANCHOR BOLTS.
5. SIDE RETAINERS TO BE L6x6x9/16, Lr=Lm-1/2"
6. EXT = EXTENSION OF GUSSET PLATE PAST CL, FOR THIS DIMENSION SEE THE FRAMING PLAN FOR THIS PROJECT
7. THE BEARING MANUFACTURER SHALL INCLUDE A TEMPERATURE SETTING TABLE ON THE FABRICATION DRAWINGS.
8. THE STEEL SOLE PLATES AND MASONRY PLATES SHALL BE HOT BONDED TO THE REINFORCED ELASTOMERIC PAD DURING THE VULCANIZATION PROCESS. THE STEEL SURFACES TO BE BONDED TO THE PAD SHALL NOT BE METALIZED.
9. THE SOLE PLATE WILL BE WELDED TO BEARING ANCHOR BRACKET Sa (ANGLE L 3" x 2" x 5/16") THAT WILL ATTACH VIA BOLTS TO A NEW GUSSET PLATE AND NEW VERTICAL BEARING POST AT THE BEARINGS. THIS WORK WILL BE INCIDENTAL TO ITEM 531.18.
10. DESIGN CRITERIA:
    A. DESIGN ROTATION
       ABUTMENT 2 = 0.00635 RAD
    B. HORIZONTAL CAPACITY SHALL BE MINIMUM OF 20% VERTICAL LOAD IN ANY UNRESTRAINED DIRECTION.
    C. BEARINGS SHALL BE REMOVED AND RESET ONCE THE FULL DEAD LOAD HAS BEEN APPLIED TO THE STRUCTURAL SYSTEM. THE CONTRACTOR SHALL MEET ALL OF THE REQUIREMENTS OF SECTION 502, INCLDUING THE SUBMITTAL OF CONSTRUCTION DRAWINGS. ALL MATERIALS AND WORK REQUIRED IN ORDER TO RESET BEARINGS SHALL BE INCIDENTAL TO THE STRUCTURAL STEEL ITEM IN THE CONTRACT. UPON RESETTING THE BEARINGS THE BEAMS/GIRDERS SHALL BE WELDED TO THE SOLE PLATE PER THE REQUIREMENTS OF SECTION 531.

NOTE; ALL LOADS ARE UNFACTORED

ELASTOMERIC BEARING TABLE - EXPANSION

LOCATION	QUANTITY REQUIRED	DL+SDL (kips)	LL W/O IMP. (kips)	TOTAL DESIGN REACTION (kips)	ELASTOMERIC PAD								ANCHOR BOLTS			ANCHOR BOLT HOLES			WELD SIZE	MASONRY PLATE			SOLE PLATE				BRG. Ht
					L	W	Ns	Ts	Ne	Te	Hc	Hp	PER/BRG.	DIA.a	Ha	DIA.h	Ez	Ex	F	Wm	Lm	Tm	Ws	Ls	T1	T2	
ABUTMENT 2	2	152	38	191	16"	12"	7	0.0625"	6	0.375"	0.25"	3.1875"	4	1.5"	24.6875"	1.875"	3.5"	3.5"	0.3125"	30"	18"	1"	16"	17"	1.5"	1.5"	5.6875"

PROJECT NAME: RICHFORD-SUTTON, PQ
PROJECT NUMBER: BHF 0814(1)

FILE NAME: s10c222brg.dgn
PROJECT LEADER: C. CARLSON
DESIGNED BY: C. BURRALL
EXPANSION BEARING ABUTMENT #2

PLOT DATE: 26-SEP-2017
DRAWN BY: C. BURRALL
CHECKED BY: F. BARROWS
SHEET 54 OF 87

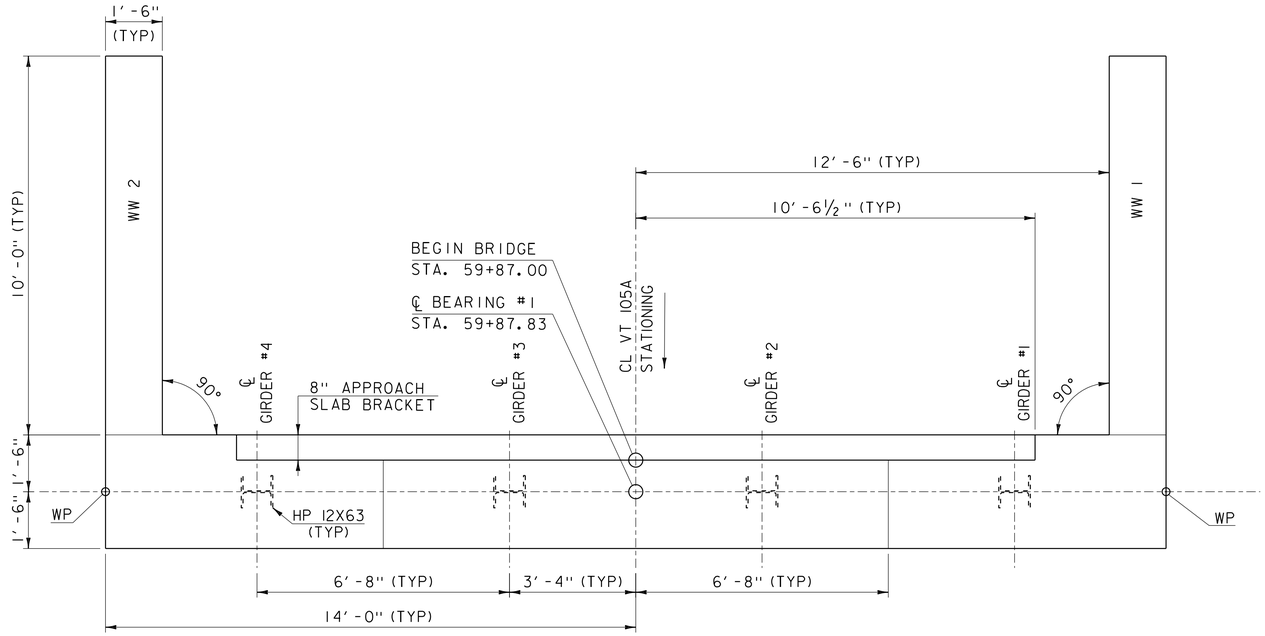

ABUTMENT NO.1 PLAN

SCALE ½"=1'-0"

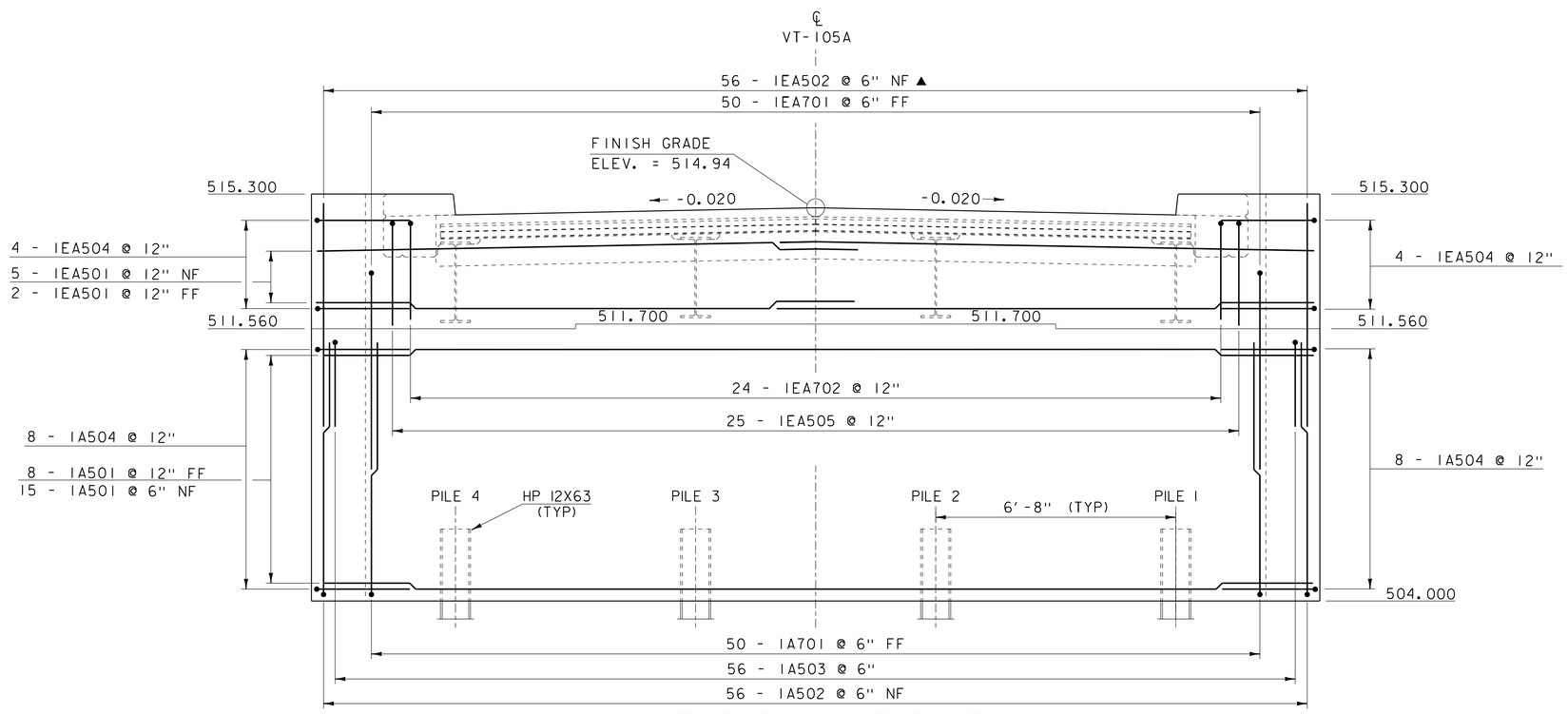

ABUTMENT NO.1 ELEVATION

SCALE ½"=1'-0"

NOTE:

NF = NEAR FACE
FF = FAR FACE
EF = EACH FACE
▲ = CUT TO FIT IN FIELD
3" CLEAR, UNLESS OTHERWISE SPECIFIED ON THE PLANS.
2'-2" BAR LAP UNLESS OTHERWISE SPECIFIED ON THE PLANS.

PROJECT NAME: RICHFORD-SUTTON, PQ	
PROJECT NUMBER: BHF 0814(1)	
FILE NAME: s10c222sub.dgn	PLOT DATE: 26-SEP-2017
PROJECT LEADER: C. CARLSON	DRAWN BY: G. ROKES
DESIGNED BY: C. BURRALL	CHECKED BY: C. BURRALL
ABUTMENT #1 PLAN AND ELEVATION	SHEET 55 OF 87

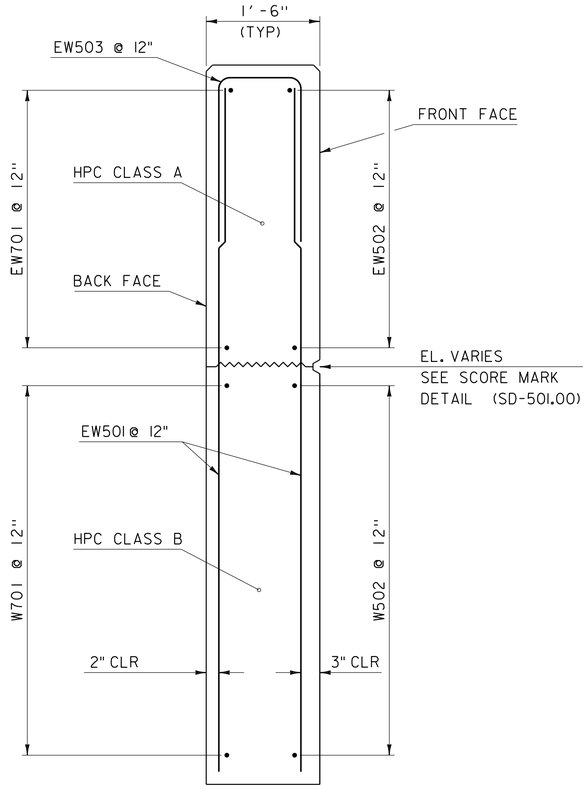

WINGWALL #1/#2 TYPICAL SECTION

SCALE 1"=1'-0"

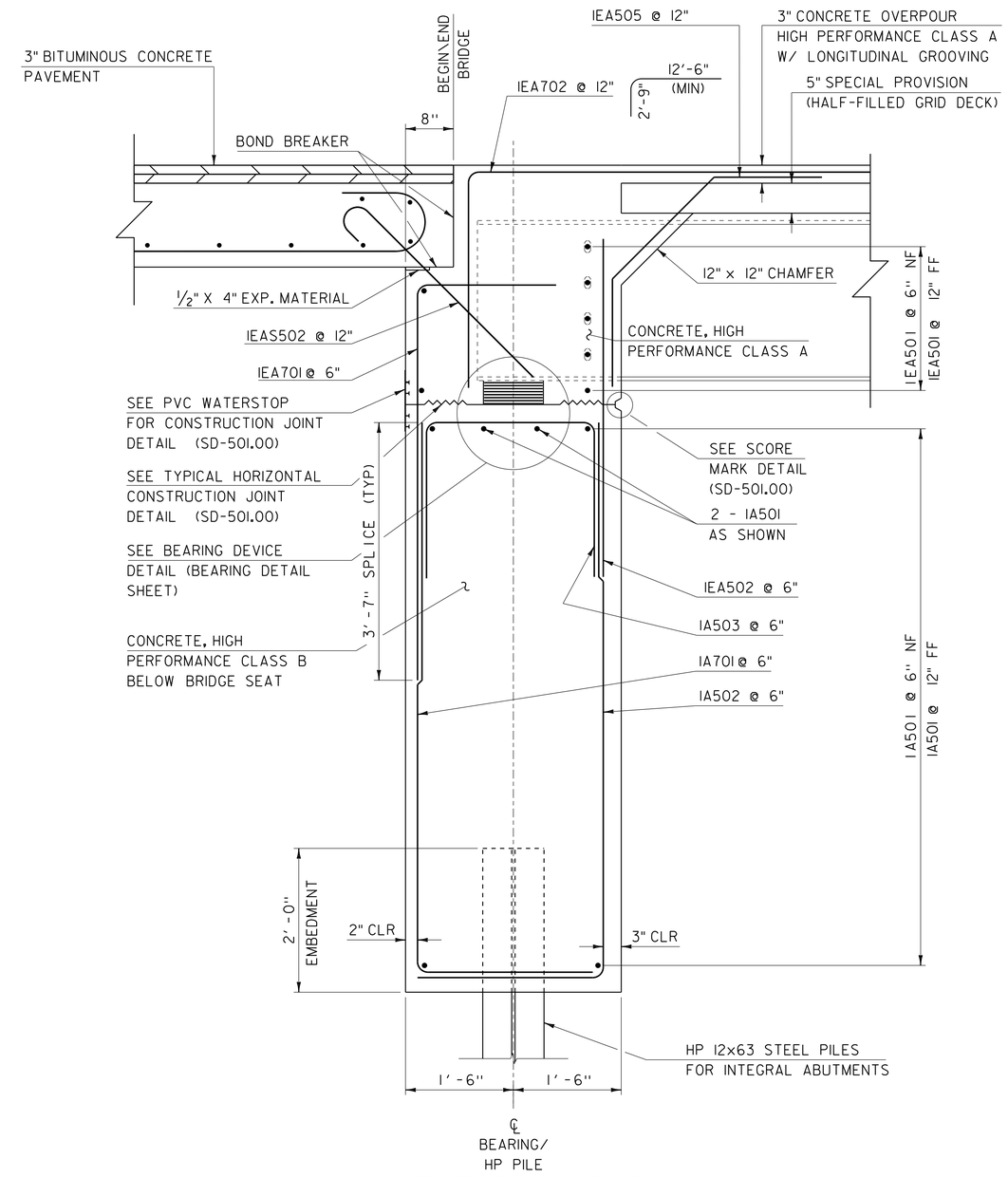

ABUTMENT # 1 TYPICAL

SCALE 1"=1'-0"

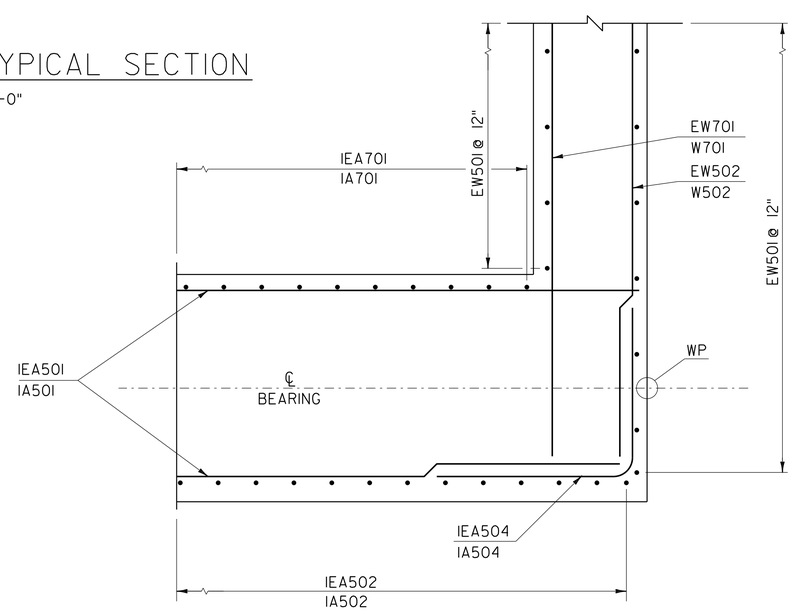

CORNER DETAIL

SCALE 1"=1'-0"

NOTE:

NF = NEAR FACE
FF = FAR FACE
EF = EACH FACE
▲ = CUT TO FIT IN FIELD
3" CLEAR, UNLESS OTHERWISE SPECIFIED ON THE PLANS.
2'-2" BAR LAP UNLESS OTHERWISE SPECIFIED ON THE PLANS.

PROJECT NAME: RICHFORD-SUTTON, PQ	
PROJECT NUMBER: BHF 0814(1)	
FILE NAME: s10c222sub.dgn	PLOT DATE: 26-SEP-2017
PROJECT LEADER: C. CARLSON	DRAWN BY: G. ROKES
DESIGNED BY: C. BURRALL	CHECKED BY: C. BURRALL
ABUTMENT #1 AND WINGWALL #1/#2 TYPICALS	SHEET 56 OF 87

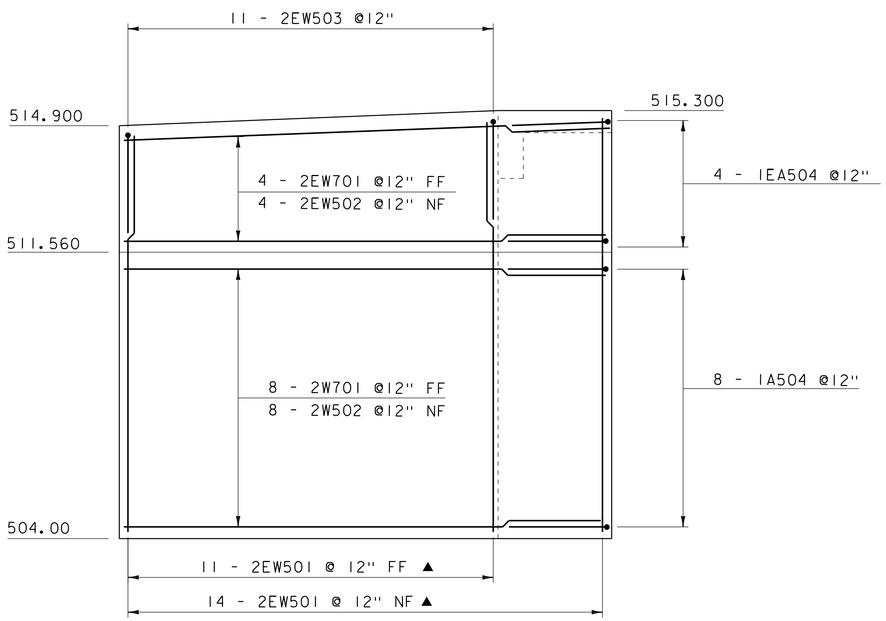

WINGWALL NO 2. ELEVATION

SCALE ½"=1'-0"

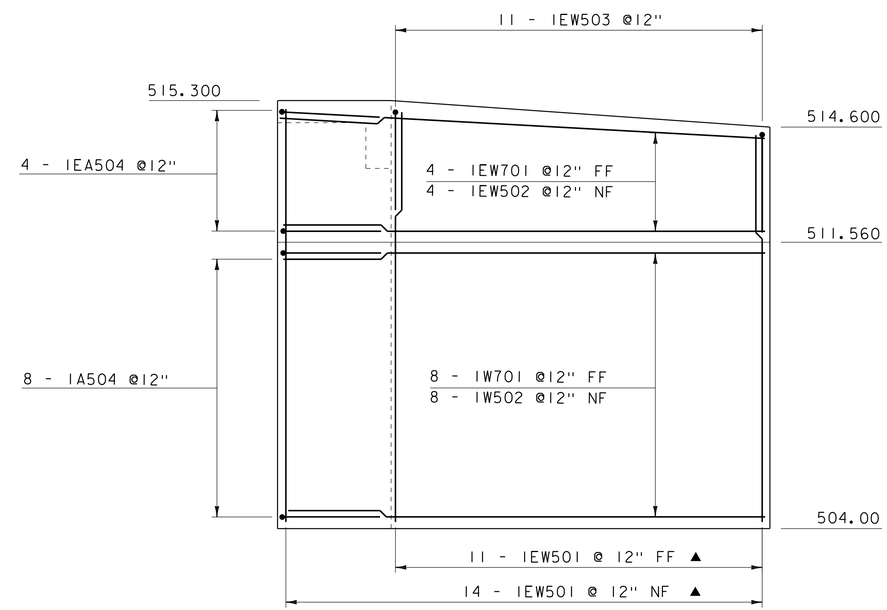

WINGWALL NO 1. ELEVATION

SCALE ½"=1'-0"

NOTE:

NF = NEAR FACE
FF = FAR FACE
EF = EACH FACE
▲ = CUT TO FIT IN FIELD
3" CLEAR, UNLESS OTHERWISE SPECIFIED ON THE PLANS.
2'-2" BAR LAP UNLESS OTHERWISE SPECIFIED ON THE PLANS.

PROJECT NAME: RICHFORD-SUTTON, PQ	
PROJECT NUMBER: BHF 0814(1)	
FILE NAME: s10c222sub.dgn	PLOT DATE: 26-SEP-2017
PROJECT LEADER: C. CARLSON	DRAWN BY: G. ROKES
DESIGNED BY: C. BURRALL	CHECKED BY: C. BURRALL
WINGWALL #1 AND #2 ELEVATION	SHEET 57 OF 87

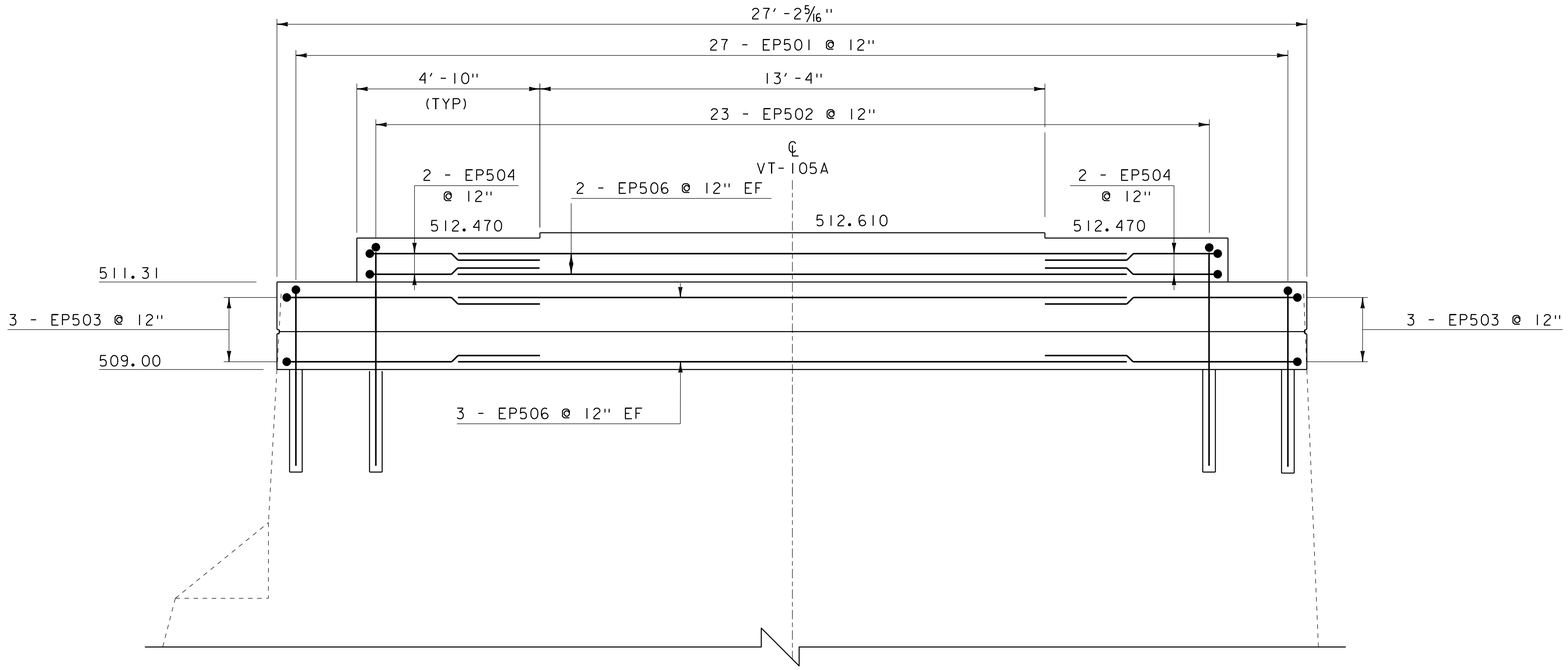

PIER CAP ELEVATION

SCALE 1/2"=1'-0"

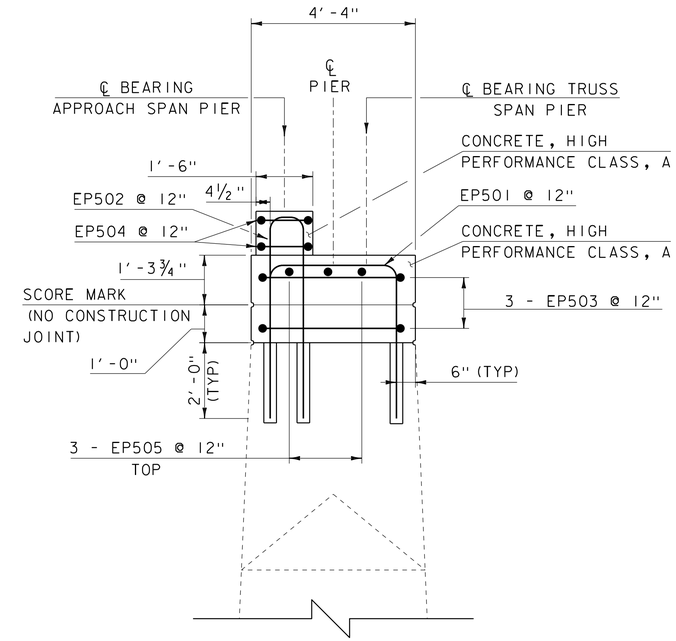

PIER CAP TYPICAL

SCALE 1/2"=1'-0"

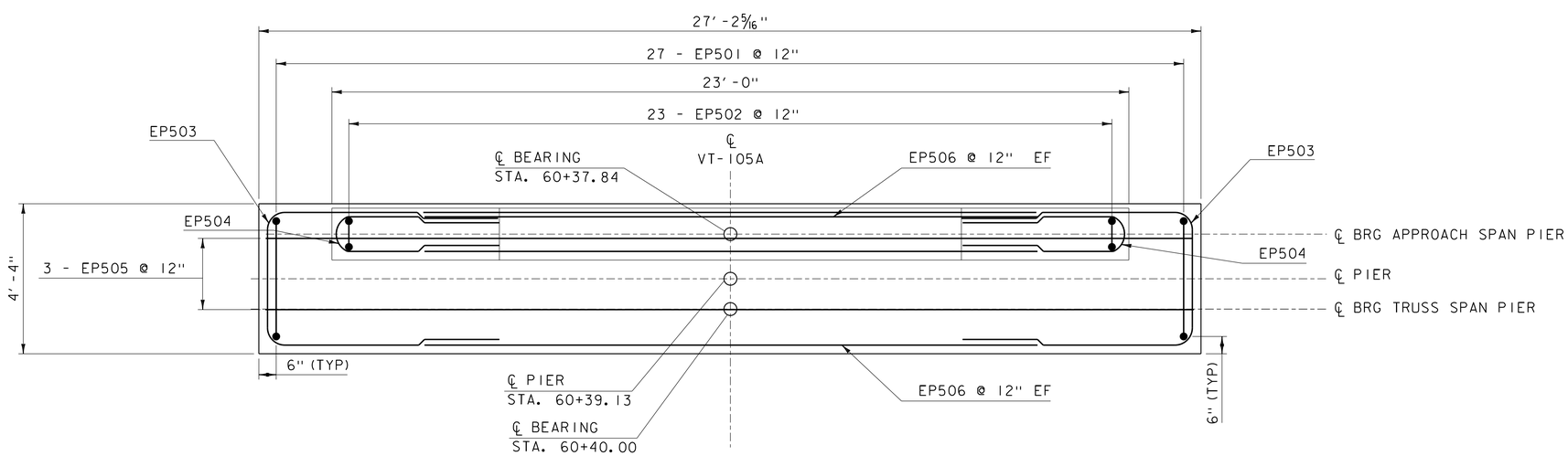

PIER CAP PLAN

SCALE 1/2"=1'-0"

NOTE:

NF = NEAR FACE
FF = FAR FACE
EF = EACH FACE
▲ = CUT TO FIT IN FIELD
3" CLEAR, UNLESS OTHERWISE SPECIFIED ON THE PLANS.
2'-2" BAR LAP UNLESS OTHERWISE SPECIFIED ON THE PLANS.

PROJECT NAME: RICHFORD-SUTTON, PQ	
PROJECT NUMBER: BHF 0814(1)	
FILE NAME: s10c222sub.dgn	PLOT DATE: 26-SEP-2017
PROJECT LEADER: C. CARLSON	DRAWN BY: G. ROKES
DESIGNED BY: C. BURRALL	CHECKED BY: C. BURRALL
PIER CAP DETAILS	SHEET 58 OF 87

SUBSTRUCTURE NOTES

1. ALL SUBSTRUCTURE REPAIR WORK SHALL INCLUDE REMOVAL OF UNSOUND AND DELAMINATED CONCRETE AS DIRECTED BY THE ENGINEER AND REPAIRED IN ACCORDANCE WITH ITEMS 580.14, "REPAIR OF CONCRETE SUBSTRUCTURE SURFACE, CLASS II" AND ITEM 580.15, "REPAIR OF CONCRETE SUBSTRUCTURE SURFACE, CLASS III"

2. THE PREPARED SURFACES SHALL BE THOROUGHLY SANDBLASTED TO REMOVE ALL LOOSE MATERIAL AND ANY CONTAMINANTS OR EFFLORESCENCE. THE REINFORCING STEEL (IF EXPOSED) SHALL BE SANDBLASTED. THE MATERIAL USED TO FILL A PATCH SHALL BE PLACED AND FINISHED OR FORMED SO THAT THE FINAL SURFACE WILL HAVE THE SAME SCORE MARKS AND EXTERIOR FACE APPEARANCE AS THE ORIGINAL BEING REPAIRED. THE SURFACE SHALL BE THOROUGHLY WETTED PRIOR TO PLACEMENT OF PATCHING MATERIAL OR NEW CONCRETE. IMMEDIATELY PRIOR TO PLACEMENT, THE SURFACE SHALL BE COATED WITH NEAT CEMENT PASTE, MIXED TO THE CONSISTENCY OF THICK LATEX PAINT (THOROUGHLY BRUSHED INTO THE SURFACE). WHEN "OVERHEAD AND VERTICAL CONCRETE REPAIR MATERIAL" CONFORMING TO SUBSECTION 780.02 IS USED, THE BONDING AGENT (IF ANY REQUIRED) AND ITS APPLICATION PROCEDURE SHALL COMPLY WITH THE REQUIREMENTS OF THE PATCHING MATERIAL MANUFACTURER.

2. A QUANTITY OF ITEMS 580.14 AND 580.15 HAVE BEEN INCLUDED IN THE CONTRACT DOCUMENTS. THE RESIDENT ENGINEER WILL DETERMINE THE COMPETENCY OF THE SUBSTRUCTURE CONCRETE AND DETERMINE THE EXACT AREAS AND LEVEL OF REPAIR NEEDED. THE PICTURES ON THIS SHEET REPRESENT THE EXISTING CONDITION OF THE SUBSTRUCTURES BUT DO NOT SHOW ALL THE AFFECTED AREAS. THE ELEVATION VIEWS OF THE SUBSTRUCTURES SHOWN ARE ONLY ESTIMATES OF THE REPAIR AREA.

PA-1

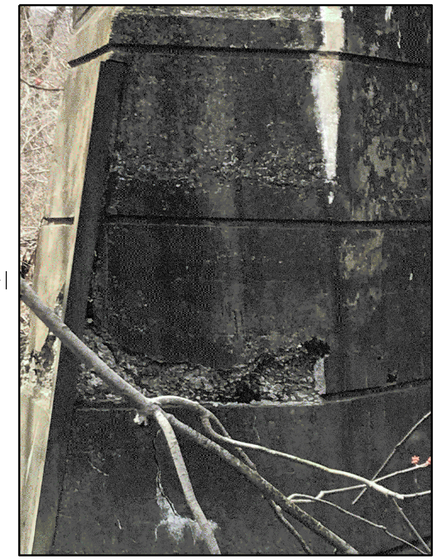

PC

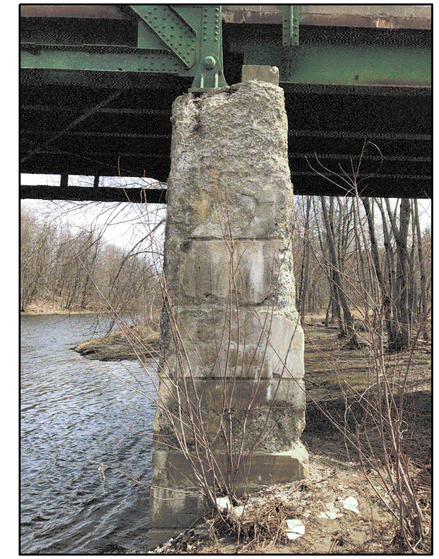

PB

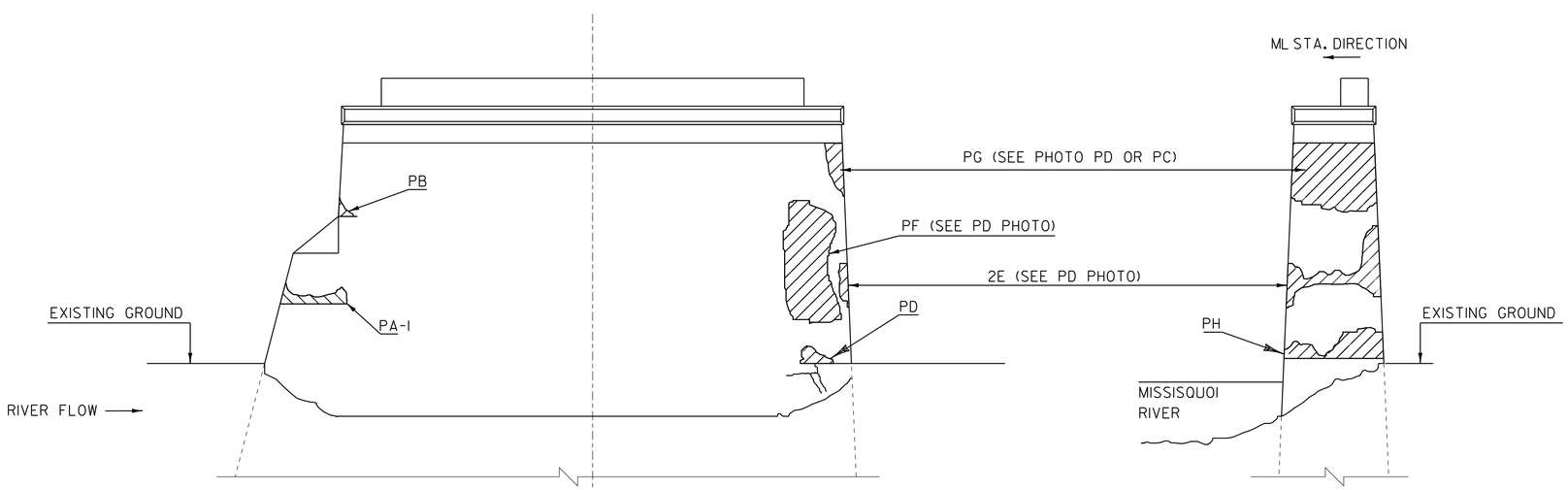

PIER ELEVATION (VIEW #1)

SCALE 1/4" = 1'-0"

PIER ELEVATION END

SCALE 1/4" = 1'-0"

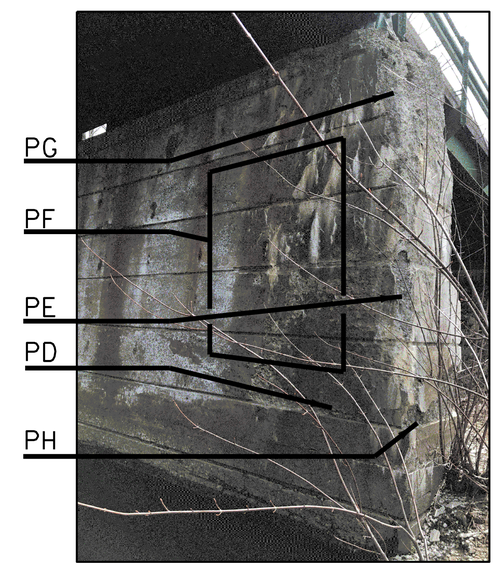

PROJECT NAME: RICHFORD-SUTTON, PQ	
PROJECT NUMBER: BHF 0814(1)	
FILE NAME: s10c222sub.dgn	PLOT DATE: 26-SEP-2017
PROJECT LEADER: C. CARLSON	DRAWN BY: G. ROKES
DESIGNED BY: C. BURRALL	CHECKED BY: C. BURRALL
PIER CONCRETE REPAIR 1	SHEET 59 OF 87

PE

PF

PG

PA-2

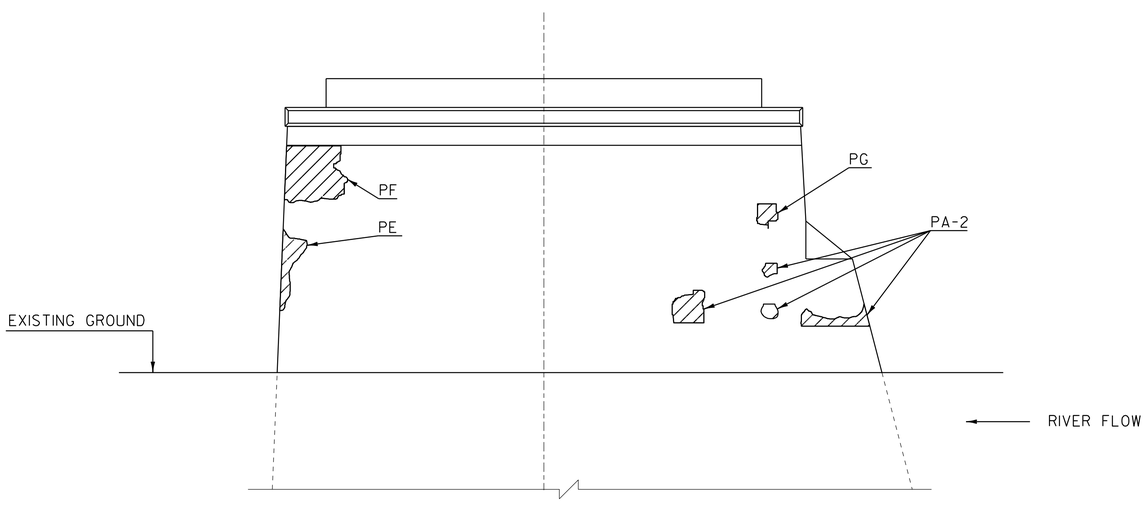

PIER ELEVATION (VIEW #2)

SCALE 1/4" = 1'-0"

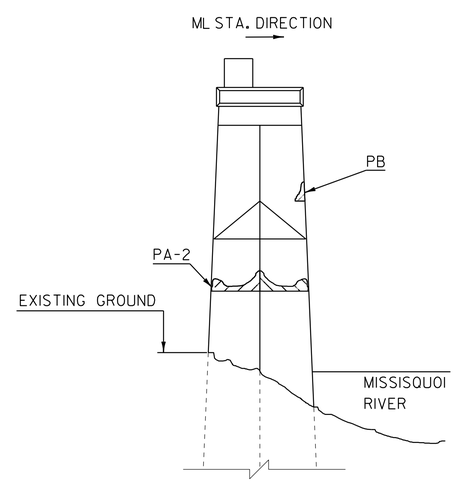

PIER ELEVATION NOSE

SCALE 1/4" = 1'-0"

PROJECT NAME: RICHFORD-SUTTON, PQ	
PROJECT NUMBER: BHF 0814(1)	
FILE NAME: s10c222sub.dgn	PLOT DATE: 26-SEP-2017
PROJECT LEADER: C. CARLSON	DRAWN BY: G. ROKES
DESIGNED BY: C. BURRALL	CHECKED BY: C. BURRALL
PIER CONCRETE REPAIR 2	SHEET 60 OF 87

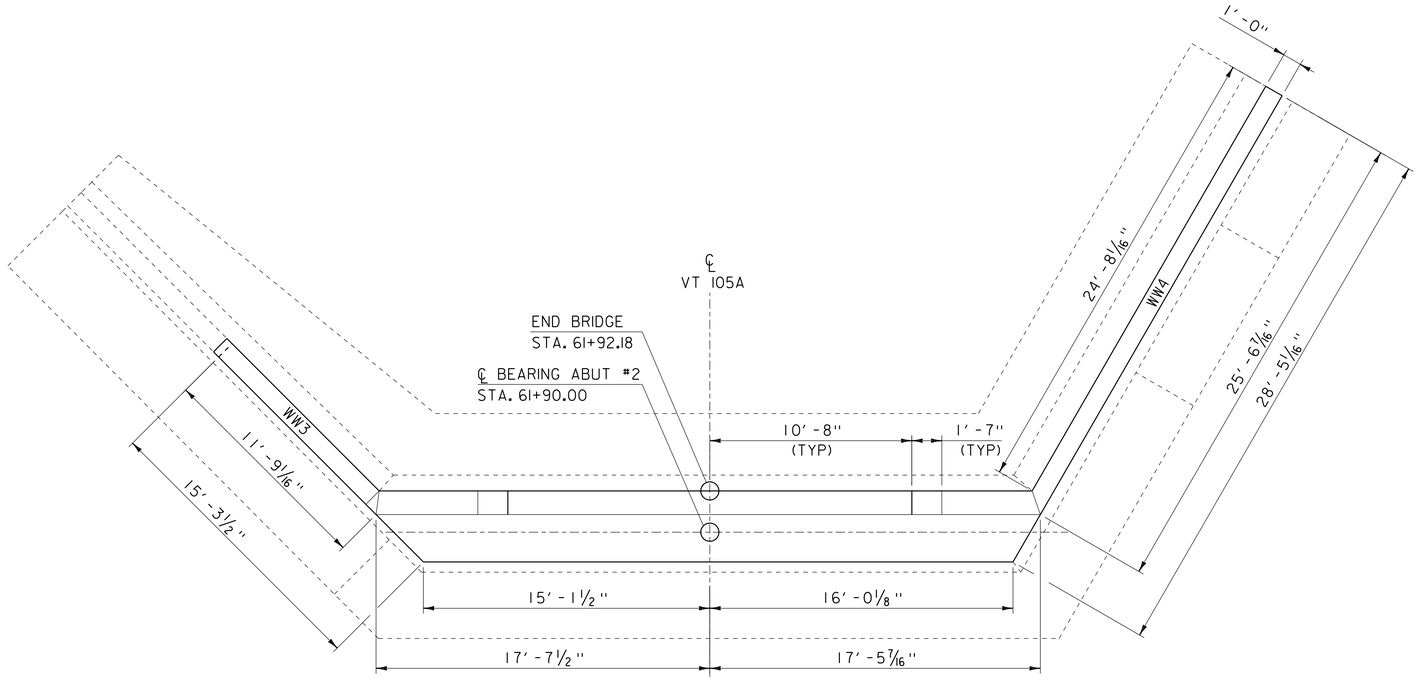

ABUTMENT NO.2 PLAN

SCALE 1/4" = 1'-0"

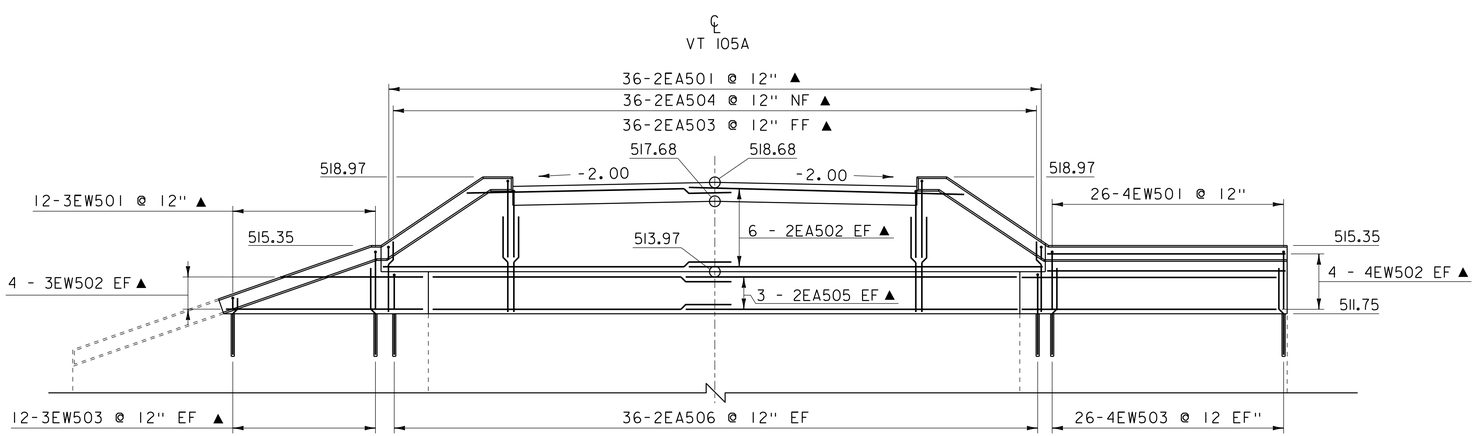

ABUTMENT NO.2 ELEVATION

SCALE 1/4" = 1'-0"

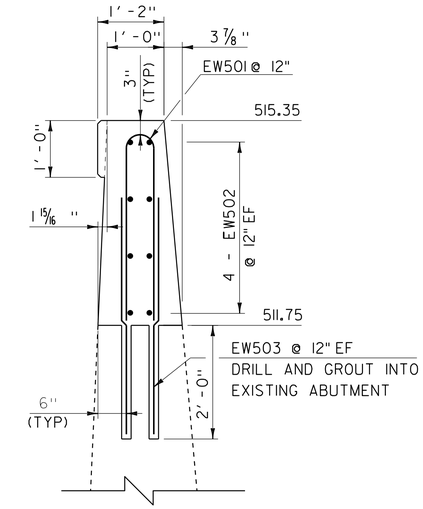

WINGWALL 3 & 4 TYPICAL

SCALE 3/4" = 1'-0"

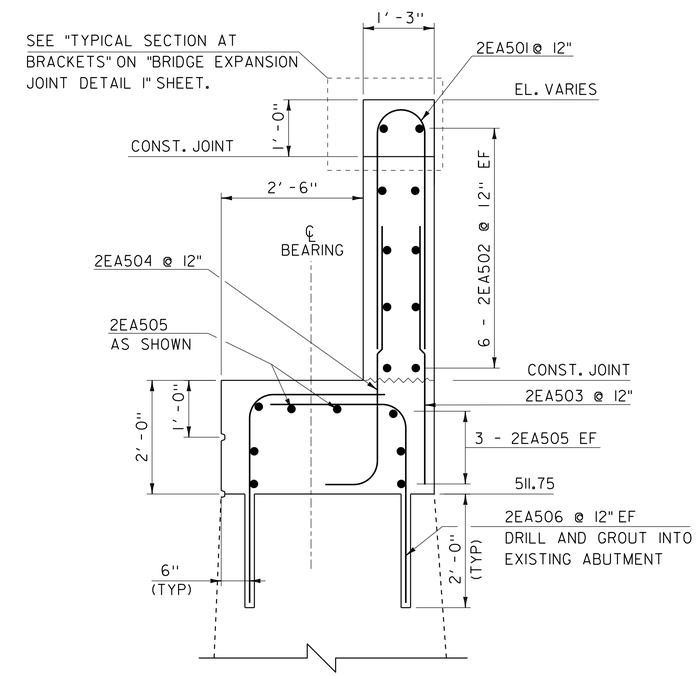

ABUTMENT 2 TYPICAL

SCALE 3/4" = 1'-0"

NOTE:

NF = NEAR FACE
FF = FAR FACE
EF = EACH FACE
▲ = CUT TO FIT IN FIELD
3" CLEAR, UNLESS OTHERWISE SPECIFIED ON THE PLANS.
2'-2" BAR LAP UNLESS OTHERWISE SPECIFIED ON THE PLANS.

PROJECT NAME: RICHFORD-SUTTON, PQ	
PROJECT NUMBER: BHF 0814(1)	
FILE NAME: s10c222sub.dgn	PLOT DATE: 26-SEP-2017
PROJECT LEADER: C. CARLSON	DRAWN BY: G. ROKES
DESIGNED BY: C. BURRALL	CHECKED BY: C. BURRALL
ABUTMENT #2 CAP DETAILS	SHEET 61 OF 87

2A

2C

2E

2B

2D

2F

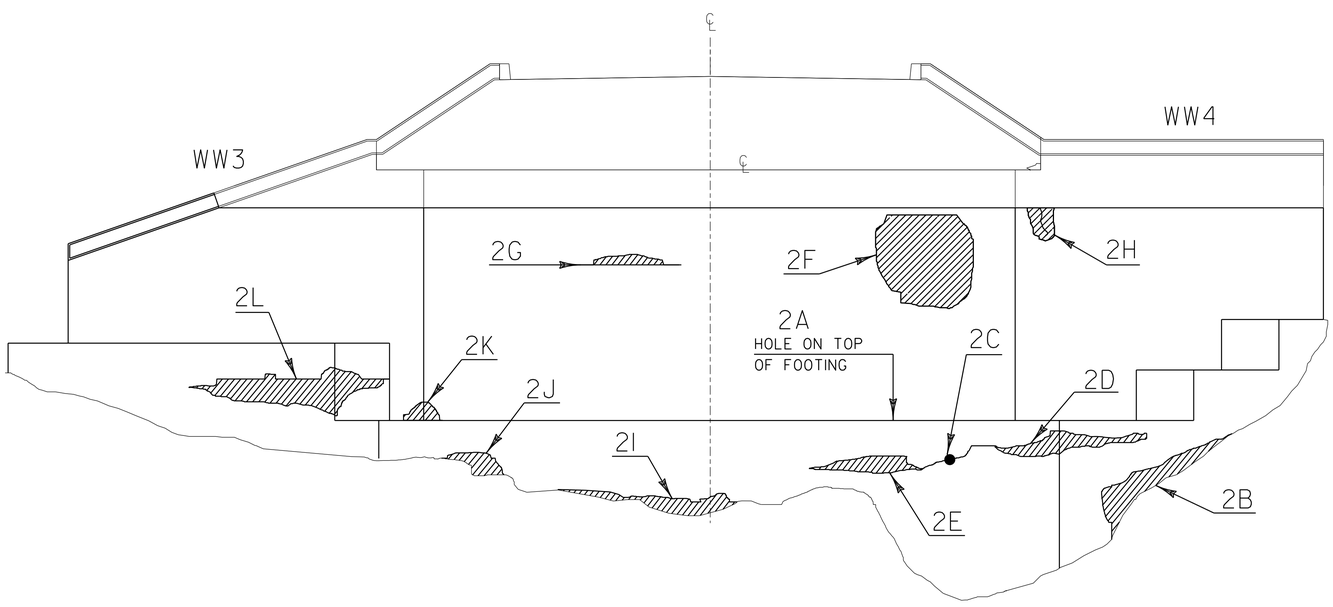

ABUTMENT #2 ELEVATION

SCALE 1/4" = 1'-0"

SUBSTRUCTURE NOTES

1. ALL SUBSTRUCTURE REPAIR WORK SHALL INCLUDE REMOVAL OF UNSOUND AND DELAMINATED CONCRETE AS DIRECTED BY THE ENGINEER AND REPAIRED IN ACCORDANCE WITH ITEMS 580.14, "REPAIR OF CONCRETE SUBSTRUCTURE SURFACE, CLASS II" AND ITEM 580.15, "REPAIR OF CONCRETE SUBSTRUCTURE SURFACE, CLASS III"

2. THE PREPARED SURFACES SHALL BE THOROUGHLY SANDBLASTED TO REMOVE ALL LOOSE MATERIAL AND ANY CONTAMINANTS OR EFFLORESCENCE. THE REINFORCING STEEL (IF EXPOSED) SHALL BE SANDBLASTED. THE MATERIAL USED TO FILL A PATCH SHALL BE PLACED AND FINISHED OR FORMED SO THAT THE FINAL SURFACE WILL HAVE THE SAME SCORE MARKS AND EXTERIOR FACE APPEARANCE AS THE ORIGINAL BEING REPAIRED. THE SURFACE SHALL BE THOROUGHLY WETTED PRIOR TO PLACEMENT OF PATCHING MATERIAL OR NEW CONCRETE. IMMEDIATELY PRIOR TO PLACEMENT, THE SURFACE SHALL BE COATED WITH NEAT CEMENT PASTE, MIXED TO THE CONSISTENCY OF THICK LATEX PAINT (THOROUGHLY BRUSHED INTO THE SURFACE). WHEN "OVERHEAD AND VERTICAL CONCRETE REPAIR MATERIAL" CONFORMING TO SUBSECTION 780.02 IS USED, THE BONDING AGENT (IF ANY REQUIRED) AND ITS APPLICATION PROCEDURE SHALL COMPLY WITH THE REQUIREMENTS OF THE PATCHING MATERIAL MANUFACTURER.

3. A QUANTITY OF ITEMS 580.14 AND 580.15 HAVE BEEN INCLUDED IN THE CONTRACT DOCUMENTS. THE RESIDENT ENGINEER WILL DETERMINE THE COMPETENCY OF THE SUBSTRUCTURE CONCRETE AND DETERMINE THE EXACT AREAS AND LEVEL OF REPAIR NEEDED. THE PICTURES ON THIS SHEET REPRESENT THE EXISTING CONDITION OF THE SUBSTRUCTURES BUT DO NOT SHOW ALL THE AFFECTED AREAS. THE ELEVATION VIEWS OF THE SUBSTRUCTURES SHOWN ARE ONLY ESTIMATES OF THE REPAIR AREA.

4. ITEM 501.35 "CONCRETE, HIGH PERFORMANCE CLASS SCC" SHALL BE USED TO FILL SCOUR HOLES BETWEEN THE FOOTING OF ABUTMENT #2 AND THE LEDGE. AREAS 2B, 2I, AND 2J SHOWN ARE MINIMUM ESTIMATED SCOUR AREAS REQUIRING REPAIRS USING ITEM 501.35. ADDITIONAL SCOUR REPAIRS MAY BE DEEMED NECESSARY BY THE ENGINEER.

PROJECT NAME: RICHFORD-SUTTON, PQ	
PROJECT NUMBER: BHF 0814(1)	
FILE NAME: s10c222sub.dgn	PLOT DATE: 26-SEP-2017
PROJECT LEADER: C. CARLSON	DRAWN BY: G. ROKES
DESIGNED BY: C. BURRALL	CHECKED BY: C. BURRALL
ABUTMENT #2 CONCRETE REPAIR I	SHEET 62 OF 87

2G

2I

2K

2H

2J

2L

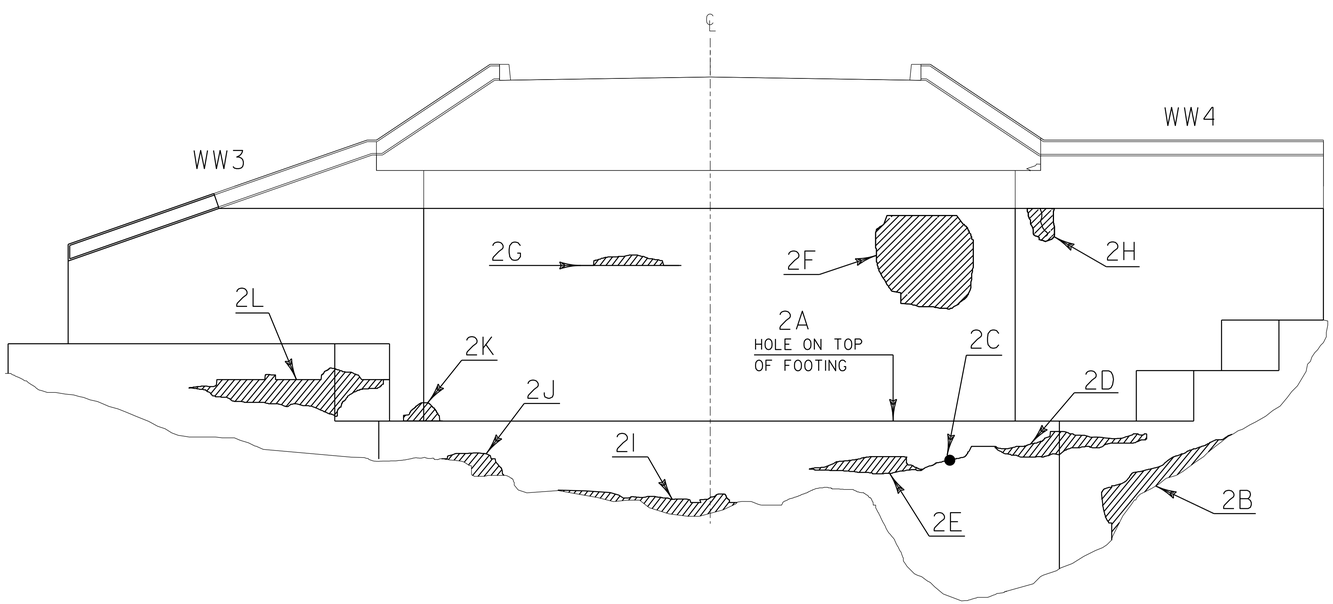

ABUTMENT #2 ELEVATION

SCALE 1/4" = 1'-0"

PROJECT NAME: RICHFORD-SUTTON, PQ	
PROJECT NUMBER: BHF 0814(1)	
FILE NAME: s10c222sub.dgn	PLOT DATE: 26-SEP-2017
PROJECT LEADER: C. CARLSON	DRAWN BY: G. ROKES
DESIGNED BY: C. BURRALL	CHECKED BY: C. BURRALL
ABUTMENT #2 CONCRETE REPAIR 2	SHEET 63 OF 87

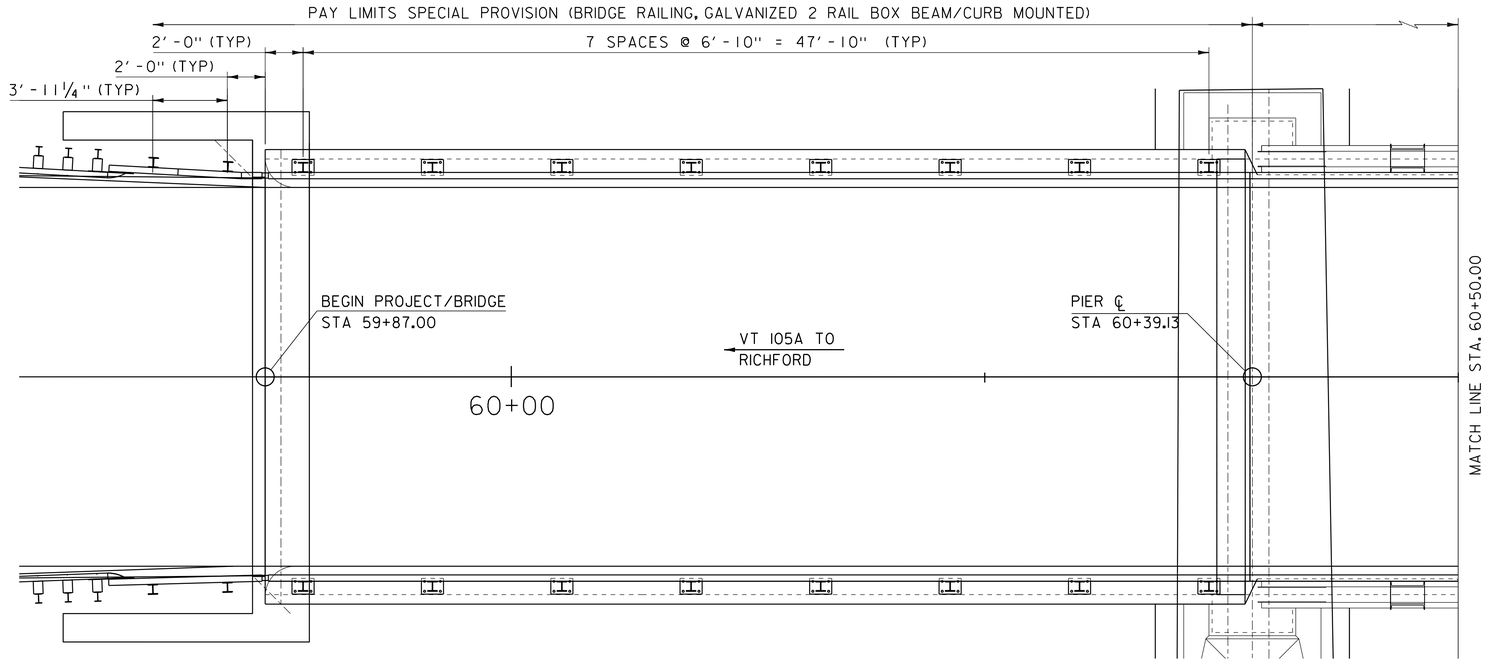

APPROACH SPAN BRIDGE RAIL PLAN

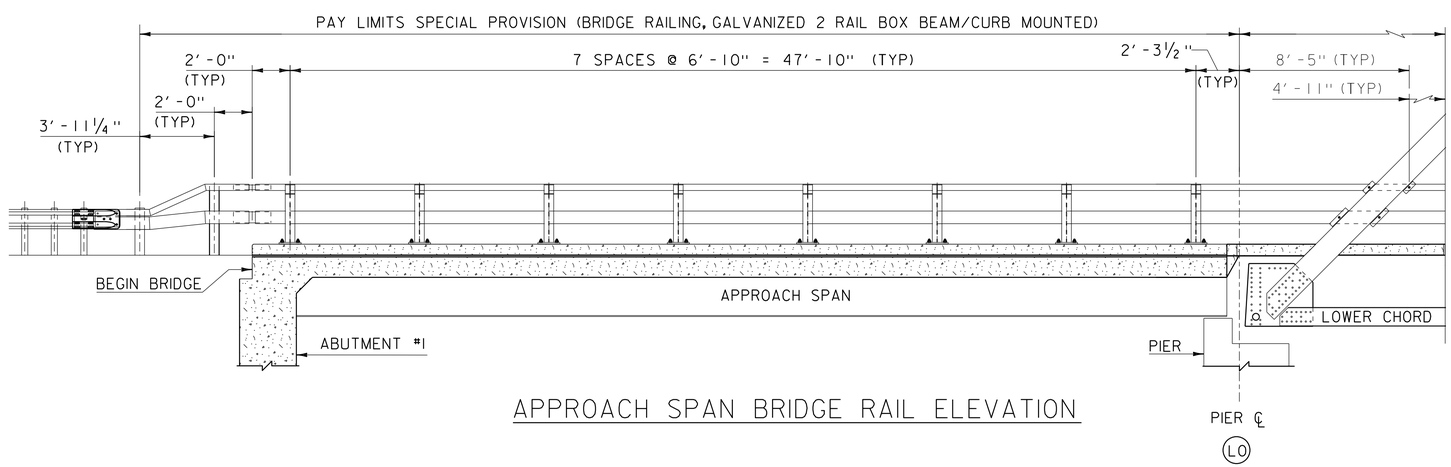

APPROACH SPAN BRIDGE RAIL ELEVATION

PROJECT NAME: RICHFORD-SUTTON, PQ	
PROJECT NUMBER: BHF 0814(1)	
FILE NAME: s10c222rail.dgn	PLOT DATE: 26-SEP-2017
PROJECT LEADER: C. CARLSON	DRAWN BY: G. ROKES
DESIGNED BY: C. BURRALL	CHECKED BY: C. BURRALL
BRIDGE RAIL PLAN AND ELEVATION 1	SHEET 64 OF 87

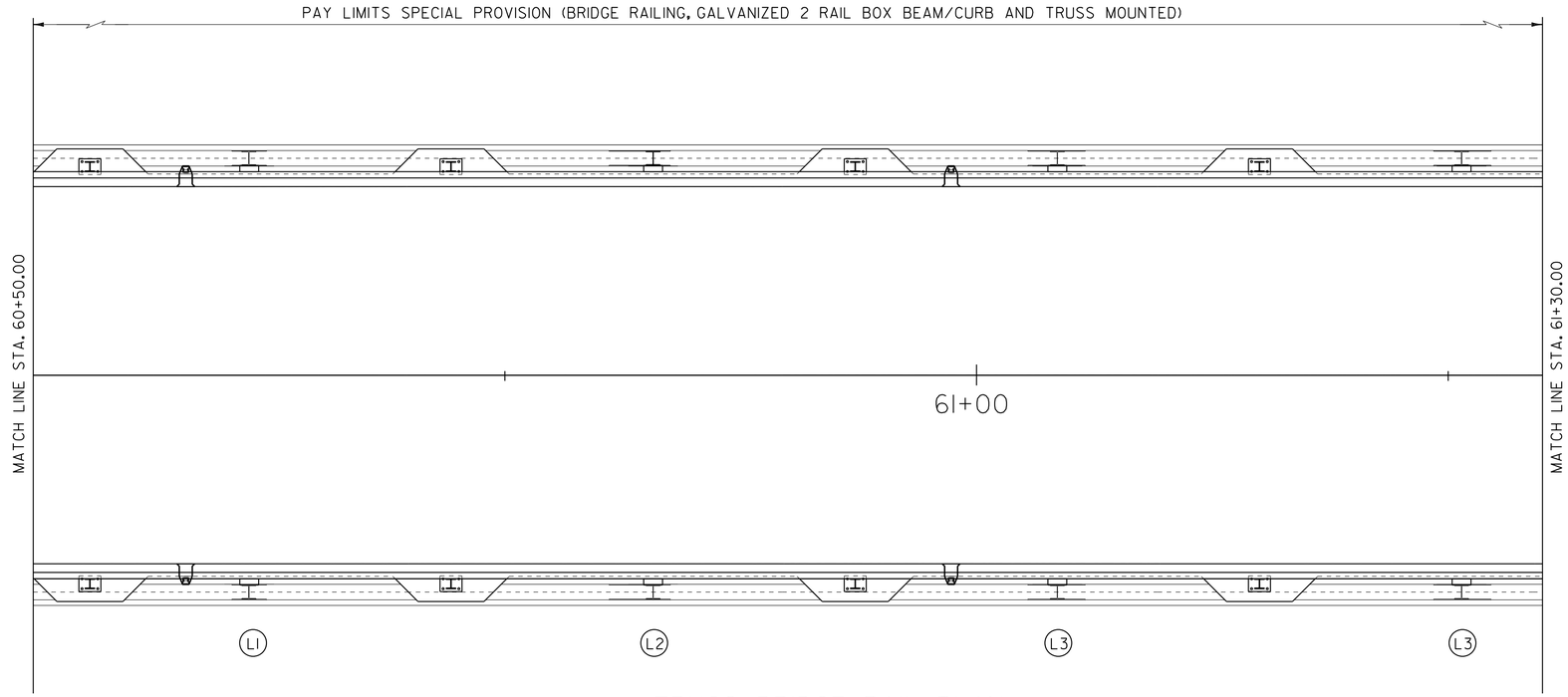

TRUSS BRIDGE RAIL PLAN

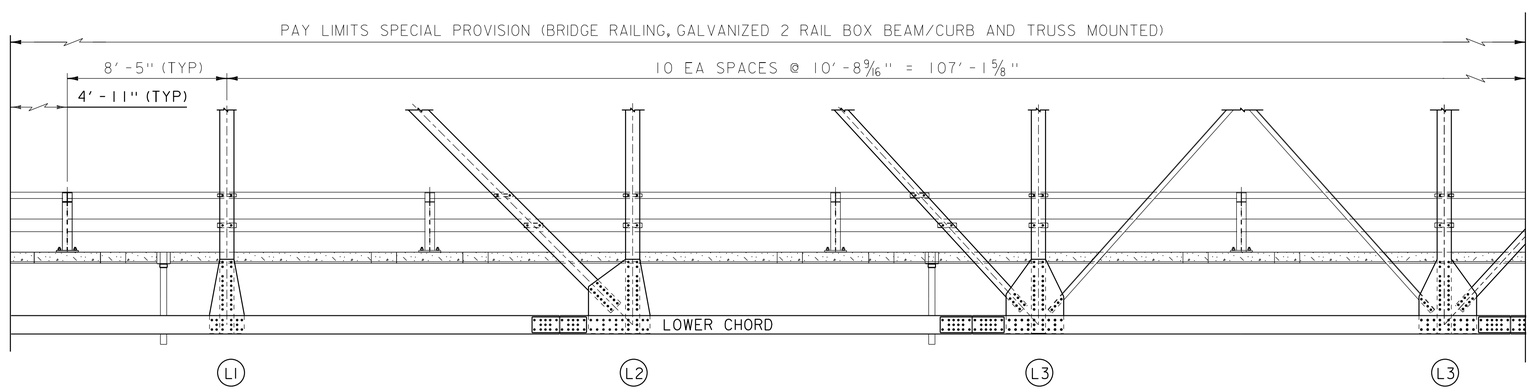

TRUSS BRIDGE RAIL ELEVATION

PROJECT NAME: RICHFORD-SUTTON, PQ	
PROJECT NUMBER: BHF 0814(1)	
FILE NAME: s10c222rail.dgn	PLOT DATE: 26-SEP-2017
PROJECT LEADER: C. CARLSON	DRAWN BY: G. ROKES
DESIGNED BY: C. BURRALL	CHECKED BY: C. BURRALL
BRIDGE RAIL PLAN AND ELEVATION 2	SHEET 65 OF 87

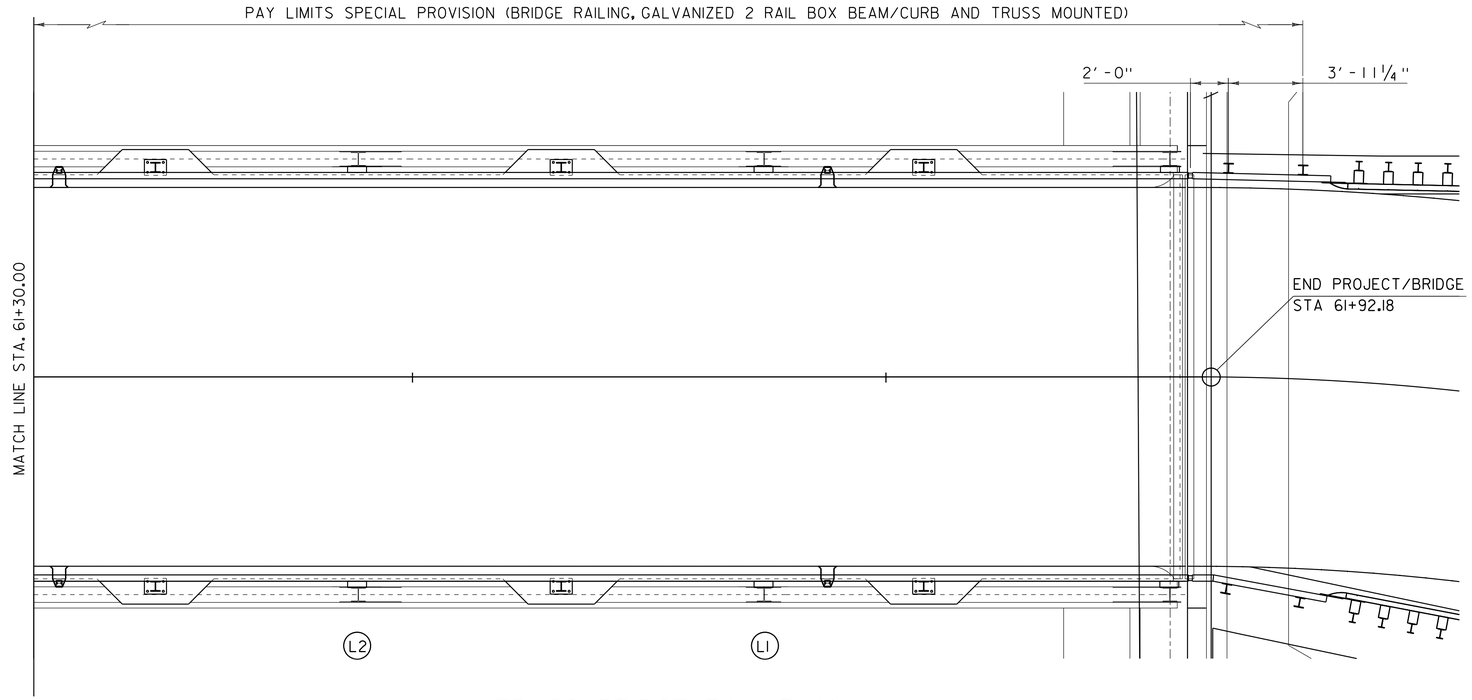

TRUSS BRIDGE RAIL PLAN

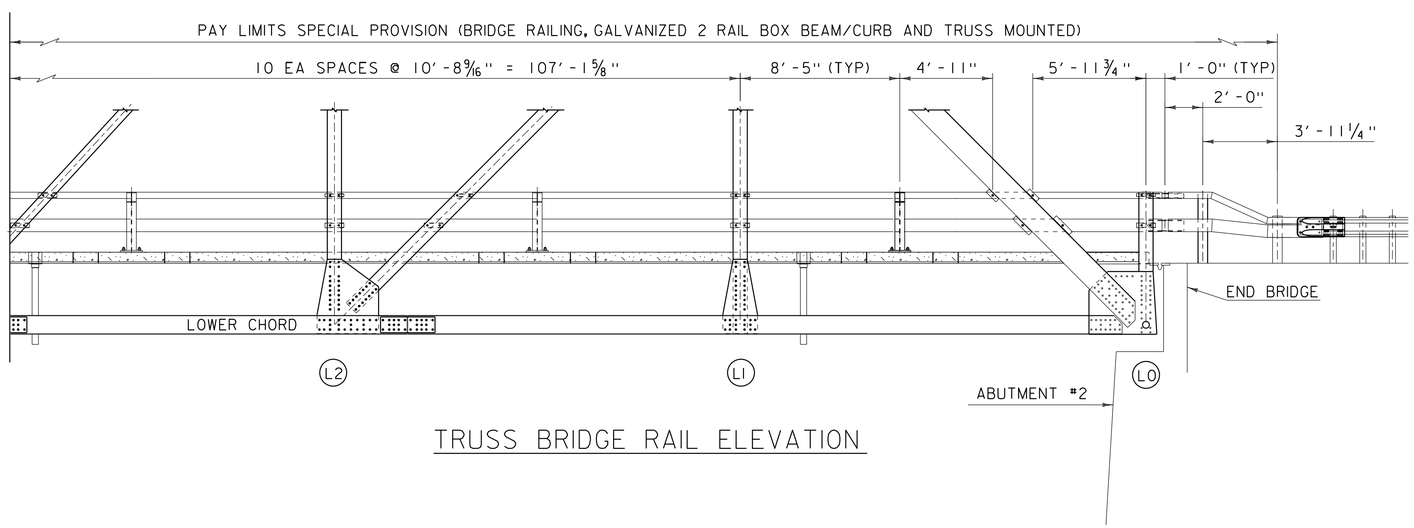

TRUSS BRIDGE RAIL ELEVATION

PROJECT NAME: RICHFORD-SUTTON, PQ	
PROJECT NUMBER: BHF 0814(1)	
FILE NAME: s10c222rail.dgn	PLOT DATE: 26-SEP-2017
PROJECT LEADER: C. CARLSON	DRAWN BY: G. ROKES
DESIGNED BY: C. BURRALL	CHECKED BY: C. BURRALL
BRIDGE RAIL PLAN AND ELEVATION 3	SHEET 66 OF 87

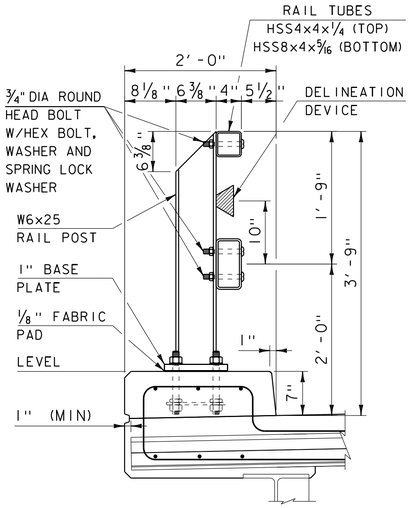

APPROACH SPAN BRIDGE RAIL AND TRUSS BRIDGE RAIL BETWEEN L0, L1, L2, L3 TYPICAL SECTION

SCALE 1" = 1'-0"

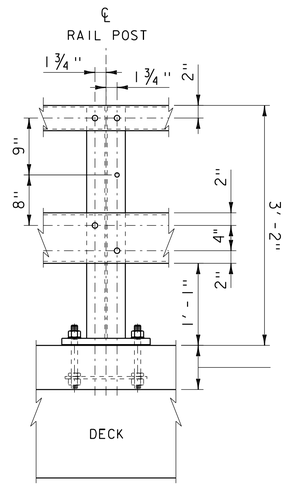

ELEVATION

SCALE 1" = 1'-0"

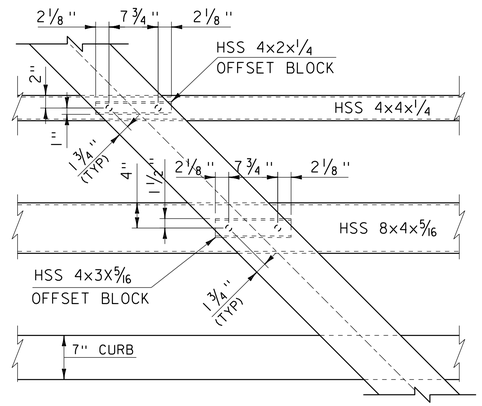

BRIDGE RAIL TO TRUSS DIAGONAL ELEVATION

SCALE 1" = 1'-0"

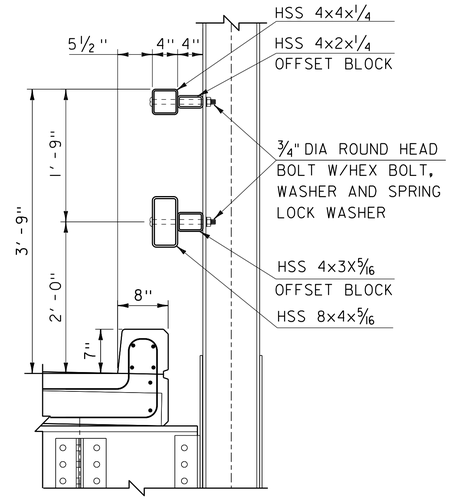

BRIDGE RAIL TO TRUSS VERTICAL/DIAGONAL TYPICAL SECTION

SCALE 1" = 1'-0"

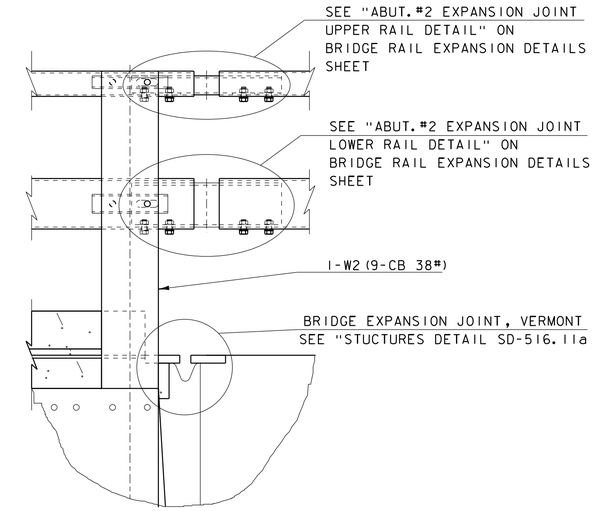

LAST BRIDGE RAIL POST AT ABUT #2

SCALE 1" = 1'-0"

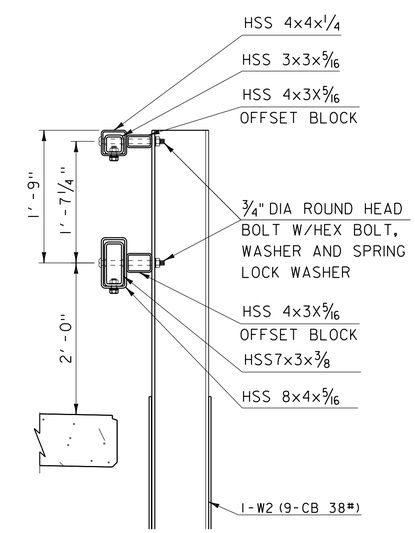

LAST BRIDGE RAIL POST AT ABUT #2 SECTION

SCALE 1" = 1'-0"

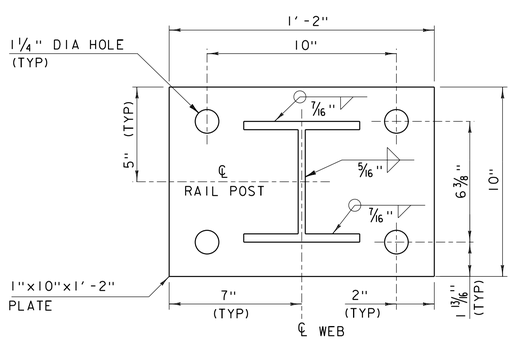

POST BASE PLATE

SCALE 3" = 1'-0"

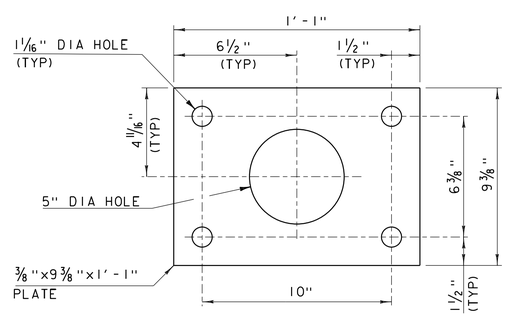

ANCHOR PLATE

SCALE 3" = 1'-0"

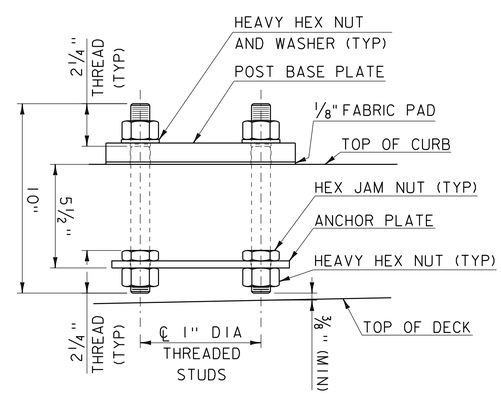

RAIL POST ANCHORAGE

SCALE 3" = 1'-0"

PROJECT NAME: RICHFORD-SUTTON, PQ	
PROJECT NUMBER: BHF 0814(1)	
FILE NAME: s10c222rail.dgn	PLOT DATE: 26-SEP-2017
PROJECT LEADER: C. CARLSON	DRAWN BY: G. ROKES
DESIGNED BY: C. BURRALL	CHECKED BY: C. BURRALL
BRIDGE RAIL DETAILS	SHEET 67 OF 87

NOTE: APPROACH SPAN BRIDGE RAIL AND TRUSS BRIDGE RAIL BETWEEN L0,L1,2,L3 REQUIRE 6" LONG ROUND HEAD BOLTS. BRIDGE RAIL CONNECTED TO TRUSS VERTICALS AND DIAGONALS REQUIRE 10" LONG ROUND HEAD BOLTS

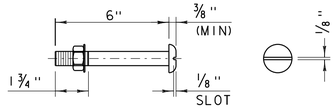

3/4" DIA A449 (TYPE 1) ROUND HEAD BOLT

(WITH WASHER AND PREVAILING TORQUE TYPE LOCK NUT) (SEE NOTE #8)
ONLY FULL DIAMETER BODY BOLTS WILL BE ALLOWED.
NTS

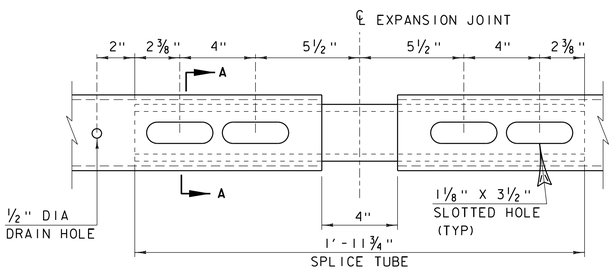

ABUT #1 EXPANSION JOINT DETAIL
ABUT #2 EXPANSION JOINT SIMILAR

SCALE 3" = 1'-0"
(BOTTOM VIEW)

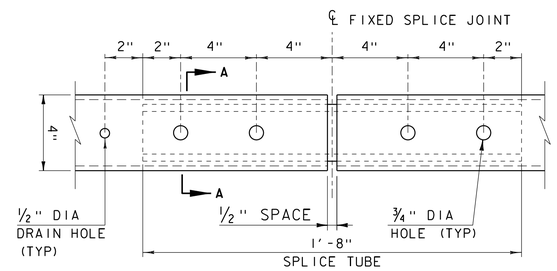

FIXED SPLICE JOINT DETAIL

SCALE 3" = 1'-0"
(BOTTOM VIEW)

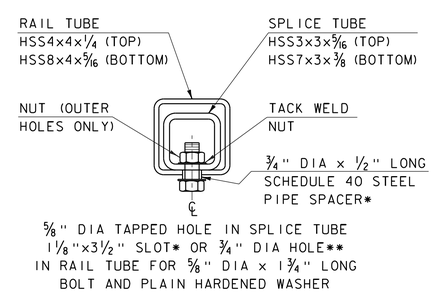

A-A RAIL TUBE SPLICE AND RAIL EXPANSION JOINT SECTION

*EXPANSION JOINT **SPLICE
NTS

NOTES:

1. ALL WORK AND MATERIALS SHALL CONFORM TO SECTION 525.
2. PRIOR TO GALVANIZING THE ASSEMBLED POST, GRIND ALL EDGES TO A MINIMUM RADIUS OF 1/16".
3. ALL POSTS SHALL BE SET NORMAL TO GRADE.
4. SECTIONS OF RAIL TUBE SHALL BE ATTACHED TO A MINIMUM OF TWO BRIDGE RAIL POSTS AND PREFERABLY TO AT LEAST FOUR POSTS.
5. RAIL TUBE EXPANSION JOINTS SHALL BE PROVIDED IN ANY RAIL BAY SPANNING THE END OF AN INTEGRAL ABUTMENT BRIDGE AND AT ALL SUPERSTRUCTURE EXPANSION JOINTS. EXPANSION JOINT WIDTH SHALL BE 4" AT 68°F AND WILL BE ADJUSTED IN THE FIELD BY THE ENGINEER FOR OTHER TEMPERATURES.
6. HOLES IN RAILS FOR RAIL TUBE ATTACHMENT MAY BE FIELD-DRILLED. HOLES SHALL BE COATED WITH AN APPROVED ZINC-RICH PAINT PRIOR TO INSTALLATION.
7. RAIL POST ANCHORING NUTS SHALL BE TIGHTENED TO A SNUG FIT AND GIVEN AN ADDITIONAL ONE-EIGHTH TURN.
8. RAIL TUBES SHALL BE ATTACHED USING 3/4" FULL DIAMETER BODY ASTM A 449 (TYPE 1) ROUND HEAD BOLTS INSERTED THROUGH THE FACE OF THE TUBE. HOLES IN POSTS SHALL BE 1/16" LARGER THAN THE BOLT SIZE.
9. ANY BENDING OF RAIL SHALL BE DONE AT A FABRICATION PLANT ACCORDING TO A PROCEDURE PROVIDED BY THE FABRICATOR.
10. THE MINIMUM DISTANCE FROM THE POST TO AN EXPANSION JOINT SHALL BE DETERMINED BY THE MINIMUM EDGE DISTANCE OF 5" FROM ANY ANCHOR STUD TO THE END OF THE SLAB, OR TO THE EXPANSION JOINT RECESS POUR, IF ONE IS USED.
11. SEE STANDARD DRAWING G-1 FOR DETAILS OF DELINEATORS. A DELINEATOR SHALL BE INSTALLED AT 30 FOOT SPACING OR THE NEAREST POST. WHITE IS TO BE INSTALLED ON THE DRIVER'S RIGHT. FOR ONE WAY BRIDGES, YELLOW IS TO BE INSTALLED ON THE DRIVER'S LEFT. PAYMENT SHALL BE INCIDENTAL TO OTHER ITEMS.
12. THIS RAILING MEETS THE REQUIREMENTS FOR A TL-4 SERVICE LEVEL.

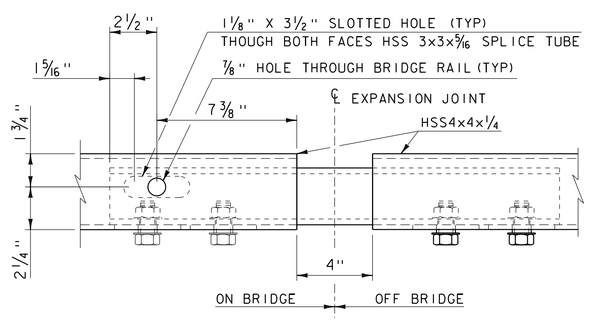

ABUT. #2 EXPANSION JOINT UPPER RAIL DETAIL

SCALE 3" = 1'-0"
(ELEVATION VIEW)

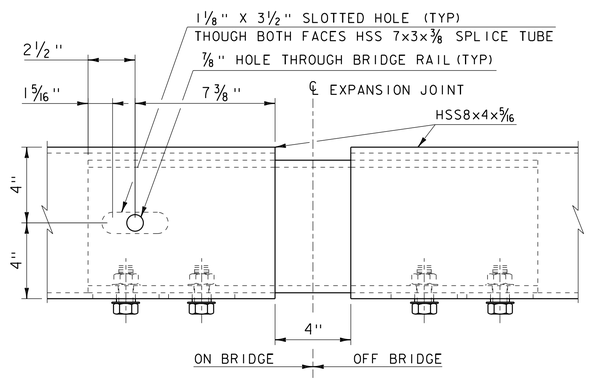

ABUT. #2 EXPANSION JOINT LOWER RAIL DETAIL

SCALE 3" = 1'-0"
(ELEVATION VIEW)

PROJECT NAME: RICHFORD-SUTTON, PQ	
PROJECT NUMBER: BHF 0814(1)	
FILE NAME: s10c222rail.dgn	PLOT DATE: 26-SEP-2017
PROJECT LEADER: C. CARLSON	DRAWN BY: G. ROKES
DESIGNED BY: C. BURRALL	CHECKED BY: C. BURRALL
BRIDGE RAIL EXPANSION DETAILS	SHEET 68 OF 87

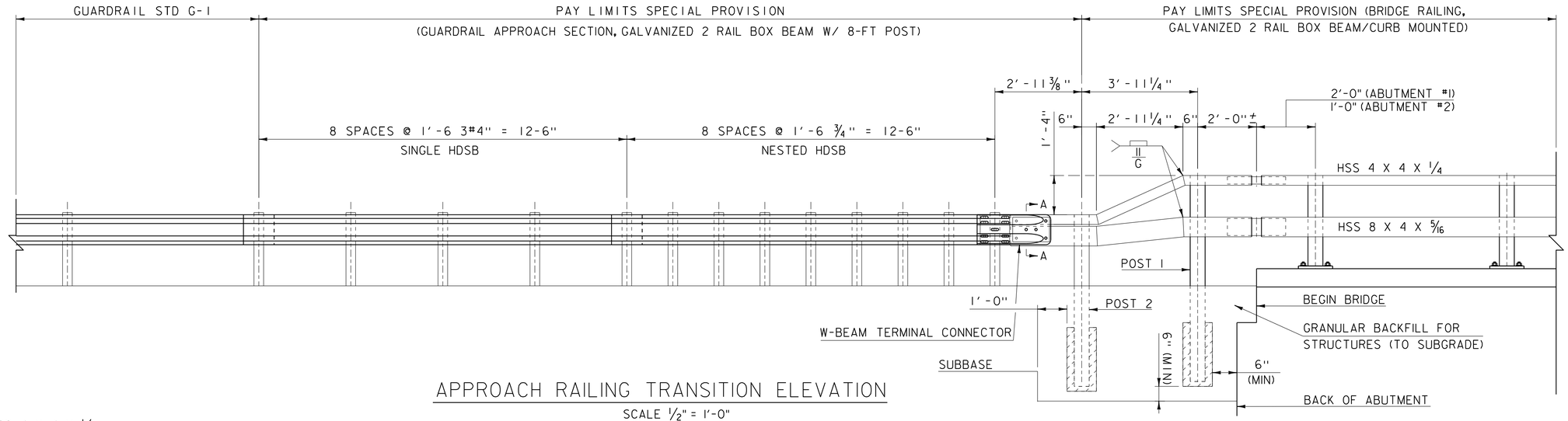

APPROACH RAILING TRANSITION ELEVATION

SCALE 1/2" = 1'-0"

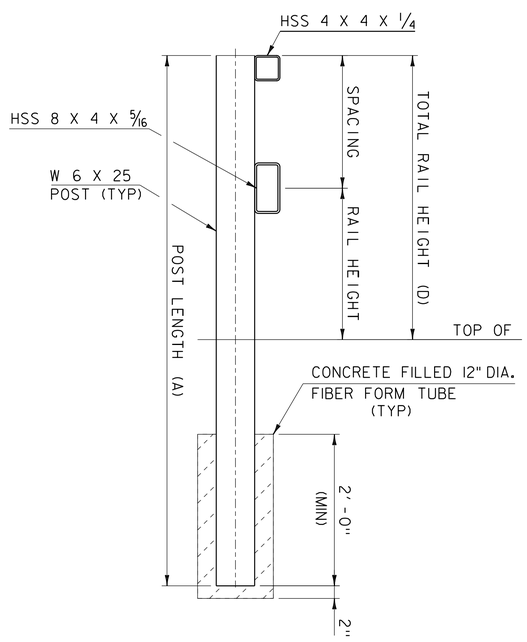

TRANSITION POST TYPICAL

SCALE 1" = 1'-0"

POST	POST LENGTH (A)	RAIL HEIGHT (B)	RAIL SPACING (C)	TOTAL RAIL HEIGHT (D)
1	7'-0"	2'-0"	1'-9"	3'-9"
2	5'-10"	1'-8 1/4"	8 3/4"	2'-5"

TRANSITION POSTS TABLE

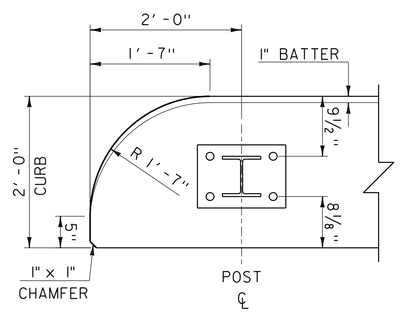

END CURB TYPICAL

SCALE 1" = 1'-0"

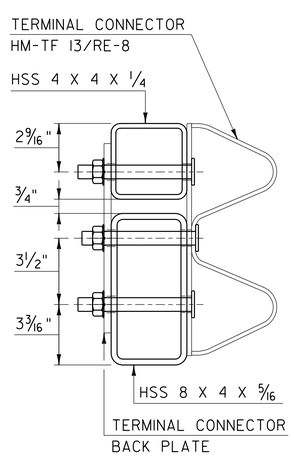

SECTION A - A

SCALE 3" = 1'-0"

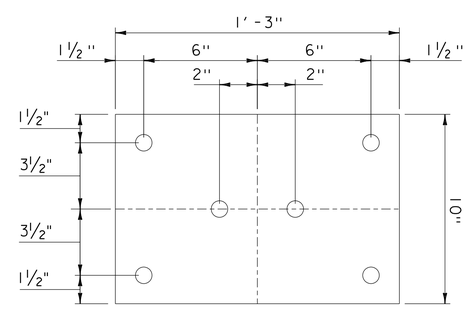

TERMINAL CONNECTOR BACK PLATE

SCALE 3" = 1'-0"

NOTES:

1. PAYMENT FOR SPECIAL PROVISION (GUARDRAIL APPROACH SECTION, GALVANIZED 2 RAIL BOX BEAM W/ 8-FT POST), SHALL INCLUDE THE TERMINAL CONNECTOR, THE CONNECTION PLATE, RAIL, POSTS, BLOCKS AND ATTACHMENT HARDWARE.
2. TO FACILITATE FIELD FIT-UP OF THE TRANSITION RAILING, POSTS SHALL BE SET LOOSELY INTO FIBER FORM TUBES WHILE TRANSITION PARTS ARE BEING ASSEMBLED. POST HOLES SHALL BE BACKFILLED WITH A CONCRETE MIX APPROVED BY THE ENGINEER. PAYMENT FOR COMPONENTS, INCLUDING BACKUP PLATE AND END TERMINAL CONNECTOR FOR GUARDRAIL, AUGERING, FIBER FORM TUBES AND CONCRETE, AND INSTALLATION SHALL BE CONSIDERED INCIDENTAL TO SPECIAL PROVISION (BRIDGE RAILING, GALVANIZED 2 RAIL BOX BEAM, CURB MOUNTED) AND SPECIAL PROVISION (BRIDGE RAILING, GALVANIZED 2 RAIL BOX BEAM, CURB AND TRUSS MOUNTED).
3. THE RETROREFLECTIVE MATERIAL IS TO BE ERECTED EVERY 30' (OR CLOSEST POST) WITH A 5/8" DIAMETER BOLT AND SHALL MEET REQUIREMENTS OF SUBSECTION 750.08 AND SHALL BE A 0.063" ALUMINUM BACKING WHITE REFLECTOR.
4. ALL APPROACH RAIL SPLICES SHALL BE LAPPED IN THE DIRECTION OF TRAFFIC FLOW.
5. TUBE AND STEEL POST MATERIALS, DIMENSION SIZES AND NOTES SHALL BE THE SAME AS THOSE OF THE BRIDGE RAIL, UNLESS OTHERWISE NOTED.
6. APPROACH RAIL BOLTS SHALL BE ASTM A307 GRADE A AND NUTS SHALL BE AASHTO M291 (ASTM A563 GRADE A OR BETTER) (GALVANIZED). WASHERS SHALL BE ASTM F844.
7. WELD TOP SPLICE BAR TO FIT BEND. USE COMPLETE PENETRATION WELD (B-U2).
8. PRIOR TO GALVANIZING, GRIND ALL EDGES TO A MINIMUM RADIUS OF 1/16".
9. SEE STANDARD G-1 AND G-1d FOR ADDITIONAL INFORMATION.

PROJECT NAME: RICHFORD-SUTTON, PQ
PROJECT NUMBER: BHF 0814(1)

FILE NAME: s10c222rail.dgn
PROJECT LEADER: C. CARLSON
DESIGNED BY: C. BURRALL
APPROACH RAIL DETAILS

PLOT DATE: 26-SEP-2017
DRAWN BY: G. ROKES
CHECKED BY: C. BURRALL
SHEET 69 OF 87

STATE OF VERMONT
AGENCY OF TRANSPORTATION

REINFORCING STEEL SCHEDULE

ITEM	EACH	SIZE	LENGTH	MARK	TYPE	A	B	C	D	E	F	G	H	J	K	R	O
	APPROACH SLAB																
▲	18	5	20'- 9"	1EAS501	STR	20'- 9"											
	22	5	4'- 0"	1EAS502	1	0'- 7"	3'- 5"					---		0'- 5"			
✳	23	9	15'- 9"	1EAS901	1	1'- 3"	14'- 6"					---		1'- 0"			
	ABUTMENT 1																
	25	5	27'- 6"	1A501	STR	27'- 6"											
	14	5	14'- 10"	1EA501	STR	14'- 10"											
✳	57	5	9'- 7"	1A502	17		2'- 7"	7'- 0"	---								
✳ ▲	57	5	5'- 11"	1EA502	STR	5'- 11"											
	56	5	6'- 11"	1A503	S10		2'- 2"	2'- 7"	2'- 2"								
	16	5	4'- 4"	1A504	17		2'- 2"	2'- 2"	---								
	8	5	4'- 4"	1EA504	17		2'- 2"	2'- 2"	---								
	25	5	4'- 2"	1EA505	22		1'- 1"	2'- 0"	1'- 1"				1'- 6"	1'- 6"	1'- 6"	1'- 6"	
✳	51	7	9'- 7"	1A701	17		2'- 7"	7'- 0"	---								
✳	51	7	7'- 5"	1EA701	17		1'- 11"	5'- 6"	---								
	24	7	15'- 6"	1EA702	17		3'- 0"	12'- 6"	---								
	WINGWALL 1																
▲	25	5	10'- 9"	1EW501	STR	10'- 9"											
	8	5	12'- 6"	1W502	STR	12'- 6"											
	4	5	12'- 6"	1EW502	STR	12'- 6"											
	11	5	5'- 5"	1EW503	S10		2'- 2"	1'- 1"	2'- 2"								
	8	7	12'- 6"	1W701	STR	12'- 6"											
	4	7	12'- 6"	1EW701	STR	12'- 6"											
	WINGWALL 2																
▲	25	5	10'- 9"	2EW501	STR	10'- 9"											
	8	5	12'- 6"	2W502	STR	12'- 6"											
	4	5	12'- 6"	2EW502	STR	12'- 6"											
	11	5	5'- 5"	2EW503	S10		2'- 2"	1'- 1"	2'- 2"								
	8	7	12'- 6"	2W701	STR	12'- 6"											
	4	7	12'- 6"	2EW701	STR	12'- 6"											
	PIER CAP																
	27	5	11'- 4"	EP501	17		4'- 0"	3'- 4"	4'- 0"								
	23	5	11'- 4"	EP502	S10		5'- 3"	0'- 10"	5'- 3"								
	6	5	17'- 2"	EP503	17		6'- 8"	3'- 10"	6'- 8"								
	4	5	10'- 2"	EP504	17		4'- 7"	1'- 0"	4'- 7"								
	3	5	26'- 8"	EP505	STR	26'- 8"											
	10	5	17'- 8"	EP506	STR	17'- 8"											
	ABUTMENT 2																
▲	36	5	9'- 10"	2EA501	S10		4'- 6"	0'- 10"	4'- 6"								
▲	24	5	18'- 5"	2EA502	STR	18'- 5"											
▲	36	5	4'- 5"	2EA503	STR	4'- 5"											
▲	36	5	5'- 4"	2EA504	17		0'- 11"	4'- 5"	---								
▲	16	5	18'- 5"	2EA505	STR	18'- 5"											
	72	5	6'- 6"	2EA506	17		2'- 9"	3'- 9"	---								
	WINGWALL 3																
▲	12	5	6'- 8"	3EW501	S10		3'- 1"	0'- 6"	3'- 1"								
▲	8	5	14'- 10"	3EW502	STR	14'- 10"											
▲	24	5	4'- 5"	3EW503	STR	4'- 5"											
	WINGWALL 4																
	26	5	6'- 8"	4EW501	S10		3'- 1"	0'- 6"	3'- 1"								
▲	8	5	27'- 11"	4EW502	STR	27'- 11"											
	52	5	4'- 5"	4EW503	STR	4'- 5"											

ITEM	EACH	SIZE	LENGTH	MARK	TYPE	A	B	C	D	E	F	G	H	J	K	R	O

~ NOTES ~

1. UNLESS OTHERWISE DESIGNATED, ALL BAR REINFORCEMENT FOR CONCRETE IN SIZES UP TO AND INCLUDING NO. 18 SHALL CONFORM TO THE REQUIREMENTS OF THE "SPECIFICATIONS FOR DEFORMED BILLET-STEEL BARS FOR CONCRETE REINFORCEMENT", AASHTO M 31 (ASTM A 615-SI). ALL BARS SHALL BE GRADE 60, UNLESS OTHERWISE DESIGNATED.
2. FOR TYPICAL BENDING DETAILS, RECOMMENDED PIN DIAMETER "D" OF BENDS AND HOOKS, AND OTHER STANDARD PRACTICE, SEE CURRENT CONCRETE REINFORCING STEEL INSTITUTE "MANUAL OF STANDARD PRACTICE".
3. BARS WHICH REQUIRE MORE ACCURATE BENDING THAN STANDARD PRACTICES SHOULD HAVE LIMITS INDICATED.
4. ALL DIMENSIONS ARE OUT TO OUT OF BAR EXCEPT "A" AND "G" ON STANDARD 180 DEGREE AND 135 DEGREE HOOKS.
5. "J" DIMENSION ON 180 DEGREE HOOKS TO BE SHOWN ONLY WHERE NECESSARY TO RESTRICT HOOK SIZE. OTHERWISE, STANDARD HOOKS ARE TO BE USED.
6. "H" DIMENSION ON STIRRUPS TO BE SHOWN ONLY WHEN NECESSARY TO MAINTAIN CLEARANCES.
7. WHERE SLOPE DIFFERS FROM 45 DEGREES, DIMENSIONS "H" AND "K" MUST BE SHOWN.
8. ▲ DENOTES BARS TO BE CUT IN FIELD.
9. ✳ DENOTES ONE EXTRA BAR ADDED FOR TESTING PURPOSES.
10. △ DENOTES TWO EXTRA BARS ADDED FOR TESTING PURPOSES.
11. E IN BAR MARK PREFIX DENOTES EPOXY COATED REINFORCING STEEL.

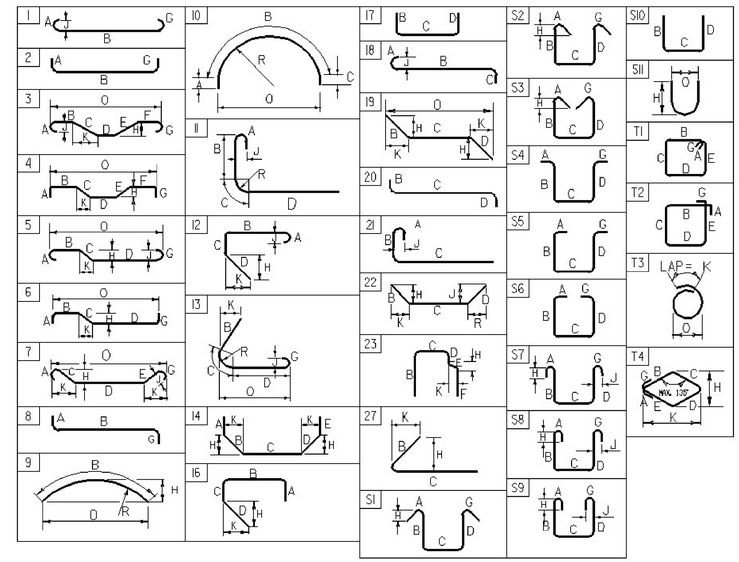

ASTM STANDARD REINFORCING BARS

BAR SIZE DESIGNATION	WEIGHT POUNDS PER FOOT	NOMINAL DIMENSIONS ROUND SECTION DIAMETER INCHES	AREA INCHES²	PERIMETER INCHES
#3	0.376	0.375	0.11	1.178
#4	0.668	0.500	0.20	1.571
#5	1.043	0.625	0.31	1.963
#6	1.502	0.750	0.44	2.356
#7	2.04	0.875	0.60	2.749
#8	2.670	1.000	0.79	3.14
#9	3.400	1.13	1.00	3.54
#10	4.3	1.270	1.27	3.990
#11	5.31	1.410	1.56	4.430
#14	7.65	1.69	2.25	5.32
#18	13.60	2.26	4.00	7.09

~ REINFORCING STEEL CORROSION RESISTANCE LEVEL ~

THE REINFORCING STEEL MARKS IN THIS SCHEDULE INDICATE THE REQUIRED BAR CORROSION RESISTANCE LEVEL. CORROSION RESISTANCE LEVEL IS DENOTED WITH A .2 FOR LEVEL TWO SUFFIX OR .3 FOR LEVEL THREE SUFFIX, .1 FOR LEVEL ONE IS TO BE OMITTED. THE BAR MATERIAL TYPE AND BAR STEEL GRADE PROVIDED FOR EACH CORROSION LEVEL WILL BE RECORDED ON THE PLAN SET PI SHEET FOR AS-BUILT RECORD PLAN ARCHIVES.

PROJECT NAME: **RICHFORD-SUTTON**
PROJECT NUMBER: **BHF 0814(1)**

FILE NAME: **s10c222rss** PLOT DATE: 26-SEP-2017
PROJECT MANAGER: **C. CARLSON** DRAWN BY: **G. ROKES**
DESIGNED BY: **C. BURRALL** CHECKED BY: **K. CHEVIOT**
REINFORCING STEEL SCHEDULE SHEET #1 SHEET 70 OF 87

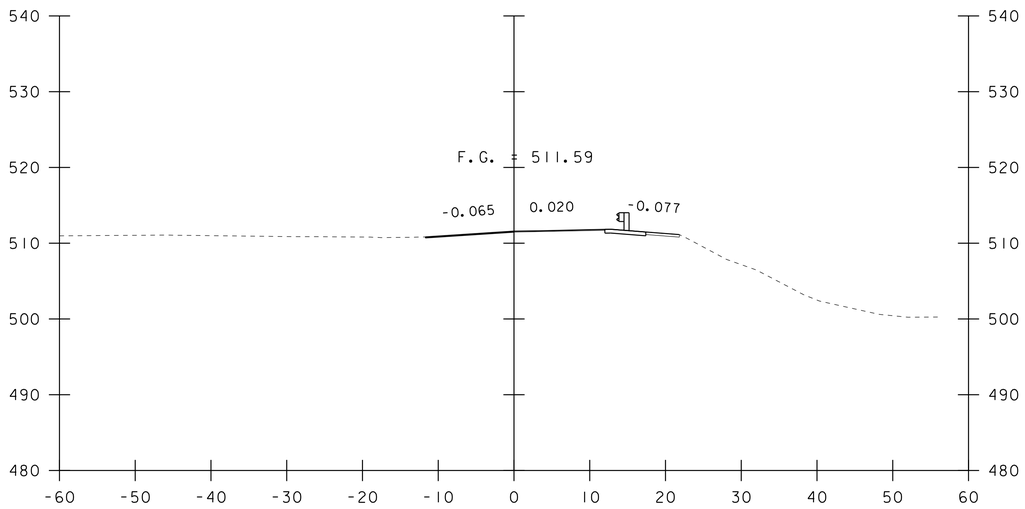

58+75

STA 58+75.00
BEGIN APPROACH
MATCH EXISTING

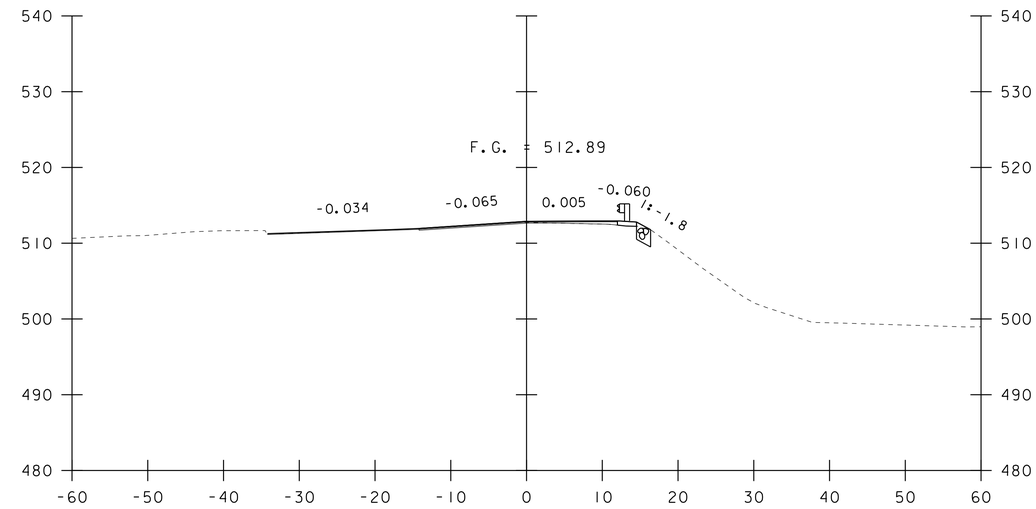

59+17

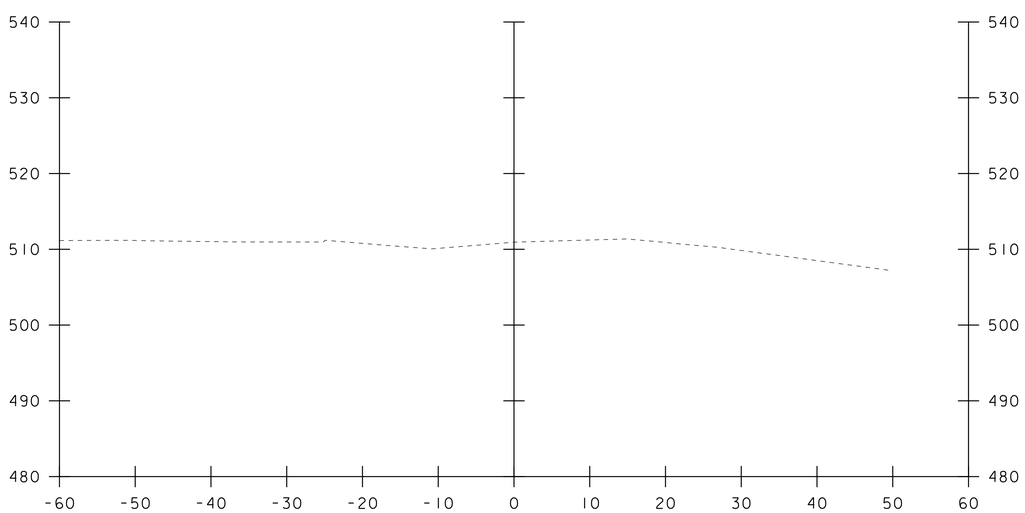

58+50

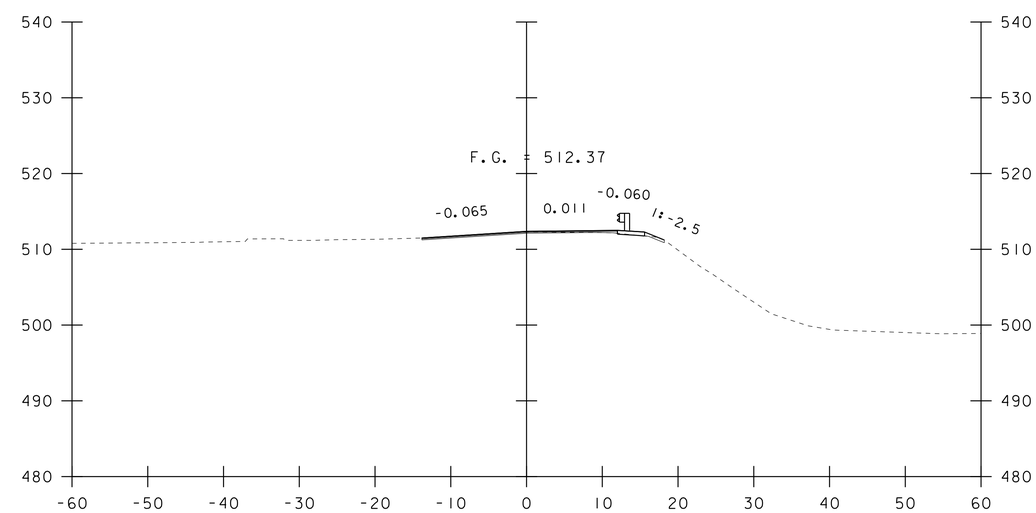

59+00

STA. 58+50 TO STA. 59+17

PROJECT NAME: RICHFORD-SUTTON, PQ	
PROJECT NUMBER: BHF 0814(1)	
FILE NAME: s10c222xs.dgn	PLOT DATE: 26-SEP-2017
PROJECT LEADER: C. CARLSON	DRAWN BY: G. ROKES
DESIGNED BY: C. BURRALL	CHECKED BY: C. BURRALL
VT 105A CROSS SECTION 1	SHEET 71 OF 87

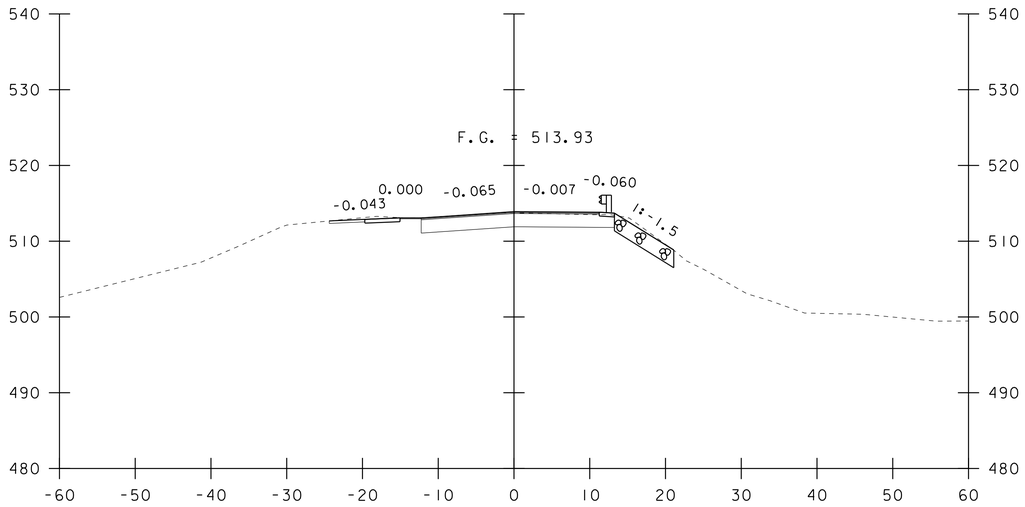

59+50

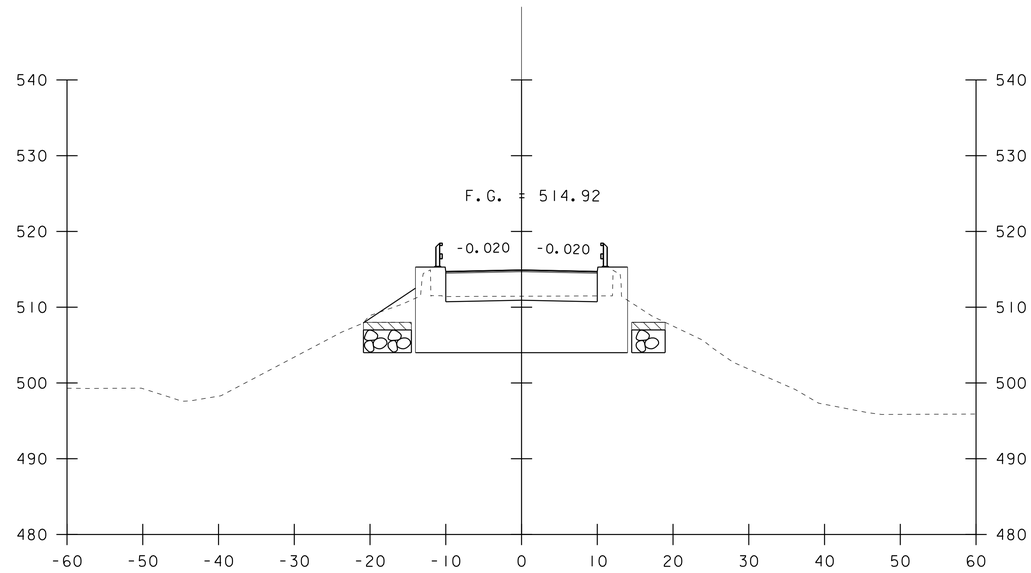

59+87

STA 59+87.00
BEGIN PROJECT/BRIDGE

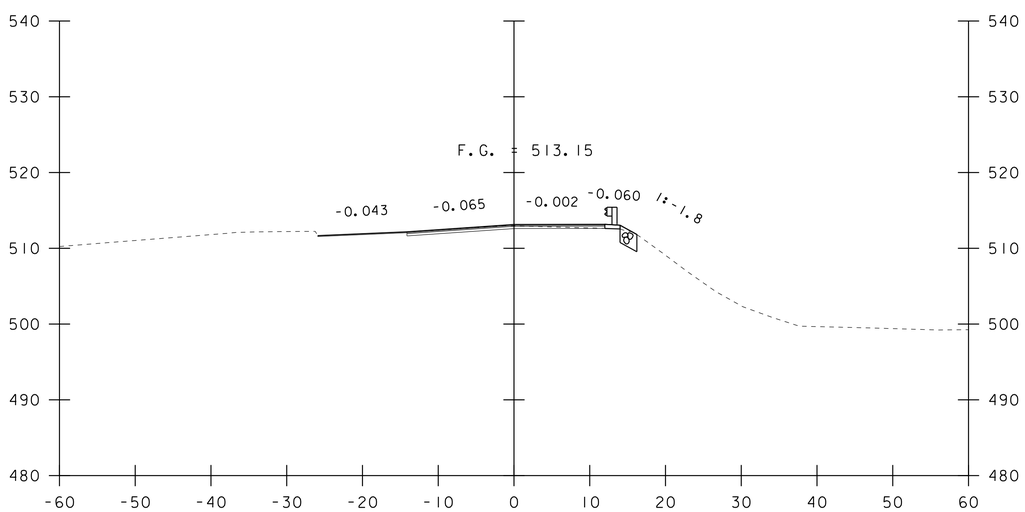

59+25

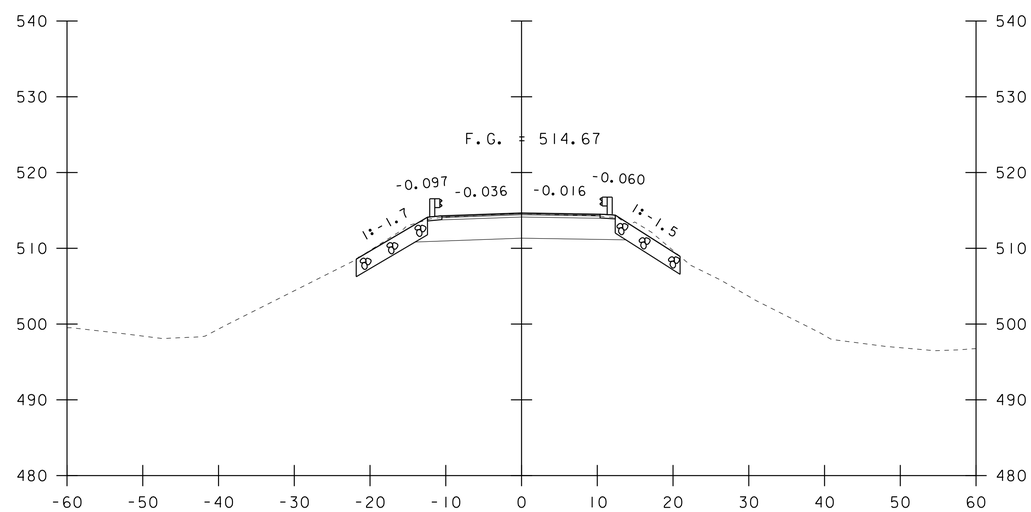

59+75

STA. 59+25 TO STA. 59+87

PROJECT NAME: RICHFORD-SUTTON, PQ	
PROJECT NUMBER: BHF 0814(1)	
FILE NAME: s10c222xs.dgn	PLOT DATE: 26-SEP-2017
PROJECT LEADER: C. CARLSON	DRAWN BY: G. ROKES
DESIGNED BY: C. BURRALL	CHECKED BY: C. BURRALL
VT 105A CROSS SECTION 2	SHEET 72 OF 87

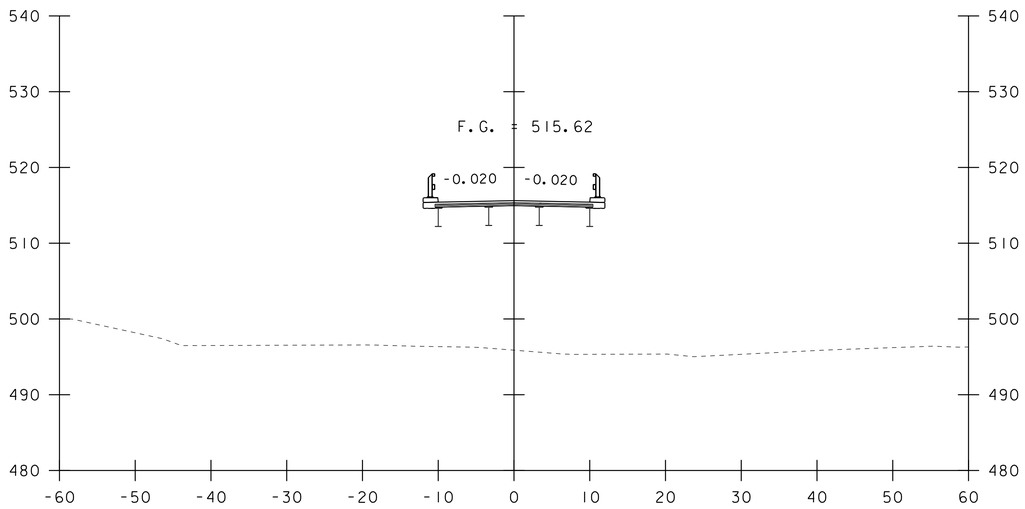

60+25

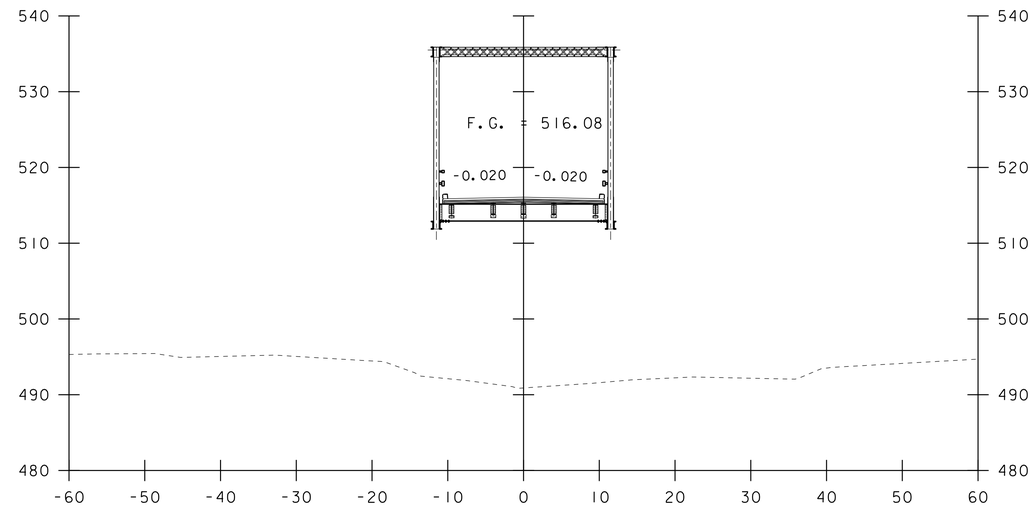

60+50

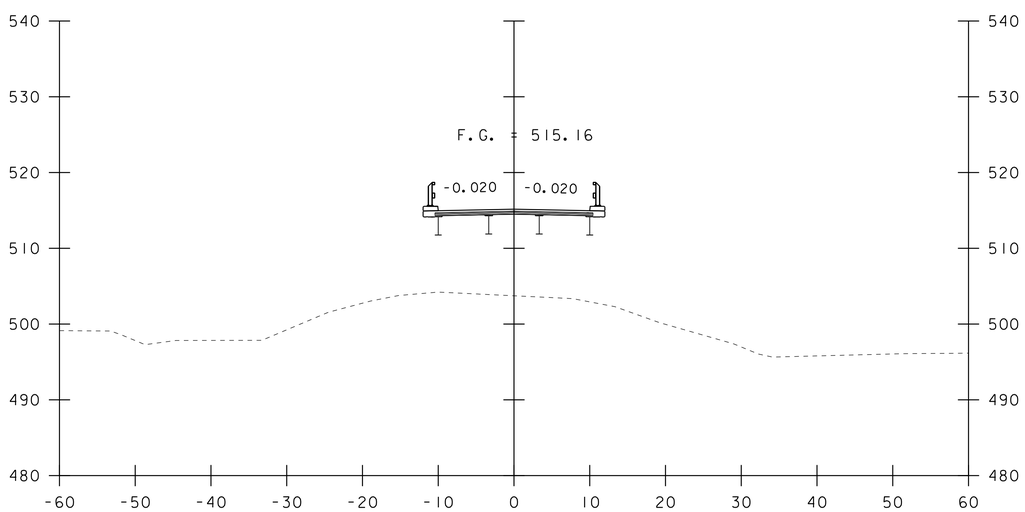

60+00

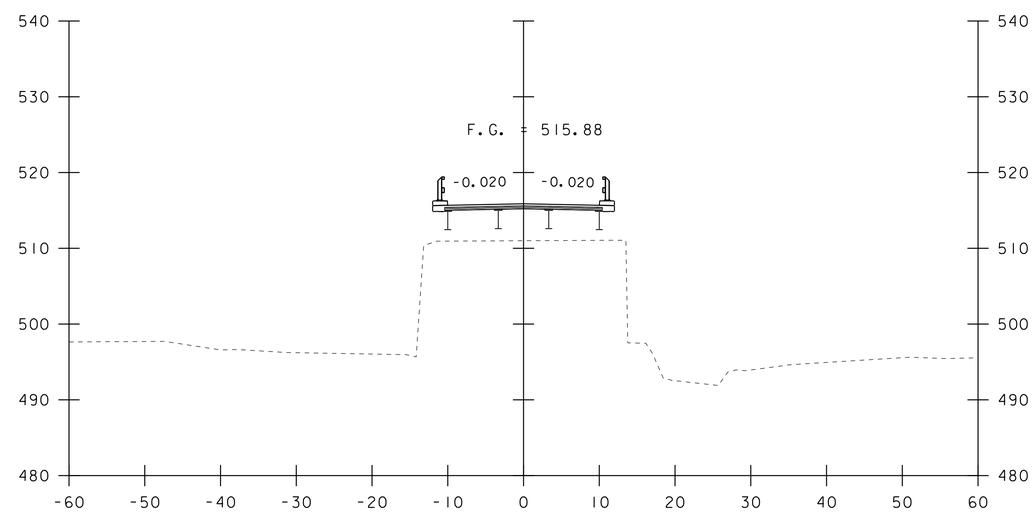

STA 60+39.13
PIER

60+39

STA. 60+00 TO STA. 60+50

PROJECT NAME: RICHFORD-SUTTON, PQ	
PROJECT NUMBER: BHF 0814(1)	
FILE NAME: s10c222xs.dgn	PLOT DATE: 26-SEP-2017
PROJECT LEADER: C. CARLSON	DRAWN BY: G. ROKES
DESIGNED BY: C. BURRALL	CHECKED BY: C. BURRALL
VT 105A CROSS SECTION 3	SHEET 73 OF 87

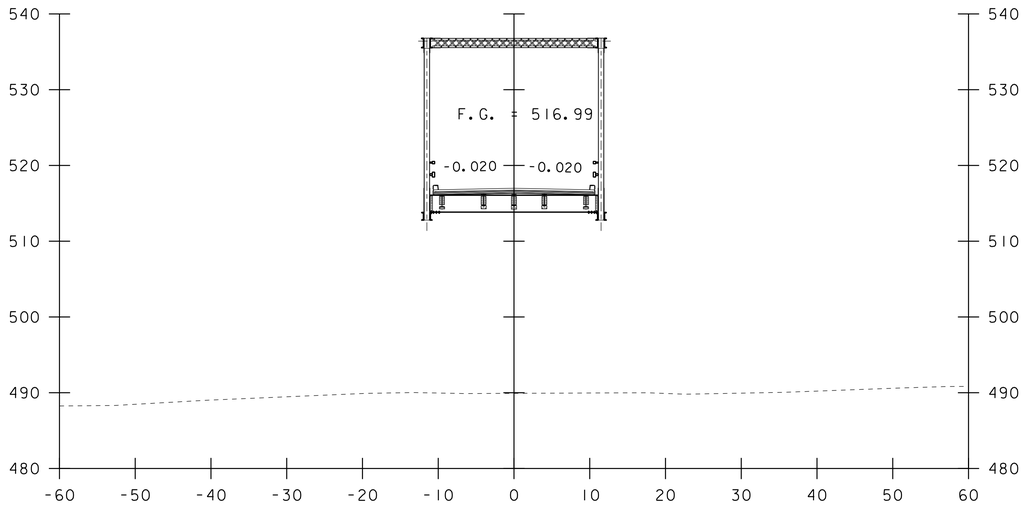

61+00

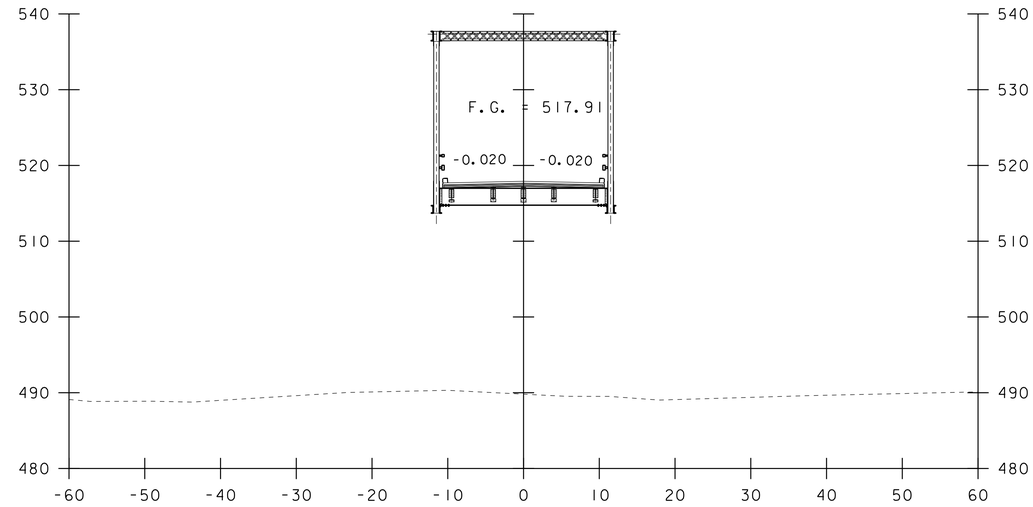

61+50

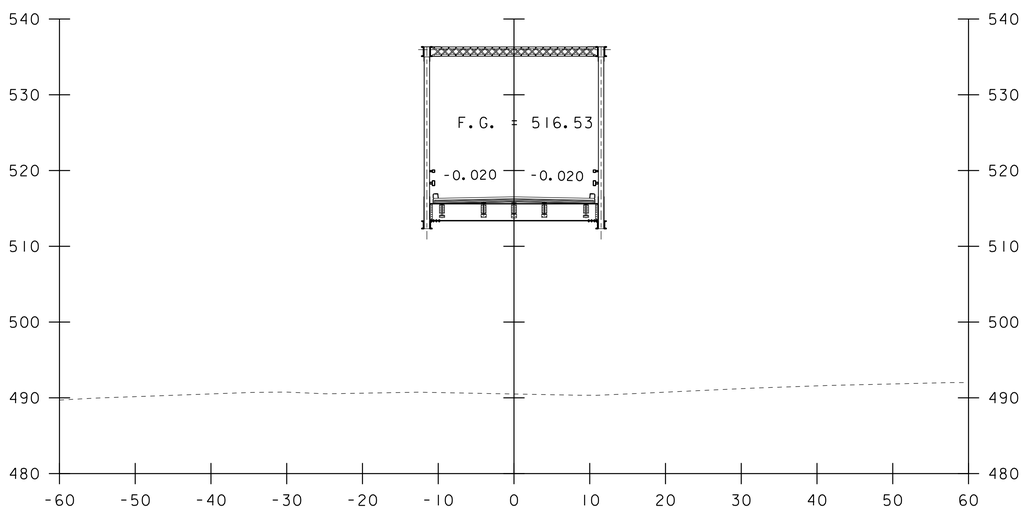

60+75

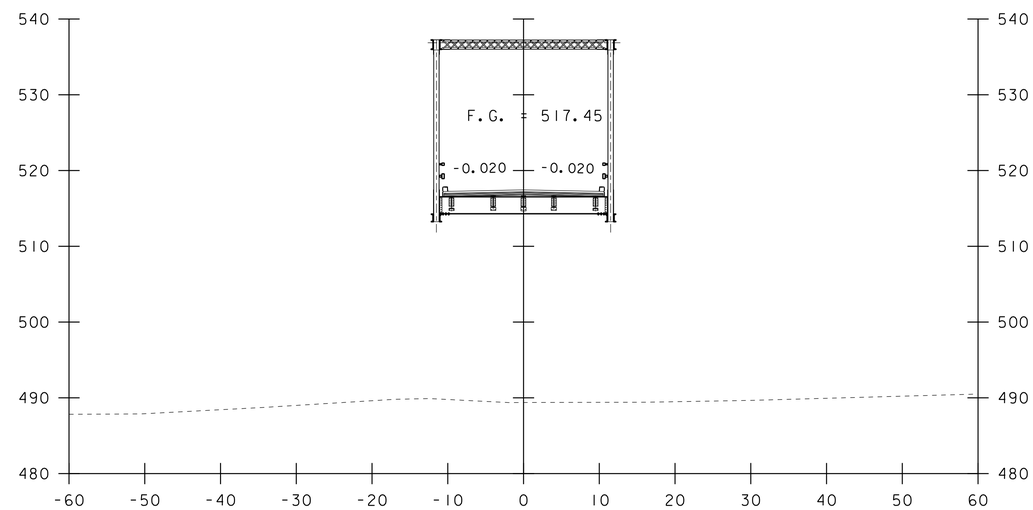

61+25

STA. 60+75 TO STA. 61+50

PROJECT NAME:	RICHFORD-SUTTON, PQ
PROJECT NUMBER:	BHF 0814(1)

FILE NAME: s10c222xs.dgn	PLOT DATE: 26-SEP-2017
PROJECT LEADER: C. CARLSON	DRAWN BY: G. ROKES
DESIGNED BY: C. BURRALL	CHECKED BY: C. BURRALL
VT 105A CROSS SECTION 4	SHEET 74 OF 87

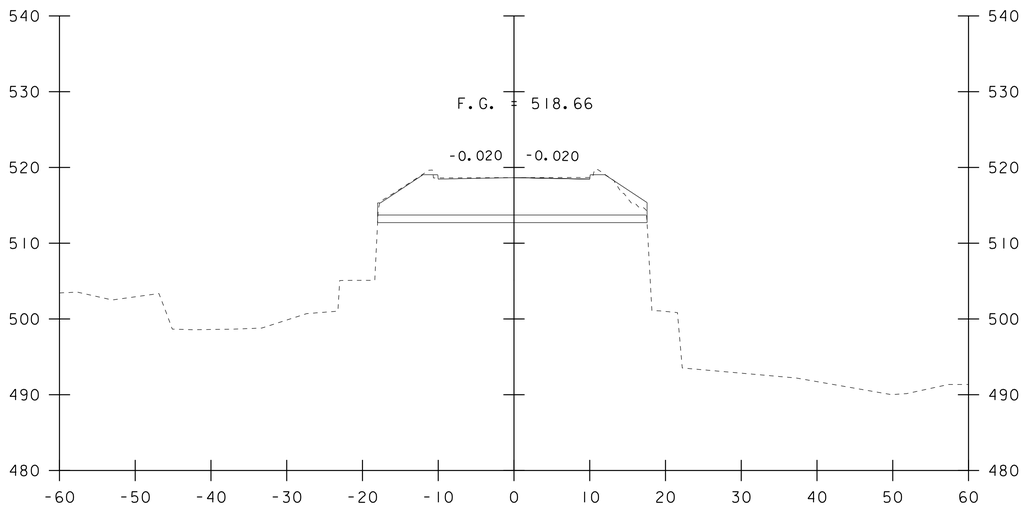

61+91

STA 61+92.18
END PROJECT/BRIDGE

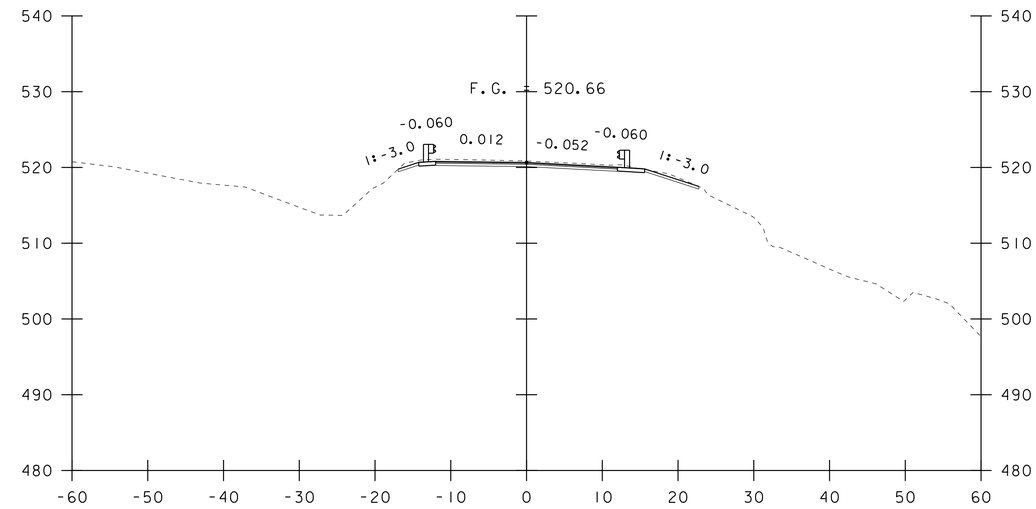

62+25

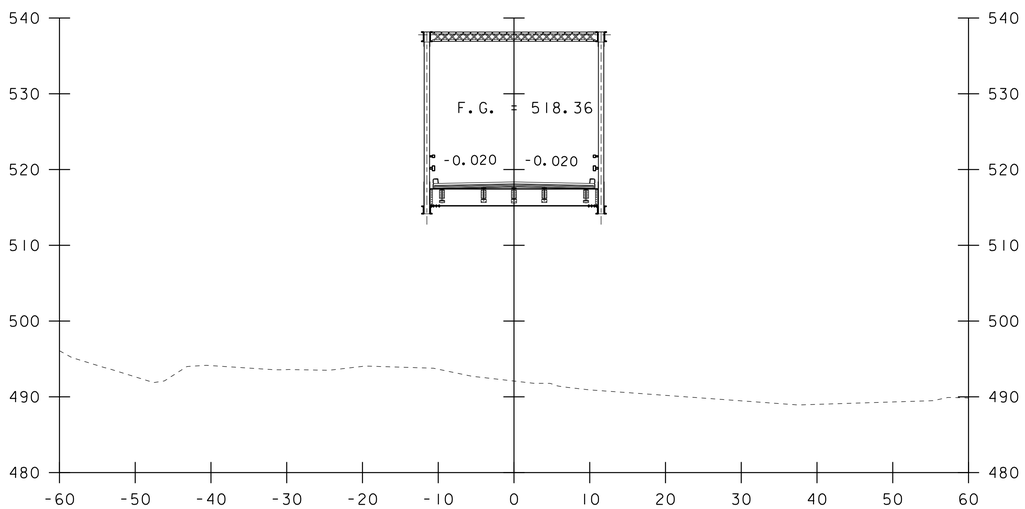

61+75

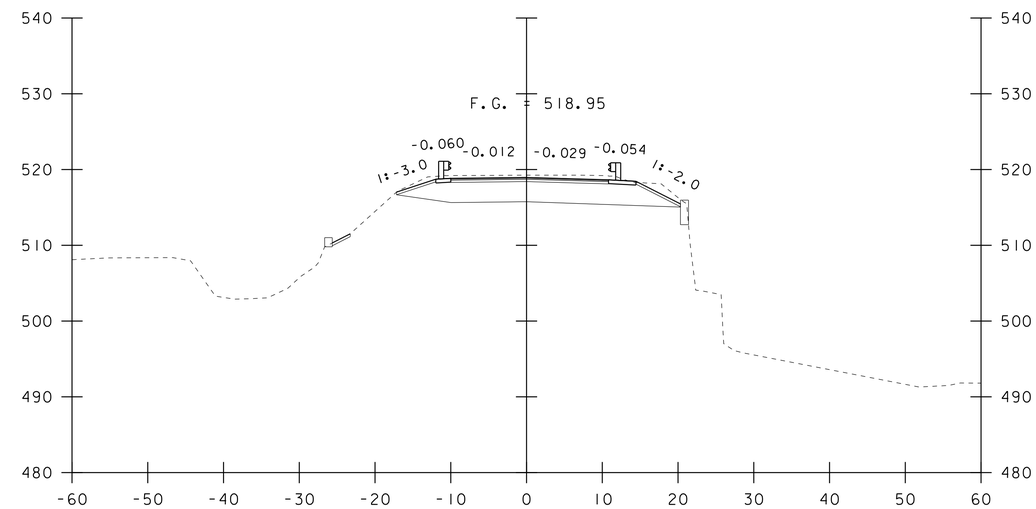

62+00

STA. 61+75 TO STA. 62+25

PROJECT NAME: RICHFORD-SUTTON, PQ	
PROJECT NUMBER: BHF 0814(1)	
FILE NAME: s10c222xs.dgn	PLOT DATE: 26-SEP-2017
PROJECT LEADER: C. CARLSON	DRAWN BY: G. ROKES
DESIGNED BY: C. BURRALL	CHECKED BY: C. BURRALL
VT 105A CROSS SECTION 5	SHEET 75 OF 87

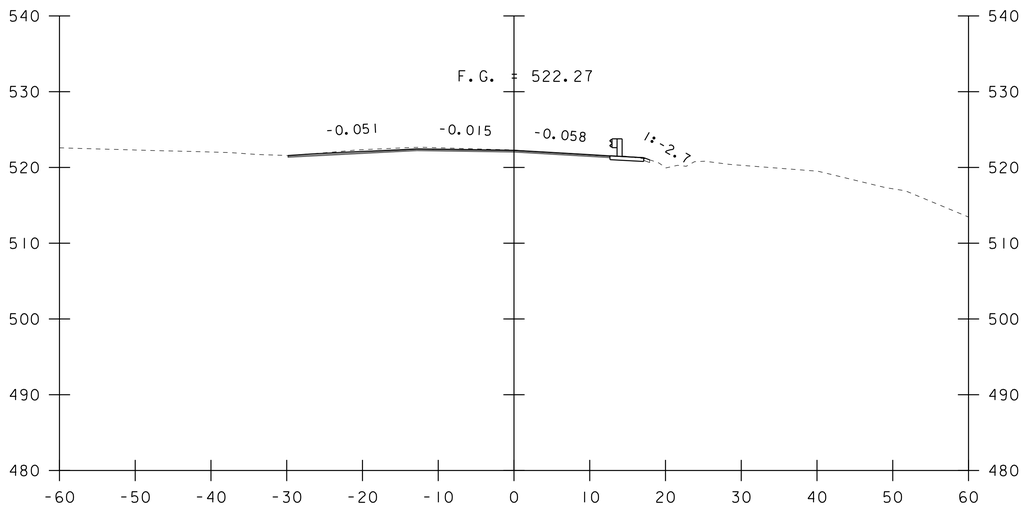

62+53

STA 62+53.00
DRIVE LEFT

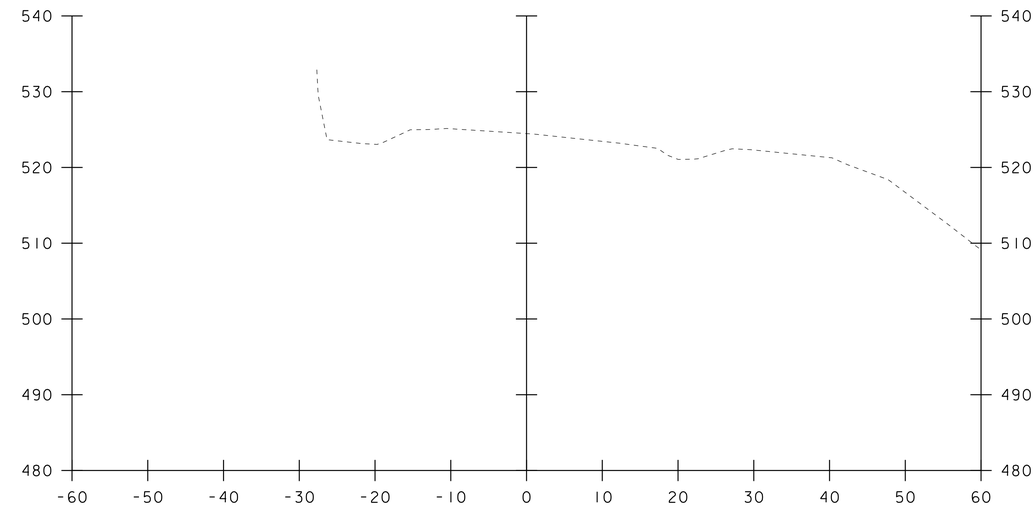

63+00

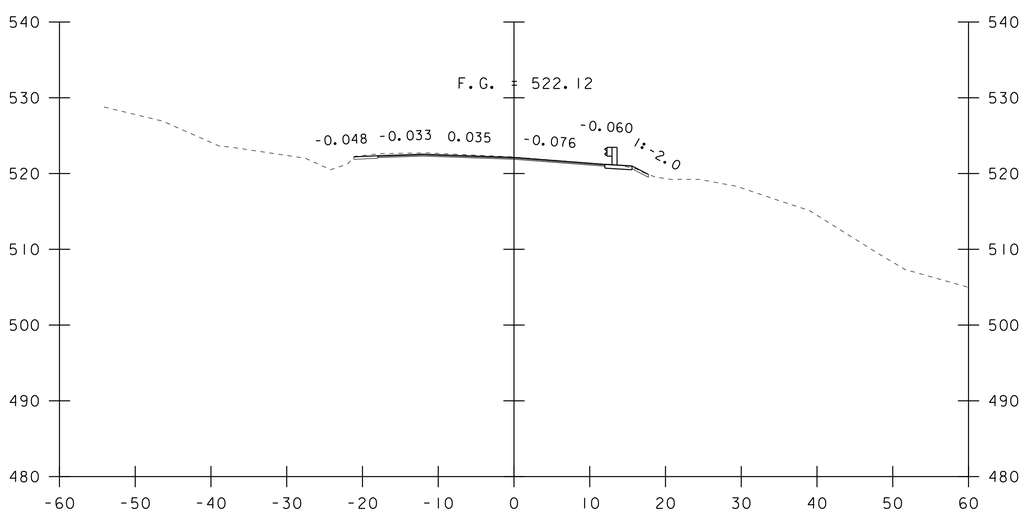

62+50

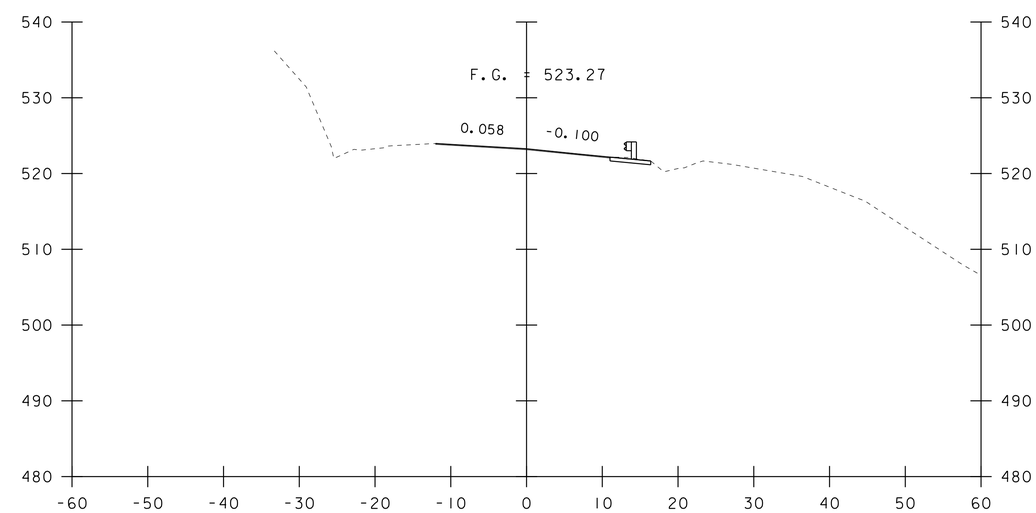

STA 62+75.00
END APPROACH
MATCH EXISTING

62+75

STA. 62+50 TO STA. 63+00

PROJECT NAME: RICHFORD-SUTTON, PQ	
PROJECT NUMBER: BHF 0814(I)	
FILE NAME: s10c222xs.dgn	PLOT DATE: 26-SEP-2017
PROJECT LEADER: C. CARLSON	DRAWN BY: G. ROKES
DESIGNED BY: C. BURRALL	CHECKED BY: C. BURRALL
VT 105A CROSS SECTION 6	SHEET 76 OF 87

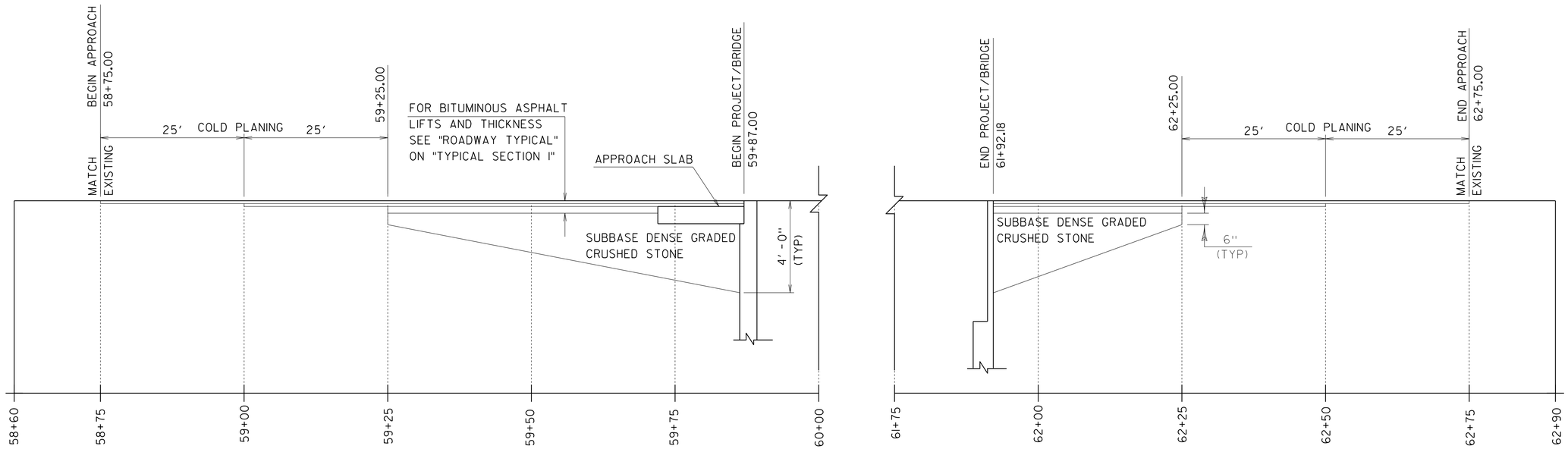

MATERIAL TRANSITION

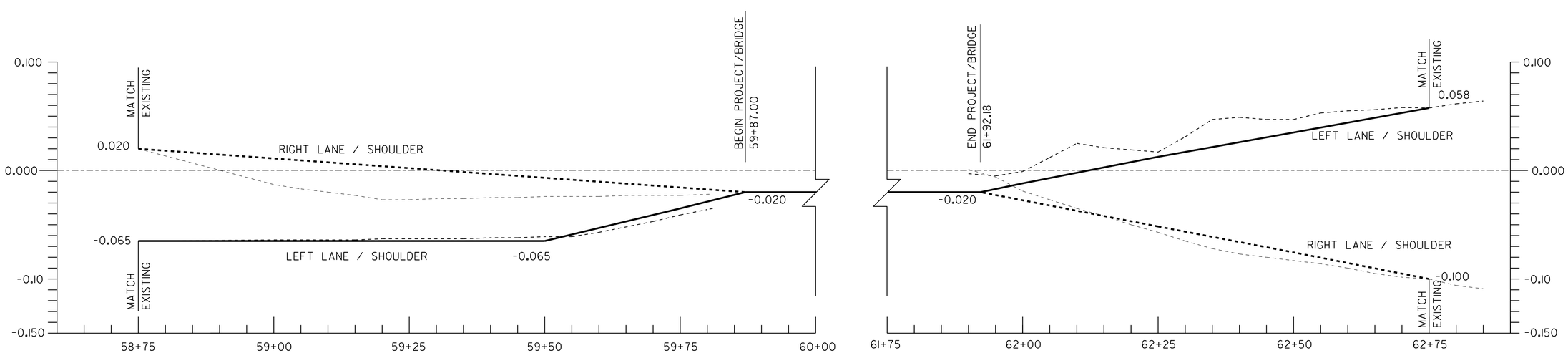

BANKING DIAGRAM

PROJECT NAME: RICHFORD-SUTTON, PQ	
PROJECT NUMBER: BHF 0814(1)	
FILE NAME: s10c222pro.dgn	PLOT DATE: 26-SEP-2017
PROJECT LEADER: C. CARLSON	DRAWN BY: G. ROKES
DESIGNED BY: C. BURRALL	CHECKED BY: C. BURRALL
MATERIAL TRANSITION & BANKING DIAGRAM	SHEET 77 OF 87

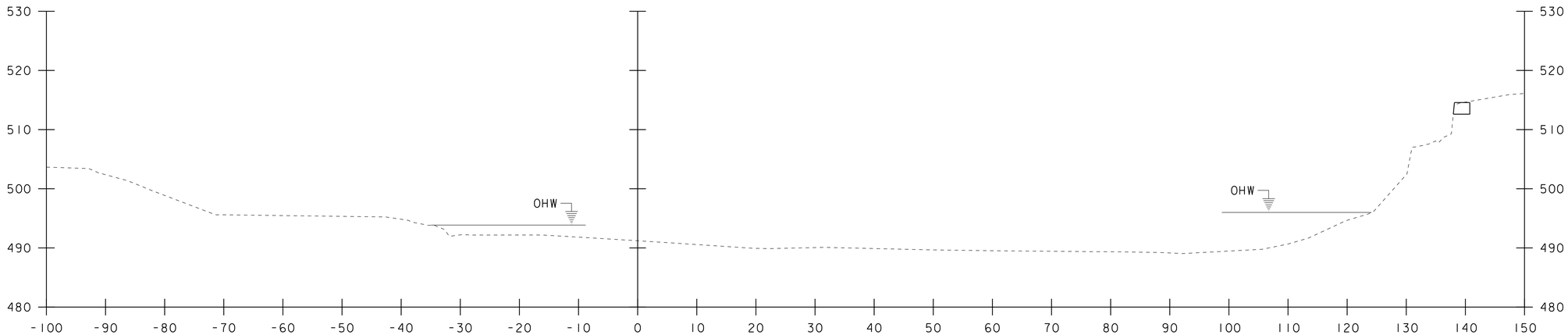

10+70

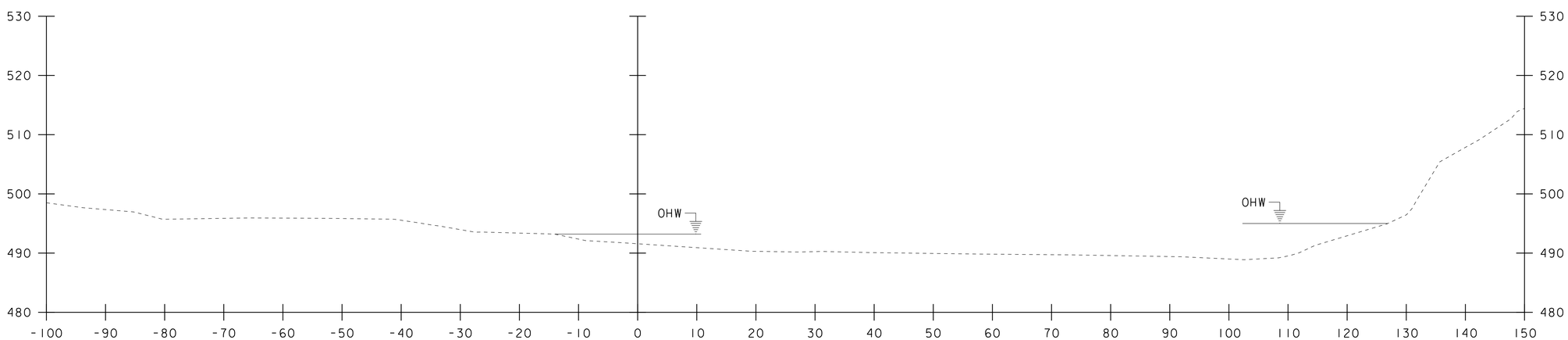

10+60

STA. 10+60 TO STA. 10+70

PROJECT NAME: RICHFORD-SUTTON, PQ	
PROJECT NUMBER: BHF 0814(1)	
FILE NAME: s10c222xs.dgn	PLOT DATE: 26-SEP-2017
PROJECT LEADER: C. CARLSON	DRAWN BY: G. ROKES
DESIGNED BY: C. BURRALL	CHECKED BY: C. BURRALL
CHANNEL CROSS SECTION 1	SHEET 78 OF 87

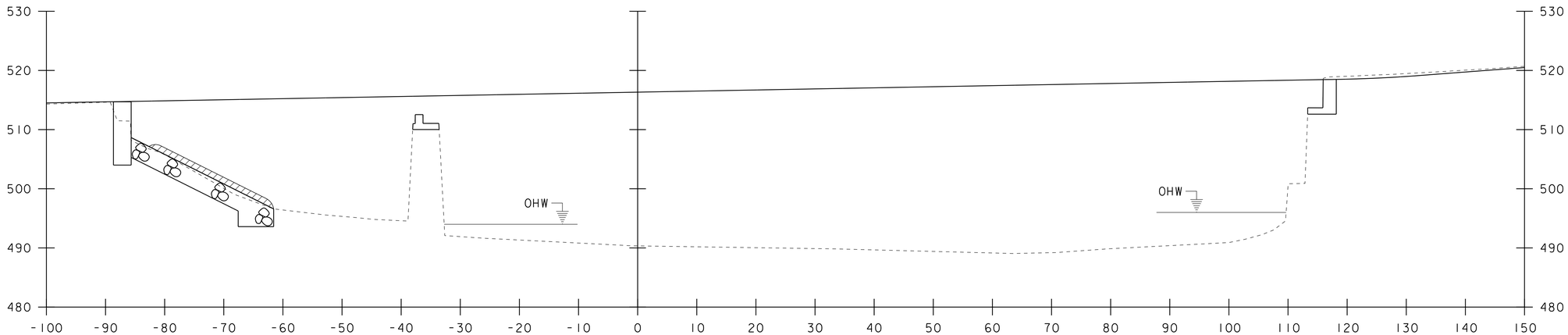

10+90

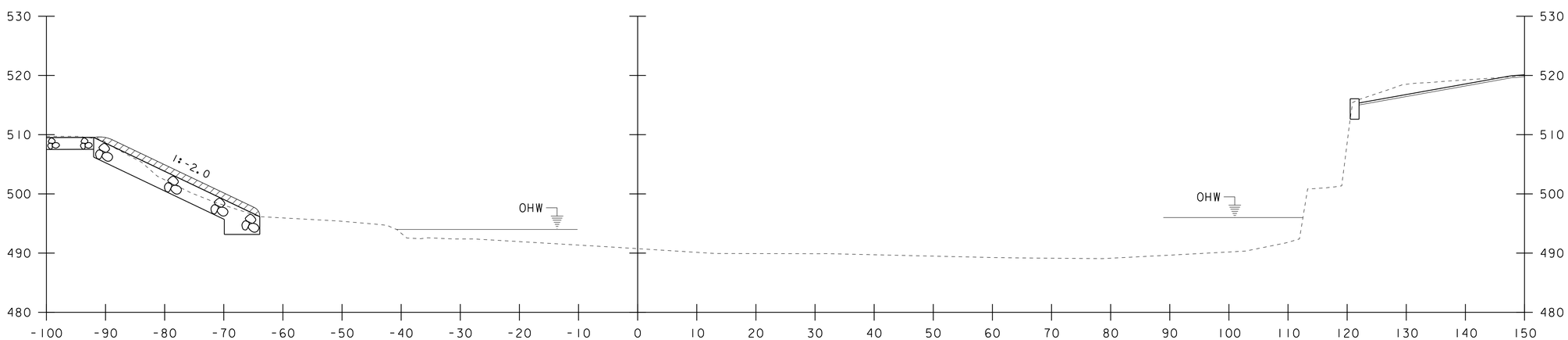

BEGIN
STA. 10+71.75 LEFT
UNCLASSIFIED CHANNEL EXCAVATION
GRUBBING MATERIAL
STONE FILL, TYPE III
GEOTEXTILE UNDER STONE FILL

10+80

STA. 10+80 TO STA. 10+90

PROJECT NAME: RICHFORD-SUTTON, PQ	
PROJECT NUMBER: BHF 0814(1)	
FILE NAME: s10c222xs.dgn	PLOT DATE: 26-SEP-2017
PROJECT LEADER: C. CARLSON	DRAWN BY: G. ROKES
DESIGNED BY: C. BURRALL	CHECKED BY: C. BURRALL
CHANNEL CROSS SECTION 2	SHEET 79 OF 87

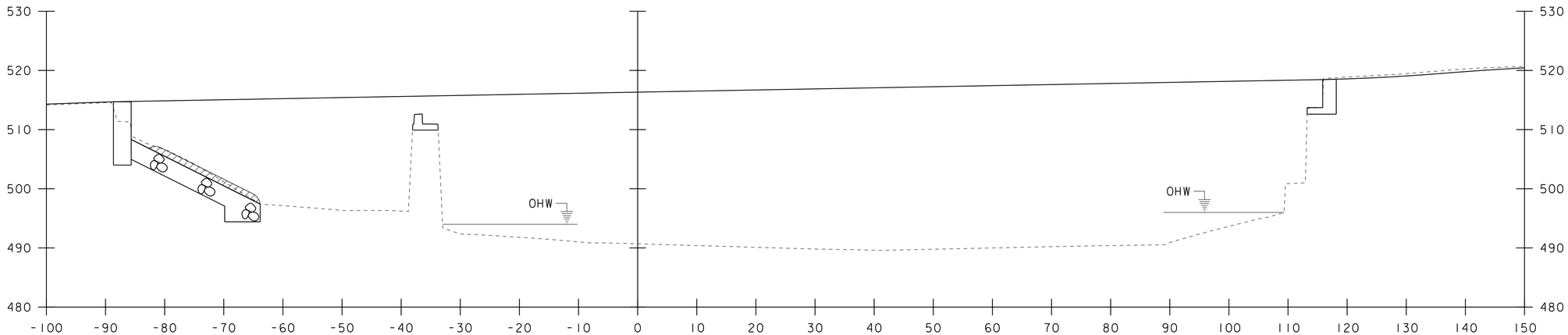

11+10

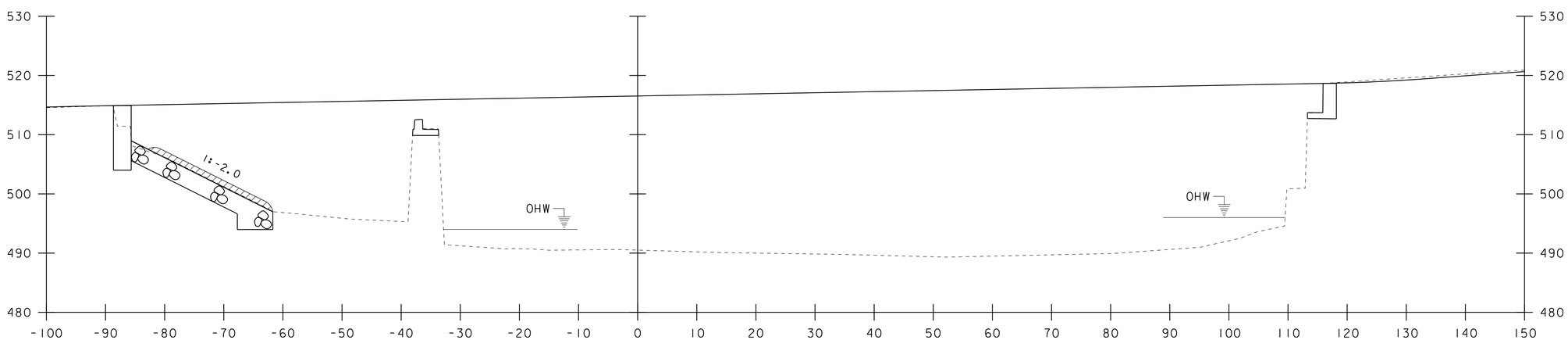

11+00

STA. 11+00 TO STA. 11+10

PROJECT NAME: RICHFORD-SUTTON, PQ	
PROJECT NUMBER: BHF 0814(1)	
FILE NAME: s10c222xs.dgn	PLOT DATE: 26-SEP-2017
PROJECT LEADER: C. CARLSON	DRAWN BY: G. ROKES
DESIGNED BY: C. BURRALL	CHECKED BY: C. BURRALL
CHANNEL CROSS SECTION 3	SHEET 80 OF 87

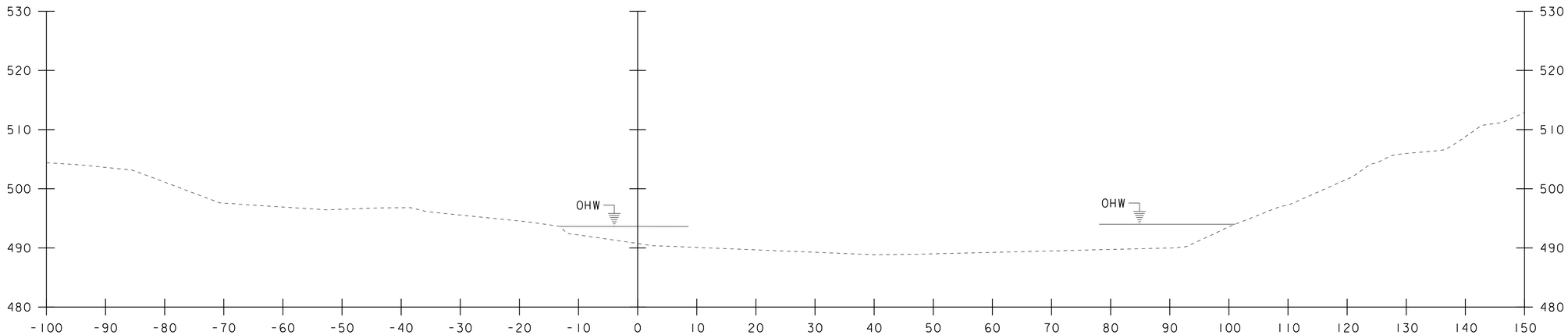

11+30

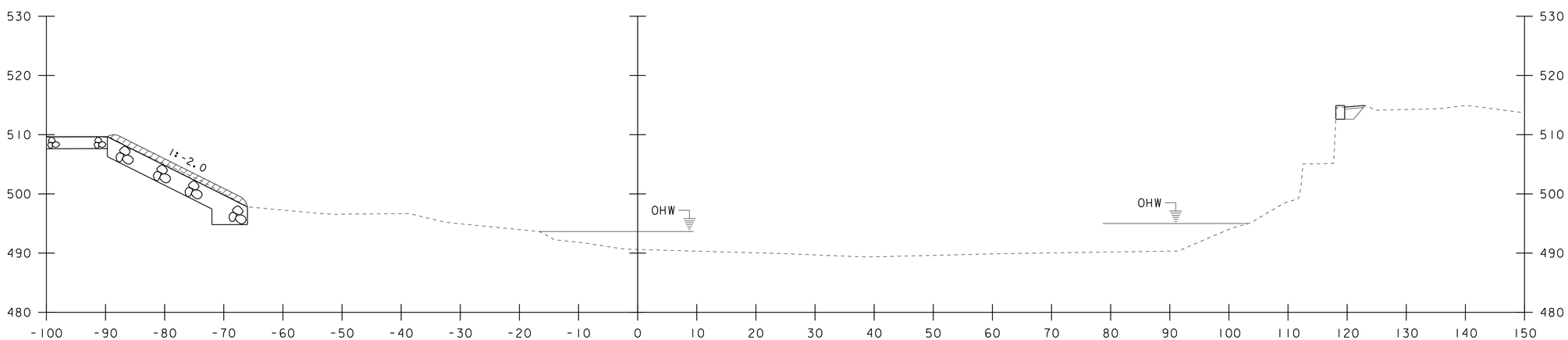

END
STA. 11+22.00 LEFT
UNCLASSIFIED CHANNEL EXCAVATION
GRUBBING MATERIAL
STONE FILL, TYPE III
GEOTEXTILE UNDER STONE FILL

11+20

STA. 11+20 TO STA. 11+30

PROJECT NAME: RICHFORD-SUTTON, PQ	
PROJECT NUMBER: BHF 0814(1)	
FILE NAME: s10c222xs.dgn	PLOT DATE: 26-SEP-2017
PROJECT LEADER: C. CARLSON	DRAWN BY: G. ROKES
DESIGNED BY: C. BURRALL	CHECKED BY: C. BURRALL
CHANNEL CROSS SECTION 4	SHEET 81 OF 87

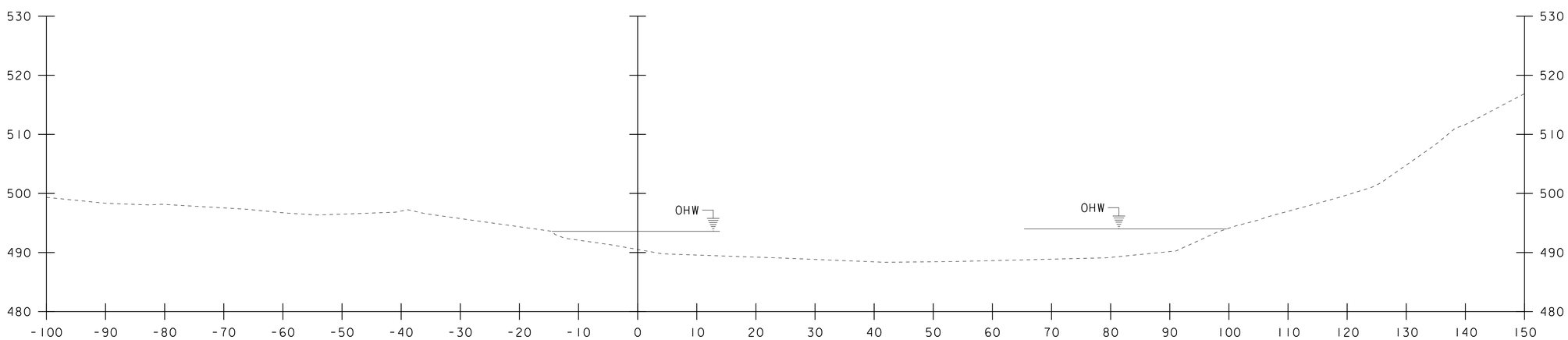

11+40

STA. 11+40 TO STA. 11+40

PROJECT NAME: RICHFORD-SUTTON, PQ	
PROJECT NUMBER: BHF 0814(1)	
FILE NAME: s10c222xs.dgn	PLOT DATE: 26-SEP-2017
PROJECT LEADER: C. CARLSON	DRAWN BY: G. ROKES
DESIGNED BY: C. BURRALL	CHECKED BY: C. BURRALL
CHANNEL CROSS SECTION 5	SHEET 82 OF 87

EPSC PLAN NARRATIVE

1.1 PROJECT DESCRIPTION

THIS PROJECT INVOLVES THE RESTORATION OF THE EXISTING STEEL TRUSS, REPLACEMENT OF THE APPROACH SPAN, REPLACEMENT OF ABUTMENT #1, REPAIR WORK OF THE EXISTING PIER AND EXISTING ABUTMENT #2, AS WELL AS ALL NECESSARY APPROACH WORK.

NOTE: AREA OF DISTURBANCE INCLUDES LIMITS OF EARTH DISTURBANCE WITHIN THE PROJECT AREA, AS WELL AS WASTE, BORROW AND STAGING AREAS, AND OTHER EARTH DISTURBING ACTIVITIES WITHIN OR DIRECTLY ADJACENT TO THE PROJECT LIMITS AS SHOWN ON THE ATTACHED EPSC PLAN.

TOTAL AREA OF DISTURBANCE AS SHOWN ON THE ATTACHED EPSC PLAN IS APPROXIMATELY 0.21 ACRES IN THE UNITED STATES OF AMERICA AND APPROXIMATELY .08 ACRES IN CANADA.

IT IS ANTICIPATED THAT THIS PROJECT WILL LAST ONE CONSTRUCTION SEASON.

1.2 SITE INVENTORY

1.2.1 TOPOGRAPHY

THE TOPOGRAPHY OF THE AREA IS RELATIVELY FLAT FROM THE INTERNATIONAL BORDER TO THE SOUTH. AS YOU CROSS THE BORDER THE TOPOGRAPHY CHANGES TO HILLY TERRAIN WITH MOSTLY WELL ESTABLISHED FOREST WITH OCCASIONAL OPEN AREAS. VT ROUTE 105A, TH 39, AND A PAVED DRIVEWAY FOR THE US BORDER STATION, ARE WITHIN THE PROJECT SITE. THERE IS A US BORDER CROSSING STATION ON THE SOUTH SIDE OF THE PROJECT AND A CANADIAN BORDER CROSSING TO THE NORTH OF THE PROJECT SITE.

1.2.2 DRAINAGE, WATERWAYS, BODIES OF WATER, AND PROXIMITY TO NATURAL OR MAN-MADE WATER FEATURES

THE MISSISQUOI RIVER IS THE ONLY WATER SOURCE ON THE PROJECT SITE. THE RIVER IS CLASSIFIED AS LOW SLOPE, SINUOUS, WIDE, WITH A NONCONFINED AND UNARMORED CHANNEL AT THE SITE. THE STREAM BED CONSISTS OF SILT, GRAVEL AND COBBLES. THE TRIBUTARY AREA AT THE STRUCTURE CROSSING IS 4.6 MILES^2. DUE TO THE NATURE OF THE SURROUNDING TERRAIN THE PROJECT SITE COULD RECEIVE RUNOFF WATER FROM A FEW NEARBY SLOPES.

1.2.3 VEGETATION

THE VEGETATION IN THE PROJECT AREA CONSISTS OF HARDWOOD TREES AND UNDERGROWTH. THE IMPACT TO VEGETATION WILL BE LIMITED TO THAT WHICH IS DIRECTLY AFFECTED BY REPLACEMENT AND REHABILITATION OF THE EXISTING BRIDGE. UPON PROJECT COMPLETION, THE CHANNEL WILL BE ARMORED WITH STONE FILL TYPE III AS SPECIFIED ON THE PLANS. DISTURBED VEGETATION WILL BE REESTABLISHED WITH NATIVE SEED AND STRAW MULCH PRACTICES.

1.2.4 SOILS

ALL SOIL DATA CAME FROM THE U.S. DEPARTMENT OF AGRICULTURE SOIL CONSERVATION SERVICE FOR THE COUNTY OF FRANKLIN, VERMONT. SOILS ON THE PROJECT SITE ARE PODUNK VARIANT SILT LOAM, 0%-2% SLOPES, “K FACTOR” = 0.32; COLTON GRAVELLY LOAMY SAND, 2%-8% SLOPES, “K FACTOR” = 0.17; AND WOODSTOCK-ROCK OUTCROP COMPLEX, 15%-25% SLOPES, “K FACTOR” = 0.24.

1.2.5 SENSITIVE RESOURCE AREAS

CRITICAL HABITATS: NO
HISTORICAL OR ARCHEOLOGICAL AREAS: YES
PRIME AGRICULTURAL LAND: NO
THREATENED AND ENDANGERED SPECIES: THIS AREA HAS BEEN IDENTIFIED AS A POTENTIAL HABITAT FOR THE NORTHERN LONG-EARED BAT. THIS PROJECT WILL FALL UNDER **MAY AFFECT, NOT LIKELY TO ADVERSELY AFFECT WITH AVOIDANCE MINIMIZATION MEASURES**. TIME OF YEAR CUTTING RESTRICTIONS WILL BE IMPLEMENTED AS AN AVOIDANCE MINIMIZATION MEASURE. SUITABLE HABITAT TREES CAN ONLY BE CUT BETWEEN SEPTEMBER 1ST AND APRIL 14TH. THE BRIDGE PORTION OF THE PROJECT HAS NO TIME OF YEAR RESTRICTIONS AS IT WAS DETERMINIED TO HAVE NO HABITAT FOR BATS.
ADDITIONAL SPECIES (ONLY IDENTIFIED IN QUEBEC):
- WOOD TURTLE (GLYPTEMYS INSCULPTA): FOR WORK OCCURING JUNE THROUGH AUGUST, CARE SHALL BE TAKEN TO NOT AFFECT ANY IDENTIFIED TURTLES IN THE PROCESS OF LAYING EGGS IN THE AREA. IDENTIFIED TURTLES SHALL BE RELOCATED AWAY FROM THE RIVER BANKS AND THE PROJECT AREA.
- FISH HABITAT: WORK CONDUCTED IN OR NEAR THE WATER SHALL BE LIMITED TO MINIMAL DURATIONS. IT IS RECOMMENDED THAT CONSTRUCTION OPERATIONS AT OR NEAR THE WATER BE CONDUCTED DURING LOW WATER LEVELS.

WATER RESOURCE: MISSISQUOI *NATIONAL AND WILD SCENIC* RIVER
WETLANDS: NO

1.3 RISK EVALUATION

THIS PROJECT DOES NOT FALL UNDER THE JURISDICTION OF GENERAL PERMIT 3-9020 FOR STORMWATER RUNOFF FROM CONSTRUCTION SITES. SHOULD CHANGES PRIOR TO OR DURING CONSTRUCTION RESULT IN ONE OR MORE ACRES OF EARTH DISTURBANCE OR SHOULD THE PROJECT BECOME PART OF A LARGER PLAN OF DEVELOPMENT, THE CONTRACTOR WILL BE RESPONSIBLE FOR ANY ADDITIONAL PERMITTING.

1.4 EROSION PREVENTION AND SEDIMENT CONTROL

THE EROSION CONTROL PLANS ARE MEANT AS A GUIDELINE FOR PREVENTING EROSION AND CONTROLLING SEDIMENT TRANSPORT. THE PRINCIPLES OUTLINED IN THIS NARRATIVE CONSIST OF APPLYING MEASURES THROUGHOUT CONSTRUCTION OF THE PROJECT IN ORDER TO MINIMIZE SEDIMENT TRANSPORT TO THE RECEIVING WATERS. THE MEASURES INCLUDE STABILIZATION AND STRUCTURAL PRACTICES, STORM WATER CONTROLS AND OTHER POLLUTION PREVENTION PRACTICES. THEY HAVE BEEN PROPOSED BY THE DESIGNER AS A BASIS FOR PROTECTING RESOURCES AND WILL NEED TO BE BUILT UPON BASED ON THE SPECIFIC MEANS AND METHODS OF THE CONTRACTOR. REFER TO THE LOW RISK SITE HANDBOOK AND APPROPRIATE DETAIL SHEETS FOR SPECIFIC GUIDANCE AND CONSTRUCTION DETAILING.

ALL MEASURES SHALL BE REGULARLY MAINTAINED AND SHALL BE CHECKED FOR SEDIMENT BUILD-UP. SEDIMENT SHALL BE DISPOSED OF AT AN APPROVED SITE WHERE IT WILL NOT BE SUBJECT TO EROSION.

1.4. MARK SITE BOUNDARIES

SITE BOUNDARIES AND AREAS CONSTRUCTION EQUIPMENT CAN ACCESS SHALL BE DELINEATED. PROJECT DEMARCATION FENCING (PDF) SHALL BE USED TO PHYSICALLY MARK SITE BOUNDARIES, ETC).

1.4.2 LIMIT DISTURBANCE AREA

PREVENTING INITIAL SOIL EROSION BY MINIMIZING THE EXPOSED AREA IS MUCH MORE EFFECTIVE THAN TREATING ERODED SEDIMENT. EARTH DISTURBANCE CAN BE MINIMIZED THROUGH CONSTRUCTION PHASING BY ONLY OPENING UP EARTH AS NECESSARY. THIS CAN LIMIT THE AREA THAT WILL BE DISTURBED AND EXPOSED TO EROSION. EMPLOY TEMPORARY CONSTRUCTION STABILIZATION PRACTICES IN INCREMENTAL STAGES AS PHASES CHANGE. FOR PROJECTS WHICH FALL UNDER THE CONSTRUCTION GENERAL PERMIT, ONLY THE ACREAGE LISTED ON THE PERMIT AUTHORIZATION MAY BE EXPOSED AT ANY GIVEN TIME.

MAINTAINING VEGETATED BUFFERS ALONG STREAM BANKS, WETLANDS OR OTHER SENSITIVE AREAS IS A CRUCIAL EROSION AND SEDIMENT CONTROL MEASURE THAT SHOULD BE ESTABLISHED WHEREVER POSSIBLE.

1.4.3 SITE ENTRANCE/EXIT STABILIZATION

TRACKING OF SEDIMENT ONTO PUBLIC HIGHWAYS SHALL BE MINIMIZED TO REDUCE THE POTENTIAL FOR RUNOFF ENTERING RECEIVING WATERS. INSTALLATION SHALL COINCIDE WITH THE CONTRACTORS PROGRESS SCHEDULE.

STABILIZED CONSTRUCTION ENTRANCES SHALL BE INSTALLED AS PROPOSED ON THE EPSC PLAN AND ANYWHERE EQUIPMENT WILL BE GOING FROM AREAS OF EXPOSED SOILS TO PAVED SURFACES.

1.4.4 INSTALL SEDIMENT BARRIERS

SEDIMENT BARRIERS SHALL BE UTILIZED TO INTERCEPT RUNOFF AND ALLOW SUSPENDED SEDIMENT TO SETTLE OUT. THEY SHALL BE INSTALLED PRIOR TO ANY UP SLOPE WORK.

GEOTEXTILE FOR SILT FENCE, WOVEN WIRE REINFORCED AND GEOTEXTILE FOR FILTER CURTAIN SHALL BE INSTALLED AS PROPOSED ON THE EPSC PLAN.

1.4.5 DIVERT UPLAND RUNOFF

DIVERSIONARY MEASURES SHALL BE USED TO INTERCEPT RUNOFF FROM ABOVE THE CONSTRUCTION AND DIRECT IT AROUND THE DISTURBED AREA SO THAT CLEAN WATER DOES NOT BECOME MUDDIED WHILE TRAVELING OVER EXPOSED SOILS ON THE CONSTRUCTION SITE.

THE PROJECT AREA IS RELATIVELY FLAT. THEREFORE, IT IS NOT ANTICIPATED THAT DIVERSION MEASURES WILL BE NECESSARY.

1.4.6 SLOW DOWN CHANNELIZED RUNOFF

CHECK STRUCTURES SHALL BE UTILIZED TO REDUCE THE VELOCITY, AND THUS THE EROSIVE POTENTIAL, OF CONCENTRATED FLOW IN CHANNELS.

NONE ANTICIPATED HERE.

1.4.7 CONSTRUCT PERMANENT CONTROLS

PERMANENT STORMWATER TREATMENT DEVICES SHALL BE INSTALLED AS SHOWN ON THE PLANS AND IN ACCORDANCE WITH PERMIT CONDITIONS.

NONE ANTICIPATED HERE.

1.4.8 STABILIZE EXPOSED SOILS DURING CONSTRUCTION

ALL AREAS OF DISTURBANCE MUST HAVE TEMPORARY STABILIZATION IN PLACE WITHIN 48 HOURS OF DISTURBANCE OR IN ACCORDANCE WITH THE CONSTRUCTION GENERAL PERMIT 3-9020 AUTHORIZATION.

SURFACE ROUGHENING OF ALL EXPOSED SLOPES, COMBINED WITH TEMPORARY MULCHING, SHALL BE UTILIZED ON A REGULAR BASIS. BIODEGRADABLE EROSION CONTROL MATTING OR AN EQUIVALENT SHALL BE USED TO STABILIZE ALL SLOPES STEEPER THAN 1:3.

THE FORECAST OF RAINFALL EVENTS SHALL TRIGGER IMMEDIATE PROTECTION OF EXPOSED SOILS.

1.4.9 WINTER STABILIZATION

VARIOUS MEASURES SPECIFIC TO WINTER MAY BE NECESSARY SHOULD THE PROJECT EXTEND INTO WINTER (OCTOBER 15 THROUGH APRIL 15). REFER TO THE LOW RISK SITE HANDBOOK FOR GUIDANCE.

NONE ANTICIPATED HERE.

1.4.10 STABILIZE SOIL AT FINAL GRADE

EXPOSED SOIL MUST BE STABILIZED WITHIN 48 HOURS OF REACHING FINAL GRADE.

SEED, MULCH, FERTILIZER AND LIME SHALL BE USED TO ESTABLISH PERMANENT VEGETATION. FOR SLOPES STEEPER THAN 1:3, BIODEGRADABLE EROSION CONTROL MATTING OR AN EQUIVALENT SHALL BE USED INSTEAD OF MULCH.

1.4.11 DE-WATERING ACTIVITIES

DISCHARGE FROM DEWATERING ACTIVITIES THAT FLOWS OFF OF THE CONSTRUCTION SITE MUST NOT CAUSE OR CONTRIBUTE TO A VIOLATION OF THE VERMONT WATER QUALITY STANDARDS.

NONE ANTICIPATED HERE.

1.4.12 INSPECT YOUR SITE

INSPECT THE PROJECT SITE BASED ON SPECIAL PROVISION REQUIREMENTS OR CONSTRUCTION GENERAL PERMIT AUTHORIZATION STIPULATIONS.

1.5 SEQUENCE AND STAGING

THIS SECTION WILL BE DEVELOPED BY THE CONTRACTOR USING THE GUIDANCE OUTLINED IN THE VTRANS EPSC PLAN CONTRACTOR CHECKLIST.

1.5.1 CONSTRUCTION SEQUENCE

1.5.2 OFF-SITE ACTIVITIES

IN ADDITION TO THE CONTRACTOR CHECKLIST ANY ACTIVITIES OUTSIDE THE CONSTRUCTION LIMITS SHALL FOLLOW SUBSECTIONS 105.25- 105.29 OF THE STANDARD SPECIFICATIONS FOR CONSTRUCTION.

REVISION	DATE	BY	DESCRIPTION
1	11/27/2017	VAOT	REVISED NOTE

PROJECT NAME: RICHFORD-SUTTON, PQ
PROJECT NUMBER: BHF 0814(1)

FILE NAME: s10c222forms.dgn
PROJECT LEADER: C. CARLSON
DESIGNED BY: C. BURRALL
EPSC NARRATIVE

PLOT DATE: 21-NOV-2017
DRAWN BY: G. ROKES
CHECKED BY: C. BURRALL
SHEET 83 OF 87

PODUNK VARIANT SILT LOAM
0% - 2% SLOPES
NOT HIGHLY ERODIBLE
HYDRAULIC GROUP B
K = 0.32

WOODSTOCK-ROCK OUTCROP COMPLEX
15% - 25% SLOPES
HIGHLY ERODIBLE
HYDRAULIC GROUP D
K = 0.24

N/F
UNITED STATES OF AMERICA
BORDER PATROL STATION

N/F
MCALLISTER, ROBERT A.
& SHAWNA L.

STATE OF VERMONT

MISSISQUOI RIVER

VT STATE PLANE GRID

N=915409.04
E=1617705.64
STA: 59+22.83, 42.62' LT

R=278.10' L=89.63'

EXISTING R.O.W.

271.18
N39°39'55"W

VT 105A TO
RICHFORD

MISSISQUOI VALLEY ROAD
TO GLEN SUTTON, QC

I&M(P)

R=361.10' L=111.81'

N=915462.01
E=1617769.54
STA: 59+27.76, 40.24' RT

EXISTING R.O.W.

184.98
N39°39'55"W

CONST(T)

EXISTING TOWN R.O.W.

END R.O.W. PROJECT
RICHFORD-SUTTON, PQ BHF 0814(1)
STA. 58+73 RT, 42.52'

1
TOWN OF RICHFORD

BEGIN R.O.W. PROJECT
RICHFORD-SUTTON, PQ BHF 0814(1)
STA. 58+53 RT, 70.13'

N/F
GROSS, BARBARA

COLTON GRAVELLY LOAMY SAND
2% - 8% SLOPES
POTENTIALLY HIGHLY ERODIBLE
HYDRAULIC GROUP A
K = 0.17

SCALE 1" = 20'-0"
20 0 20

REVISION	DATE	BY	DESCRIPTION
1	11/27/2017	VAOT	REVISED HISTORIC AND ARCHAEOLOGICAL RESOURCE AREAS

PROJECT NAME: RICHFORD-SUTTON, PQ
PROJECT NUMBER: BHF 0814(1)

FILE NAME: s10c222bdr_epsc.dgn
PROJECT LEADER: C. CARLSON
DESIGNED BY: C. BURRALL
EPSC EXISTING CONDITION

PLOT DATE: 21-NOV-2017
DRAWN BY: G. ROKES
CHECKED BY: C. BURRALL
SHEET 84 OF 87

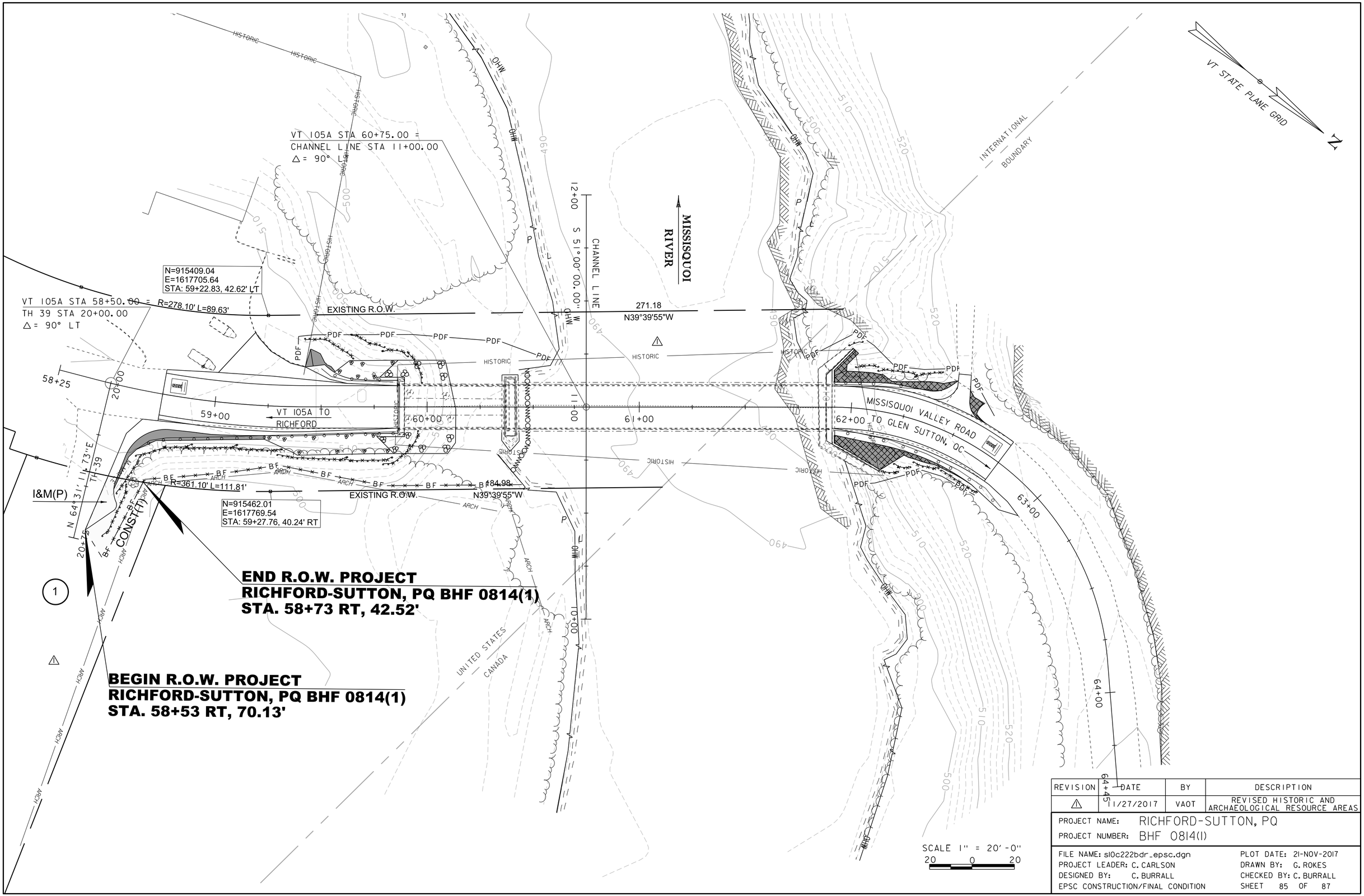

REVISION	DATE	BY	DESCRIPTION
△	11/27/2017	VAOT	REVISED HISTORIC AND ARCHAEOLOGICAL RESOURCE AREAS

PROJECT NAME: RICHFORD-SUTTON, PQ
PROJECT NUMBER: BHF 0814(1)

FILE NAME: s10c222bdr_epsc.dgn
PROJECT LEADER: C. CARLSON
DESIGNED BY: C. BURRALL
EPSC CONSTRUCTION/FINAL CONDITION

PLOT DATE: 21-NOV-2017
DRAWN BY: G. ROKES
CHECKED BY: C. BURRALL
SHEET 85 OF 87

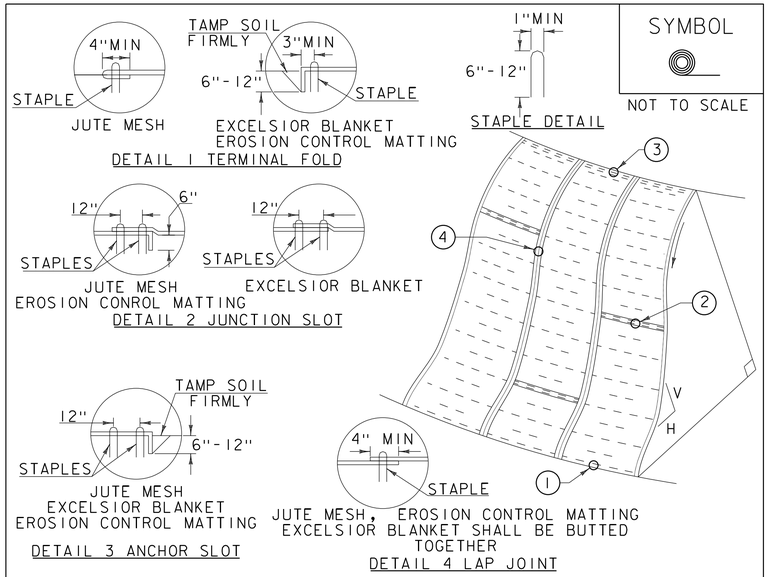

SYMBOL

NOT TO SCALE

CONSTRUCTION SPECIFICATIONS

1. APPLY TO SLOPES GREATER THAN 3H:1V OR WHERE NECESSARY TO AID IN ESTABLISHING VEGETATION.
2. APPLY FERTILIZER, LIME SEED PRIOR TO PLACING MATTING.
3. STAPLES ARE TO BE PLACED ALTERNATELY, IN COLUMNS APPROXIMATELY 2' APART AND IN ROWS APPROXIMATELY 3' APART. APPROXIMATELY 175 STAPLES ARE REQUIRED PER 4'X225' ROLL OF MATERIAL AND 125 STAPLES ARE REQUIRED PER 4'X150' ROLL OF MATERIAL.
4. DISTURBED AREAS SHALL BE SMOOTHLY GRADED. EROSION CONTROL MATERIAL SHALL BE PLACED LOOSELY OVER GROUND SURFACE. DO NOT STRETCH.
5. ALL TERMINAL ENDS AND TRANSVERSE LAPS SHALL BE STAPLED AT APPROXIMATELY 12" INTERVALS.

ADAPTED FROM DETAILS PROVIDED BY: NEW YORK STATE DEC
ORIGINALLY DEVELOPED BY USDA-NRCS
VERMONT DEPARTMENT OF ENVIRONMENTAL CONSERVATION

ROLLED EROSION CONTROL PRODUCT (RECP) SIDE SLOPE

NOTES:
REFER TO "THE VERMONT STANDARDS & SPECIFICATIONS FOR EROSION PREVENTION & SEDIMENT CONTROL -2006- "FROM THE VT AGENCY OF NATURAL RESOURCES FOR ADDITIONAL GUIDANCE.
THIS WORK SHALL BE PERFORMED IN ACCORDANCE WITH SECTION 653 AND AS SHOWN IN THE PLANS FOR TEMPORARY EROSION MATTING (PAY ITEM 653.20) ~~OR PERMANENT EROSION MATTING (PAY ITEM 653.21).~~

REVISIONS	
APRIL 16, 2007	JMF
JANUARY 13, 2009	WHF

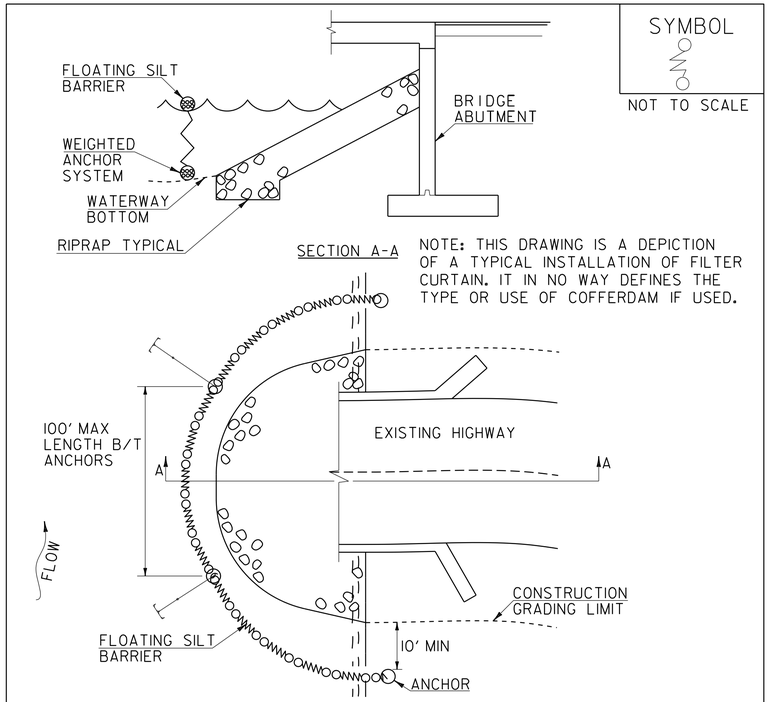

SYMBOL

NOT TO SCALE

NOTE: THIS DRAWING IS A DEPICTION OF A TYPICAL INSTALLATION OF FILTER CURTAIN. IT IN NO WAY DEFINES THE TYPE OR USE OF COFFERDAM IF USED.

CONSTRUCTION SPECIFICATIONS

1. FILTER CURTAIN SHALL NOT BE PLACED ACROSS A FLOWING WATERWAY, OR IN A WATERWAY WITH STREAM VELOCITIES GREATER THAN 1.5 FEET/SECOND.
2. MAXIMUM 100' LENGTH BETWEEN ANCHORS.
3. LAST SECTION SHALL TERMINATE A MINIMUM OF 10' BEYOND LIMIT OF DISTURBANCE.
4. THE WEIGHTED ANCHOR SYSTEM SHALL BE A TYPE WHICH ALLOWS THE CURTAIN TO CONFORM TO THE BOTTOM OF THE WATERWAY.
5. THE CURTAIN SHALL BE REMOVED BY SLOWLY PULLING TOWARD THE SHORE MINIMIZING THE ESCAPE OF SEDIMENTS INTO WATERWAY.

FILTER CURTAIN

THIS WORK SHALL BE PERFORMED IN ACCORDANCE WITH SECTION 649 FOR GEOTEXTILE FOR FILTER CURTAIN (PAY ITEM 649.61).

REVISIONS	
APRIL 1, 2008	WHF
JANUARY 13, 2009	WHF
SEPTEMBER 4, 2009	WHF

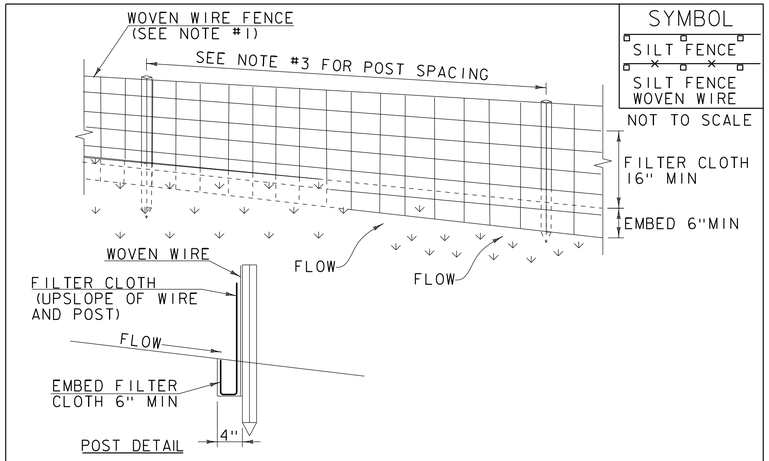

SYMBOL

SILT FENCE

SILT FENCE WOVEN WIRE

NOT TO SCALE

CONSTRUCTION SPECIFICATIONS

1. WOVEN WIRE REINFORCED FENCE IS REQUIRED WITHIN 100' UPSLOPE OF RECEIVING WATERS WHEN THE PROJECT FALLS UNDER A CONSTRUCTION STORMWATER PERMIT. WOVEN WIRE SHALL BE A MIN. 14 GAUGE WITH A 6" MAX. MESH OPENING.
2. FILTER CLOTH SHALL BE EITHER FILTER X, MIRAFI100X, STABILINKA T140N OR APPROVED EQUIVALENT.
3. POST SPACING FOR WIRE-BACKED FENCE SHALL BE 10' MAXIMUM. FOR FILTER-CLOTH FENCE, WHEN ELONGATION IS >50%, POST SPACING SHALL NOT EXCEED 4' AND WHEN ELONGATION IS <50%, POST SPACING SHALL NOT EXCEED 6'.
4. WOVEN WIRE FENCE IS TO BE FASTENED SECURELY TO FENCE POSTS WITH WIRE TIES. FILTER CLOTH IS TO BE FASTENED SECURELY TO WOVEN WIRE FENCE WITH TIES SPACED EVERY 24" AT TOP AND MID SECTION.
5. WHEN TWO SECTIONS OF FILTER CLOTH ADJOIN EACH OTHER THEY SHALL BE OVER-LAPPED BY 6" AND FOLDED.
6. MAINTENANCE SHALL BE PERFORMED AS NEEDED AND MATERIAL REMOVED WHEN SEDIMENT REACHES HALF OF FABRIC HEIGHT.

ADAPTED FROM DETAILS PROVIDED BY: NEW YORK STATE DEC
ORIGINALLY DEVELOPED BY USDA-NRCS
VERMONT DEPARTMENT OF ENVIRONMENTAL CONSERVATION

SILT FENCE

NOTES:
REFER TO "THE VERMONT STANDARDS & SPECIFICATIONS FOR EROSION PREVENTION & SEDIMENT CONTROL -2006- "FROM THE VT AGENCY OF NATURAL RESOURCES FOR ADDITIONAL GUIDANCE.

THIS WORK SHALL BE PERFORMED IN ACCORDANCE WITH SECTION 649 AND AS SHOWN IN THE PLANS FOR ~~GEOTEXTILE FOR SILT FENCE (PAY ITEM 649.51) OR~~ GEOTEXTILE FOR SILT FENCE, WOVEN WIRE REINFORCED (PAY ITEM 649.515).

REVISIONS	
MARCH 21, 2008	WHF
DECEMBER 11, 2008	WHF
JANUARY 13, 2009	WHF

PROJECT NAME: RICHFORD-SUTTON, PQ
PROJECT NUMBER: BHF 0814(1)

FILE NAME: s10c222epscdet.dgn
PROJECT LEADER: C. CARLSON
DESIGNED BY: C. BURRALL
EPSC DETAIL 1

PLOT DATE: 26-SEP-2017
DRAWN BY: G. ROKES
CHECKED BY: C. BURRALL
SHEET 86 OF 87

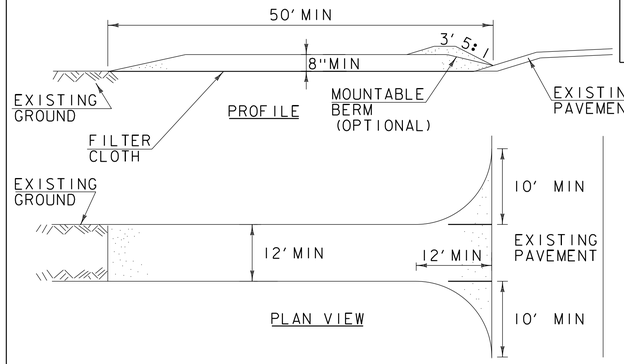

SYMBOL

NOT TO SCALE

CONSTRUCTION SPECIFICATIONS

1. STONE SIZE- USE 1-4" STONE, RECLAIMED OR RECYCLED CONCRETE EQUIVALENT.
2. LENGTH- NOT LESS THAN 50' (EXCEPT ON A SINGLE RESIDENCE LOT WHERE A 30' MINIMUM LENGTH APPLIES).
3. THICKNESS- NOT LESS THAN 8".
4. WIDTH- 12' MINIMUM, BUT NOT LESS THAN THE FULL WIDTH AT POINTS WHERE INGRESS OR EGRESS OCCURS. 24' IF SINGLE ENTRANCE TO SITE.
5. GEOTEXTILE MUST BE PLACED OVER THE ENTIRE AREA PRIOR TO PLACING STONE.
6. SURFACE WATER- ALL SURFACE WATER FLOWING OR DIVERTED TOWARD CONSTRUCTION ENTRANCES SHALL BE PIPED BENEATH THE ENTRANCE. IF PIPING IS IMPRACTICAL, A MOUNTABLE BERM WITH 5:1 SLOPES WILL BE PERMITTED.
7. MAINTENANCE- THE ENTRANCE SHALL BE MAINTAINED IN A CONDITION WHICH WILL PREVENT TRACKING OR FLOWING OF SEDIMENT ONTO PUBLIC RIGHTS-OF-WAY, ALL SEDIMENT SPILLED, DROPPED, WASHED OR TRACKED ONTO PUBLIC RIGHTS-OF-WAY MUST BE REMOVED IMMEDIATELY.
8. WHEN WASHING IS REQUIRED, IT SHALL BE DONE ON AN AREA STABILIZED WITH STONE AND WHICH DRAINS INTO AN APPROVED SEDIMENT TRAPPING DEVICE.
9. PERIODIC INSPECTION AND NEEDED MAINTENANCE SHALL BE PROVIDED ACCORDING TO PERMIT REQUIREMENTS.

ADAPTED FROM DETAILS PROVIDED BY: NEW YORK STATE DEC
ORIGINALLY DEVELOPED BY USDA-NRCS
VERMONT DEPARTMENT OF ENVIRONMENTAL CONSERVATION

STABILIZED CONSTRUCTION ENTRANCE

NOTES:
REFER TO "THE VERMONT STANDARDS & SPECIFICATIONS FOR EROSION PREVENTION & SEDIMENT CONTROL -2006- " FROM THE VT AGENCY OF NATURAL RESOURCES FOR ADDITIONAL GUIDANCE.

THIS WORK SHALL BE PERFORMED IN ACCORDANCE WITH SECTION 653 FOR VEHICLE TRACKING PAD (PAY ITEM 653.35) OR AS SPECIFIED IN THE CONTRACT.

REVISIONS	
MARCH 24, 2008	WHF
JANUARY 13, 2009	WHF

VAOT LOW GROW/FINE FESCUE MIX

	LBS/AC					
WEIGHT	BROADCAST	HYDROSEED	NAME	LATIN NAME	GERM	PURITY
38%	57	95	CREEPING RED FESCUE	FESTUCA RUBRA VAR. RUBRA	90%	98%
29%	43.5	72.5	HARD FESCUE	FESTUCA LONGIFOLIA	85%	95%
15%	22.5	37.5	CHEWINGS FESCUE	FESTUCA RUBRA VAR. COMMUTATA	87%	95%
15%	22.5	37.5	ANNUAL RYEGRASS	LOLIUM MULTIFLORUM	90%	95%
3%	4.5	7.5	INERTS			
100%	150	250				

VAOT RURAL AREA MIX

	LBS/AC					
WEIGHT	BROADCAST	HYDROSEED	NAME	LATIN NAME	GERM	PURITY
37.5%	22.5	45	CREEPING RED FESCUE	FESTUCA RUBRA VAR. RUBRA	85%	98%
37.5%	22.5	45	TALL FESCUE	FESTUCA ARUNDINACEA	90%	95%
5.0%	3	6	RED TOP	AGROSTIS GIGANTEA	90%	95%
15.0%	9	18	WHITE FIELD CLOVER	TRIFOLIUM REPENS	85%	98%
5.0%	3	6	ANNUAL RYE GRASS	LOLIUM MULTIFLORUM	85%	95%
100%	60	120				

GENERAL AMENDMENT GUIDANCE

FERTILIZER	LIME	
10/20/10	AG LIME	PELLITIZED
500 LBS/AC	2 TONS/AC	1 TONS/AC

CONSTRUCTION GUIDANCE

1. SEED MIX: THE CONTRACTOR SHALL COORDINATE WITH THE RESIDENT ENGINEER ON WHICH SEED MIX TO USE.
2. SEED MIX: USE AS INDICATED IN THE PLANS AND/OR FOR ALL ESTABLISHED UPLAND (NON WETLAND) AREAS DISTURBED BY THE CONTRACTOR.
3. ALL SEED MIXTURES: SHALL NOT HAVE A WEED CONTENT EXCEEDING 0.40% BY WEIGHT AND SHALL BE FREE OF ALL NOXIOUS SEED.
4. FERTILIZER AND LIMESTONE: SHALL FOLLOW RATES SHOWN ON PLAN OR AS DIRECTED BY THE ENGINEER.
5. HAY MULCH: TO BE PLACED ON EARTH SLOPES AT THE RATE OF 2 TONS/ACRE, ACHIEVE 90% GROUND COVER OR AS DIRECTED BY THE ENGINEER.
6. HYDROSEEDING: ALTHOUGH GUIDANCE IS GIVEN ABOVE THE SITE CONDITIONS AND THE TYPE OF HYDROSEED PROPOSED FOR USE WILL ULTIMATELY DICTATE THE AMOUNTS AND TYPES OF SOIL AMENDMENTS TO BE APPLIED.
7. TURF ESTABLISHMENT: PLACING SEED, FERTILIZER, LIME AND MULCH PRIOR TO SEPTEMBER 15 AND AFTER APRIL 15 CAN BETTER ENSURE A VIGOROUS GROWTH OF GRASS.

ADAPTED FROM VTRANS TECHNICAL LANDSCAPE MANUAL FOR ROADWAYS AND TRANSPORTATION FACILITIES

TURF ESTABLISHMENT

THIS WORK SHALL BE PERFORMED IN ACCORDANCE WITH SECTION 651 FOR SEED (PAY ITEM 651.15)

REVISIONS	
JANUARY 12, 2015	WHF

PROJECT NAME: RICHFORD-SUTTON, PQ
PROJECT NUMBER: BHF 0814(1)

FILE NAME: s10c222epscdet.dgn
PROJECT LEADER: C. CARLSON
DESIGNED BY: C. BURRALL
EPSC DETAIL 2

PLOT DATE: 26-SEP-2017
DRAWN BY: G. ROKES
CHECKED BY: C. BURRALL
SHEET 87 OF 87

FED. ROAD DIST. NO.	STATE	F.R. PROJ. NO.	FISCAL YEAR	SHEET NO.	TOTAL SHEETS
9	VT.	20B		1	13

INDEX OF SHEETS

SHEET NO. 1 TITLE PAGE
" " 2 TYPICAL CROSS-SECTION OF IMPROVEMENT 24' GRAVEL
" " 3 PLAN AND PROFILE
" " 4 SERIES SB 20 NO. 150' SPAN
" " 5 SUPERSTRUCTURE DETAILS
" " 6 SERIES SB NO. 1
" " 7-8-9 SUBSTRUCTURE
" " 10 SERIES SB NO. 2
" " 11-12 CROSS SECTIONS
" " 13 SERIES S19 STANDARD STRUCTURES (Cable Guard Rail)

STATE OF VERMONT
STATE HIGHWAY DEPARTMENT

PLAN AND PROFILE OF PROPOSED STATE HIGHWAY

FLOOD RELIEF PROJECT

INTERNATIONAL BRIDGE
BETWEEN SUTTON P.Q. CANADA & EAST RICHFORD VT. U. S. A.

TOWN OF RICHFORD

LENGTH OF PROJECT, 254.0 FT. = 0.048 MILES
TOTAL LENGTH OF BRIDGE, 20525 FT. = 0.038 MILES

FOR LAYOUT
SEE SHEET NO. 3

SCALES

PLAN 20 FT. = 1 INCH
HORIZONTAL 20 FT. = 1 INCH
VERTICAL 20 " = 1 "
SECTIONS 5 " = 1 "

THIS PROJECT TO BE CONSTRUCTED IN ACCORDANCE WITH STANDARD SPECIFICATIONS ON FILE WITH THE U. S. BUREAU OF PUBLIC ROADS. APPROVED JULY 7 '26.

THESE PLANS ARE SUBJECT TO SUCH REVISIONS AS MAY BE REQUIRED BY THE BUREAU OF PUBLIC ROADS OR THE ENGINEER.

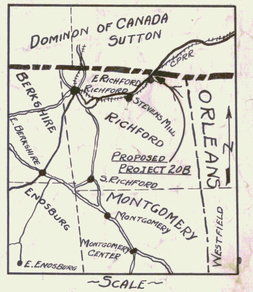

APPROVED: IN GENERAL [signature] CHIEF ENGINEER
DEPT. OF PUBLIC WORKS & LABOR
QUEBEC DEC. 12TH 1928

APPROVED: Aug. 28, 1928
H. E. Sargent
CHIEF ENGINEER

SUBMITTED BY ORDER OF THE STATE HIGHWAY BOARD

S. B. Bolles
COMMISSIONER OF HIGHWAYS

RECOMMENDED [redacted]
DISTRICT ENGINEER
BUREAU OF PUBLIC ROADS

RECOMMENDED FOR APPROVAL [redacted]
CHIEF ENGINEER
BUREAU OF PUBLIC ROADS

APPROVED [redacted]
DIRECTOR - BUREAU OF PUBLIC ROADS

SERIES FR NO. 20B FILED
SHEET 1 OF 13

CONVENTIONAL SIGNS

COUNTY LINE
TOWN LINE
FENCE LINE
STONE WALL
UNFENCED PROPERTY
GUARD RAIL
TRAVELED WAY
RAILROAD
RETAINING WALL
CENTER LINE (30 PC. 30+65)
SURVEY LINE
CULVERT
DROP INLET
TROLLEY POLE
POWER POLE
TELEPHONE POLE
TREES
HEDGE

GROUND ELEVATION DATUM 126.8 LINE
GRADE ELEVATION DATUM 127.3 LINE

CURVE DATA

DEFLECTION ANGLE △
DEGREE OF CURVE D.
RADIUS OF CURVE R.
TANGENT DISTANCE T.
LENGTH OF CURVE L.
EXTERNAL DISTANCE E.
POINT OF INTERSECTION P. I.
POINT OF CURVE P. C.
POINT OF TANGENT P. T.
POINT ON TANGENT P.O.T.

RICHFORD-SUTTON BHF 0814(1)
REFERENCE PLANS
FOR INFORMATIONAL PURPOSES ONLY
SHEET 1 OF 49

PRINTED ON "IMPERIAL" TRACING BLACK
K & E CO. N.Y.

FED. ROAD DIST. NO.	STATE	FED. AID PROJ. NO.	FISCAL YEAR	SHEET NO.	TOTAL SHEETS
9	VT.	20-B	1920	3	13

NEW CABLE GUARD RAIL REQUIRED

Left
STA. 261+92 - STA. 262+14 Length 24 ft. 48
Right
STA. 261+92 - STA. 262+40 " 48 ft. 40
Total 72 ft.

GRAVEL SURFACE COURSE REQUIRED

STA. 261+92 - STA. 262+40 23 cu. yds.
Common excavation including borrow. 1800 cu. yds.

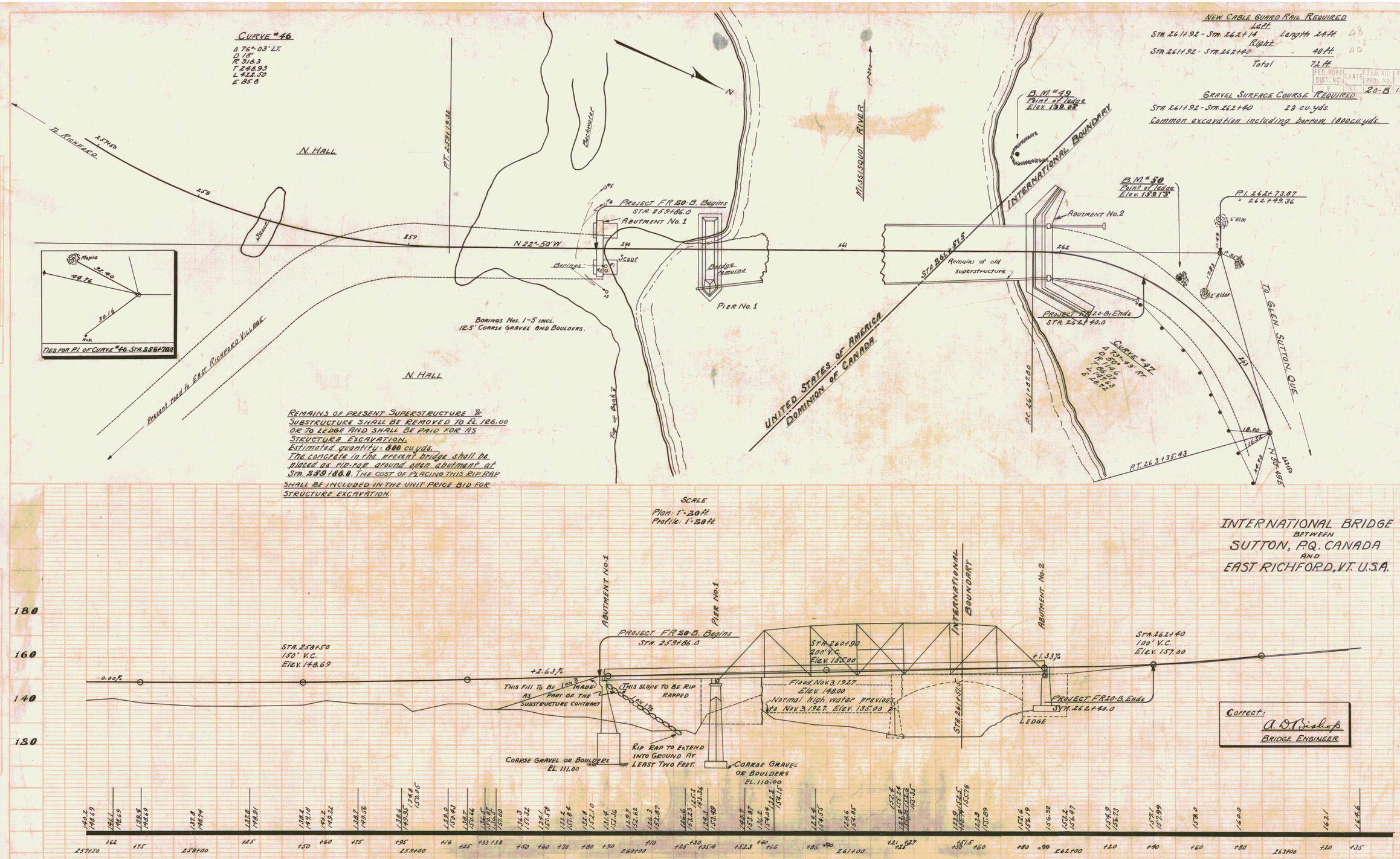

Correct:
A. D. Bishop
BRIDGE ENGINEER

B.M. #47 Spike in base of 24" Elm opposite the water-tower. Elev. 137.45
B.M. #48 Spike in base of 30" Elm, s. bank of river, below Int. Bridge. Elev. 139.67
B.M. #49 Point of ledge, n. side of river, below Int. Bridge. Elev. 139.05
B.M. #50 Point of ledge, at edge traveled way, n. of Int. Bridge. Elev. 139.15

RICHFORD-SUTTON BHF 0814(1)
REFERENCE PLANS
FOR INFORMATIONAL PURPOSES ONLY
SHEET 2 OF 49

SERIES F.R. #20-B
SHEET 3 OF 13

FED. ROAD DIST. NO.	STATE	F.F.R.	FISCAL YEAR	SHEET NO.	TOTAL SHEETS
9	VT.	20B	1928	5	13

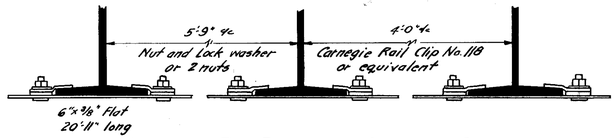

DETAIL OF TIE PLATE FOR APPROACH SPAN
Use one at ℄ of Span.

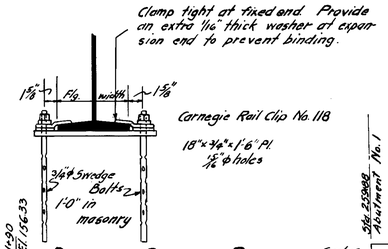

DETAIL OF BEARING PLATE

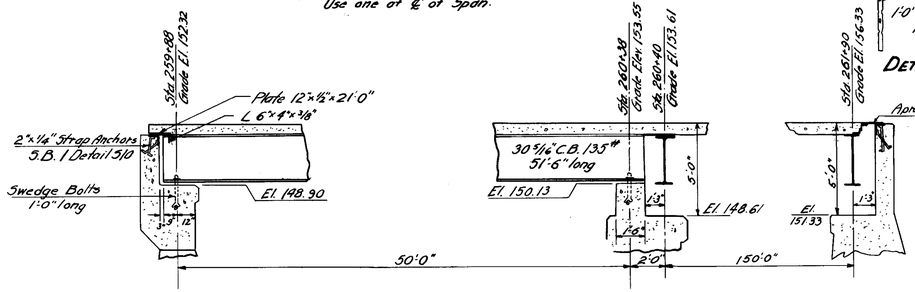

ELEVATION APPROACH SPAN
Scale: 1/4" = 1'-0"

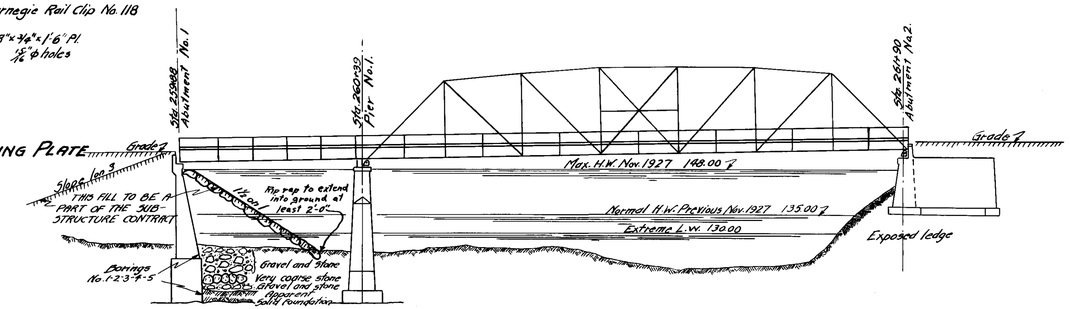

UPSTREAM ELEVATION
Scale: 1" = 20'-0"

Footings to be carried to firm foundation as directed by the engineer.

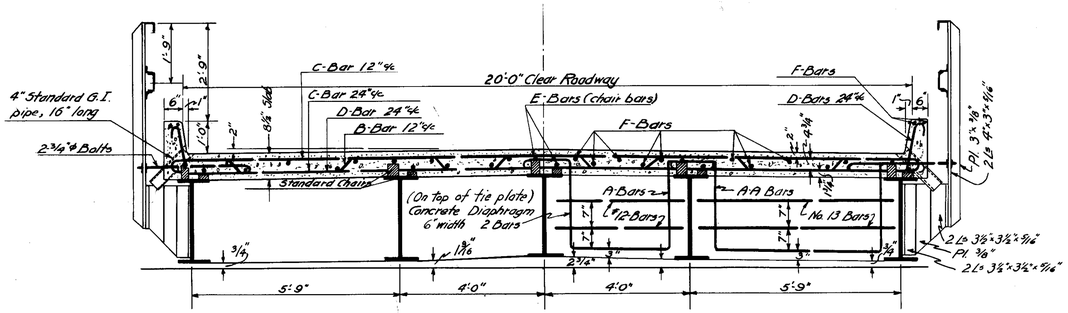

TYPICAL CROSS SECTION - APPROACH SPAN
Scale: 1/2" = 1'-0"

Floor slab to be Class A (1:2:4) Concrete, screeded floated and broomed. Dap concrete 1/2" over stringers. Vary elevation of stringers to give crown of 2" to concrete slab.

Floor slab shall be poured so that the finished grade of the roadway after the beams are deflected by full dead load will be the finished grade determined by the grade line on the topography sheet. Rails shall be so fabricated as to follow the above finished grade.

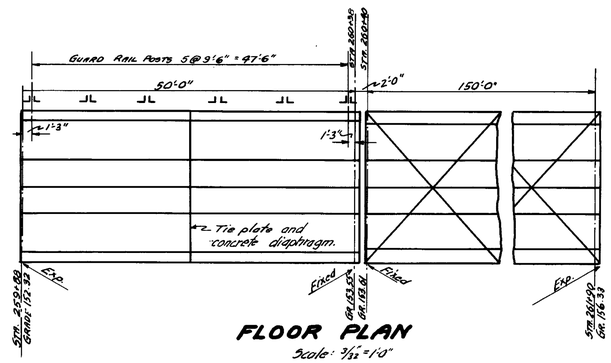

FLOOR PLAN
Scale: 3/32" = 1'-0"

Notes: Bearing plates in approach span to be machined to fit grade, distances to provide for roadway crown are given on ℄ Bearing on Typical Cross Section of Approach Spans.
No. E and F Bars in 50'-0" Span.
No. 10 and 11 " " 150'-0" " .

References: Standard Sheet SB1 - Details 5.10, 5.12, 5.13, 5.21
" " SB2 " 5.201
" " SB20 No. 150

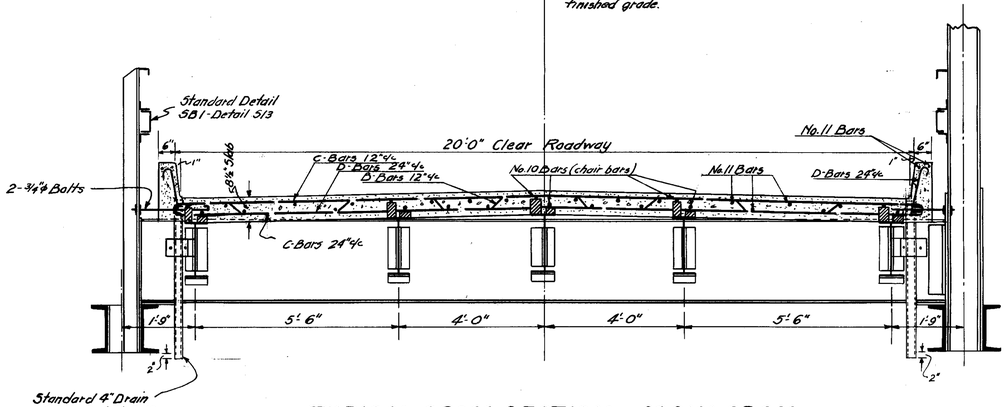

TYPICAL CROSS SECTION - MAIN SPAN
Scale: 1/2" = 1'-0"

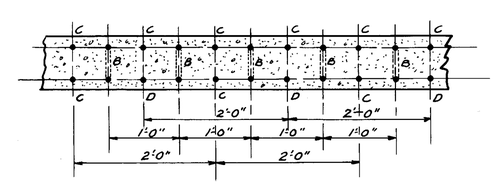

SECTION SHOWING TRANVERSE STEEL

Bar	Size	L'gth	STEEL SCHEDULE
A-A	1/2" ϕ	13'-7"	1'-2", 1'-2", 2" R., 3", 4'-5", 2'-8", 3"
A	1/2" ϕ	11'-10"	1'-2", 1'-2", 2" R., 2'-8", 2'-8", 3", 3"
B	5/8" ϕ	23'-4"	20'-2"
C	5/8" ϕ	21'-8"	20'-2", 2" R., 3", 3"
D	5/8" ϕ	24'-9"	20'-0", 1 1/2" R., 1'-3", 3"
E	3/4" ϕ	19'-0"	Straight Bar
F	1/2" ϕ	19'-0"	do
10	3/4" ϕ	22'-0"	do
11	1/2" ϕ	22'-0"	do
12	1/2" ϕ	3'-6"	do
13	1/2" ϕ	5'-3"	do

SUPERSTRUCTURE DETAILS

INTERNATIONAL BRIDGE
BETWEEN
SUTTON, P.Q. CANADA
AND
EAST RICHFORD, VT. U.S.A.

RICHFORD-SUTTON BHF 0814(1)
REFERENCE PLANS
FOR INFORMATIONAL PURPOSES ONLY
SHEET 3 OF 49

ESTIMATED QUANTITIES
(APPROACH SPAN)

Structural Steel	42,000 Lbs.
Reinforcing Steel	5,400 Lbs.
Concrete - Class A (1:2:4)	31 Cu. Yds.

For quantities on Main Span see STANDARD SHEET - SB 20 No. 150

Surveyed by	
Designed by	GARRAN
Drawn by	BARRETT
Traced by	A.G. 10/18/28
Checked by	S.B.L. 8/17/28
Series F.R.	No. 20B Filed
Sheet 5 of 13 Sheets	

PRINTED ON "IMPERIAL" TRACING CLOTH K & E CO., N.Y.

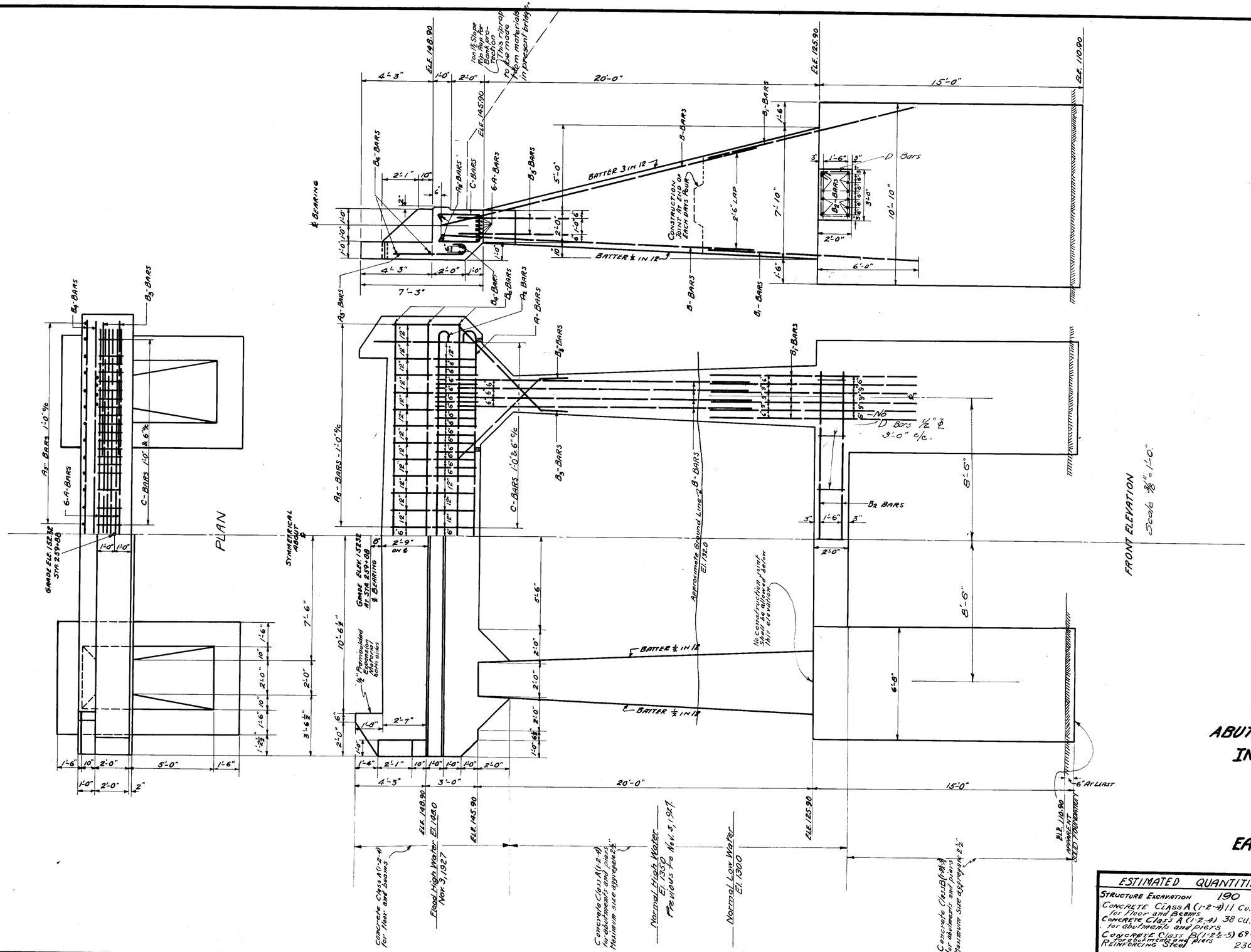

F.F.R.
20-B 1928 7 13

REINFORCING STEEL DETAILS

A-BAR 1" Sq.
23'-8"
TOTAL LGTH. 26'-0"

A2-BAR 3/4" RD.
23'-6"
3" RAD.
TOTAL LGTH. 25'-6"

A3-BAR 3/4" RD.
4'-0"
3" RAD.
TOTAL LGTH. 5'-0"

TOTAL LGTH.

BAR	SIZE	TOTAL LGTH.	
B	3/4" RD.	18'-0"	
B1	3/4" RD.	13'-0"	
B2	3/4" RD.	20'-0"	
B3	1" RD.	9'-0"	BENT IN FIELD
B4	1/2" RD.	25'-6"	

C-BAR 1/2" RD.
60°
1'-8"
2'-7"
TOTAL LGTH. 7'-4"

FOR GENERAL NOTES SEE SERIES SB #2-S221

CLASS A (1-2-4) CONCRETE ABOVE ELE. 145.90

CLASS B (1-2½-5) CONCRETE BELOW ELE. 145.90

FOR COPING DETAILS SEE SERIES SB #2-S207

CONCRETE ABOVE ELE. 148.90 TO BE POURED AFTER STEEL IS ERECTED.

D-Bars 1/2" ℄
Tot. Lgth. 9'-8"
7'-9"

RICHFORD-SUTTON BHF 0814(1)
REFERENCE PLANS
FOR INFORMATIONAL PURPOSES ONLY
SHEET 4 OF 49

ABUTMENT NO 1-AT STA. 259+88
INTERNATIONAL BRIDGE
BETWEEN
SUTTON, P.Q.-CANADA.
AND
EAST RICHFORD, VT.-U.S.A.

SCALE 3/8" = 1'-0"

ESTIMATED QUANTITIES

STRUCTURE EXCAVATION	190 CU. YDS.
CONCRETE CLASS A (1-2-4) for Floor and Beams	11 CU. YDS.
CONCRETE CLASS A (1-2-4) for abutments and piers	38 CU. YDS.
CONCRETE CLASS B (1-2½-5) for abutments and piers	69 CU. YDS.
REINFORCING STEEL	2300

Surveyed by		
Designed by	F.W.G	8/1/28
Drawn by	F.W.G	8/1/28
Traced by	D.W.P.	8/3/28
Checked by	J.B.L.	8/17-28
Series F.R. No. 20-B	Filed	
Sheet 7 of 13 Sheets		

FILED UNDER STATE HIGHWAY DEPARTMENT
F. P. R.
20-8 1928 8 13

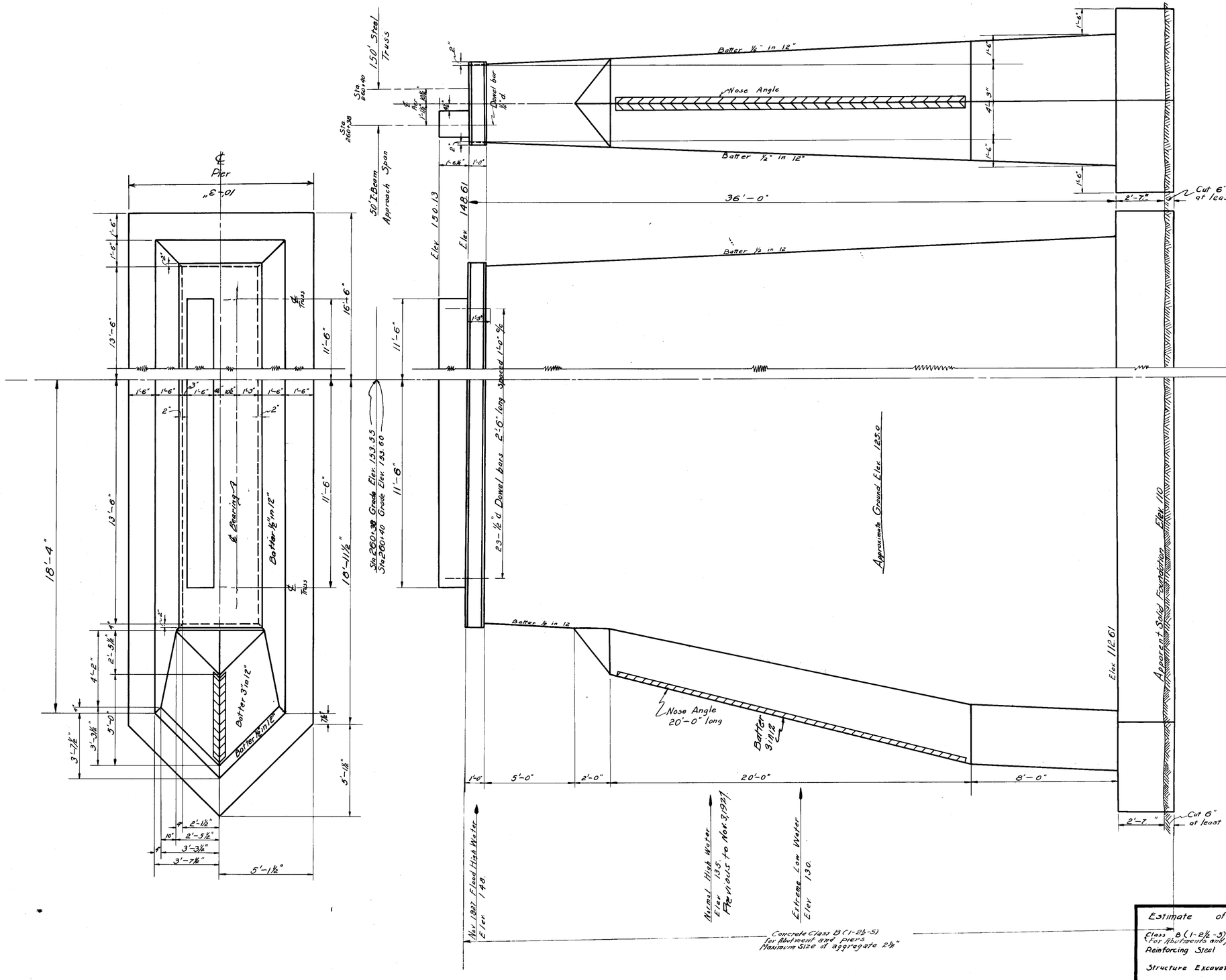

Notes:—
All concrete Class B (1-2½-5) for abutments and piers
For General Notes, see Series SB No 2 S-221
For Nose Angle Detail, see " " " S-207
For Construction Joint Detail, see " " " S-204
For Coping Detail, see " " " S-220

RICHFORD-SUTTON BHF 0814(1)
REFERENCE PLANS
FOR INFORMATIONAL PURPOSES ONLY
SHEET 5 OF 49

PIER No 1
FOR
INTERNATIONAL BRIDGE
BETWEEN
SUTTON, P.Q., CANADA
AND
EAST RICHFORD, VT., U.S.A.

SCALE: 3/8" = 1'-0"

Estimate of Quantities.		
Class B (1-2½-5) Concrete for Abutments and piers	280	cu. yds.
Reinforcing Steel	250	lbs.
Structure Excavation	10	cu. yds.

Surveyed by
Designed by F.W.G 8/2/28
Drawn by F.W.G. 8/2/28
Traced by W. A. Collins. 8/2/28.
Checked by J.B.L. 8/17-28
Series F. E. No. 20-B Filed
Sheet 8 of 13 Sheets

F.E.R. 20-B 1928 9 13

Notes:
All concrete to be class A(1-2-4) for abutments and piers
For General Notes see S.B. No. 2. Standard Detail 1.5221
Coping detail not shown, see S.B. No. 2. Standard Detail 1.5220
Weepholes not shown, see S.B. No. 2 Standard Detail 1.5221
Construction joint not shown, see Standard Detail 1.5204
Height, length and angle of wings may be varied by the Engineer in the field.

SCALE — 1/4" = 1'-0"

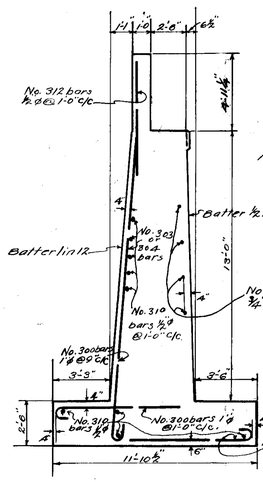

SECTION OF ABUTMENT A-A

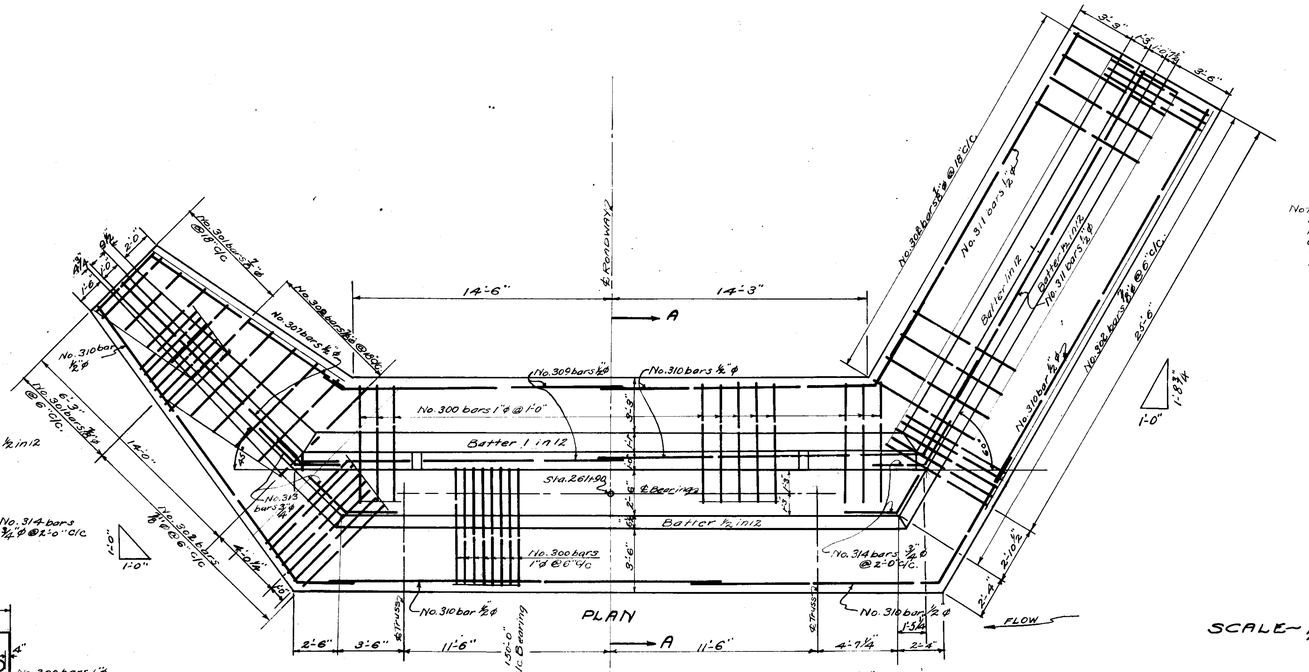

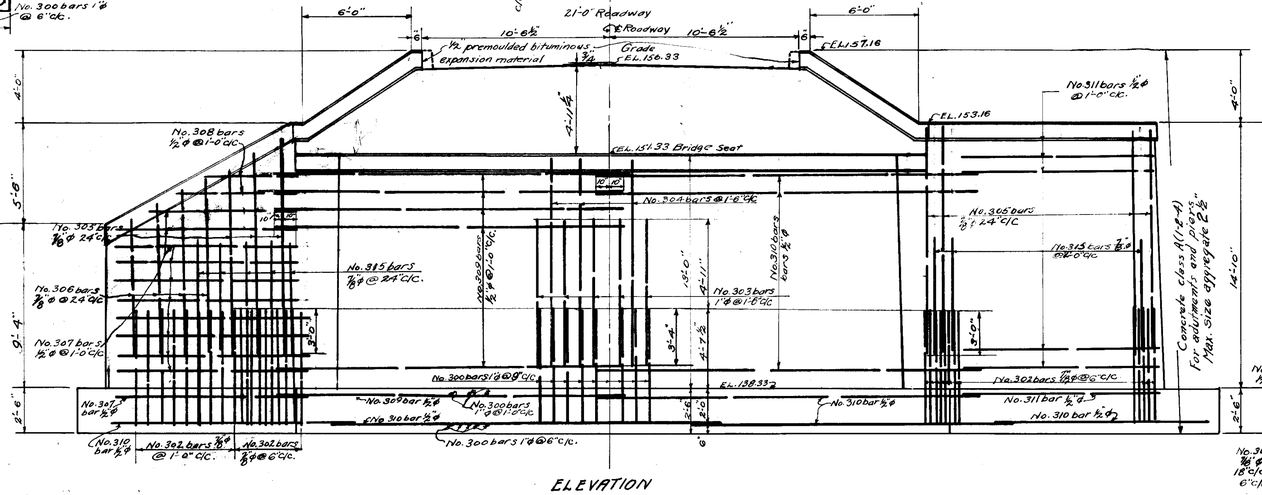

ELEVATION

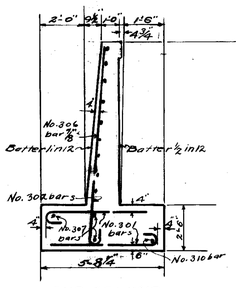

END OF WING

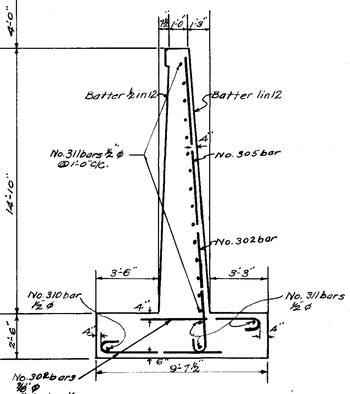

END OF WING

STEEL SCHEDULE		
Bar	Detail	Size
300	3" Rad. 3" 6'-6" Total Length 7'-6"	1"ϕ
301	4'-6" Total Length 5'-6"	⅞"ϕ
302	6'-6" Total Length 7'-6"	⅞"ϕ
303	Straight 8'-3"	1"ϕ
304	11'-8"	1"ϕ
305	12'-6"	⅞"ϕ
306	10'-0"	⅞"ϕ
307	13'-9"	½"ϕ
308	8'-3"	½"ϕ
309	19'-6"	½"ϕ
310	22'-0"	½"ϕ
311	21'-9"	½"ϕ
312	6'-6"	½"ϕ
313	5'-0" 45° 3'-0"	¾"ϕ
314	3'-0" 60° 3'-0"	¾"ϕ
315	7'-0"	⅞"ϕ

ABUTMENT NO. 2 AT STATION 261+90 INTERNATIONAL BRIDGE BETWEEN SUTTON, P.Q. CAN. AND RICHFORD, VT. U.S.A.

RICHFORD-SUTTON BHF 0814(1)
REFERENCE PLANS
FOR INFORMATIONAL PURPOSES ONLY
SHEET 6 OF 49

ESTIMATED QUANTITIES		
Class A for Abutments and Piers		
Concrete Class A(1-2-4)	160	Cu. Yds.
Reinforcing Steel	9160	Lbs.
Structure Excavation	150	Cu. Yds.

Surveyed by
Designed by F.W.G.
Drawn by L.A.D. 8/14/28
Traced by L.A.D. 8/15/28
Checked by J.B.A. 8/17-28
Series F.E. No. 20-B Filed
Sheet 9 of 13 Sheets

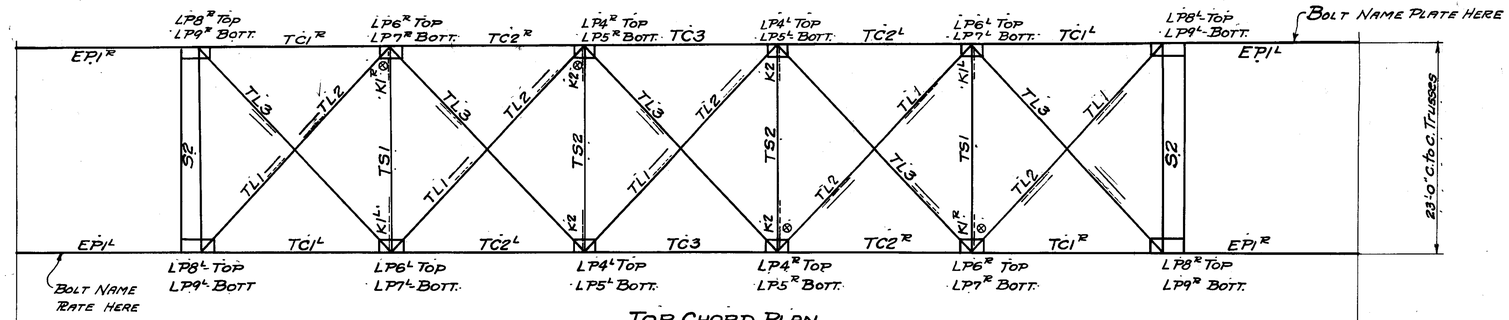

TOP CHORD PLAN

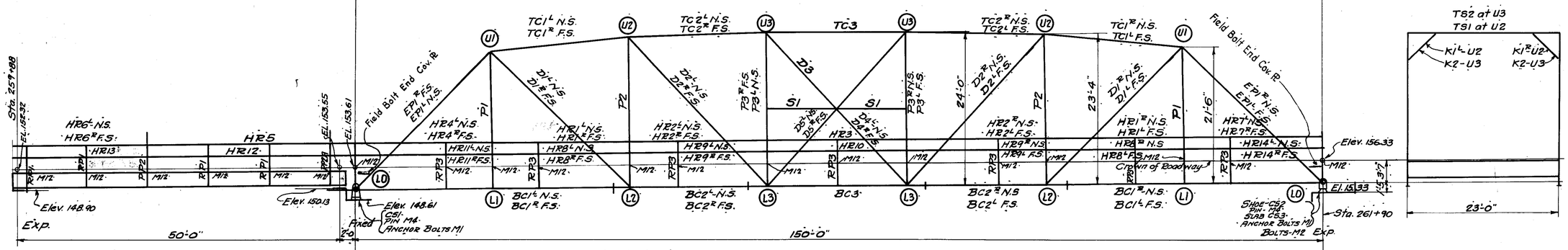

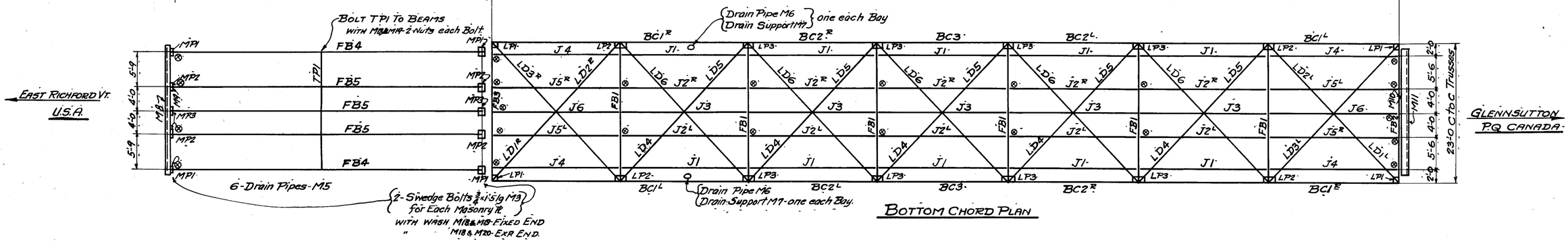

BOTTOM CHORD PLAN

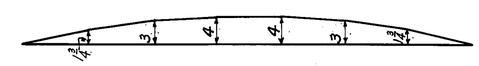

Camber Diagram

NOTE: FIELD CONNECTIONS-RIVETED
EXCEPT HAND RAIL TO BE BOLTED WITH 5/8" ϕ BOLTS WITH WASHER (HEX. HD. & NUT)
NOTE: TRUSSE TO BE ASSEMBLED IN SHOP & MATCH MARKED BEFORE SHIPMENT.
NO SUBPUNCHING OR REAMING.

RIVETS,
OPEN HOLES,
PAINT,

RICHFORD-SUTTON BHF 0814(1)
REFERENCE PLANS
FOR INFORMATIONAL PURPOSES ONLY
SHEET 7 OF 49

PITTSBURGH-DES MOINES STEEL CO.
PITTSBURGH, PA. DES MOINES, IA.
150'-0" THRU TRUSS SPAN
INTERNATIONAL BRIDGE BETW.
SUTTON P.Q. CANADA & EAST RICHFORD VT.

MADE M.W.W.	SHEET No. E1
TRACED J.E.S.	
CHECKED W.H. 4/14/48	CONTRACT No. E1118
REVISED	

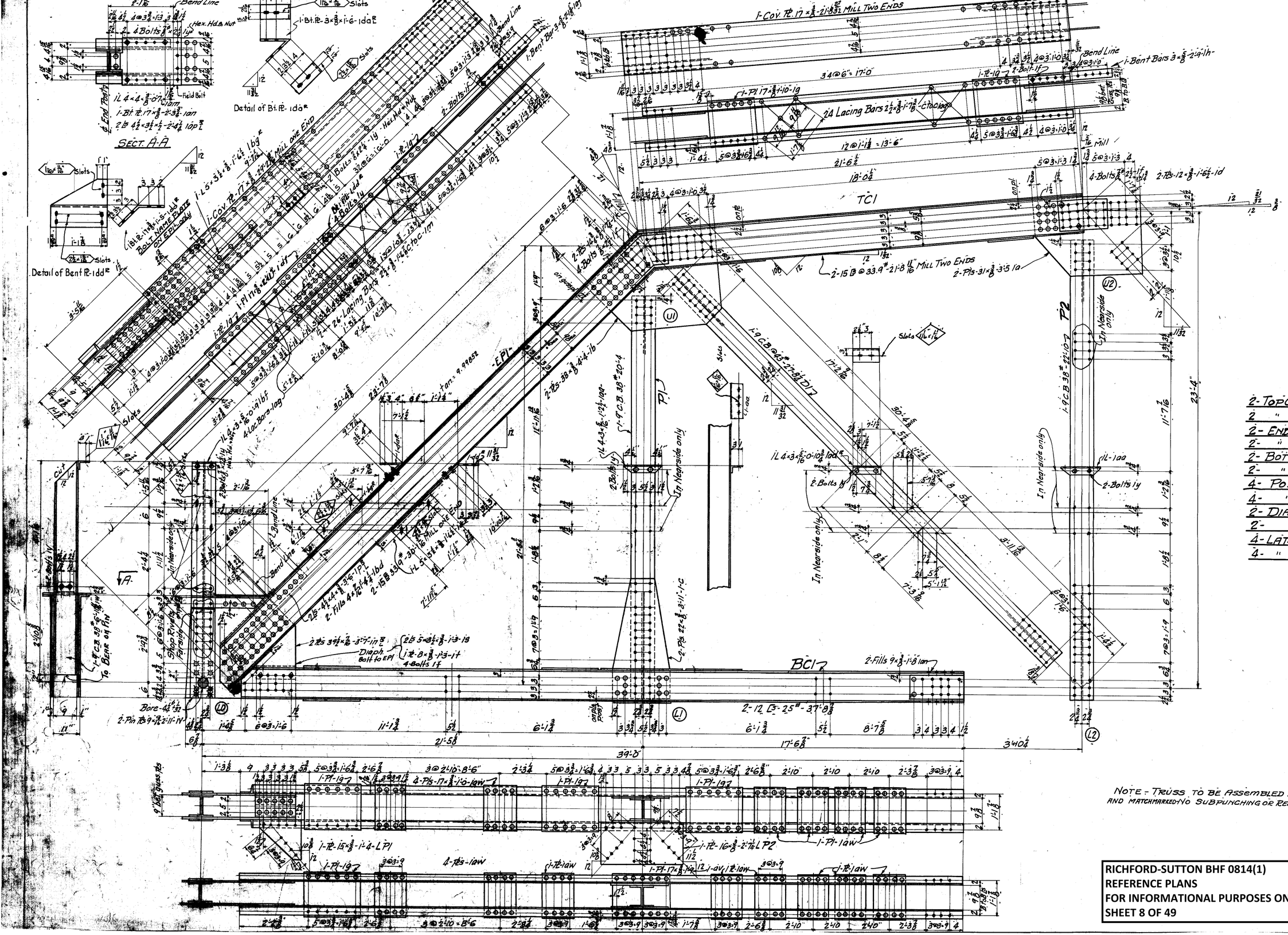

2- TOP CHORDS TC1R AS SHOWN
2 " " TC1L OPP. HAND
2- END POSTS- EP1R AS SHOWN
2- " " EP1L OPP. HAND
2- BOTT. CHORD BC1R AS SHOWN
2- " " BC1L OPP. HAND
4- POSTS- P1
4- " P2
2- DIAGONALS- D1R AS SHOWN
2- " D1L OPP. HAND
4- LAT. PLS- LP1
4- " PLS- LP2

NOTE - TRUSS TO BE ASSEMBLED IN SHOP AND MATCHMARKED - NO SUBPUNCHING OR REAMING.

RIVETS, 7/8 φ
OPEN HOLES, 15/16 φ unless noted
PAINT, See Spec.

RICHFORD-SUTTON BHF 0814(1)
REFERENCE PLANS
FOR INFORMATIONAL PURPOSES ONLY
SHEET 8 OF 49

PITTSBURGH-DES MOINES STEEL CO.
PITTSBURGH, PA. DES MOINES, IA.
150'-0 THRU TRUSS SPAN
INTERNATIONAL BRIDGE BETW.
SUTTON, P.Q. CANADA & EAST RICHFORD VT. U.S.A.

MADE MWW
TRACED JES
CHECKED WH 9/24/29
REVISED
SHEET No. 1
CONTRACT No. E1118

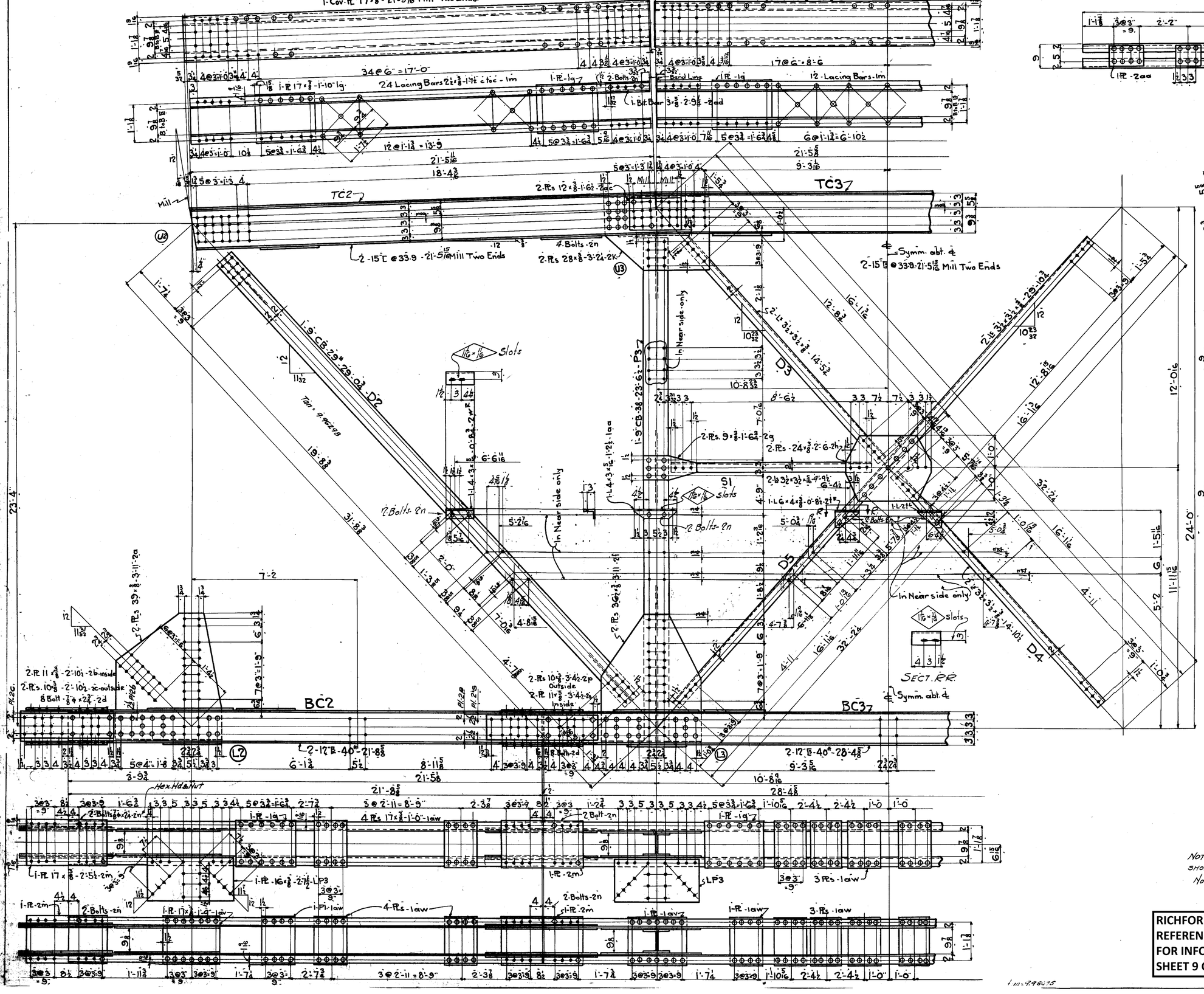

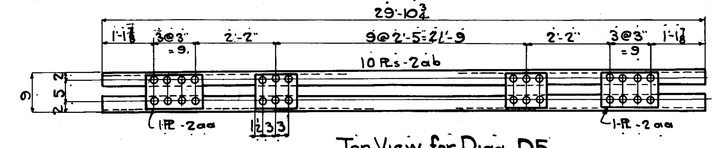

Top View for Diag. D5

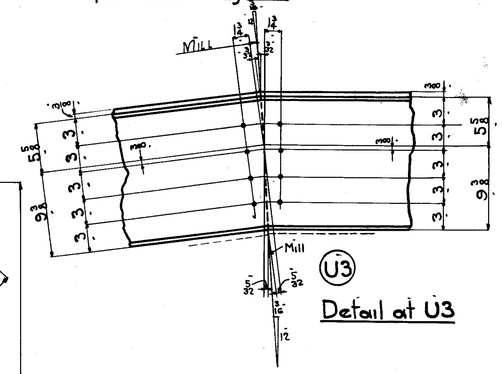

Detail at U3

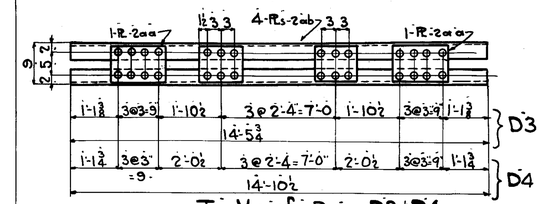

Top View for Diags. D3 & D4

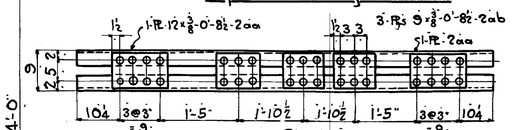

Top View Strut S1

2-Top Chords-TC2R as shown	2-Top Chords-TC2L opp. hand
2- " " -TC3 " "	
2-Botts Chords-BC2R as shown	2-Bott. Chords-BC2L opp. hand
2- " " -BC3 " "	
2-Posts - P3R as shown	2-Posts-P3L opp. hand
2-Diags. -D2R " "	2-Diags. -D2L " "
1- " -D4R " "	1- " -D4L " "
1- " -D5R " "	1- " -D5L " "
2- " -D3 " "	8-Lat. Pls-LP3
4-Struts-S1	

RIVETS, 7/8 ϕ
OPEN HOLES, 15/16 ϕ unless noted
PAINT, See Spec.

NOTE: TRUSS TO BE ASSEMBLED IN SHOP AND MATCH-MARKED
NO SUBPUNCHING OR REAMING.

RICHFORD-SUTTON BHF 0814(1)
REFERENCE PLANS
FOR INFORMATIONAL PURPOSES ONLY
SHEET 9 OF 49

PITTSBURGH-DES MOINES STEEL CO.
PITTSBURGH, PA. DES MOINES, IA.
150'-0" THRU TRUSS SPAN
INTERNATIONAL BRIDGE BETW.
SUTTON, P.Q. CANADA & EASTRICHFORD, VT.

MADE M.W.W.	SHEET No. 2
TRACED J.E.S.	
CHECKED W.H. 9/24/87	CONTRACT No. E1118
REVISED	

F.R.P.20B

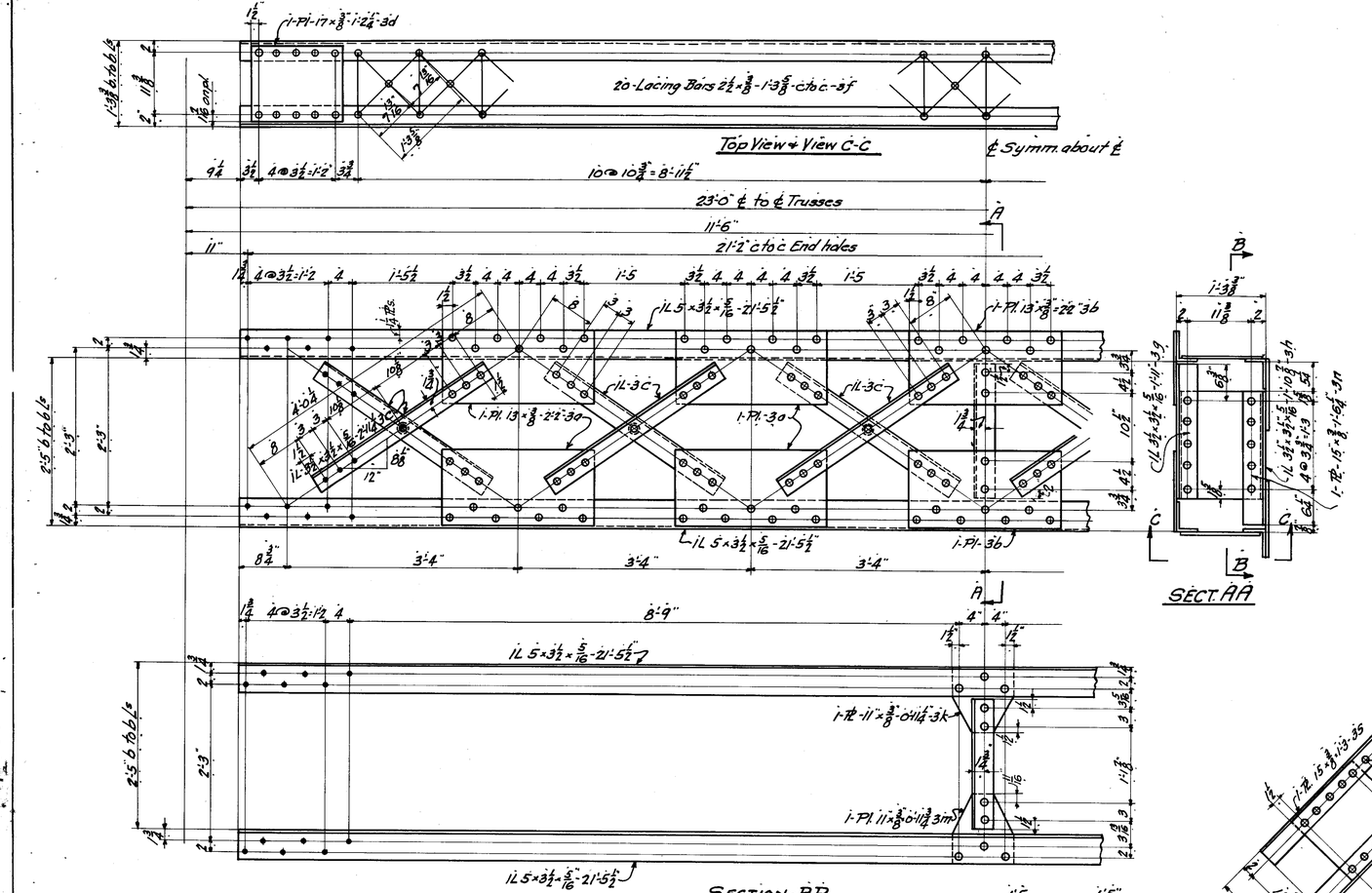

2-PORTALS-S2

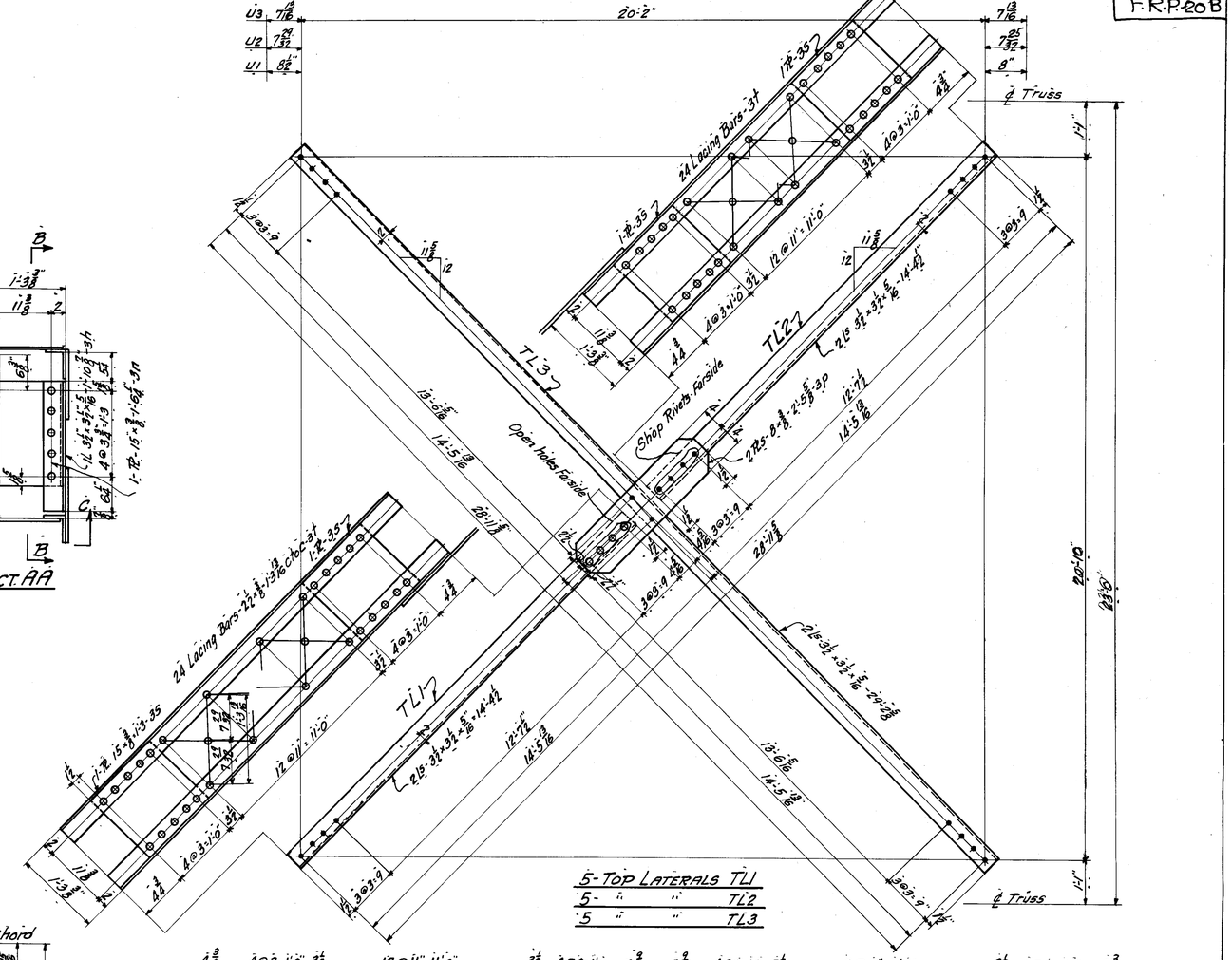

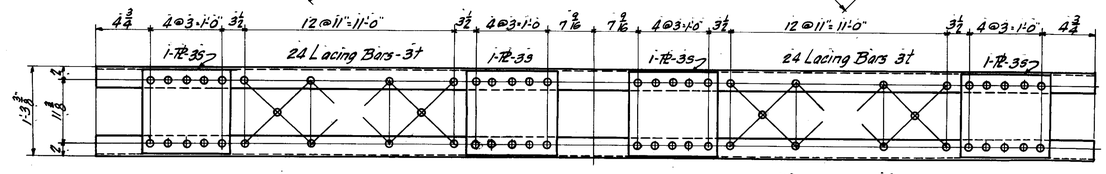

VIEW FOR TL3

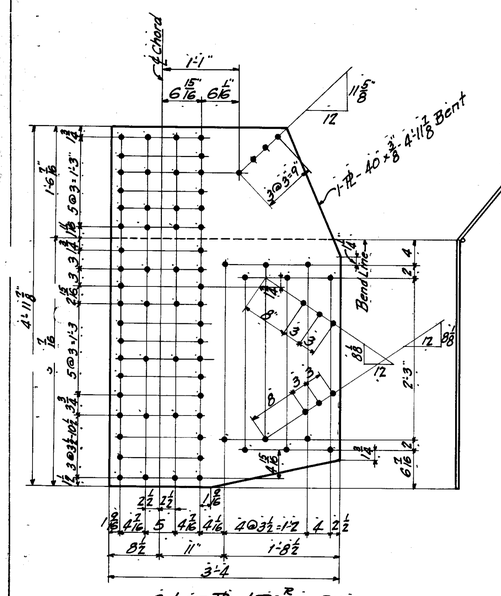

2-LAT. Pls-LP8R AS SHOWN
2- " " LP8L-opp. hand.

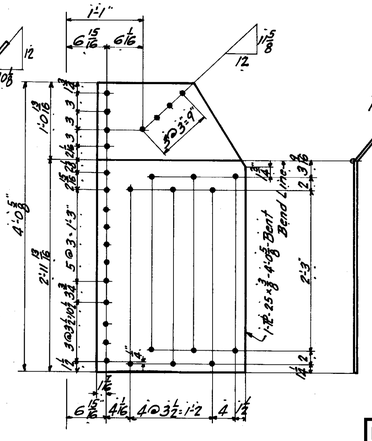

2-LAT. Pls-LP9R AS SHOWN
2- " " -LP9L-opp. hand

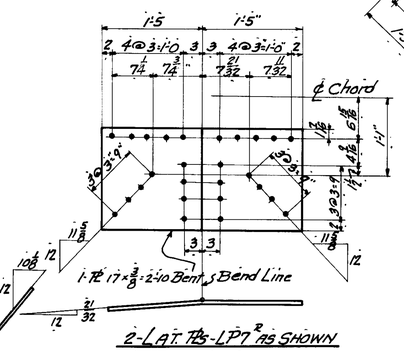

2-LAT. Pls-LP7R AS SHOWN
2- " " LP7L-opp. hand

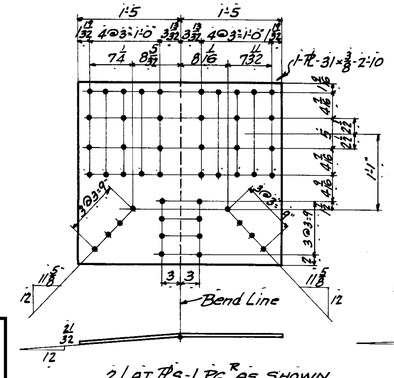

2-LAT. Pls-LP6R AS SHOWN
2- " " LP6L-opp. hand

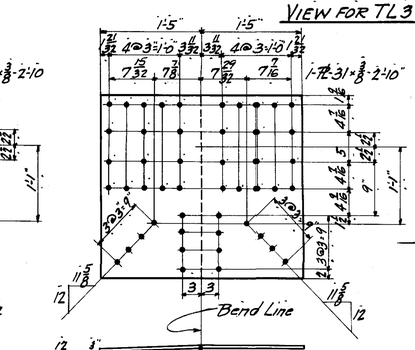

2-LAT. Pls-LP4R AS SHOWN
2- " " LP4L-opp. hand.

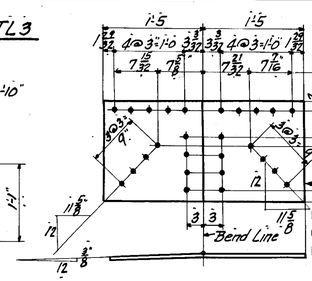

RIVETS, 7/8" ϕ
OPEN HOLES, 15/16" ϕ
PAINT, See Spec.
Washers 2½ ϕ × ⅜

2-LAT. Pls-LP5R AS SHOWN
2- " " LP5L-opp. hand

RICHFORD-SUTTON BHF 0814(1)
REFERENCE PLANS
FOR INFORMATIONAL PURPOSES ONLY
SHEET 10 OF 49

PITTSBURGH-DES MOINES STEEL CO.
PITTSBURGH, PA. DES MOINES, IA.
150'-0" THRU TRUSS SPAN
INTERNATIONAL BRIDGE BETW.
SUTTON PQ CANADA & EAST RICHFORD VT.

MADE M.N.W.	SHEET No. 3
TRACED J.E.S.	
CHECKED	CONTRACT No. E1118
REVISED	

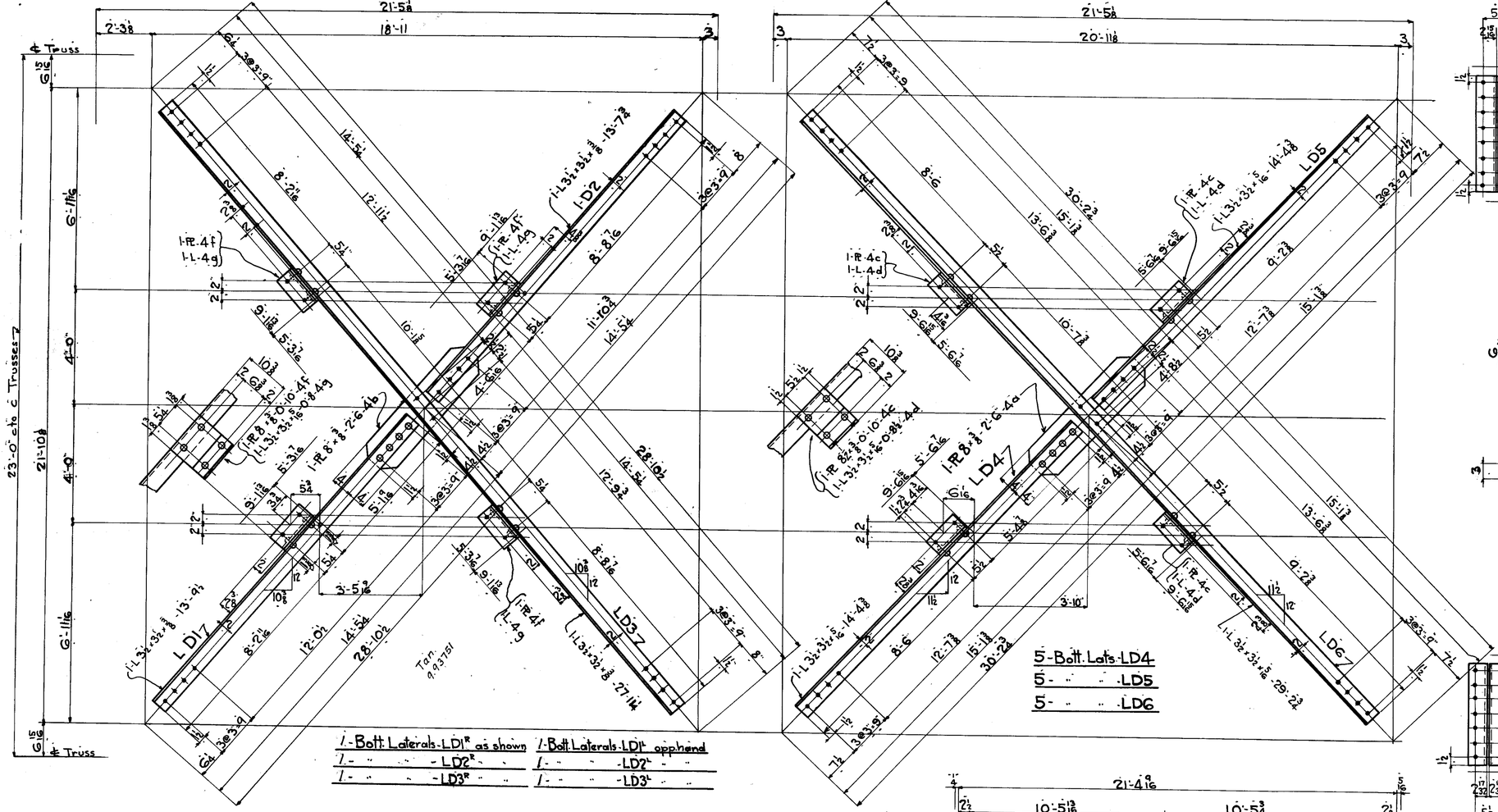

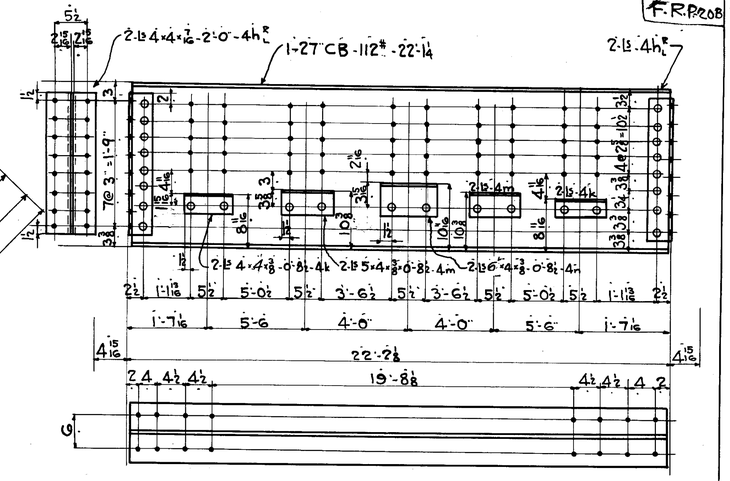

6-Floor Beams-FB1

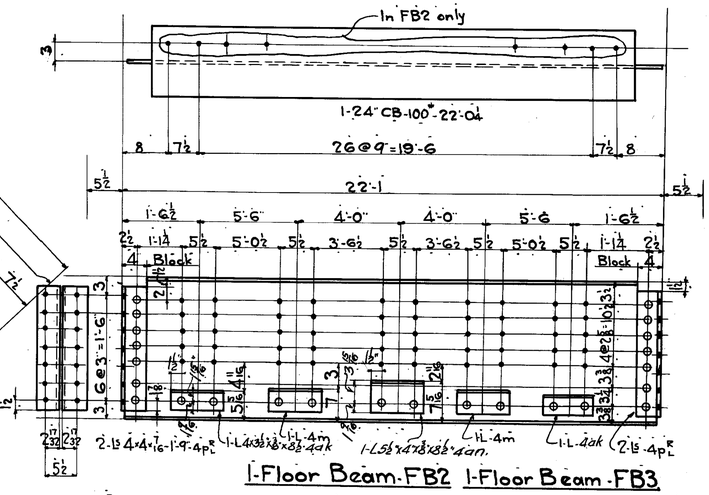

1-Floor Beam-FB2 1-Floor Beam-FB3

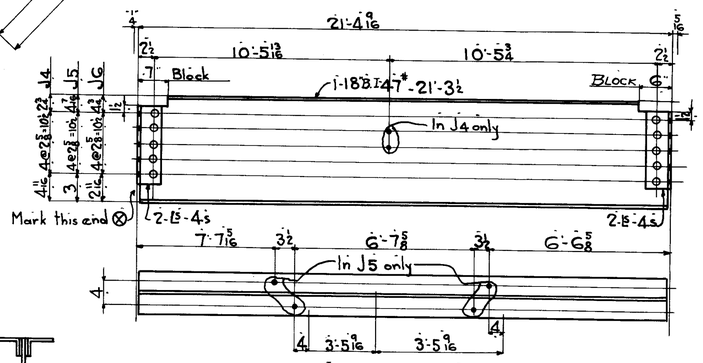

4-Stringers-J4
2- " " -J6
2- " " -J5R-as shown
2- " " -J5L-opp hand

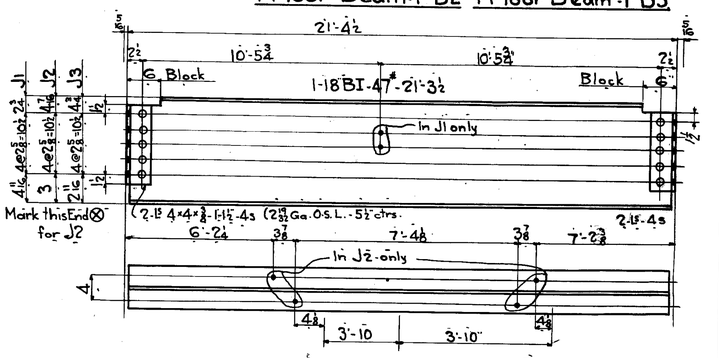

10-Stringers-J1
5- " " -J3
5- " " -J2R-as shown
5- " " -J2L-opp hand

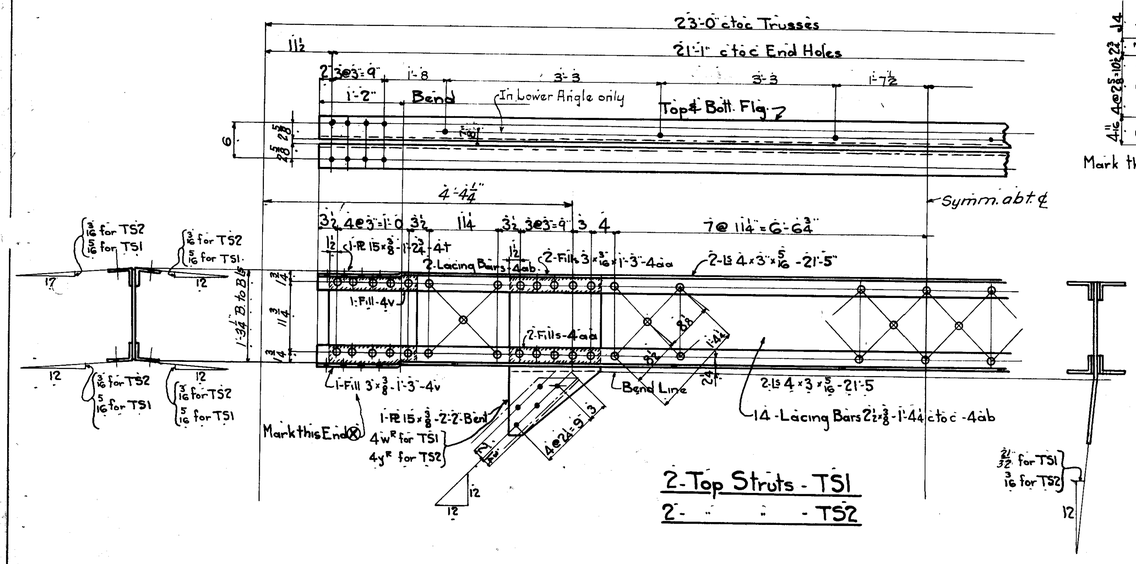

2-Top Struts-TS1
2- " " -TS2

RIVETS, 7/8"ϕ
OPEN HOLES, 15/16"ϕ
PAINT, See Spec.

RICHFORD-SUTTON BHF 0814(1)
REFERENCE PLANS
FOR INFORMATIONAL PURPOSES ONLY
SHEET 11 OF 49

PITTSBURGH-DES MOINES STEEL CO.
PITTSBURGH, PA. DES MOINES, IA.
150'0" THRU TRUSS SPAN
INTERNATIONAL BRIDGE BETWEEN
SUTTON PQ CANADA & EAST RICHFORD VT
MADE M.W.W. SHEET No. 4
TRACED H.E.J.
CHECKED W.H.H. 9/26/89 CONTRACT No. E1118
REVISED

F.R.P.20B.

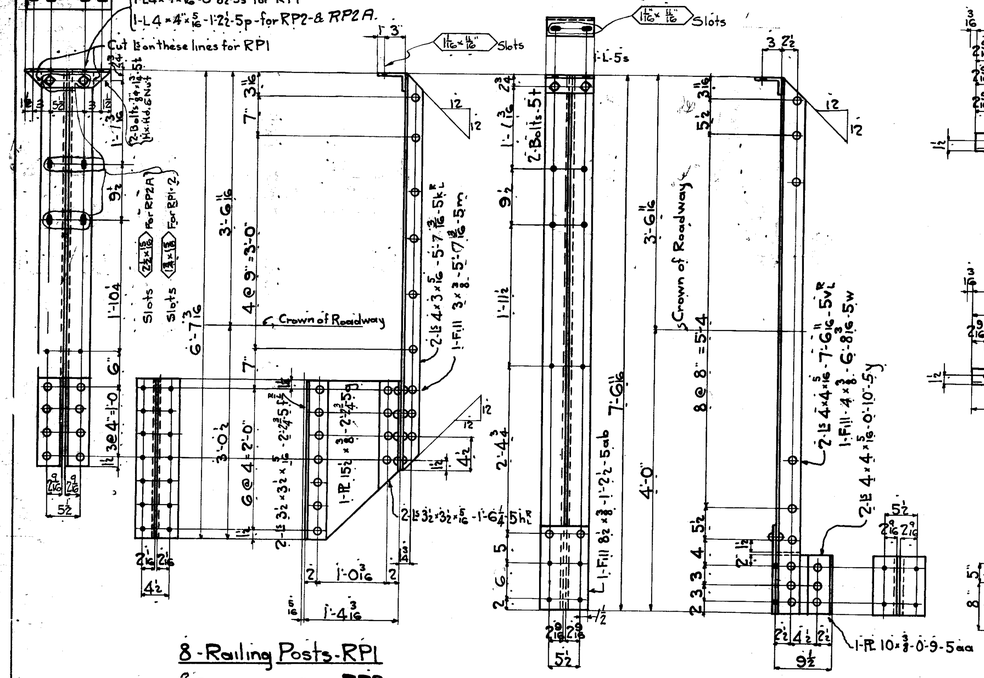

8-Railing Posts-RP1
2- " " -RP2
2- " " -RP2A

14 Railing Posts-RP3

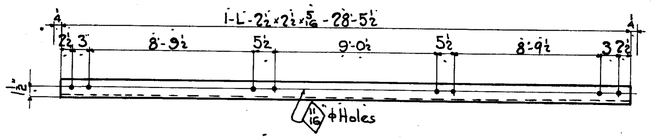

2-Hand Rails-HR5

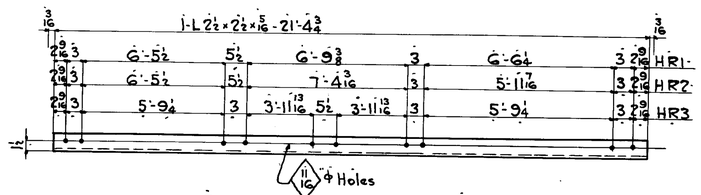

2-Hand Rails-HR1R as shown
2- " " -HR2R " "
2- " " -HR3

2-Hand Rails-HR1L-opp hand
2- " " -HR2L " "

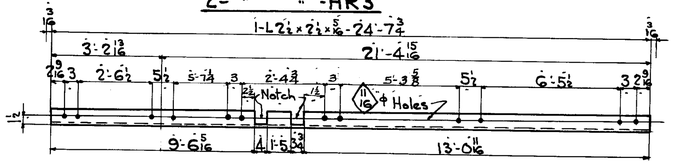

1-Hand Rail-HR4R-as shown
1-Hand Rail-HR4L-opp hand

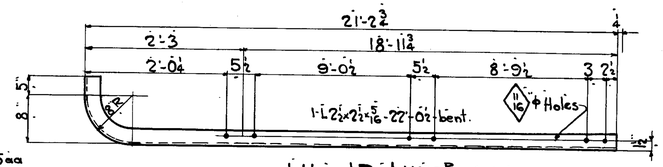

1-Hand Rail-HR6R-as shown
1- " " -HR6L-opp hand

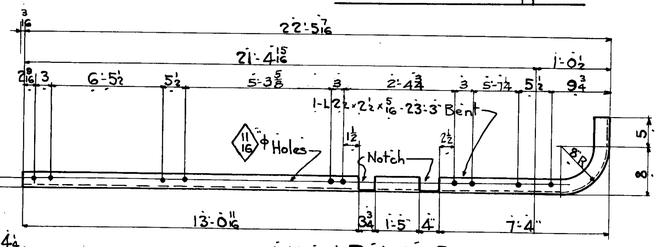

1-Hand Rail-HR7R-as shown
1-Hand Rail-HR7L-opp hand

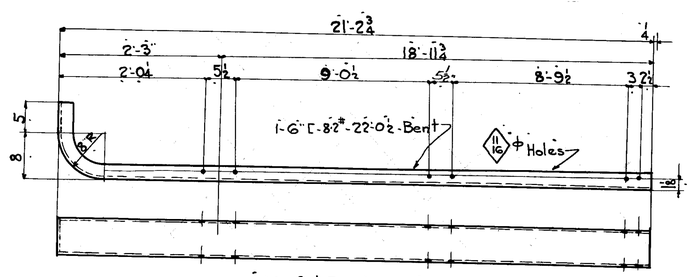

~~2-Hand Rail-HR13~~

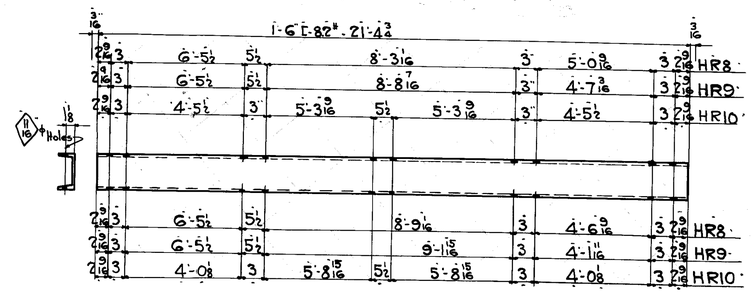

~~2-Hand Rails-HR8R as shown~~ ~~2-Hand Rails-HR8L-opp hand~~
~~2 " " -HR9R " "~~ ~~2 " " -HR9L " "~~
~~2 " " -HR10R~~

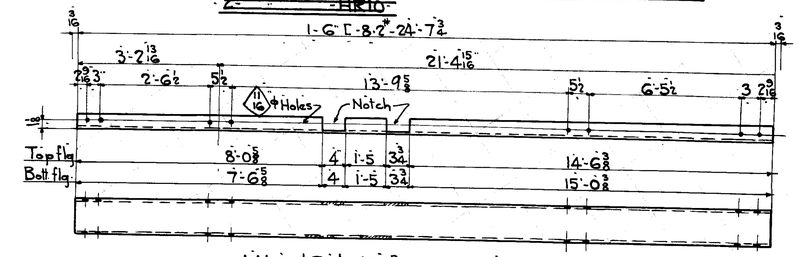

~~1-Hand Rail-HR11R as shown~~ ~~1-Hand Rail-HR11L-opp hand~~

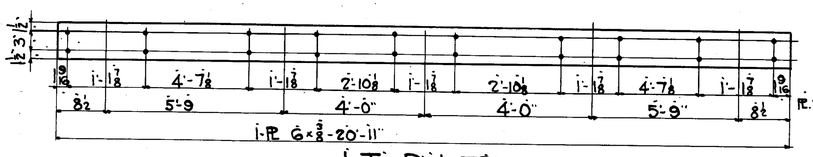

1-Tie Plate-TP1

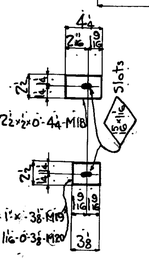

40-Plates-M18
30- " -M19
10- " -M20

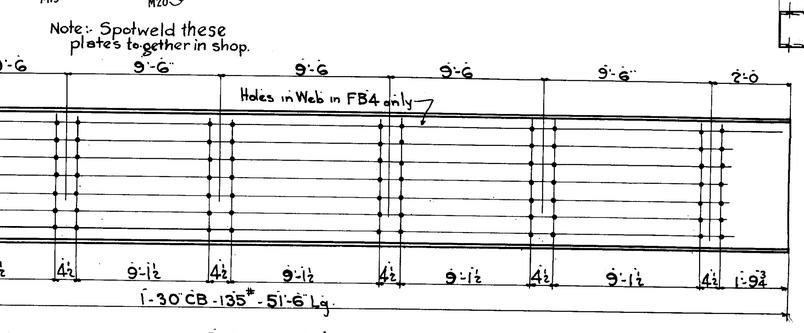

2-Beams-FB4
3- " -FB5

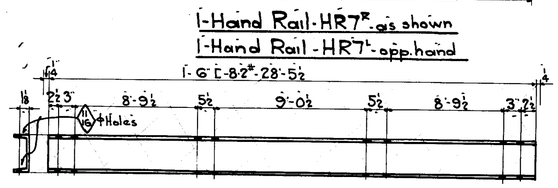

~~2-Hand Rail-HR12~~

Note:- Spotweld these plates together in shop.

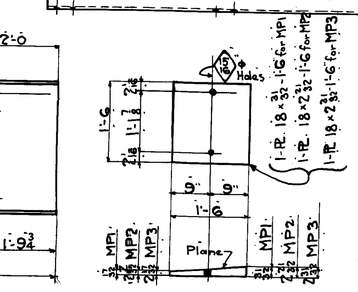

4-Masonry Rs-MP1
4- " " -MP2
2- " " -MP3

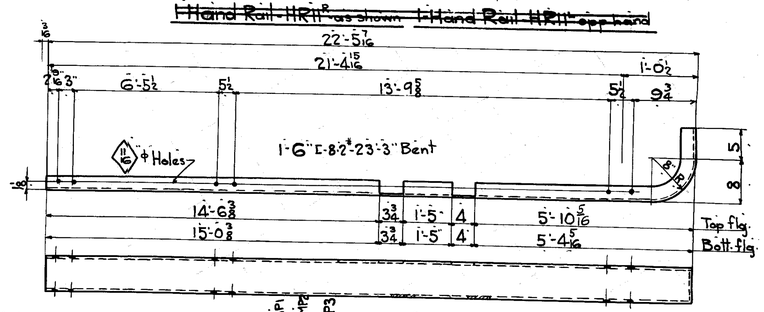

~~1-Hand Rail-HR14R as shown~~
~~1 " " -HR14L-opp hand~~

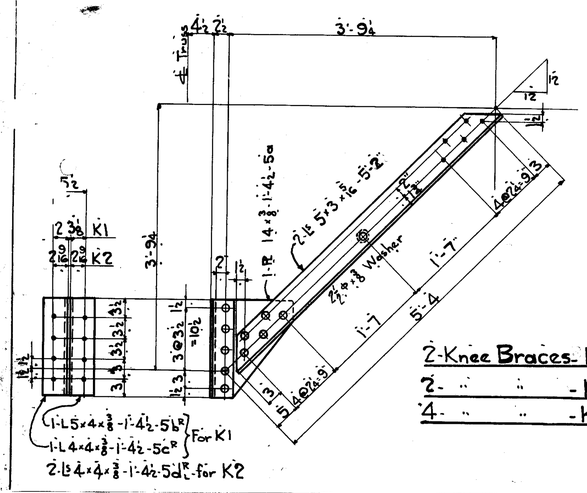

2-Knee Braces-K1R as shown
2- " " -K1L opp hand
4- " " -K2

RIVETS, 7/8" ϕ
OPEN HOLES, 15/16" unless noted
PAINT, See Spec.

PITTSBURGH-DES MOINES STEEL CO.
PITTSBURGH, PA. DES MOINES, IA.
150'-0" TRUSS SPAN
INTERNATIONAL BRIDGE BETW. SUTTON PQ. CANADA & EAST RICHFORD VT.
MADE M.W.W.
TRACED H.E.J.
CHECKED 11/16/67
REVISED
SHEET NO. 5
CONTRACT NO. EHM

RICHFORD-SUTTON BHF 0814(1)
REFERENCE PLANS
FOR INFORMATIONAL PURPOSES ONLY
SHEET 12 OF 49

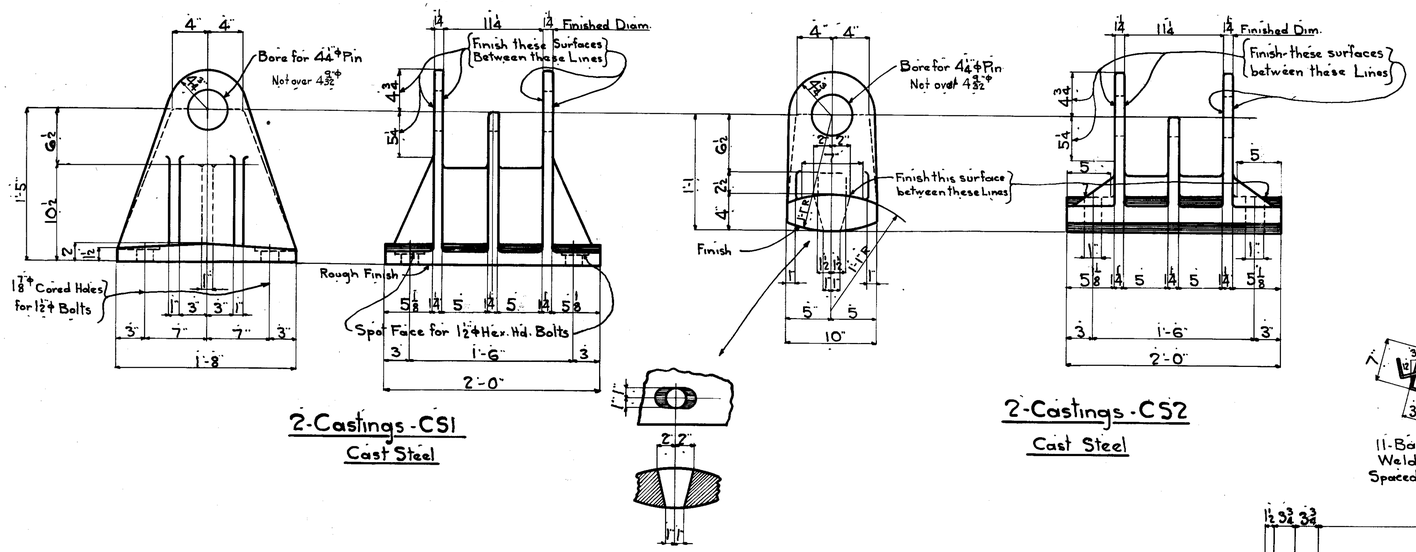

2-Castings-CS1
Cast Steel

2-Castings-CS2
Cast Steel

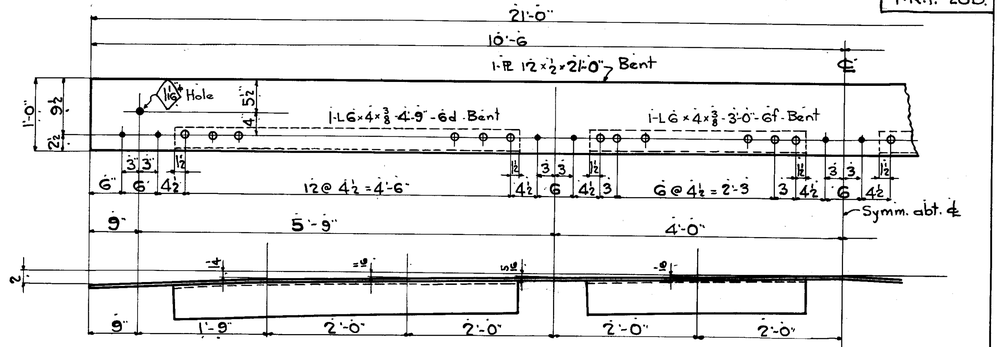

1-Exp. Plate-M8

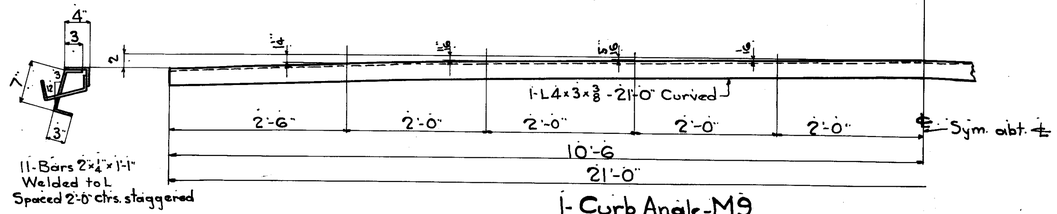

1-Curb Angle-M9

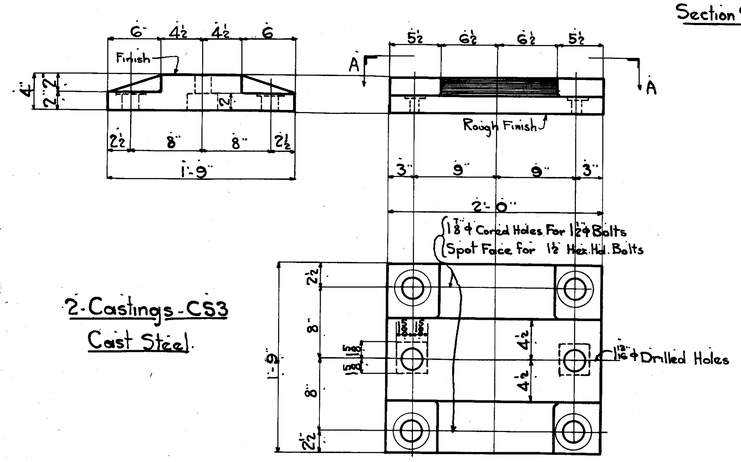

2-Castings-CS3
Cast Steel

View A-A

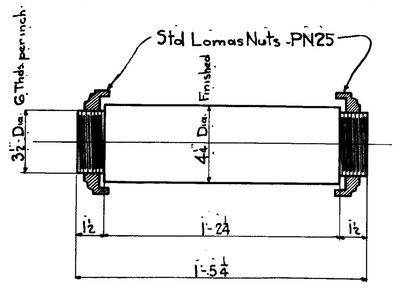

4-Pins-M4

1-Std. Driving Nut } For 4 4/4" Pin
1-Std. Pilot Nut

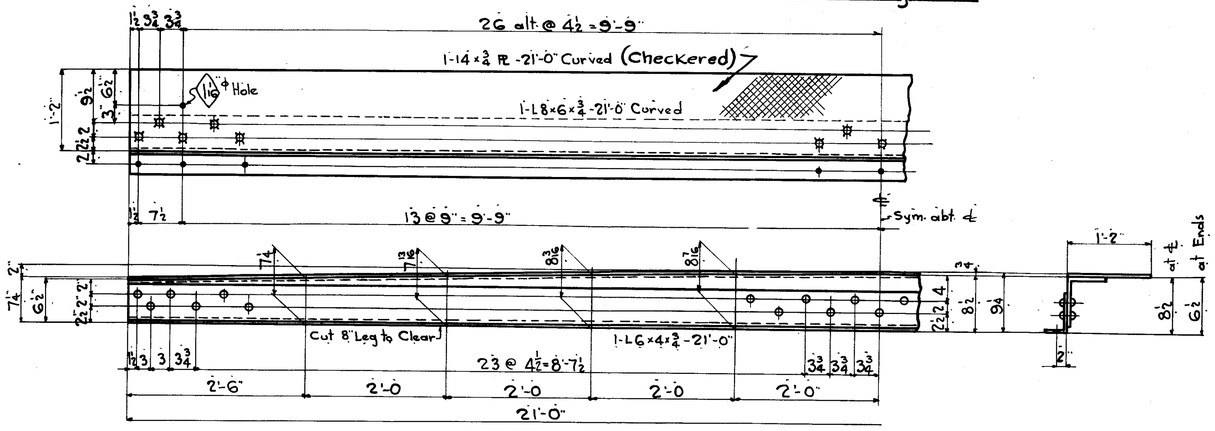

1-Exp. Dam-M10

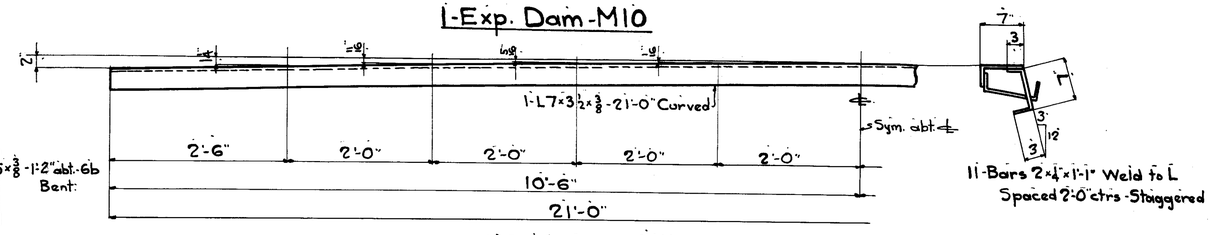

1-Curb Angle-M11

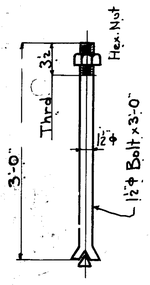

16-Anchor Bolts-M1

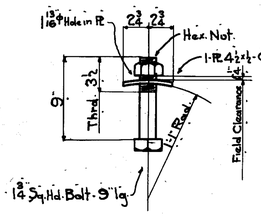

4-Bolts-M2

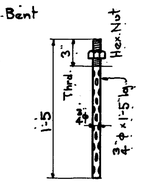

20-Swedge Bolts-M3
For Beam Span

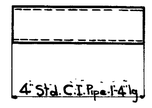

6-Drain Pipes-M5

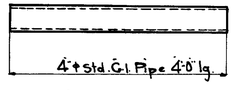

14-Drain Pipe-M6

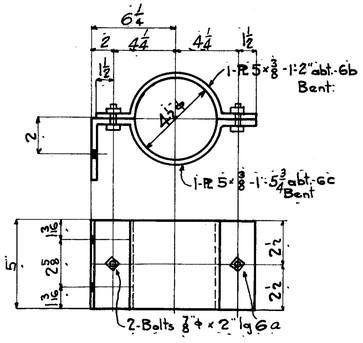

14-Drain Supports-M7

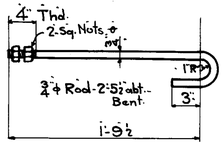

84-Bolts-M12

RIVETS, 7/8" ϕ
OPEN HOLES, 15/16" ϕ unless noted
PAINT, See Spec.
Machine Finish surfaces to be coated with white lead & Tallow as per Spec.

PITTSBURGH-DES MOINES STEEL CO.
PITTSBURGH, PA. DES MOINES, IA.
150'-0" THRU TRUSS SPAN.
INTERNATIONAL BRIDGE BET.
SUTTON P.Q. CANADA & EAST RICHFORD V.T.

MADE MWW	SHEET No. 6
TRACED HEJ	
CHECKED WH 6/19/49	CONTRACT No. E1118
REVISED	

RICHFORD-SUTTON BHF 0814(1)
REFERENCE PLANS
FOR INFORMATIONAL PURPOSES ONLY
SHEET 13 OF 49

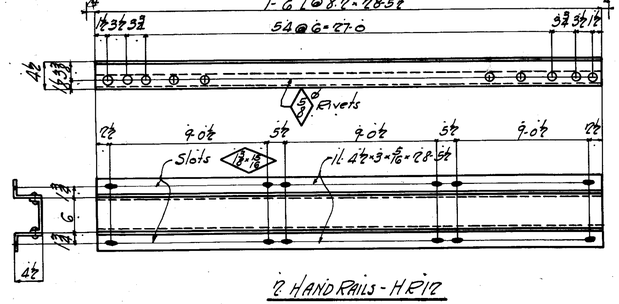

2 HAND RAILS - HR12

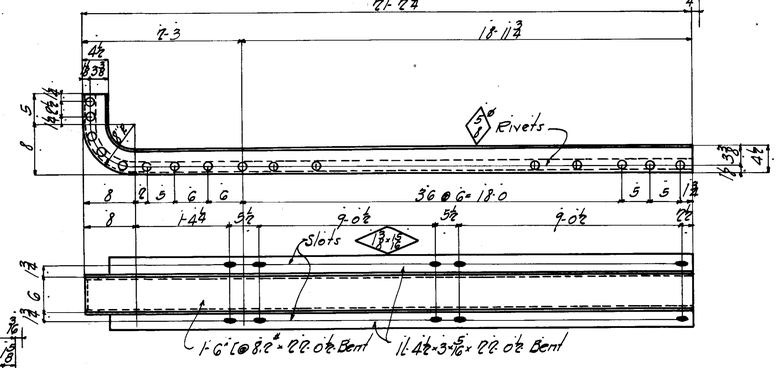

2 HAND RAILS - HR13

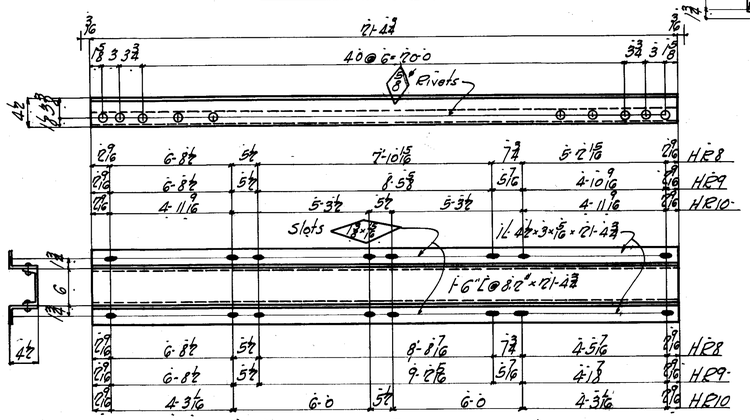

2 HAND RAILS - HR8R AS SHOWN.
2 do - HR9R " "
2 do - HR10

2 HAND RAILS - HR8L OPP HAND
2 do HR9L " "

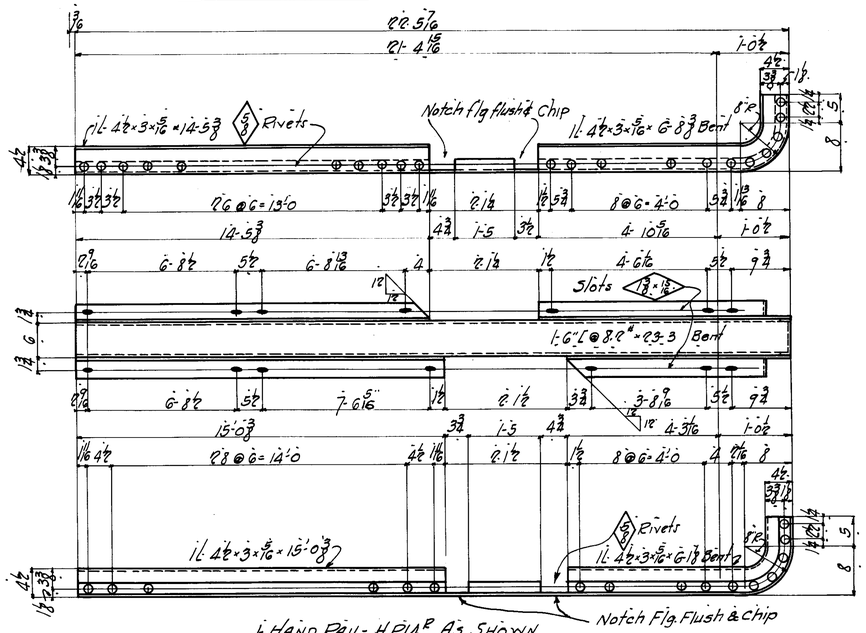

1 HAND RAIL - HR14R AS SHOWN
1 do HR14L OPP HAND.

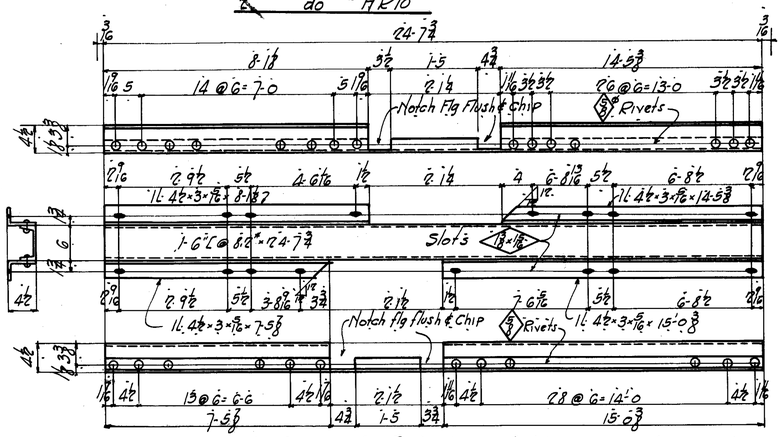

1 HAND RAIL - HR11R AS SHOWN
1 HAND RAIL - HR11L OPP HAND

RIVETS, ¾ϕ
OPEN HOLES, As noted.
PAINT, See Spec.

RICHFORD-SUTTON BHF 0814(1)
REFERENCE PLANS
FOR INFORMATIONAL PURPOSES ONLY
SHEET 14 OF 49

PITTSBURGH-DES MOINES STEEL CO.
PITTSBURGH, PA. DES MOINES, IA.
150'-0 TRUSS SPAN
INTERNATIONAL BRIDGE BETWEEN
SUTTON P.Q. CANADA & EAST RICHFORD VT

MADE M.W.W.	SHEET No. 7
TRACED W.	
CHECKED W.H.	CONTRACT No. E1118
REVISED	

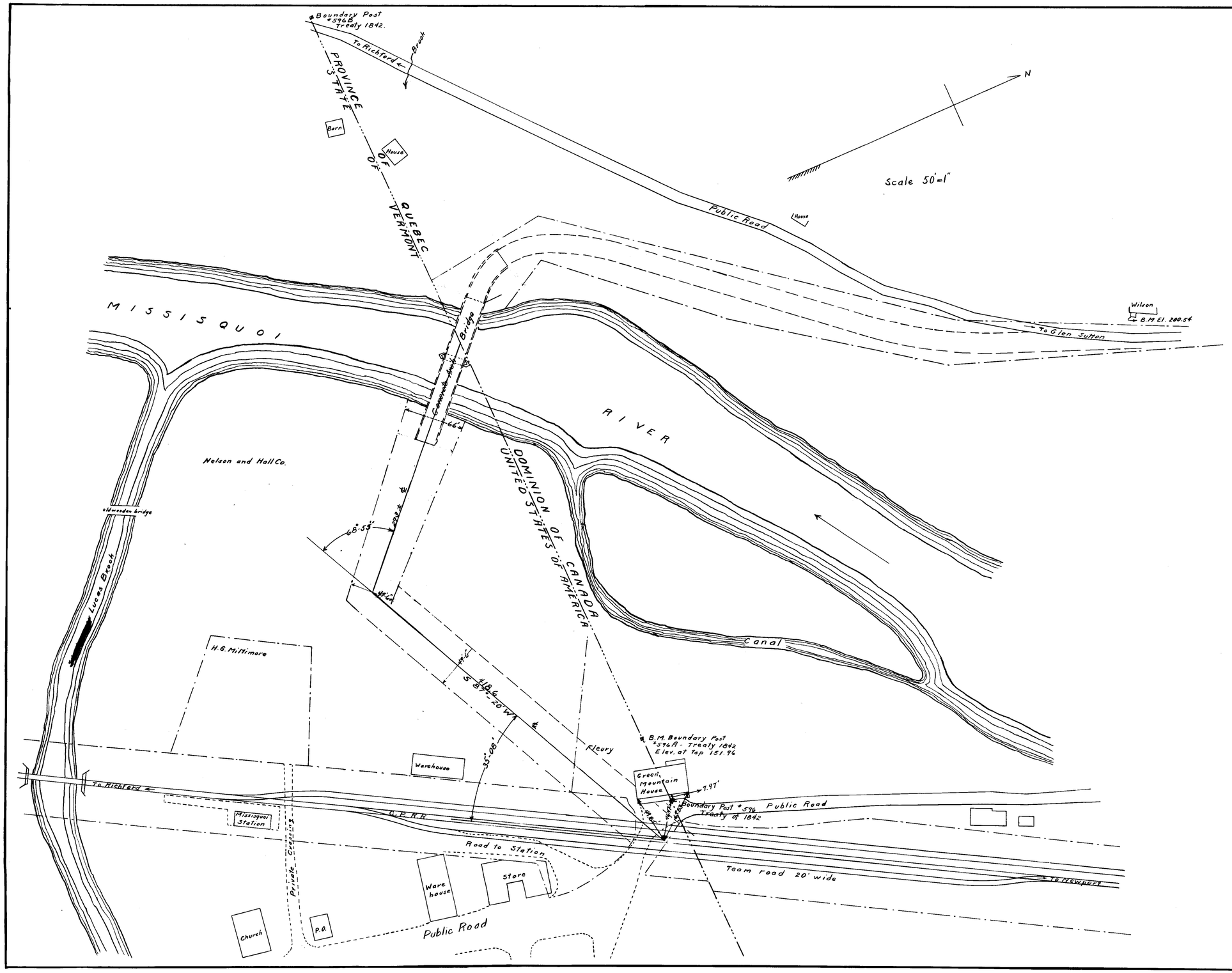

PLAN SHOWING

PROPOSED HIGHWAY

between

RAILROAD CROSSING AT E. RICHFORD

and

INTERNATIONAL LINE

WHERE IT CROSSES THE SUTTON-RICHFORD BRIDGE

APPROVED SEPT. 2 1920

H. M. McIntosh

STATE ENGINEER, VERMONT, U.S.A.

RICHFORD-SUTTON BHF 0814(1)
REFERENCE PLANS
FOR INFORMATIONAL PURPOSES ONLY
SHEET 15 OF 49

Traced by W.W.W. Series No. R 16 Filed

PLAN AND PROFILE
SHOWING LOCATION OF PROPOSED INTERNATIONAL BRIDGE BETWEEN SUTTON, P.Q. CANADA AND EAST RICHFORD, VT., U.S.A. AND OF CONNECTING HIGHWAYS.

HORIZONTAL SCALE 1" = 50'
VERTICAL SCALE 1" = 10'

APPROVED 1917.

STATE ENGINEER

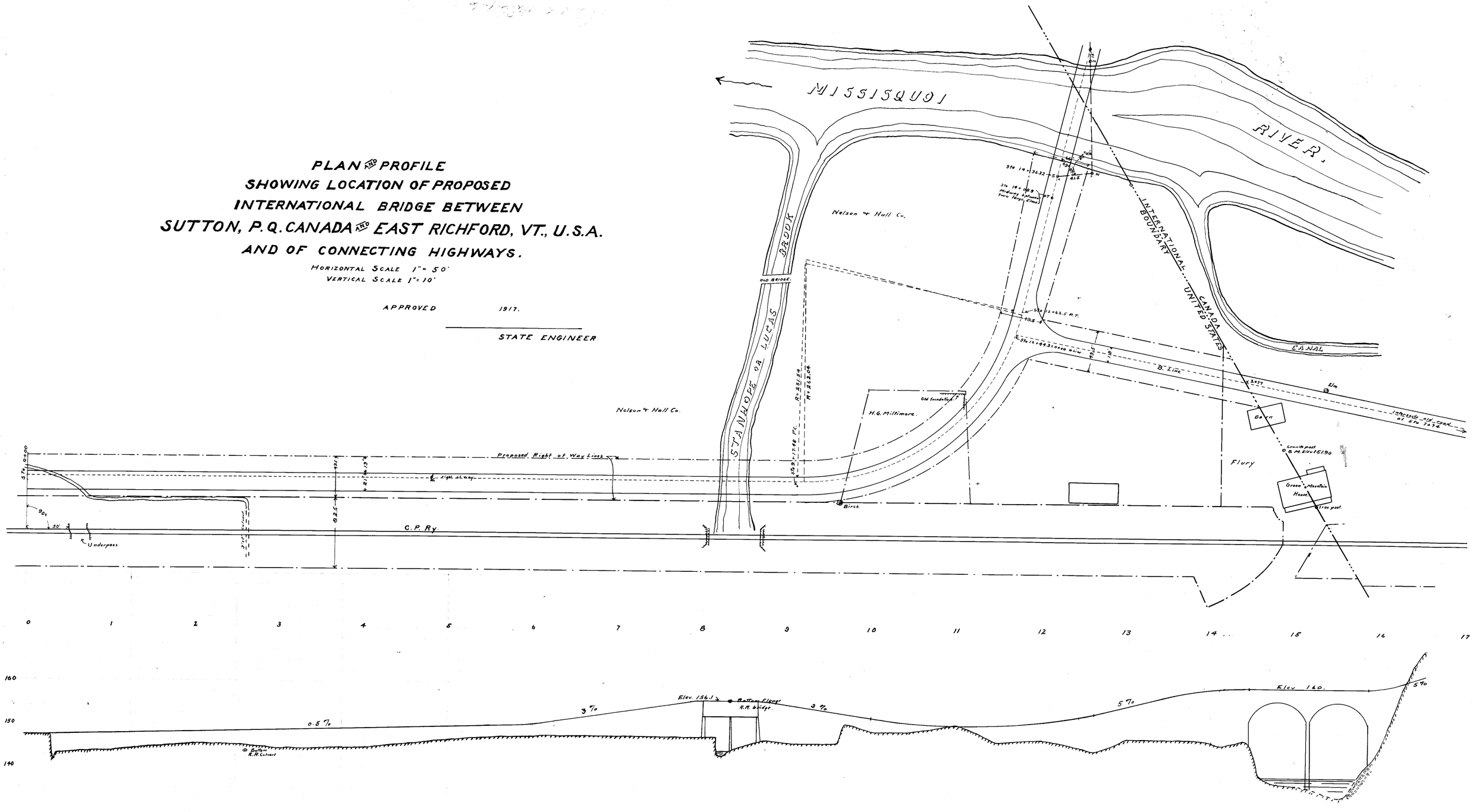

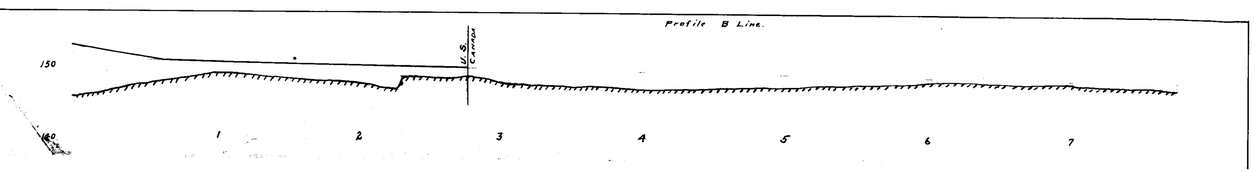

RICHFORD-SUTTON BHF 0814(1)
REFERENCE PLANS
FOR INFORMATIONAL PURPOSES ONLY
SHEET 16 OF 49

Made by Geo. A. Reed
Checked by
Traced by G.A.R.
Series J No. 1 Filed.

R 16

TYPICAL SECTIONS

GRAVEL SURFACE COURSE

ITEM 20

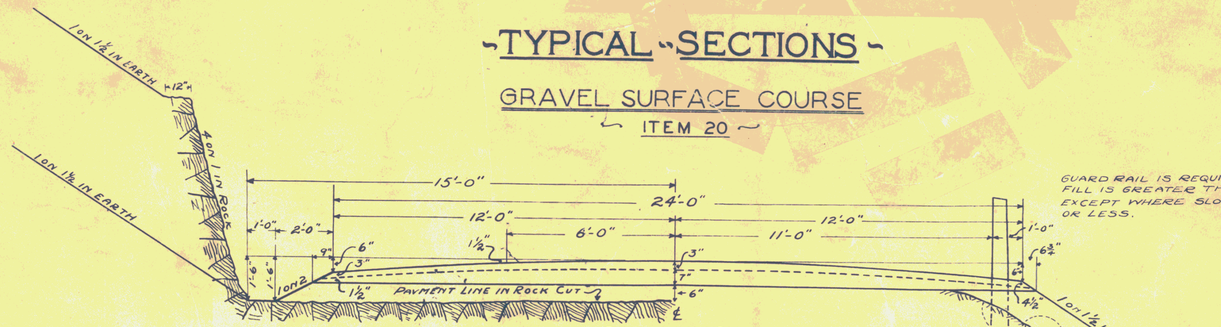

Guard rail is required where fill is greater than 4'-0" except where slope is 1 on 4 or less.

Areas

Gravel in 3" Surface Course	6.11 sq. ft.
" " 7" Bottom Course	10.66 sq. ft.

SECTION No. G-1

REGULAR SECTION WITHOUT BASE

When embankments are to be made on a hillside the slope of the original ground on which the embankments are to be placed shall be plowed deeply before the filling is commenced.
Pamphlet B – Item 10 – Paragraph 10.3

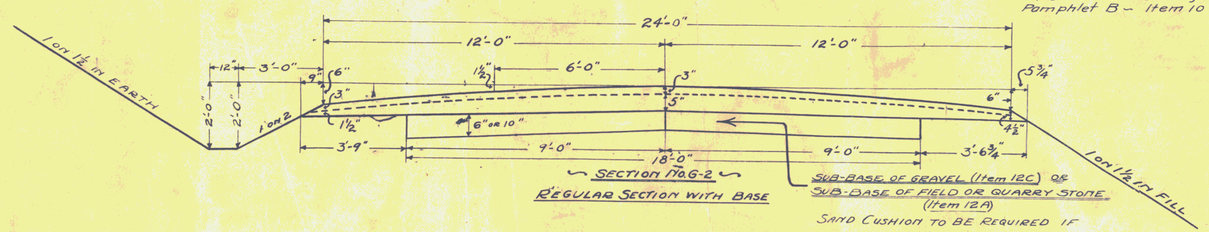

Areas

Gravel in 3" Surface Course	6.11 sq. ft.
" " 5" Bottom Course	8.66 sq. ft.
6" Sub-Base	9.00 sq. ft.
10" Sub-Base	15.00 sq. ft.

SECTION No. G-2

REGULAR SECTION WITH BASE

Sub-Base of Gravel (Item 12C) or Sub-Base of Field or Quarry Stone (Item 12A)

Sand Cushion to be required if ordered by the Engineer

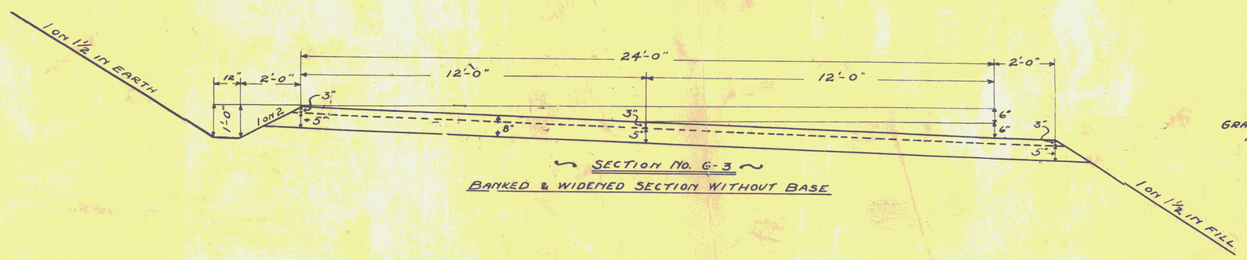

Areas

Gravel in 3" Surface Course	6.61 sq. ft.
" " Bottom Course	11.33 sq. ft.

SECTION No. G-3

BANKED & WIDENED SECTION WITHOUT BASE

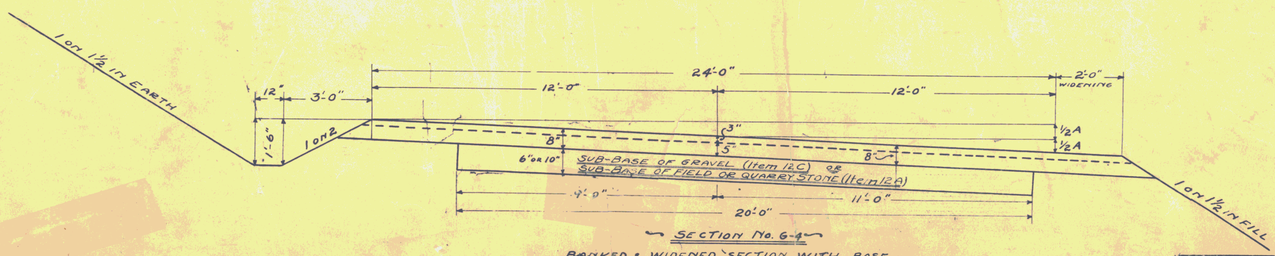

Areas

Gravel in 3" Surface Course	6.61 sq. ft.
" " Bottom Course	11.33 sq. ft.
6" Sub-Base	10.00 sq. ft.
10" Sub-Base	16.66 sq. ft.

SECTION No. G-4

BANKED & WIDENED SECTION WITH BASE

Value of "A" in Banking

12" for Curves	4°-00' to 10°-00'	
16" " "	10°-01' " 15°-00'	
18 " "	15°-01' and over	

Banking and Widening Curves

Begin to bank and widen curves 100' before reaching P.C. Arrive at full bank and full widening at P.C. and carry full bank and full widening to P.T., arriving at normal section 100' beyond P.T.

Surveyed by		1927
Designed by	H.E. SARGENT	
Drawn by	W.B. McALLISTER	MAY – 1927
Traced by	E.G. NORTON	MARCH 23, 1928
Checked by	K.M. [illegible]	
Series	No.	Field
	Sheet of	Sheets

PROJECT	Richford
NUMBER	FR. 20B
LENGTH	MI.
TYPE	150' Steel Thru Truss, I on Approach
CONTRACTOR	
YEAR	1929
LOCATION	International bridge. Vt 105-A, B3 over Missisquoi River

RICHFORD-SUTTON BHF 0814(1)
REFERENCE PLANS
FOR INFORMATIONAL PURPOSES ONLY
SHEET 17 OF 49

STATE OF VERMONT — DEPARTMENT OF HIGHWAYS

RICHFORD — F.R.P. ~~F.A.P.~~ NO. 20 B

Form Eng. 3A — Summary Sheet No. 1 of 1 — Aug 21, 1928

APPROXIMATE SUMMARY OF QUANTITIES

QUANTITIES	UNIT	ITEMS	ITEM NUMBER
	Cu. Yds.	Common Excavation	10
	Cu. Yds.	Solid Rock Excavation	10
967	Cu. Yds.	Borrow	11
2190	Cu. Yds.	Common Excavation including Borrow	10-11
	Cu. Yds.	Sub-base of Field or Quarry Stone	12A
	Cu. Yds.	Sub-base of Crushed Rock or Slag	12B
	Cu. Yds.	Sub-base of Gravel	12C
	Cu. Yds.	Telford Base Course	12D
	Cu. Yds.	Sub-base of Sand	12E
1618			
1,150	Cu. Yds.	Structure Excavation	15
	Cu. Yds.	Broken Stone Base Course	16
35			
23	Cu. Yds.	Gravel Surface Course	20A
	Cu. Yds.	Gravel Surface Course (Crushed)	20B
	Cu. Yds.	Gravel Shoulders	21
	Cu. Yds.	Bituminous Macadam Surface Course	22A
	Gals.	Oil Asphalt	22B
	Gals.	Refined Tar	22C
	Cu. Yds.	One-Course Cement Concrete Pavement Type A	23 A
	Cu. Yds.	One Course Cement Concrete Pavement Type B	23B
	Sq. Yds.	Bituminous Concrete Surface Course	
	Sq. Yds.	Single Bituminous Surface Treatment	25
	Sq. Yds.	Double Bituminous Surface Treatment	26
	Sq. Yds.	Natural Rock Asphalt Surface	27
266.1			
198	Cu. Yds.	Concrete Class ~~B (1-2-4)~~ A (1-2-4) (for abutments and piers)	34AA
1354/33	Cu. Yds.	Concrete Class A (1-2-4) (for floor and barrier)	34A
3339.40	Cu. Yds.	Concrete Class B (1-2½-3) (for Abut. & Piers)	34B
30,910	Lbs.	Reinforcing Steel	36
33,150	Lbs.	Structural Steel	36A
1	Lump		
	Sum	Steel Superstructure (207,000 lbs.)	36B
	Sq. Yds.	Waterproofing Membrane	37
	Cu. Yds.	Cement Rubble Masonry	42
	Cu. Yds.	Dry Rubble Masonry	44
	Sq. Yds.	Repointing Masonry	45
	Lin. Ft.	6" Vitrified Clay Pipe	50B
	Lin. Ft.	8" Vitrified Clay Pipe	50C
	Lin. Ft.	10" Vitrified Clay Pipe	50D
	Lin. Ft.	12" Vitrified Clay Pipe	50E

APPROXIMATE SUMMARY OF QUANTITIES

QUANTITIES	UNIT	ITEMS	ITEM NUMBER
	Lin. Ft.	12" Pipe	
	Lin. Ft.	15" Pipe	
	Lin. Ft.	16" Pipe	
	Lin. Ft.	18" Pipe	
	Lin. Ft.	21" Pipe	
	Lin. Ft.	30" Pipe	
	Lin. Ft.	36" Pipe	
	Lin. Ft.	12" Pipe	
	Lin. Ft.	15" Pipe	
	Lin. Ft.	16" Pipe	
	Lin. Ft.	18" Pipe	
	Lin. Ft.	24" Pipe	
	Lin. Ft.	30" Pipe	
	Lin. Ft.	36" Pipe	
	Lin. Ft.	Relaying Pipe Culverts	51
	Lump		
	Sum	Temporary Bridge	55
	Lin. Ft.	Timber Piling	56
	M. B. M.	Timber Grillage	57
	Cu. Yds.	Stone Fill	60
	Cu. Yds.	Plain Rip Rap	61
	Cu. Yds.	Rip Rap for Bank Protection	62
	Lin. Ft.	Tile Underdrain	65
88	Lin. Ft.	Wood Guard Rail	66
72	Lin. Ft.	Cable Guard Rail	67
	Cu. Yds.	Plain Rubble Paving	70A
	Cu. Yds.	Grouted Rubble Paving	70B
	Sq. Yds.	Plain Cement Concrete Gutter	72
	Sq. Yds.	Plain Cobble Gutter	74A
	Sq. Yds.	Grouted Cobble Gutter	74B
	Each	Leaching Basins	75
	Each	Catch Basins	76
	Each	Changing Elevations of Manholes and Catch Basins	77
	Each	Drop Inlet Grates	78

DETAILED SUMMARY OF QUANTITIES

STATE OF VERMONT — DEPARTMENT OF HIGHWAYS

F. A. P. NO. .....

Form Eng. 3A — Summary Sheet No. 192

Type of Road .....

STATIONS FROM	STATIONS TO	EQUATIONS

Length of Project, 254.0 ft. = 0.048 Miles.

Total length of Bridge, 205.25 ft. = 0.038 Miles.

RICHFORD-SUTTON BHF 0814(1)
REFERENCE PLANS
FOR INFORMATIONAL PURPOSES ONLY
SHEET 18 OF 49

STATE OF VERMONT — DEPARTMENT OF HIGHWAYS

EAST RICHFORD — F.R.P. ~~F.A.P.~~ NO. 208

Form Eng. 1A — Earthwork Sheet No. 1 OF DEC 31 1928

PROFILE

Station	Elevation On Ground	Elevation On Vertical Curve	Correction for Vertical Curve	Dist.	Total Excavation Area	Total Excavation Cubic Yards	Balance Excavation Area	Balance Excavation Cubic Yards	Embankment Area	Embankment Cubic Yards
257+75	148.69	148.69	0.0							
258+00	148.69	148.74	+0.05							
+25	148.69	148.90	+0.21							
+50	148.69	149.18	+0.49							
+60	148.95	149.31	+0.36							
+75	149.35	149.56	+0.21							
+95	149.87	149.94	+0.07							
259+00	150.00	150.05	+0.05							
+16	150.42	150.43	+0.01							
+25	150.66	150.66	0.0							
+33	150.87	150.87								
+38	151.00	151.00								
+40					0	49.2				
+50	151.32	151.32			266					
				10		107.4				
+60	151.58	151.58			315					
				10		201.1				
+70	151.84	151.84			771					
				10		313.7				
+80	152.10	152.10			923					
				10		362.0				
+90	152.36	152.36	0.0		1032					
260+00	152.62	152.62	0.0	2		493.3				
+10	152.88	152.87	-0.01		300	66.6				
+22					0					
+25	153.27	153.23	-0.04							
+30	153.40	153.35	-0.05							
+35.4	153.54	153.48	-0.06							
+52.3	153.98	153.86	-0.12							
+60	154.18	154.03	-0.15							
+66	154.33	154.15	-0.18							
+85	154.83	154.55	-0.28							
+90	154.99	154.67	-0.32							
261+00	155.12	154.86	-0.26							
+21	155.40	155.25	-0.15							
+25	155.45	155.31	-0.14							
+27	155.48	155.35	-0.13							
+50	155.79	155.74	-0.05							
+51.5	155.81	155.76	-0.05							
+60	155.92	155.89	-0.03							
+80	156.19	156.19	-0.0							

Date JAN. 5, 1929 — 150' V.C. — 0.0% — +2.63% — 200' V.C. — +1.33%

Revised by PATTERSON

Checked by

Completed by

CARRY FORWARD COLUMN FOOTINGS 1593.3

STATE OF VERMONT — DEPARTMENT OF HIGHWAYS

Form Eng. 1A — F. A. P. NO. — Earthwork Sheet No. 192

PROFILE

Station	Elevation On Ground	Elevation On Vertical Curve	Correction for Vertical Curve	Dist.	Total Excavation Area	Total Excavation Cubic Yards	Balance Excavation Area	Balance Excavation Cubic Yards	Embankment Area	Embankment Cubic Yards
261+90	156.32	156.32	-0.0							
+91.7					472.3					
262+00	156.45									
				28.3		285.4				
+20	156.72				72.3					
				20		28.7				
+40	157.99				6.6					

100' V.C. — +1.33%

Date

Revised by

Checked by

Completed by

TOTAL FILL 1907
FACTOR 1.15 x 1907 = 2190 CU. YDS. BORROW.

CARRY FORWARD COLUMN FOOTINGS 1907.4

RICHFORD-SUTTON BHF 0814(1)
REFERENCE PLANS
FOR INFORMATIONAL PURPOSES ONLY
SHEET 19 OF 49

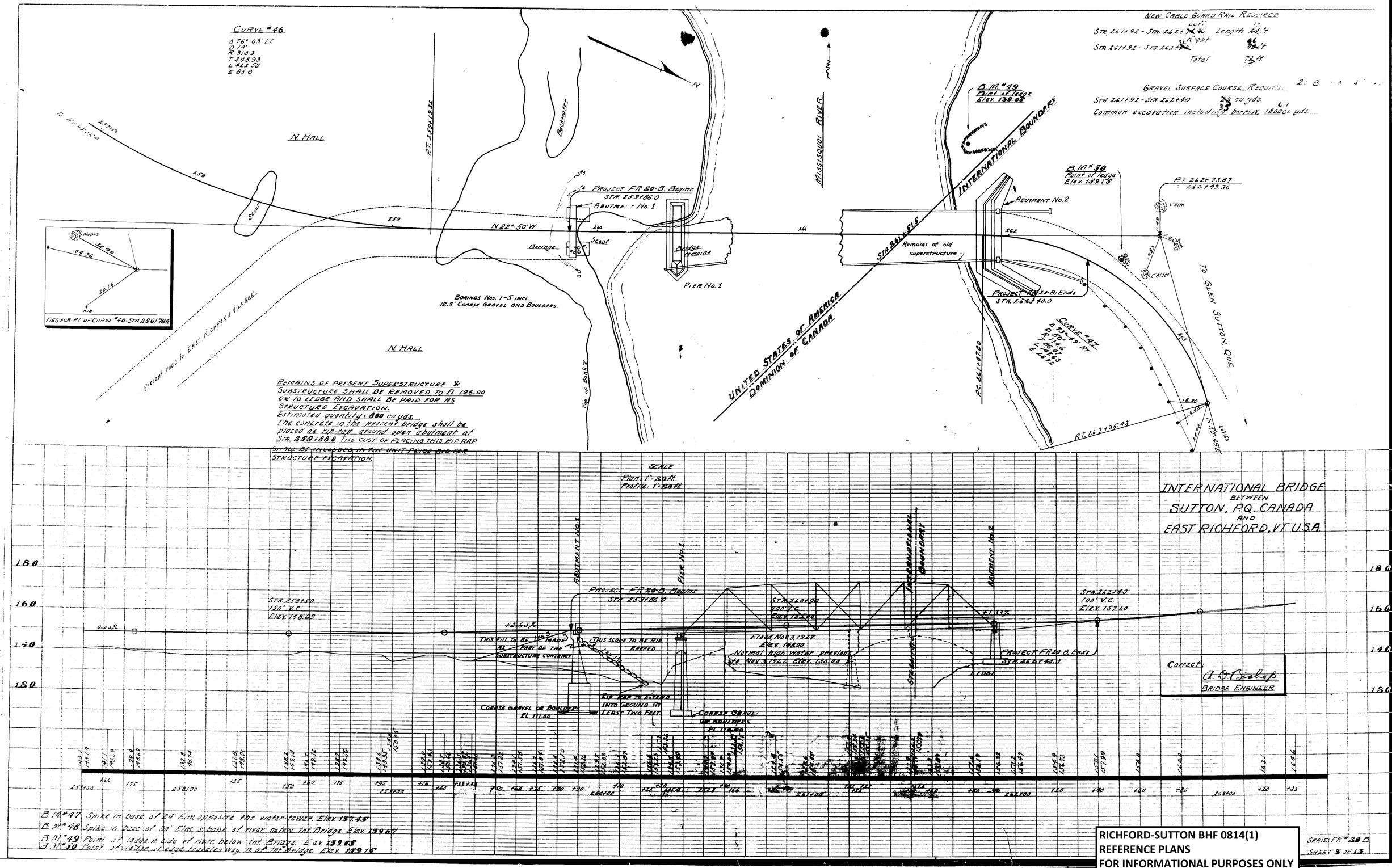

RICHFORD-SUTTON BHF 0814(1)
REFERENCE PLANS
FOR INFORMATIONAL PURPOSES ONLY
SHEET 20 OF 49

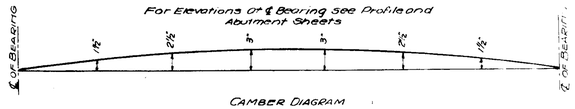

CAMBER DIAGRAM

TRUSS TO RETAIN CAMBER SHOWN AFTER APPLICATION OF DEAD LOAD

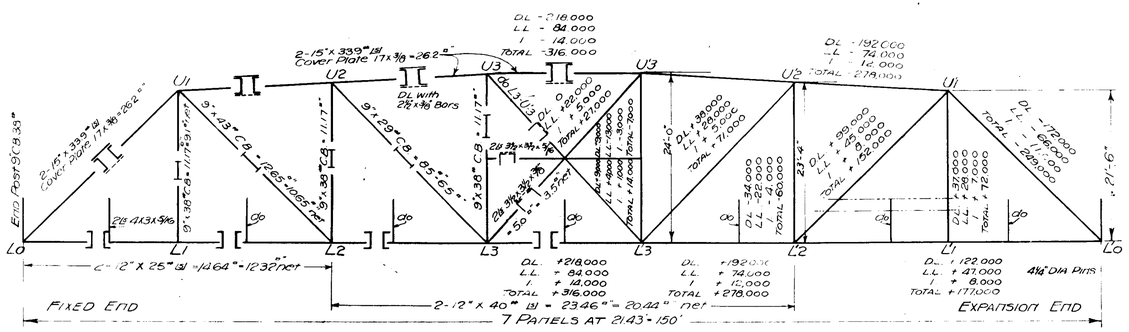

STRESS DIAGRAM
(Stresses in Kips)

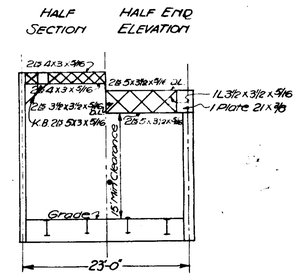

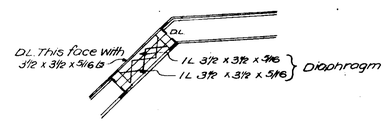

CROSS SECTION OF PORTAL BRACING

STRINGER MOMENT	
DL	516,600 in lbs
LL	963,200
I	314,800
TOTAL	1,814,400 in lbs

STRINGER REACTION	
DL	8000 lbs
LL	16,000
I	5,000
TOTAL	29,000 lbs

FLOOR BEAM MOMENT	
DL	2052000 in lbs
LL	2137000
I	534000
TOTAL	4723000 in lbs

FLOOR BEAM REACTION	
DL	30,000 lbs
LL	28,000
I	7,000
TOTAL	65,000 lbs

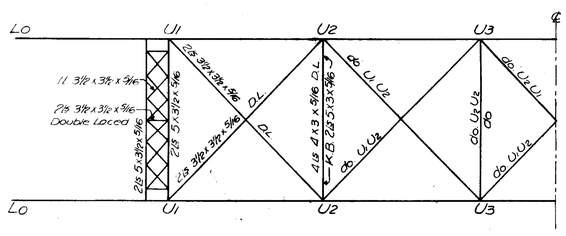

HALF PLAN UPPER LATERAL SYSTEM

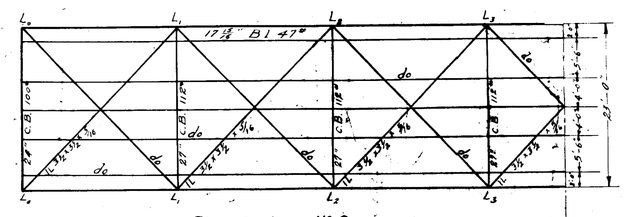

Floor system NO. 2
HALF PLAN - FLOOR AND LOWER LATERAL SYSTEM
To be used when floor is poured half width

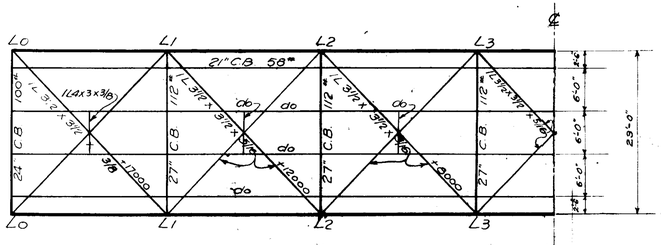

Floor system NO. 1
HALF PLAN FLOOR AND LOWER LATERAL SYSTEM
HAVING INTERSECTION OF LOWER LATERAL DIAGONALS FROM 4 x 3 x 3/8 L CONNECTED TO WEBS OF STRINGERS.

NOTES

FLOOR DESIGNED FOR

DEAD LOAD ~ 8" CONCRETE SLAB + 18" PAVING ALLOWANCE + WEIGHT OF STEEL
LIVE LOAD ~ ROADWAY ~ 2-15 TON TRUCKS 13'-0" C/C AXLES 6'-0" C/C WHEELS 85% OF LOAD ON REAR AXLES
IMPACT ~ STRINGERS 32% FLOOR BEAMS 23%

TRUSS DESIGNED FOR

DEAD LOAD ~ CONCRETE FLOOR AND PAVING 1300# + STEEL 600# = 1900# PER LIN. FT.
LIVE LOAD ~ 2 LANES ~ H-15 AASHO SPEC. 1926
IMPACT ~ $I = \frac{L+250}{10L+500}$ WHERE L = AGGREGATE LOADED LENGTH
GUSSET PLATE 7/16 AT L_0 3/8" ELSEWHERE.
RIVETS 7/8" DIA

REFERENCES

FOR THIS BRIDGE USE THE FOLLOWING STANDARD DETAILS AND TYPES SHOWN ON SHEET S-81. STANDARD DETAILS FIGS S-2 WHERE A=1'-5" B=2'-9" C=5'-0" D=7'-0" S-5, S-6, S-9 AT EXPANSION END. S-10 AT FIXED END, S-12, S-13, S-15, S-16 AND S-21 (SEE NOTES)

S-15 does not apply to Interpretational Bridge Richford, VT. F.R.P. 28B.

STEEL SUPERSTRUCTURE
150'-0" ct BEARING
20' ROADWAY
2 H-15

Correct
A. D. Bishop
BRIDGE ENGINEER

RICHFORD-SUTTON BHF 0814(1)
REFERENCE PLANS
FOR INFORMATIONAL PURPOSES ONLY
SHEET 21 OF 49

Use Floor System No. 2 for International Bridge Richford VT.

THIS SHEET USED FOR
International Bridge Richford, VT. F.R.P. 28B.

ESTIMATED QUANTITIES

STRUCTURAL STEEL	165,000 LBS
CONCRETE CLASS A (1-2-4)	91 CU YDS
REINFORCING BARS	13,800 LBS

Surveyed by
Designed by L. H. SHOEMAKER
Drawn by G.L.P.
Traced by G.L.P.
Checked by M. R. Woodruff 3/9/31
Series SB20 No. 250 Filed
Sheet of Sheets

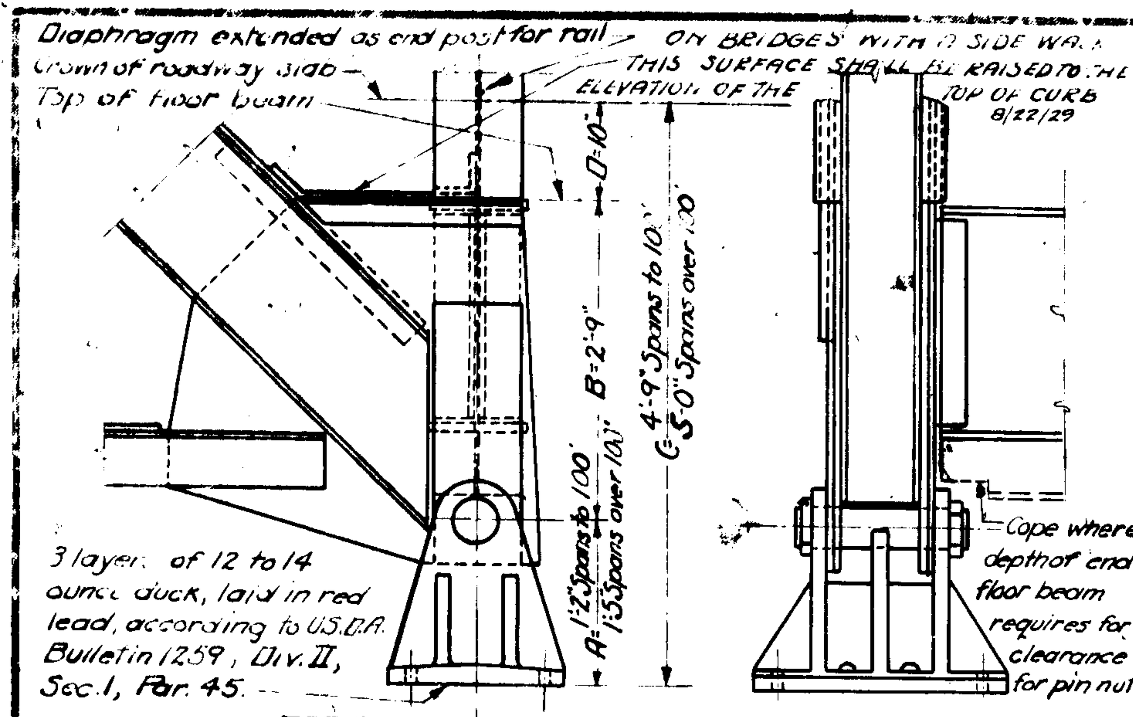

DETAIL AT SUPPORT
Fixed End Shown

STANDARD DETAIL S-1

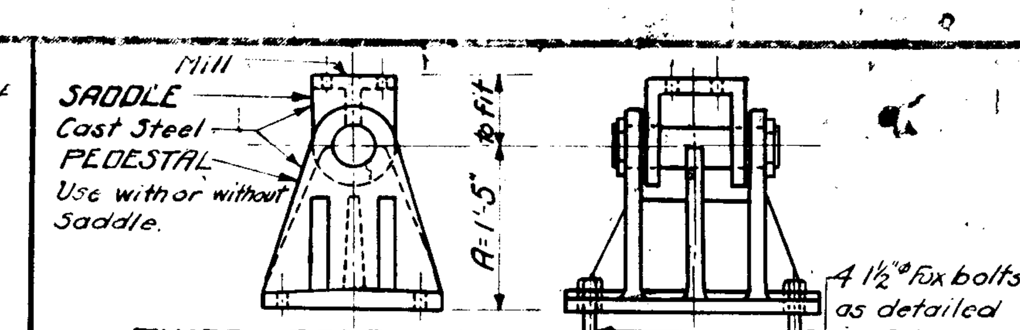

FIXED PEDESTAL
Use for Spans from 100 ft. up

STANDARD DETAIL S-5

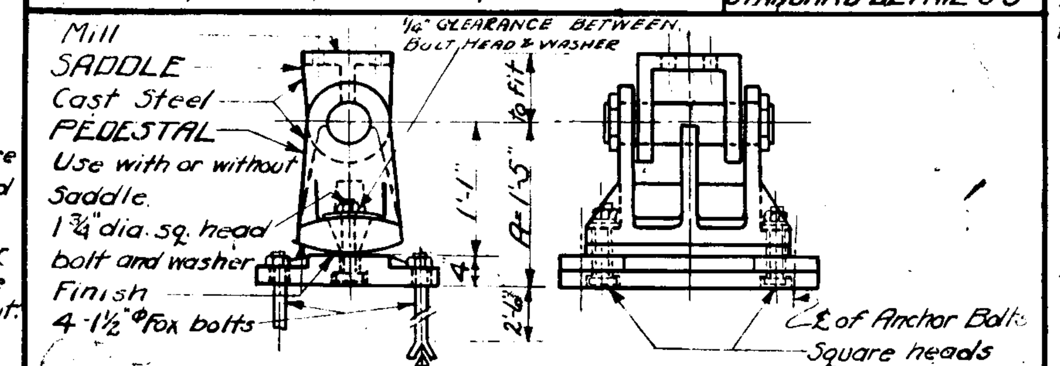

EXPANSION PEDESTAL
Use for Spans from 100 ft. to 200 ft.

STANDARD DETAIL S-6

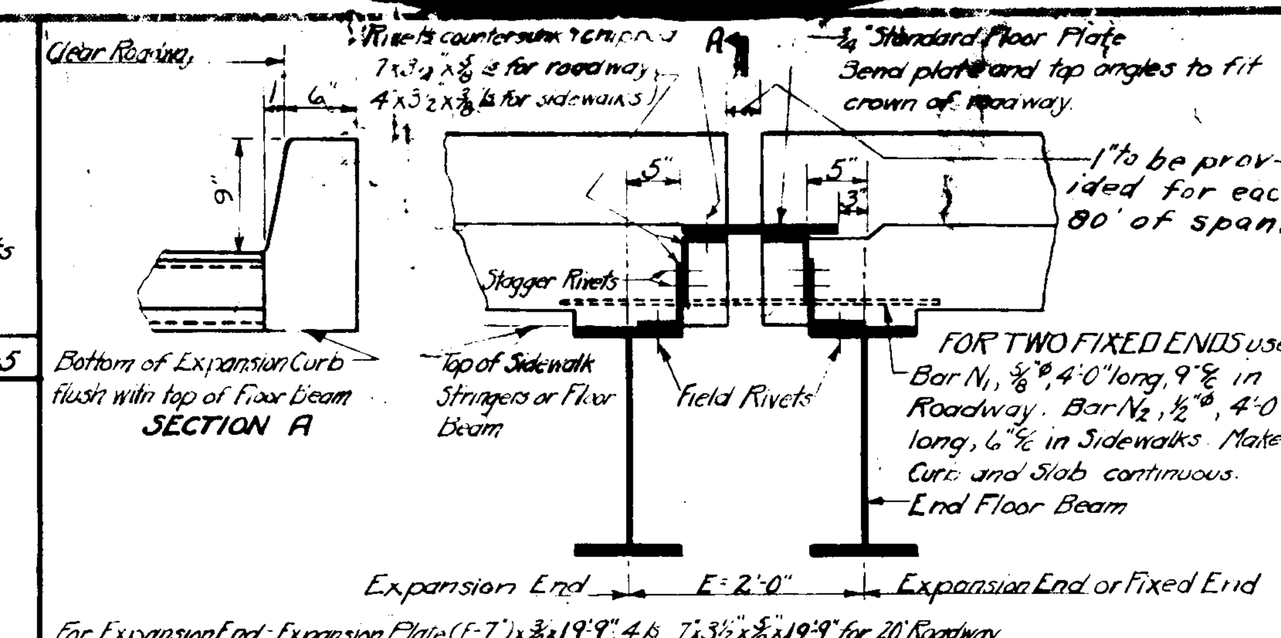

For Expansion End - Expansion Plate (E-7) x ¾ x 19'-9"; 4 ∠s 7x3½x⅝x19'-9" for 20' Roadway
Expansion Plate (E-7) x ¾ x 17'-9"; 4 ∠s 7x3½x⅝x17'-9" for 18' Roadway
Expansion Plate (E-7) x ⅜ x L_2; 4 ∠s 4x3½x⅜xL_1 for Sidewalks

ROADWAY EXPANSION JOINT BETWEEN SPANS
See Standard Detail S-18 for dimensions L_1 and L_2

STANDARD DETAIL S-11

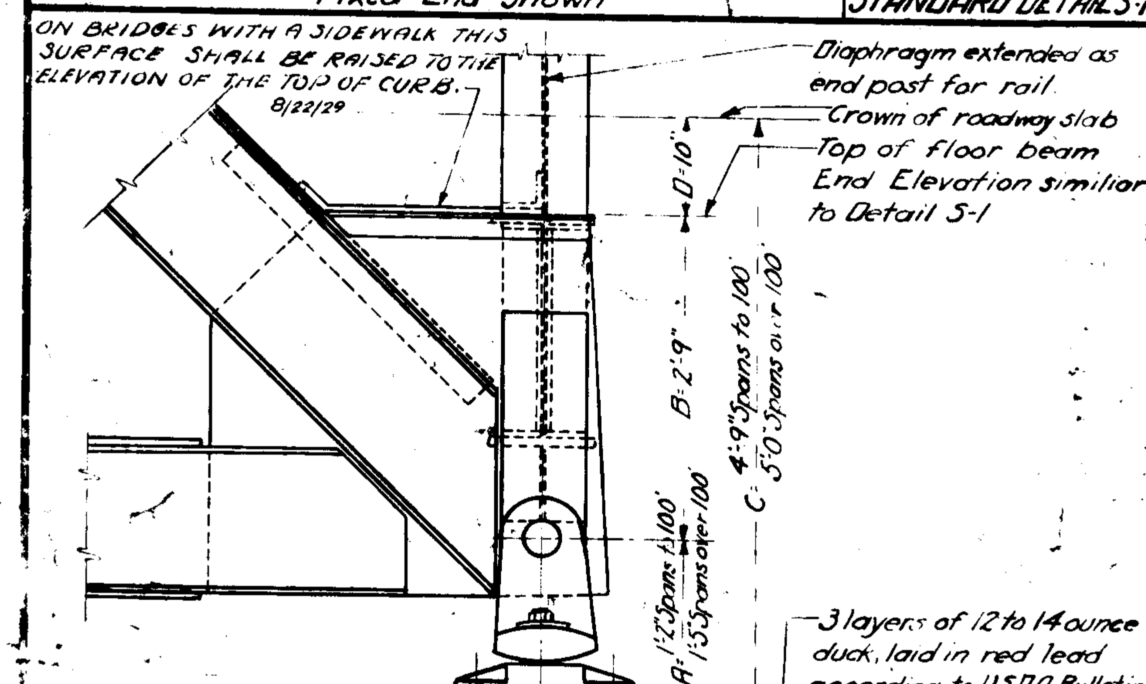

DETAIL AT SUPPORT
Expansion End Shown

STANDARD DETAIL S-2

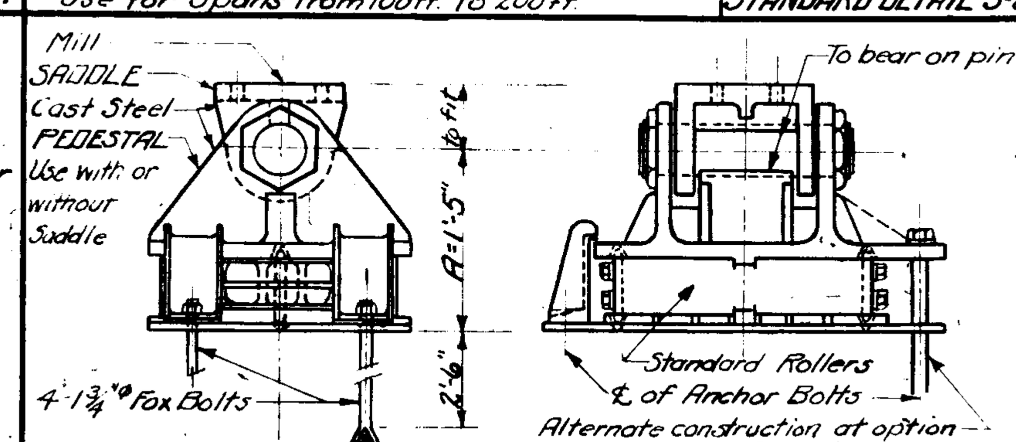

ROLLER EXPANSION PEDESTAL
Use for Spans of 200 ft. and over

STANDARD DETAIL S-7

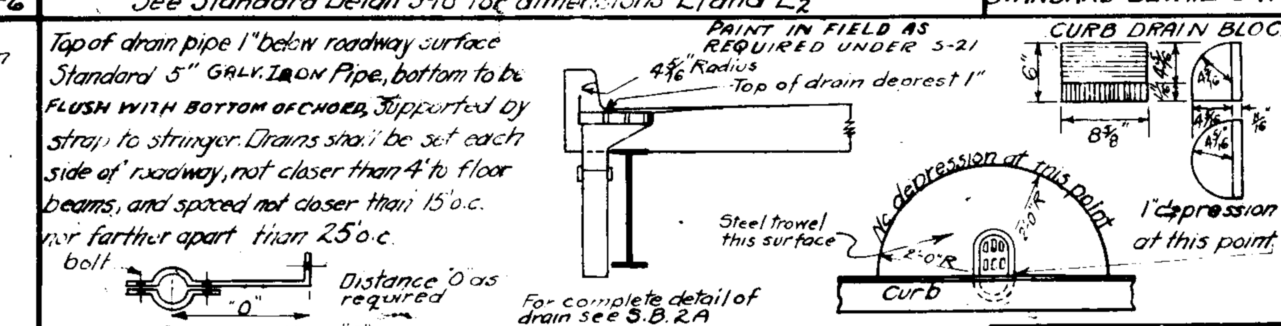

DRAINAGE DETAIL

STANDARD DETAIL S-12

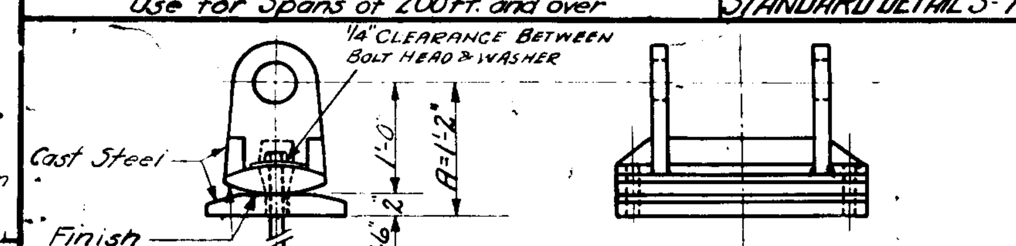

EXPANSION PEDESTAL
For use with Saddles, where required, as shown in S-5 and S-6. Use for Spans up to 100 ft.

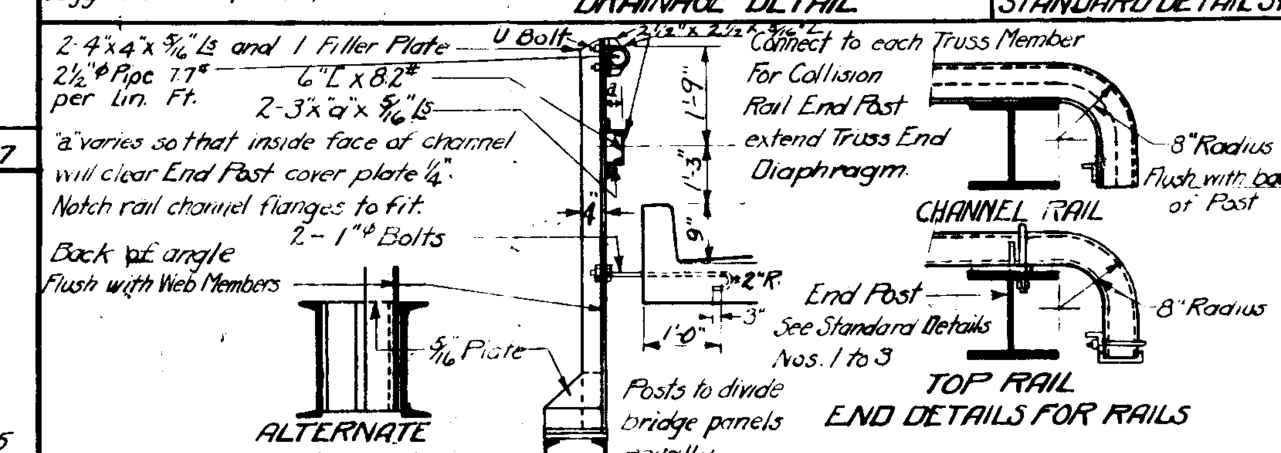

DETAIL OF COLLISION RAIL AND INTERMEDIATE POST

STANDARD DETAIL S-13

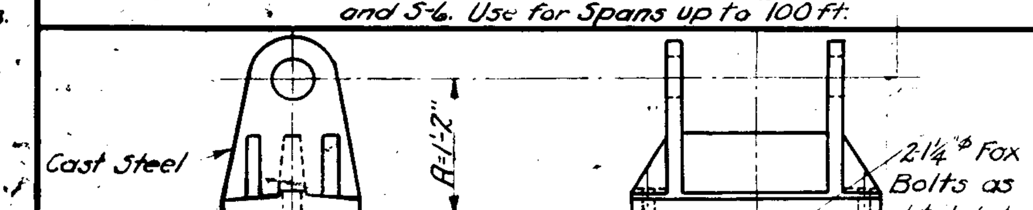

FIXED PEDESTAL
For use with Saddles, where required, as shown in S-5 and S-6. Use for Spans up to 100 ft.

STANDARD DETAIL S-8

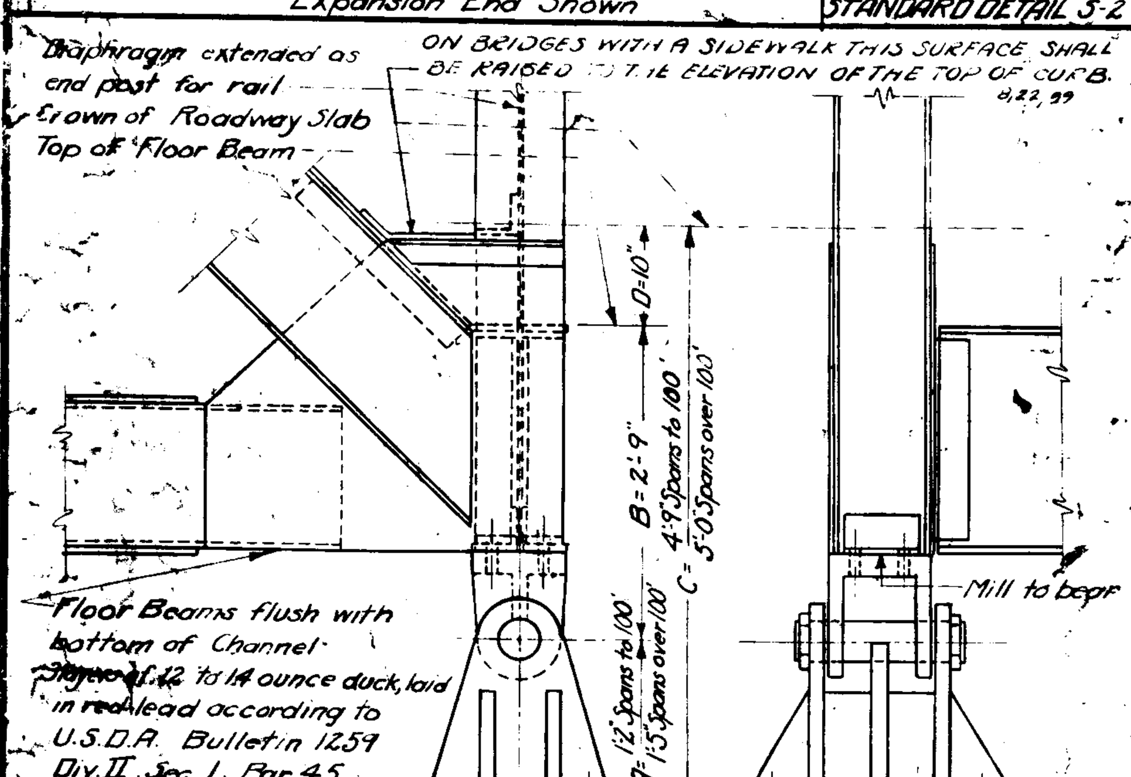

DETAIL AT SUPPORT
Fixed End Shown

STANDARD DETAIL S-3

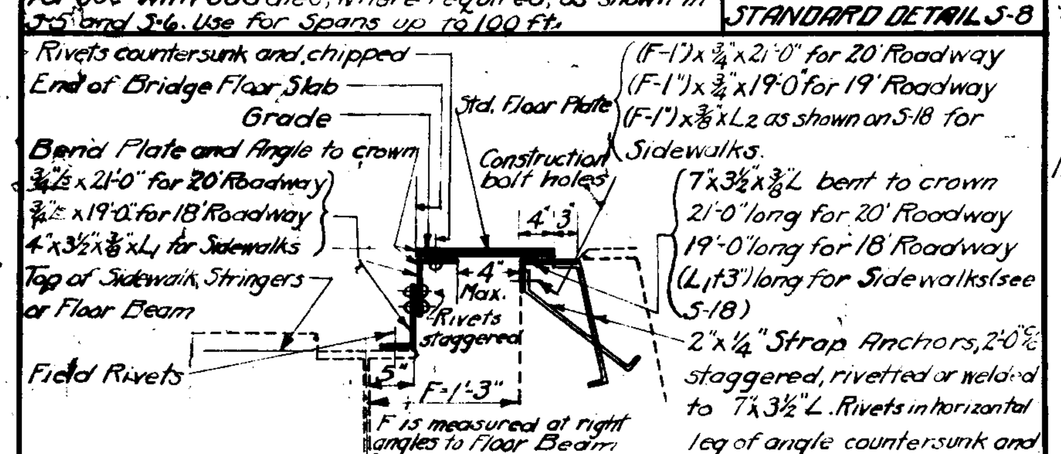

APRON PLATE FOR BRIDGE FLOOR SLAB
Use for Spans of 150 feet and over at Expansion End. See S-10 for Fixed End.

STANDARD DETAIL S-9

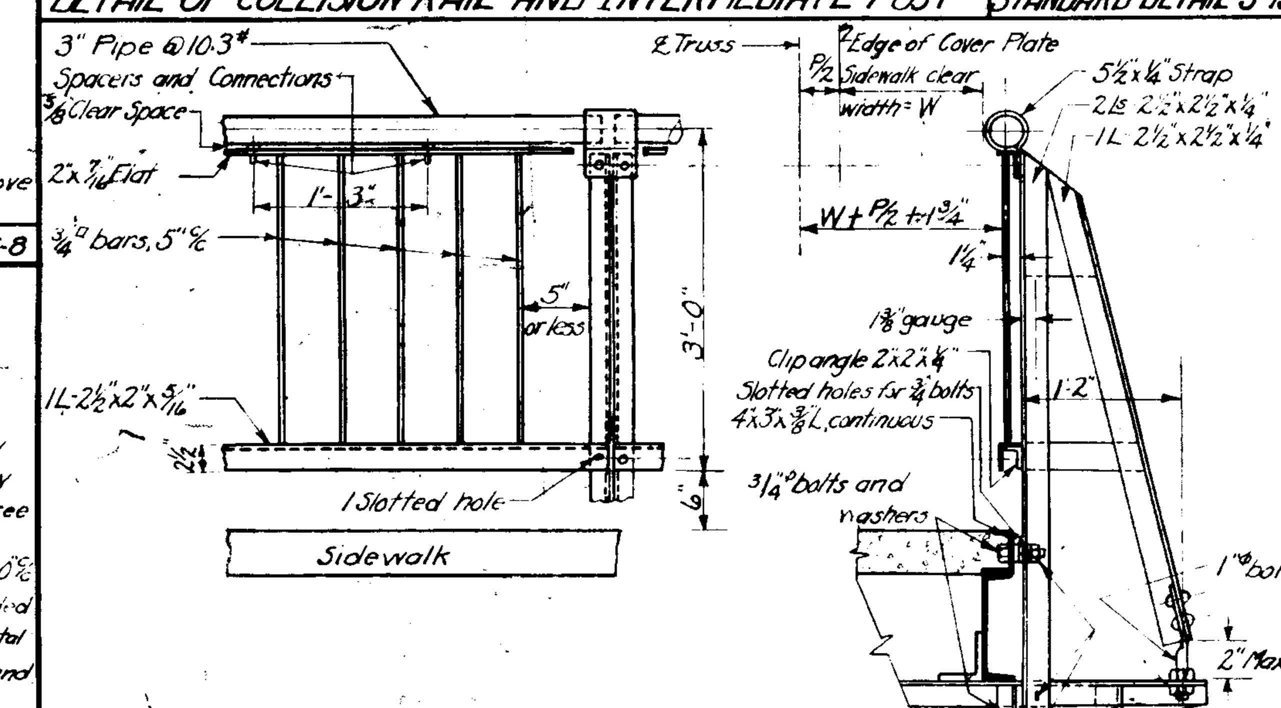

DETAIL OF SIDEWALK RAIL AND INTERMEDIATE POST

STANDARD DETAIL S-14

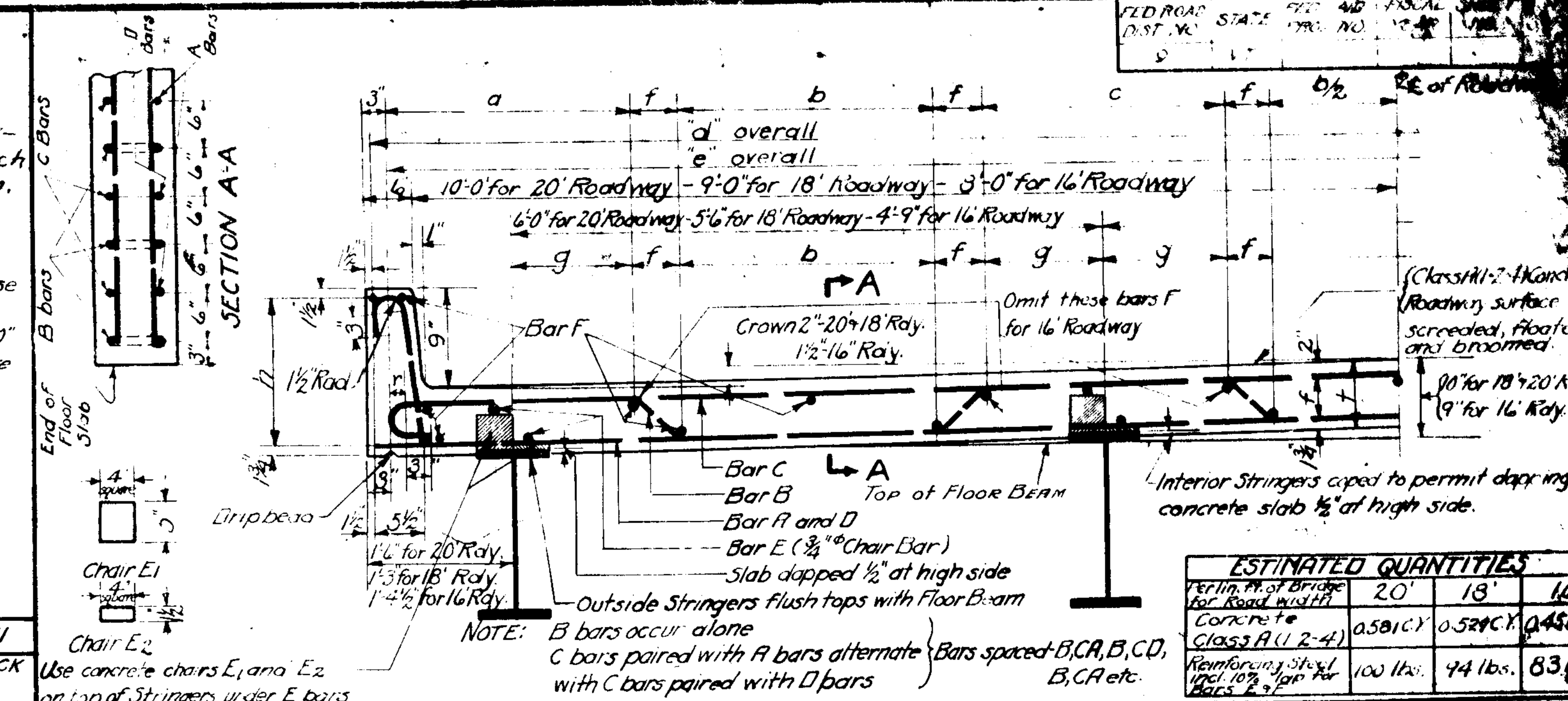

ESTIMATED QUANTITIES	20'	18'	16'
Per lin. ft. of Bridge for Road width	20'	18'	16'
Concrete Class A (1-2-4)	0.581 C.Y.	0.524 C.Y.	0.450 C.Y.
Reinforcing Steel incl. 10% lap for Bars E & F	100 lbs.	94 lbs.	83 lbs.

REINFORCING BAR SCHEDULES

FOR 20' ROADWAY (t=8½")

Bar Mark	Size	Spacing	Type	a	b	c	d	e	f	g	h	r	Bar Length
A	⅜"φ	24"		–	–	–	20'-9"	–	–	–	–	–	20'-9"
B	⅝"φ	12"		2'-6"	2'-8½	2'-6"	–	20'-6"	4¾"	1'-3"	–	2½	22'-9
C	⅝"φ	12"		–	–	–	–	20'-6"	–	–	–	2½	21'-9
D	⅜"φ	24"		–	–	–	20'-9	–	–	–	1'-2¼	–	23'-3
E	¾"φ		Straight, continuous lapped 24"	–	–	–	–	–	–	–	–	–	as req'd
F	½"φ		Straight, continuous lapped 24"	–	–	–	–	–	–	–	–	–	as req'd

FOR 18' ROADWAY (t=8½")

Bar Mark	a	b	c	d	e	f	g	h	r	Bar Length
A	–	–	–	18'-9"	–	–	–	–	–	18'-9
B	2'-2"	2'-6½	2'-2	–	18'-6	4¾	1'-1"	–	2½"	20'-9
C	–	–	–	–	18'-6	–	–	–	2½"	19'-9
D	–	–	–	18'-9	–	–	–	1'-2¼	–	21'-3
E	–	–	–	–	–	–	–	–	–	as req'd
F	–	–	–	–	–	–	–	–	–	as req'd

FOR 16' ROADWAY (t=8")

Bar Mark	a	b	c	d	e	f	g	h	r	Bar Length
A	–	–	–	16'-9	–	–	–	–	–	16'-9
B	1'-10¼	2'-6	1'-6½	–	16'-6	4¼	9¼	–	2"	18'-9
C	–	–	–	–	16'-6	–	–	–	2"	17'-9
D	–	–	–	16'-9	–	–	–	1'-1¼	–	19'-3
E	–	–	–	–	–	–	–	–	–	as req'd
F	–	–	–	–	–	–	–	–	–	as req'd

TRANSVERSE SECTION OF TYPICAL ROADWAY SLAB-4 STRINGERS
Section symmetrical about ℄. Bars continuous across full width of Slab. For 16' Rdy use chairs shown in Standard Detail S-19

STANDARD DETAIL S-15

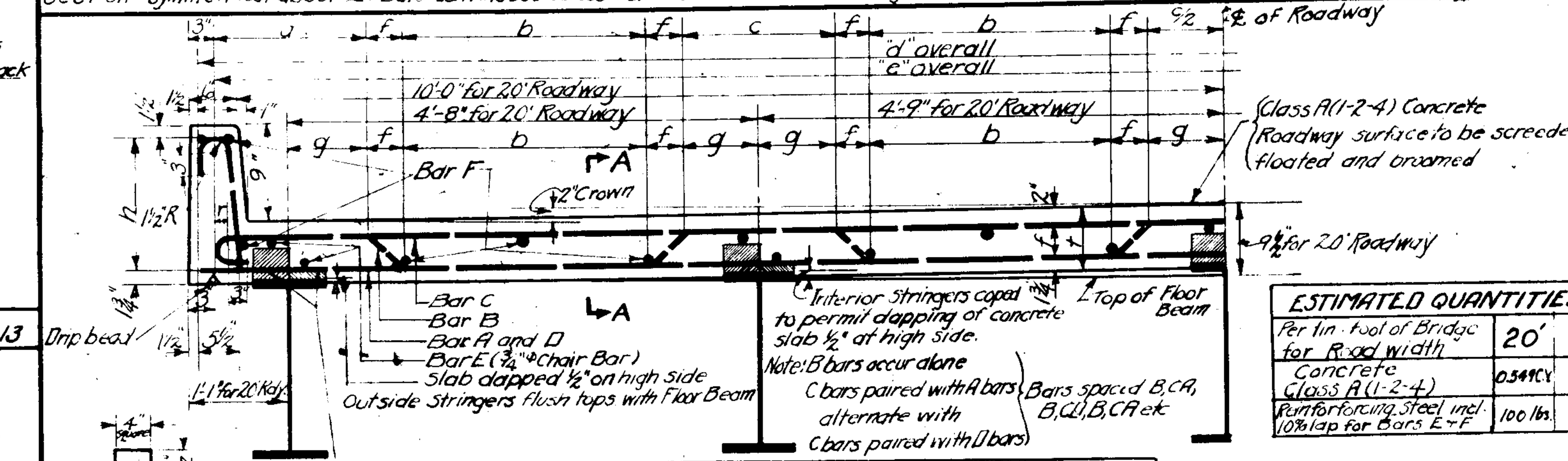

ESTIMATED QUANTITIES	
Per lin. foot of Bridge for Road width	20'
Concrete Class A (1-2-4)	0.549 C.Y.
Reinforcing Steel incl. 10% lap for Bars E+F	100 lbs.

REINFORCING BAR SCHEDULE

FOR 20' ROADWAY (t=8")

Bar Mark	Size	Spacing	Type	a	b	c	d	e	f	g	h	r	Bar Length
A	⅝"φ	24"		–	–	–	20'-9	–	–	–	–	–	20'-9
B	⅝"φ	12"		1'-6¼	2'-6"	1'-6½	–	–	4¼"	9¼	–	2"	22'-9
C	⅝"φ	12"		–	–	–	–	20'-6	–	–	–	2"	21'-9
D	⅝"φ	24"		–	–	–	20'-9"	–	–	–	1'-1¾	–	23'-3
E	¾"φ		straight, continuous, lapped 24"	–	–	–	–	–	–	–	–	–	as req'd
F	½"φ		straight, continuous, lapped 24"	–	–	–	–	–	–	–	–	–	as req'd

TRANSVERSE SECTION OF TYPICAL ROADWAY SLAB-5 STRINGERS
Section symmetrical about ℄. Bars continuous across full width of Slab

STANDARD DETAIL S-19

PAINTING: ONE SHOP COAT OF APPROVED RED LEAD & OIL, ONE FIELD COAT OF APPROVED RED LEAD & OIL; ONE FIELD COAT OF GRAY BRIDGE PAINT AS SPECIFIED BELOW.

THE GREY BRIDGE PAINT SHALL BE COMPOSED OF FROM (70) TO SEVENTY FIVE (75) PER CENT, BY WEIGHT, OF PIGMENT IN PASTE FORM AND FROM THIRTY (30) TO THIRTY-FIVE (35) PER CENT OF VEHICLE; OR SIXTY-FIVE (65) TO SEVENTY (70) PER CENT, BY WEIGHT, OF DRY PIGMENT.

PIGMENT: THE PIGMENT SHALL BE COMPOSED OF NOT LESS THAN SIXTY-FIVE (65) PER CENT OF PURE WHITE LEAD AND NOT LESS THAN TWENTY (20) PER CENT OF PURE ZINC WHITE, ALL FINELY GROUND. NOT MORE THAN FIFTEEN (15) PER CENT OF INERTS SHALL BE PERMITTED.

VEHICLE: THE VEHICLE SHALL BE COMPOSED OF NOT LESS THAN NINETY (90) PER CENT OF PURE RAW LINSEED OIL AND SUFFICIENT FIRST QUALITY JAPAN OR OTHER APPROVED DRIER TO CAUSE THE APPLIED PAINT TO DRY IN APPROXIMATELY THREE (3) DAYS, BUT IN NO CASE SHALL THE DRIER EXCEED TEN (10) PER CENT.

TO THE MIXED PAINT SHALL BE ADDED SEVEN (7) OZ. OF DRY LAMP BLACK PER GALLON OF PAINT FOR TINTING PURPOSES.

NO PAINT SHALL BE USED UNTIL APPROVED BY THE ENGINEER. 8/22/29

STANDARD DETAILS S-21B

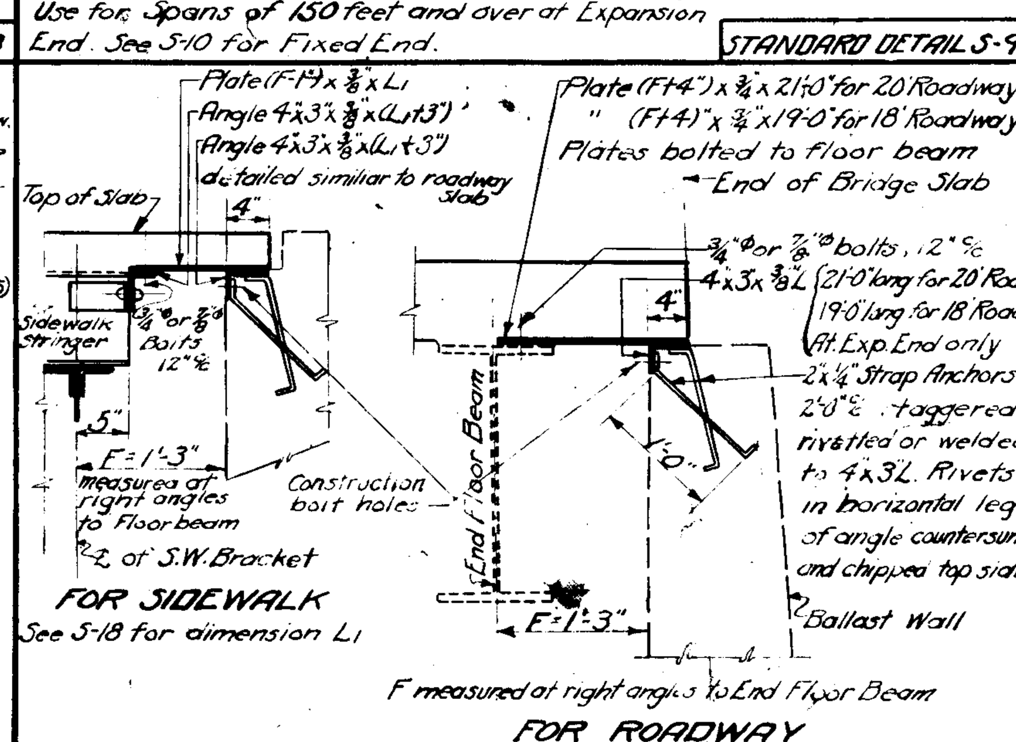

APRON PLATE FOR BRIDGE FLOOR SLAB
Use for Spans up to 150 ft. at Expansion End.
Use for all Spans at Fixed End.

STANDARD DETAIL S-10

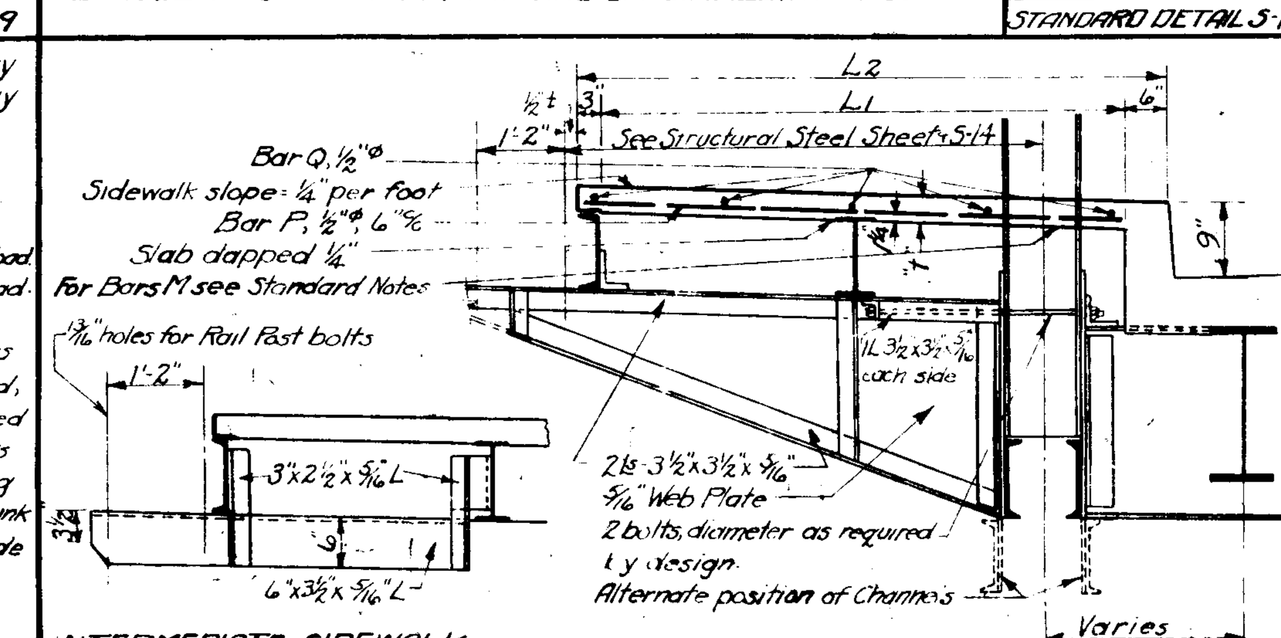

INTERMEDIATE SIDEWALK RAIL SUPPORT

SIDEWALK BRACKET

Note: Sidewalk Reinforcement as shown except when detailed otherwise on Structural Sheet. For "t" see Structural Sheet

STANDARD DETAIL S-18

GENERAL NOTES

Materials and workmanship shall conform to the Standard Road and Bridge Specifications of the Vermont Department of Highways, 1926.

The lump sum price for furnishing, fabricating, erecting and painting structural steel work shall include all work and materials shown on the Structural Steel Sheets and called for by reference to Sheet SB-1 except concrete and reinforcing steel.

Drainage pipes and supports shall be included in contract price for Structural Steel.

For paint note See Standard Detail S-21-B lower left hand corner.

All exposed edges of concrete shall be chamfered. Face dimension of chamfer shall be 1".

In pouring sidewalk slabs clearance shall be maintained around web members of trusses as shown in diagram. Furnish extra bars "M".

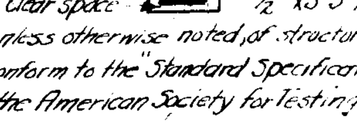

All reinforcing steel shall be deformed bars, unless otherwise noted, of structural or intermediate grade. Reinforcing steel shall conform to the "Standard Specifications for Billet Steel Concrete Reinforcement Bars" of the American Society for Testing Materials, Serial Designation A15-14.

Concrete poured at air temperatures lower than 40°F shall conform to the "Revised Specifications for Concreting in Cold Weather" of the Vermont Department of Highways.

Steel sections alternate to those billed may be furnished at the option of the Contractor if approved in writing by the Engineer.

All dimensions given on this sheet (SB-1) are typical and shall apply unless otherwise noted on Steel Superstructure Sheet.

STANDARD NOTES S-21

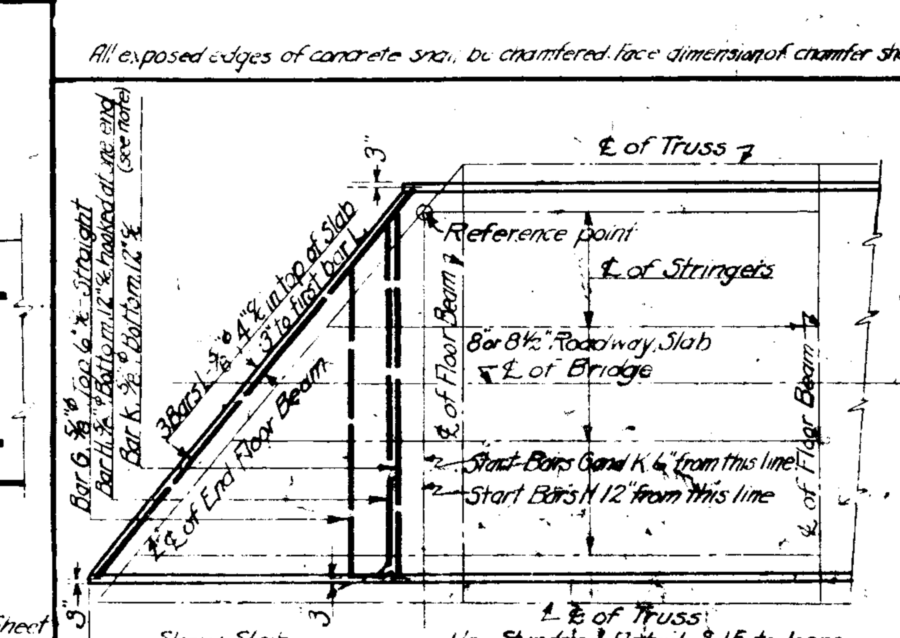

CONCRETE ROADWAY SLAB AT SKEW END
End Detail of Bars H same as Bars B of Standard Slab

STANDARD DETAIL S-17

For Constructions Joints and Score Marks see Sheet SB 2

STANDARD DETAIL S-16

FED. ROAD DIST. NO.	STATE	FED. AID PROJ. NO.	FISCAL YEAR	SHEET NO.
9				

TYPICAL DETAILS FOR STEEL BRIDGES

STATE OF VERMONT
DEPARTMENT OF HIGHWAYS

CORRECT
A. D. Bishop
BRIDGE ENGINEER

Designed by M.L.W.
Drawn by R.F.T.
Traced by R.F.T. 4/10/28 5/24/28 S-19 added S15 rev.
Checked by M L Woodruff 5/24/28
Series SB No 1
Filed

RICHFORD-SUTTON BHF 0814(1)
REFERENCE PLANS
FOR INFORMATIONAL PURPOSES ONLY
SHEET 22 OF 49

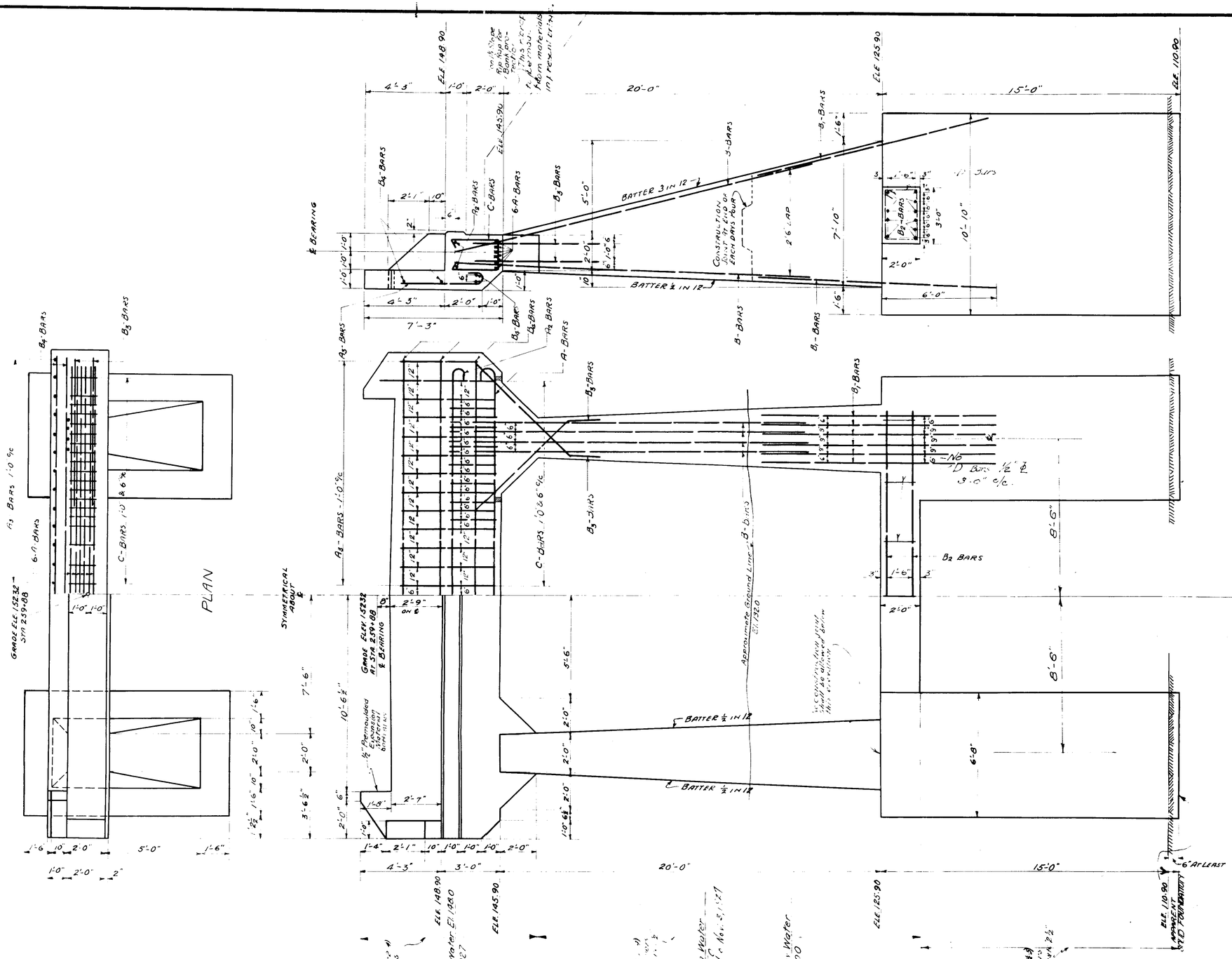

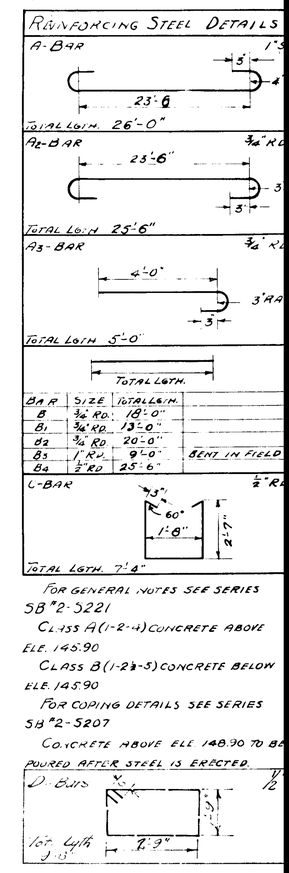

FOR GENERAL NOTES SEE SERIES SB "2-5221

CLASS A (1-2-4) CONCRETE ABOVE ELE. 145.90

CLASS B (1-2½-5) CONCRETE BELOW ELE. 145.90

FOR COPING DETAILS SEE SERIES SB "2-5207

CONCRETE ABOVE ELE 148.90 TO BE POURED AFTER STEEL IS ERECTED.

BUILT AS PER PLAN

ABUTMENT NO1-AT STA. 259+88
INTERNATIONAL BRIDGE
BETWEEN
SUTTON, P.Q.-CANADA.
AND
EAST RICHFORD, VT.-U.S.A.

SCALE 3/8" = 1'-0"

RICHFORD-SUTTON BHF 0814(1)
REFERENCE PLANS
FOR INFORMATIONAL PURPOSES ONLY
SHEET 23 OF 49

ESTIMATED QUANTITIES		
STRUCTURE EXCAVATION 179 190 CU. YDS.		
CONCRETE CLASS A (1-2-4) 11 CU. YDS. for Floor and Beams	12.9	
CONCRETE CLASS A (1-2-4) 38 CU. YDS. for Abutments and Piers	32.1	
CONCRETE CLASS B (1-2½-5) 69 CU. YDS. for Abutments and Piers	68.5	
REINFORCING STEEL 2300 2960		

Surveyed		
Designed by	F.W.G.	8/1
Drawn by	F.W.G.	8/14
Traced by	D.W.P.	8/31
Checked by	8/17-28	
Series F.B. No. 20-B	Filed	
Sheet 7 of 13 Sheets		

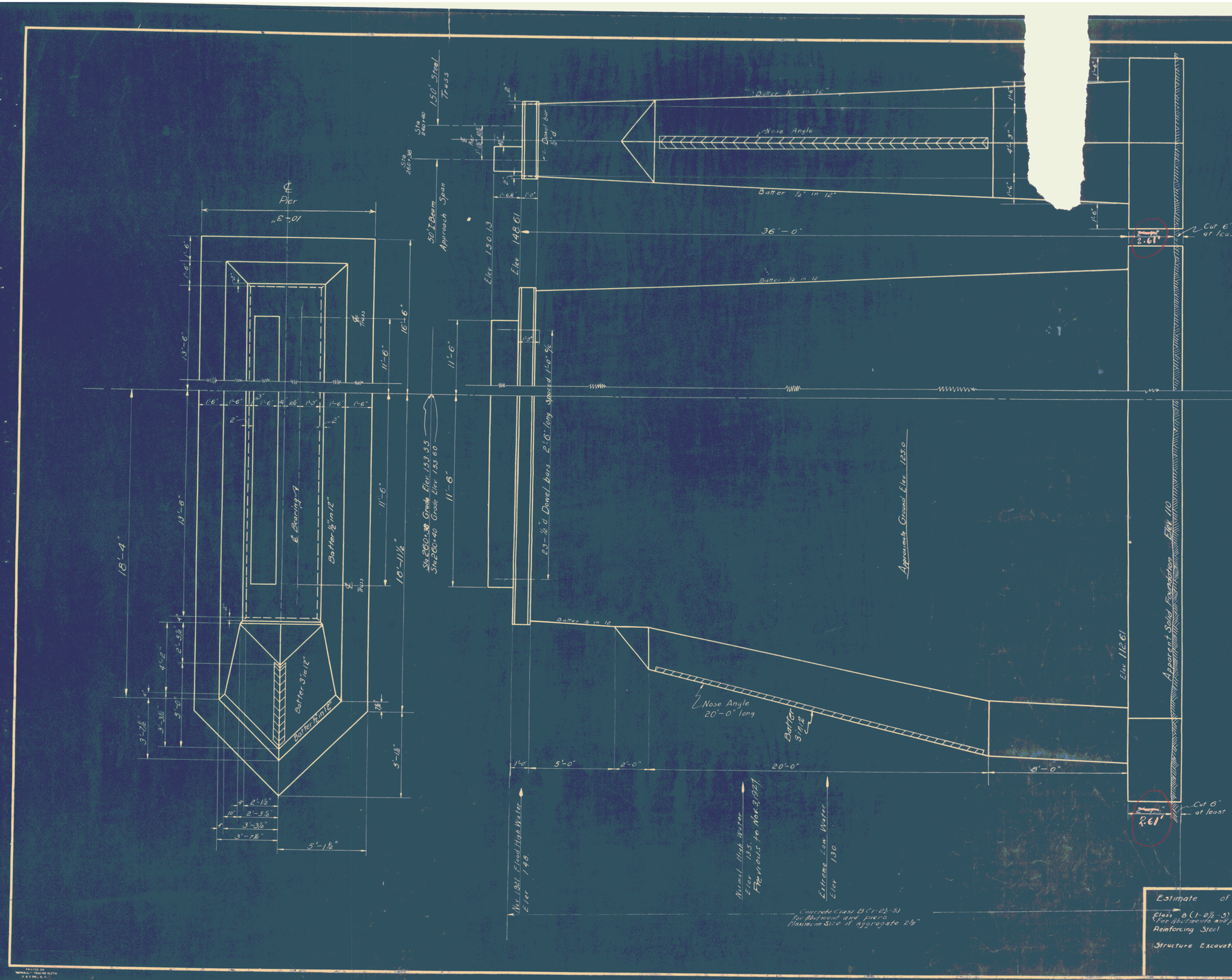

RICHFORD-SUTTON BHF 0814(1)
REFERENCE PLANS
FOR INFORMATIONAL PURPOSES ONLY
SHEET 24 OF 49

PIER No 1
FOR INTERNATIONAL BRIDGE
BETWEEN
SUTTON, P.Q., CANADA
AND
EAST RICHFORD, VT., U.S.A.

SCALE: ⅜" = 1'-0"

Estimate of Quantities.	
Class B (1-2½-5) Concrete for Abutments and piers	284.4 280 cu. yds
Reinforcing Steel	293 330 lbs.
Structure Excavation	278 10 cu. yds

Surveyed by
Designed by F.W.G. 8/2/28
Drawn by F.W.G. 8/2/28
Traced by W.A. Collins 8/2/28
Checked by J.R.L. 8/17-28
Series F.R. No. 20-B Filed
Sheet 8 of 13 Sheets.

F.P.R.
20-B 1928 9 13

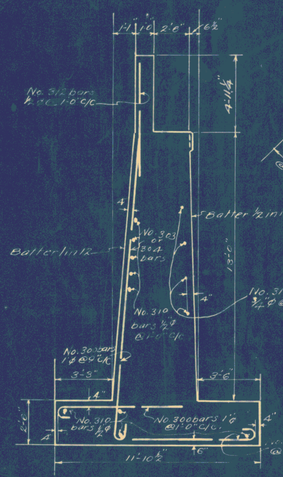

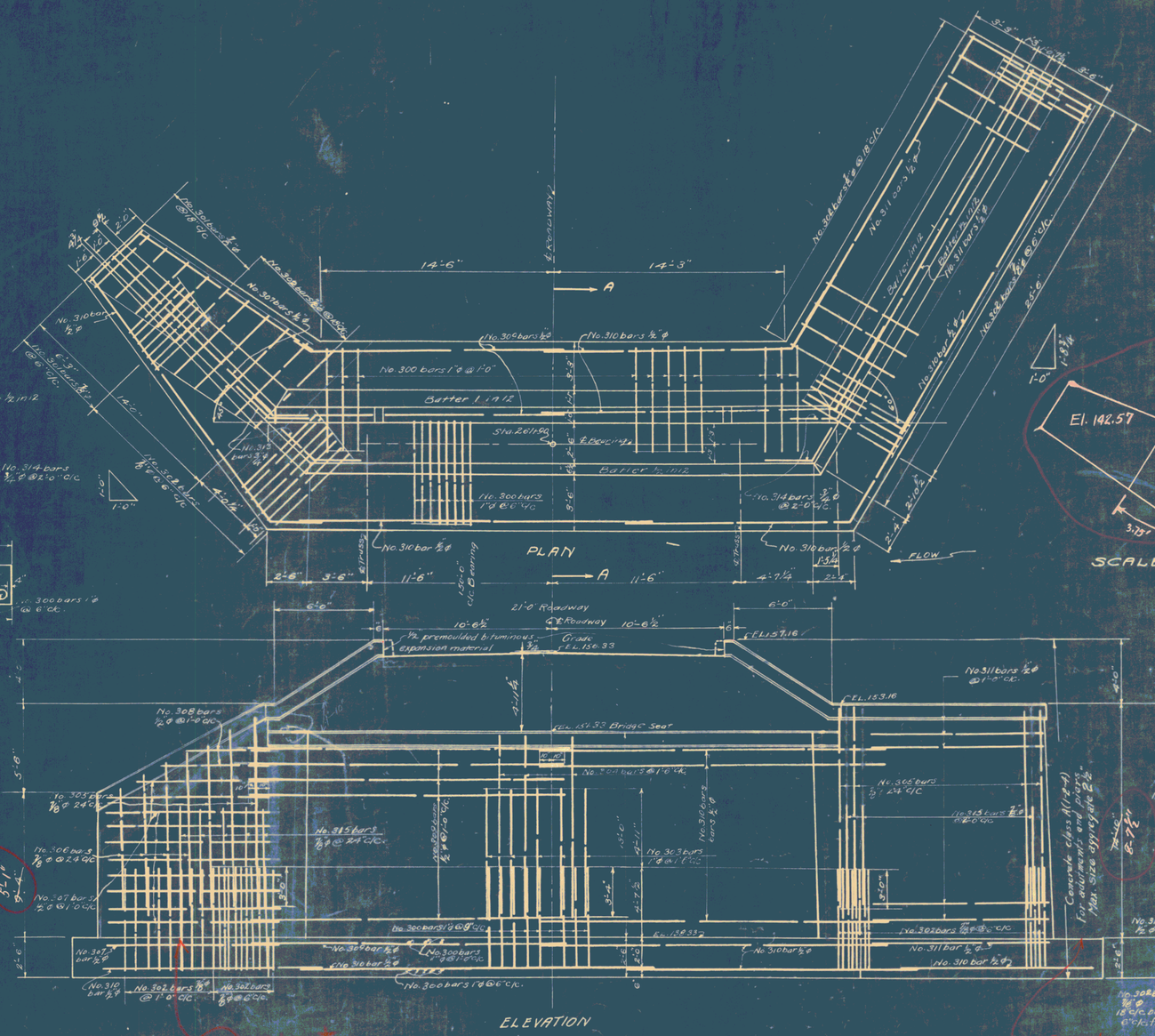

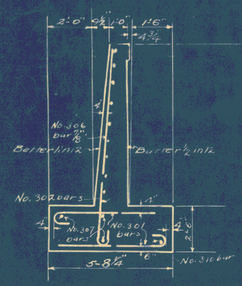

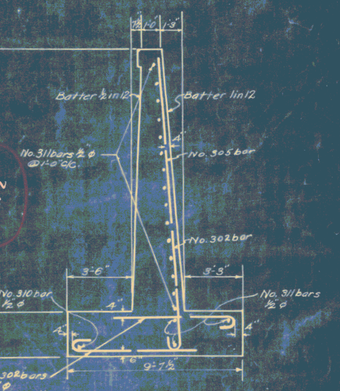

Notes:
All concrete to be class A (1-2-4) for abutments and piers
For General Notes see S.B. No. 2. Standard Detail 5221
Coping detail not shown, see S.B. No. 2 Standard Detail 5220
Weepholes not shown, see S.B. No. 2 Standard Detail 5221
Construction joint not shown, see Standard Detail 5224
Height, length and angle of wings may be varied by the Engineer in the field.

STEEL SCHEDULE		
Bar	Detail	Size
300	3" Rad. 6'-6" Total Length 7'-6"	1" ϕ
301	4'-6" Total Length 5'-6"	7/8" ϕ
302	6'-6" Total Length 7'-6"	7/8" ϕ
303	Straight 8'-3"	1" ϕ
304	11'-8"	1" ϕ
305	12'-6"	7/8" ϕ
306	10'-0"	7/8" ϕ
307	13'-9"	1/2" ϕ
308	8'-3"	1/2" ϕ
309	19'-6"	1/2" ϕ
310	22'-0"	1/2" ϕ
311	21'-9"	1/2" ϕ
312	6'-6"	1/2" ϕ
313	5'-0" 45° 3'-0"	1/2" ϕ
314	5'-0" 60° 3'-0"	3/4" ϕ
315	7'-0"	7/8" ϕ

ABUTMENT NO. 2
AT STATION 261+90
INTERNATIONAL BRIDGE
BETWEEN
SUTTON, P.Q. CAN.
AND
RICHFORD, VT. U.S.A.

RICHFORD-SUTTON BHF 0814(1)
REFERENCE PLANS
FOR INFORMATIONAL PURPOSES ONLY
SHEET 25 OF 49

ESTIMATED QUANTITIES		
Class A for Abutments and Piers		
Concrete Class A (1-2-4)	160	Cu. Yds. 232
Reinforcing Steel	9100	Lbs. 58939
Structure Excavation	150	Cu. Yds.
	162	

Surveyed by
Designed by F.W.G.
Drawn by L.A.D. 8/14/28
Traced by L.A.D. 8/15/28
Checked by J.B.A. 8/17-28
Series F.P. No. 20-B Filed
Sheet 9 of 13 Sheets

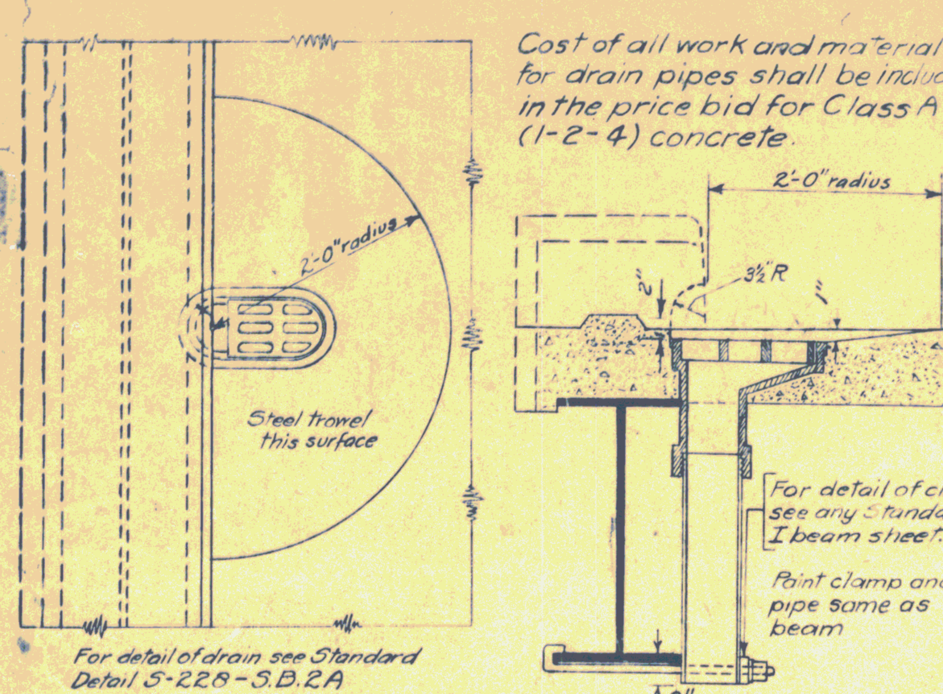

Cost of all work and material for drain pipes shall be included in the price bid for Class A (1-2-4) concrete.

DRAIN DETAIL FOR I-BEAM BRIDGES

STANDARD DETAIL-S201

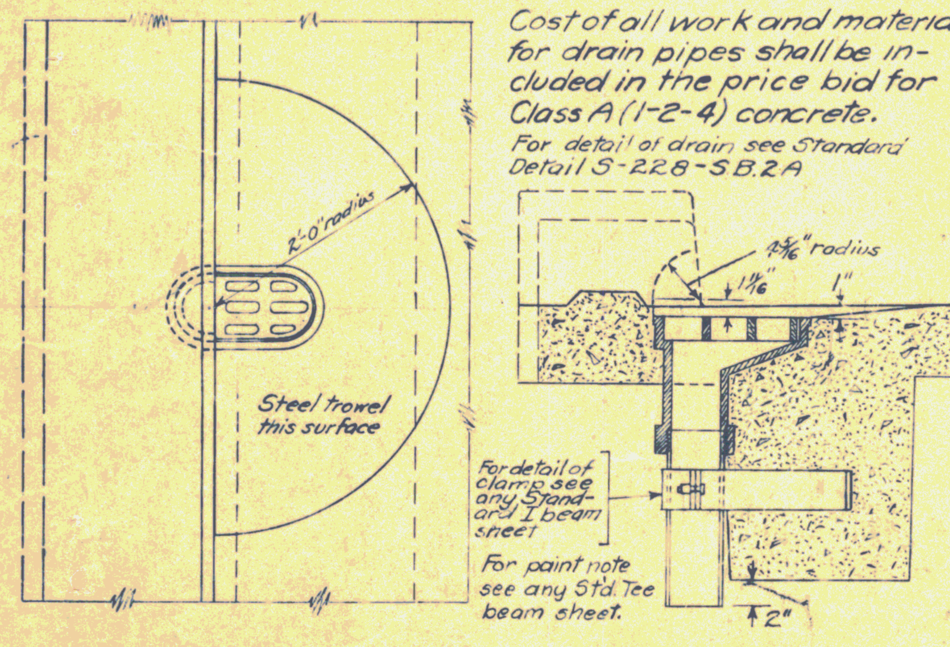

Cost of all work and material for drain pipes shall be included in the price bid for Class A (1-2-4) concrete.

For detail of drain see Standard Detail S-228-S.B.2A

DRAIN DETAIL FOR TEE BEAM BRIDGES

STANDARD DETAIL-S202

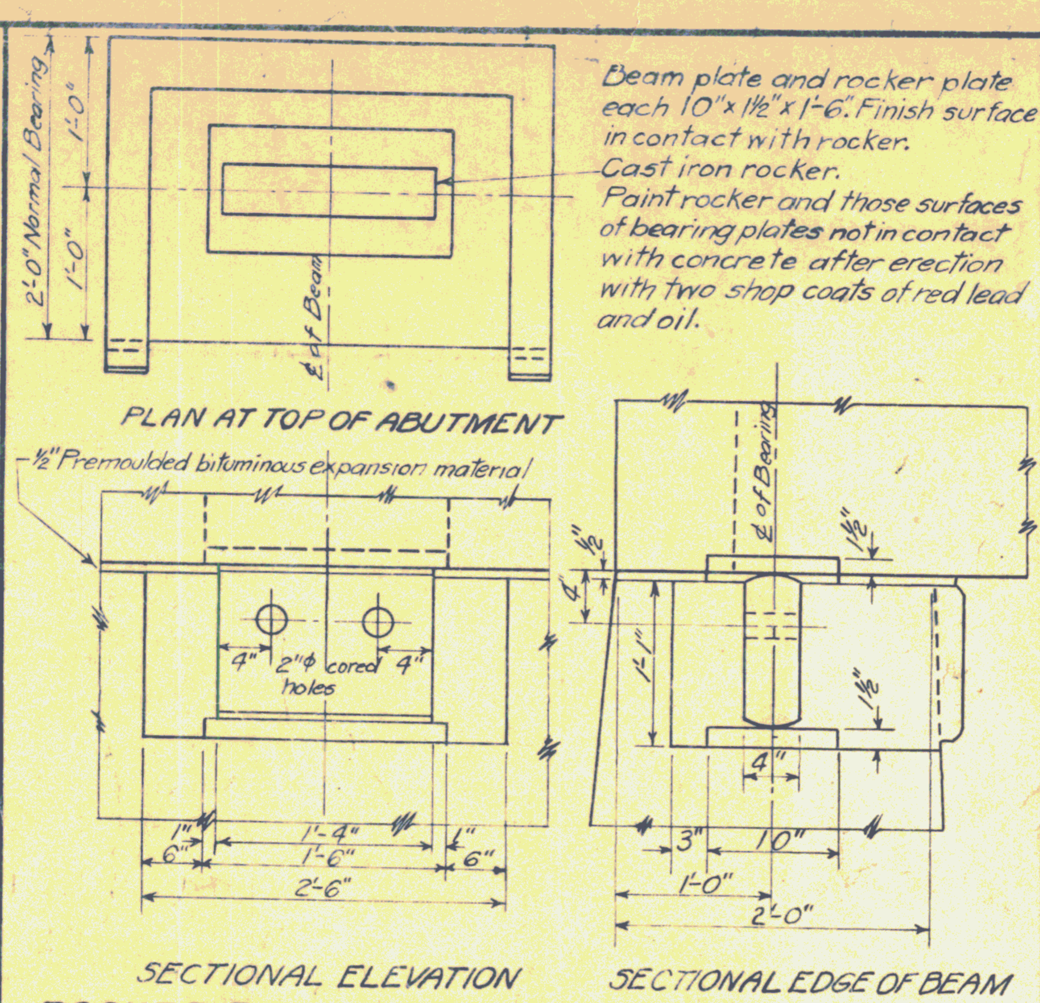

Beam plate and rocker plate each 10"x1½"x1'-6". Finish surface in contact with rocker.
Cast iron rocker.
Paint rocker and those surfaces of bearing plates not in contact with concrete after erection with two shop coats of red lead and oil.

ROCKER EXPANSION DEVICE AND POCKET FOR TEE BEAM SPANS OF 45' AND OVER

STANDARD DETAIL-S205

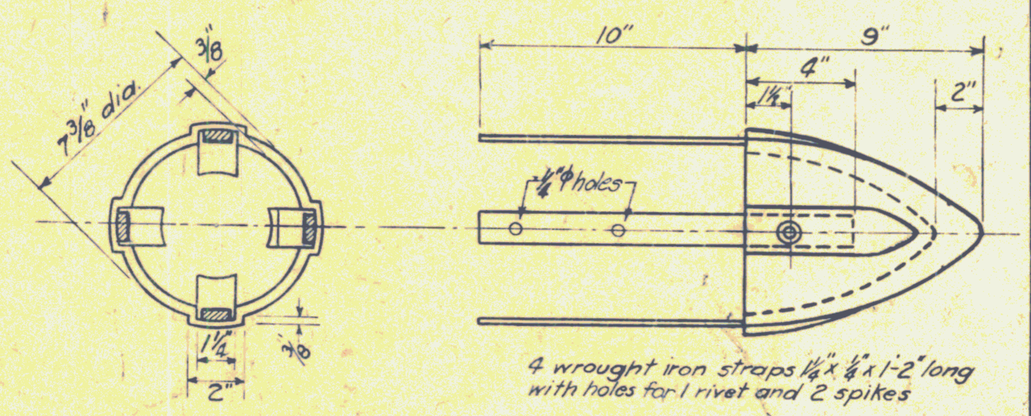

CAST STEEL PILE SHOE FOR 6" TO 8" TIPS

If jetting is necessary, two water jets should be used with a water pressure of at least 150# per sq. in. Pump to be of piston type with a 6" diam. intake pipe and a 4" diameter outlet pipe. The jet pipe shall be about 2" dia., nozzle to be circular in section and ½" to ¾" in diameter.
Unit price bid for piles shall include jetting if necessary, and furnishing and setting pile shoes.
Pile shoes as per sketch to be used as directed by the Engineer.

STANDARD DETAIL-S206

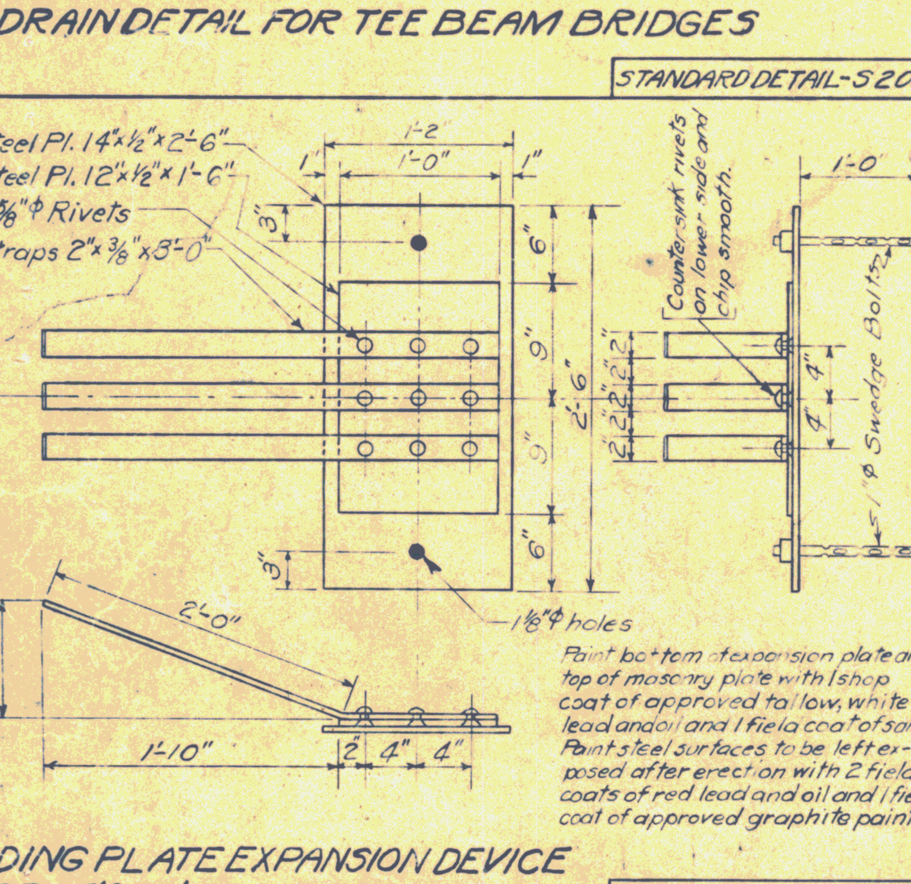

Paint bottom of expansion plate and top of masonry plate with 1 shop coat of approved tallow, white lead and oil and 1 field coat of same. Paint steel surfaces to be left exposed after erection with 2 field coats of red lead and oil and 1 field coat of approved graphite paint.

SLIDING PLATE EXPANSION DEVICE FOR 35' & 40' SPAN TEE BEAMS

STANDARD DETAIL-S203

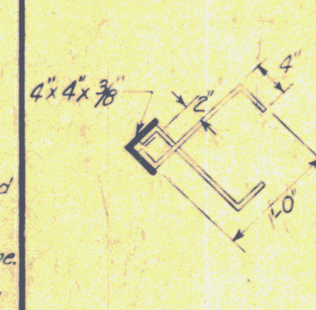

Nose angle to extend from under side of pier coping to top of footing on upstream end only of each pier. 2"x¼" straps 2'-0" c/c, alternated. Straps may be welded or rivetted. If rivetted, exposed rivet heads must be countersunk and chipped.
All structural steel nose guards shall be given one shop coat of red lead and oil and two field coats of standard white guard rail paint on exposed face only.
All work and materials required for furnishing and placing nose guards will be paid for at unit price bid for reinforcing steel.

PIER NOSE ANGLE

STANDARD DETAIL-S207

1 Steel Plate
15° Skew 2'-10½"x1'-1½"
30° Skew 3'-5⅝"x1'-0" x½"
45° Skew 4'-4½"x10"

1 Steel Plate
15° Skew 1'-9⅞"x11½"
30° Skew 2'-2¾"x10½" x½"
45° Skew 2'-10"x8½"

	A	B
15°	8"	4⅞"
30°	1'-5¼"	10⅞"
45°	2'-6"	1'-6"

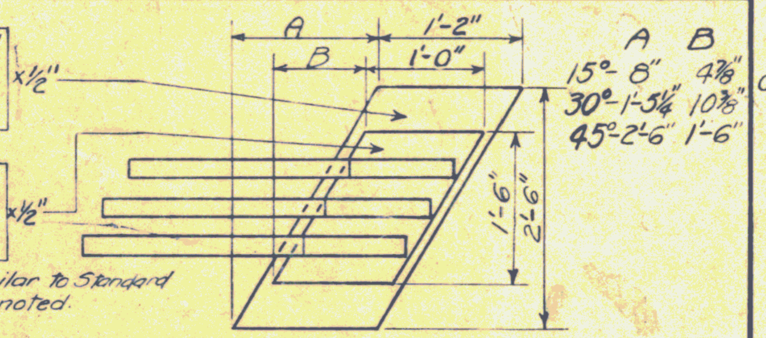

This expansion device similar to Standard Detail S-203 except as noted.

SLIDING PLATE EXPANSION DEVICE FOR 35' & 40' SKEW SPAN TEE BEAMS

STANDARD DETAILS 208

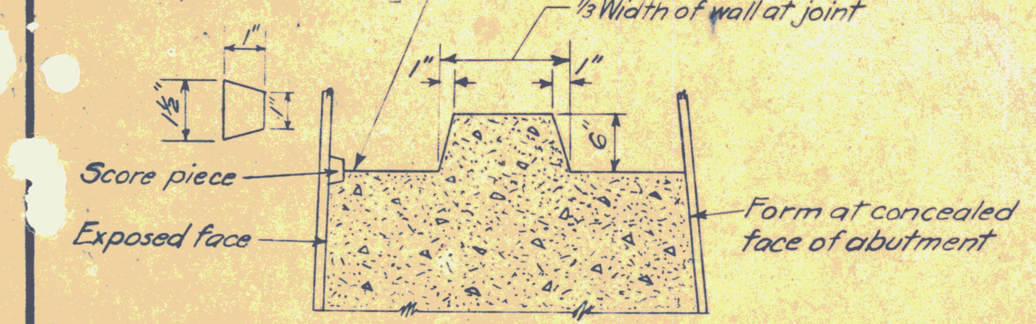

DETAILS-SCORE MARKS & CONSTRUCTION JOINTS FOR PIERS & ABUTMENTS

Unless otherwise directed by the Engineer, score pieces shall be equally spaced vertically at about 1'-9" for abutments up to 20' in height and 2'-6" for abutments above 20' in height; shall stop at underside of copings and shall be carried around ends of walls or piers where they may be exposed to view. Score marks shall line horizontally and shall be at same levels in all piers and abutments on the job. Construction joint may be made at any score mark.

Note: This detail is identical with S16-sheet S.B.-1

STANDARD DETAIL-S204

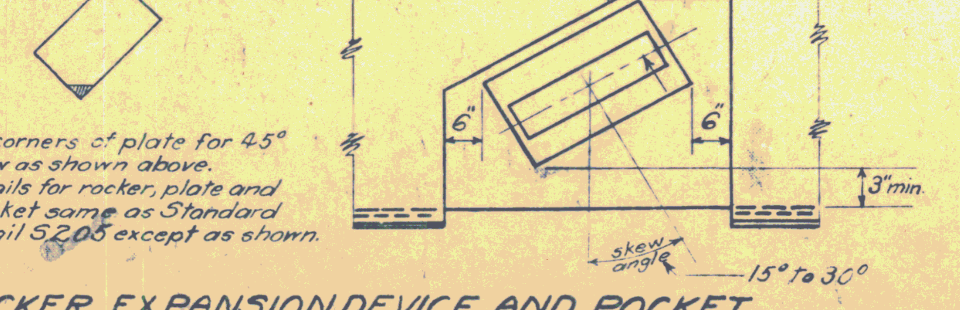

Cut corners of plate for 45° skew as shown above.
Details for rocker, plate and pocket same as Standard Detail S205 except as shown.

ROCKER EXPANSION DEVICE AND POCKET FOR TEE & I BEAM SKEW SPANS OF 45' AND OVER

STANDARD DETAIL-S209

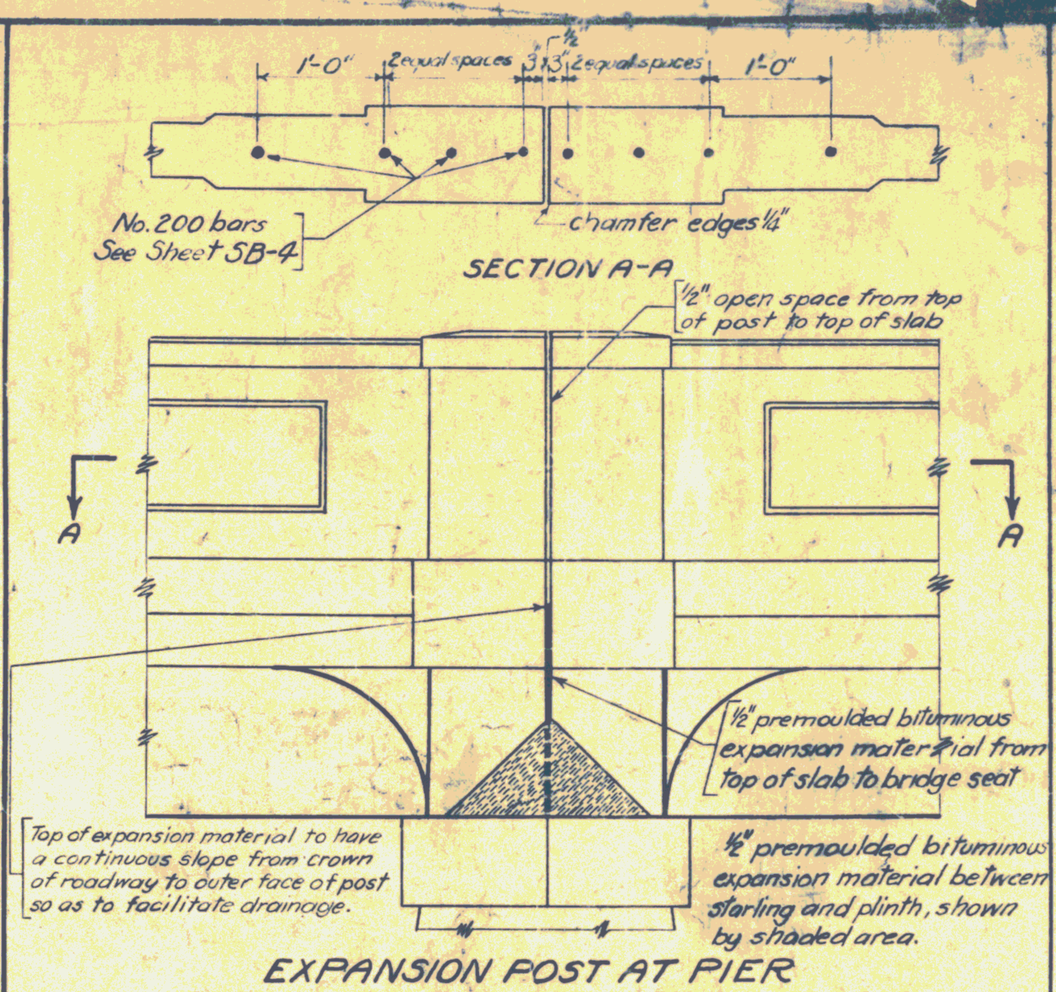

EXPANSION POST AT PIER FOR SOLID RAILS AS SHOWN ON SHEET SB-4

Condition shown is for one span expanding on pier. If two spans expand on pier increase ½" dimensions to 1".

STANDARD DETAIL-S210

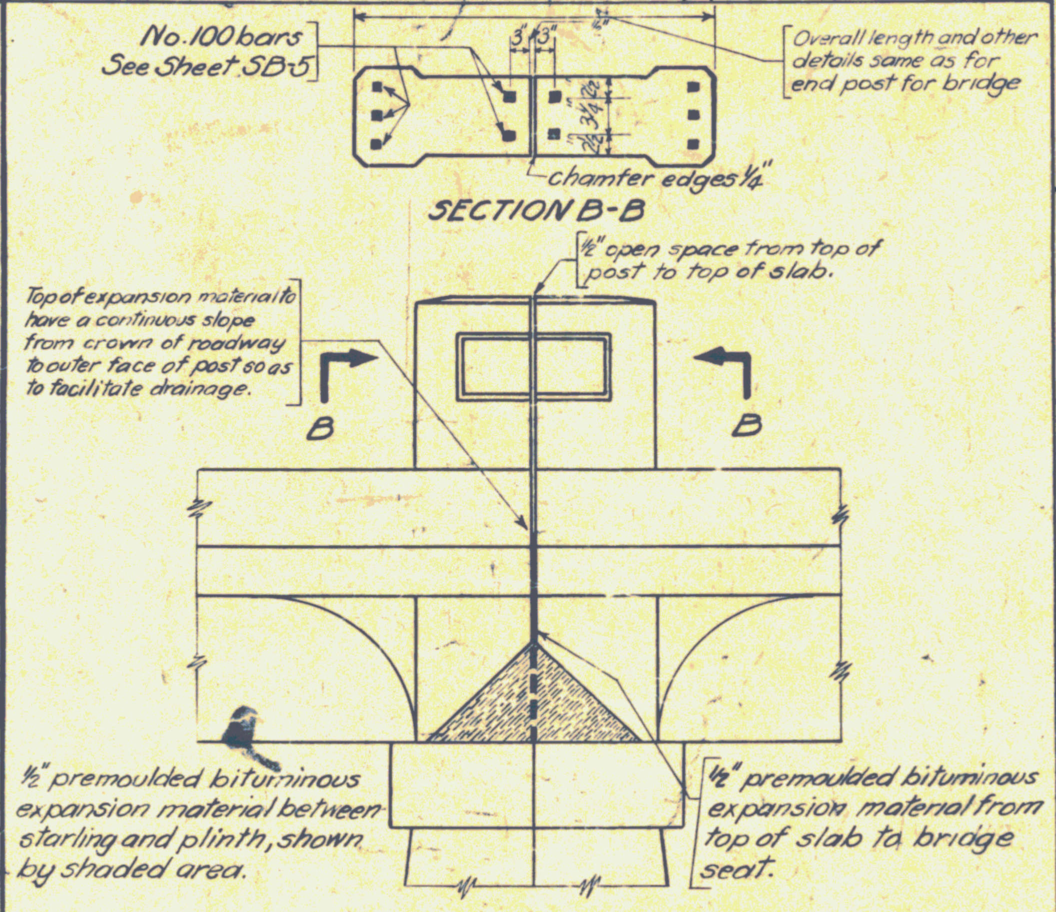

EXPANSION POST AT PIER FOR CABLE RAILS AS SHOWN ON SHEET SB-5

Condition shown is for one span expanding on pier. If two spans expand on pier increase ½" dimensions to 1".

STANDARD DETAIL-S211

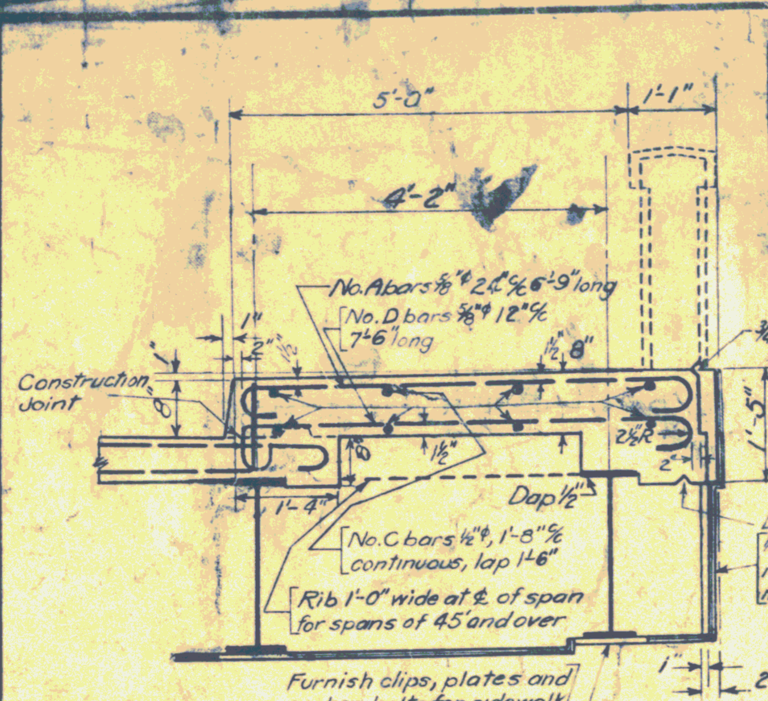

Sidewalk Stringers	
Span	Size of Beam
25'	21" 58# C.B.
30'	21" 58# C.B.
35'	24" 70# C.B.
40'	24" 79.5# B.I.
45'	27⅛" 91# B.I.
50'	29 [illegible]" 110# B.I.
55'	30⅛" 129# B.I.
60'	27⅞" 156# B.I.

SIDEWALK DETAIL FOR STANDARD I BEAM BRIDGES

For detail of D bars see S212.

QUANTITIES TO BE ADDED PER SIDEWALK TO ROADWAY QUANTITIES

Span	Conc. Class A	Rein. Steel	Struc. Steel
25	4.2	428	1600
30	5.0	508	1885
35	5.7	587	2615
40	6.5	667	3380
45	7.4	759	4410
50	8.1	832	5890
55	8.9	913	7540
60	9.7	993	9900

STANDARD DETAIL-S 213

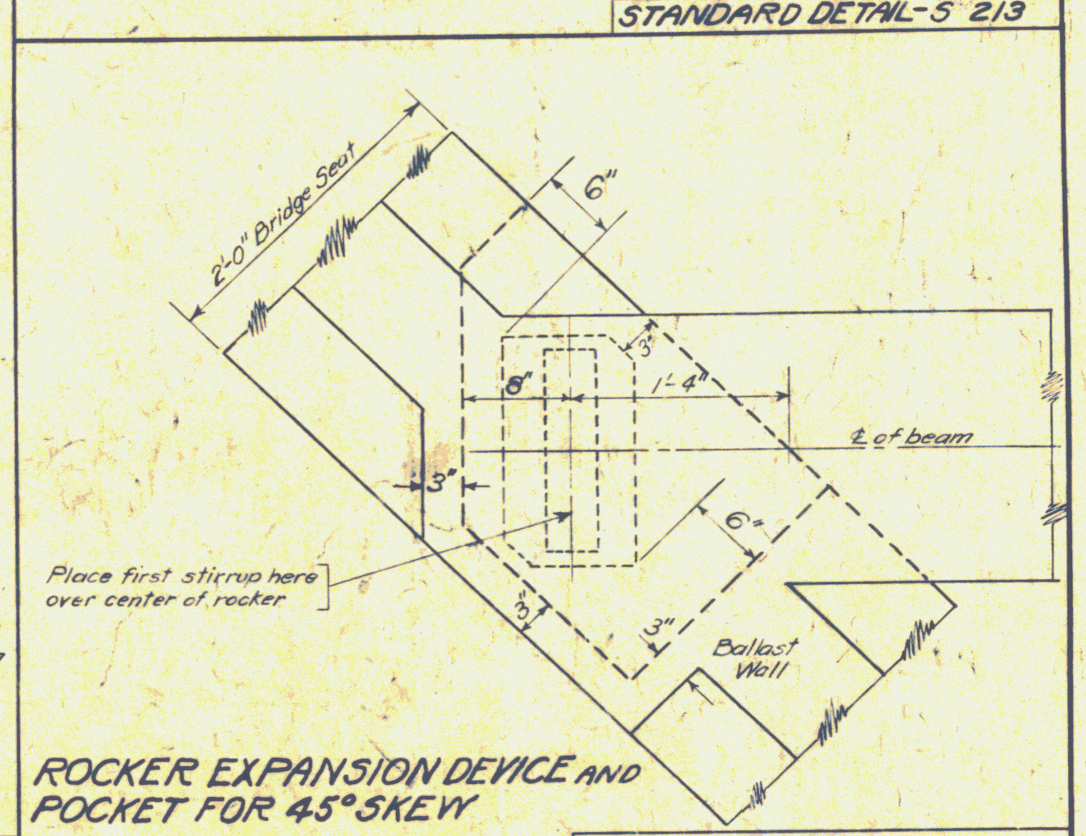

ROCKER EXPANSION DEVICE AND POCKET FOR 45° SKEW

STANDARD DETAIL-S 214

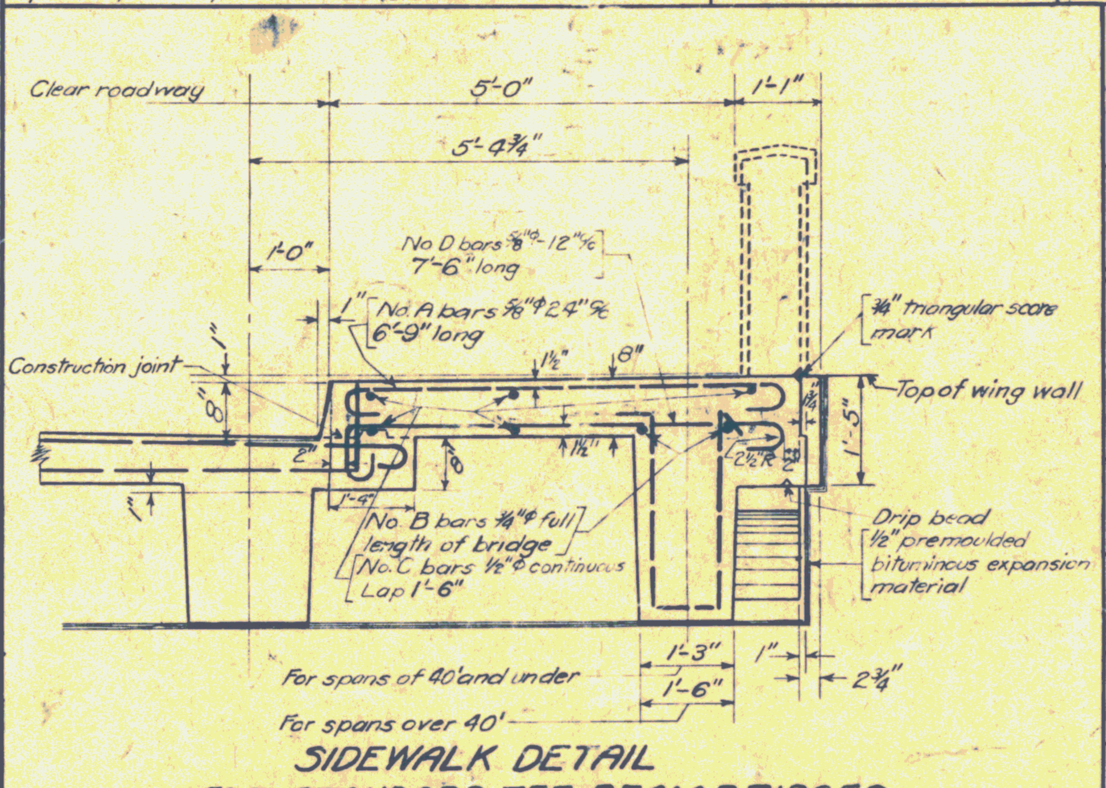

SIDEWALK DETAIL FOR STANDARD TEE BEAM BRIDGES

Span	Reinforcing steel in beam. Bending details same as for Std. bridge beams: Reqd.	Bar Mark	½"φ Stirrups: W	H	Total Lgth	Spacing from each end of beam, No. spaces @ 6"	12"	18"	24"	30"	No. Reqd.	D bars: No. Reqd.	Estimated quantities for one sidewalk and one beam: Concrete	Steel
25	2 1	No.1 No.2	11"	2'-4	6'-6"	4	2	2	2	1	23	28	6.3	984
30	2 1	No.1 No.2	11"	2'-7	7'-0"	4	2	2	2	2	25	33	7.8	1265
35	3 1	No.1 No.2	11"	2'-7	7'-0"	4	2	2	2	3	27	38	9.0	1704
40	3 2	No.1 No.2	11"	2'-10	7'-6"	4	2	2	2	4	29	43	10.7	2122
45	4 2 1	No.1 No.2 No.3	1'-2"	3'-7	9'-3"	5	3	3	2	4	35	49	15.5	2621
50	4 2 1	No.1 No.2 No.3	1'-2"	3'-10	9'-9"	5	3	3	2	5	37	54	17.8	3281
55	4 4	No.1 No.3	1'-2"	4'-1"	10'-3"	5	4	4	2	5	41	59	20.3	3849

D bars: 5'-3", 2½" radius, 7'-6" long

½ number of A bars required as there are D bars.
Estimated quantities to be added to quantities already given on Standard Bridge sheets.
Sidewalk beam reinforcement placed similiar to Standard Bridge beam reinforcement.

SIDEWALK BEAM REINFORCEMENT FOR STANDARD TEE BEAM BRIDGES

STANDARD DETAIL-S212

DETAILS FOR 45° I BEAM BRIDGE

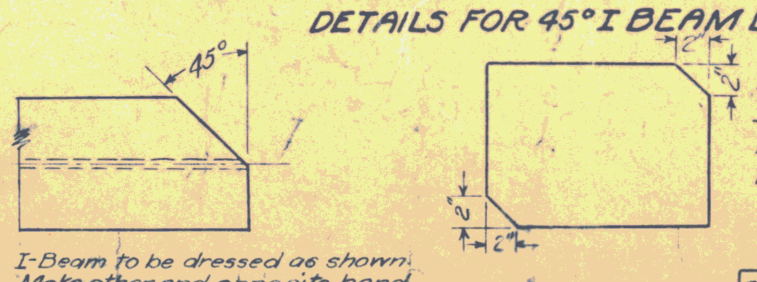

Plates under I-Beams must be cut as shown to fit.

I-Beam to be dressed as shown. Make other end opposite hand.

STANDARD DETAIL-S215

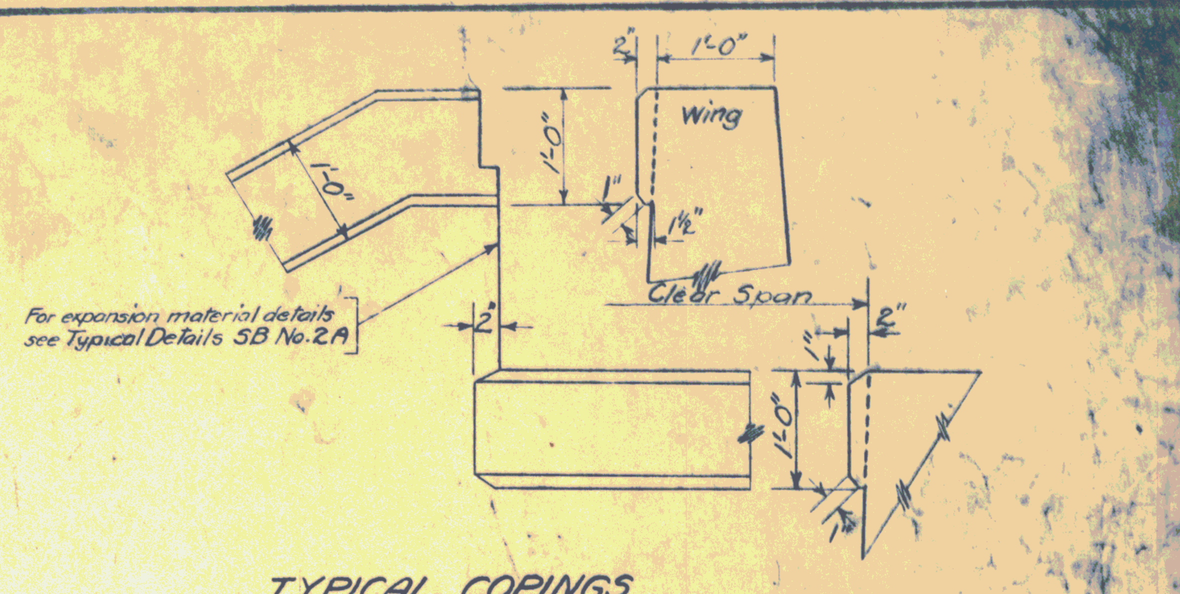

TYPICAL COPINGS

STANDARD DETAIL-S22[illegible]

GENERAL NOTES

The following notes shall govern the structures and details to which they apply.

All work and materials shall conform to the Standard Road and Bridge Specifications of the Vermont Highway Department, 1929.

Any suitable structure excavation used by the contractor for any purpose other than for backfill or approach fill shall be replaced by an equivalent quantity of borrow by the contractor at his expense unless same is ordered wasted by the Engineer.

Piles shall be provided where foundation cannot be obtained within a reasonable depth. They shall be spaced not closer than 2'-6" c/c except as noted on plans or as directed by the Engineer. Where jetting is necessary, use Standard Detail S206.

Foundations on ledge should preferably be sloped toward the back of the footing about 1" per foot and footings shown on plans for other conditions may be revised at the direction of the Engineer.

All concrete for piers and gravity abutments shall be class B (1-2½-5) concrete unless otherwise noted or directed.

All concrete for reinforced abutments shall be class C (1-2-4) concrete unless otherwise noted or directed.

All concrete for Tee, I beam and Slab bridges, curbs and rails shall be class A (1-2-4) concrete and shall be paid for at the unit price for class A concrete.

All reinforcing steel for bridges and abutments shall be deformed bars, except as noted, and shall conform to the Standard Specifications for Billet Steel Concrete Reinforcement Bars, Structural or Intermediate Grade, of the American Society for Testing Materials, Serial Designation A15-14.

4" weep holes shall be provided in main abutment and wings spaced not further apart than 10'-0" c/c symmetrically about the ℄ of abutment, pitched 1" per foot upward from front to back. The lower end of the weep hole shall be 2'-6" above footing. The cost of work and materials for weep holes shall be included in the unit price bid for concrete.

The premoulded bituminous expansion material between superstructure and substructure at expansion and fixed end, shall be included and paid for in price bid for class A (1-2-4) concrete.

All work and materials for expansion device to be included in and paid for at the unit price bid for reinforcing steel for Tee beam bridges.

Concrete chairs for supporting reinforcing steel shall be made to the dimensions shown on the Standard Chair sheet.

Structural steel for I beam bridges shall be painted as specified under Item 36 A-B, Phamphlet I of the Specifications unless otherwise directed.

All exposed edges shall be chamfered. The face dimension of chamfer to be 1".

Where pipes, existing or required, pass through abutments, they shall be of the materials and in the locations as directed by the Engineer. The cost of all work and materials for such work shall be included in and paid for under the unit bid for abutment concrete. Where pipes are to be carried by the superstructure, they shall be supported as and where directed by the Engineer and the cost of all work and materials shall be paid for at the unit price for superstructure reinforcing steel.

In case lighting is required for superstructure, special details will be furnished. Cost of work and materials for such lighting shall be paid for under a separate lump sum bid, unless otherwise provided for.

STANDARD DETAIL-S221

TYPICAL DETAILS
TEE AND I BEAM BRIDGES AND ABUTMENTS
STATE OF VERMONT
DEPARTMENT OF HIGHWAYS

CORRECT: A. D. Bishop. BRIDGE ENGINEER

Corrected to March 1, 1929

Surveyed by
Designed by
Drawn by M.L.W. & R.F.T. & C.A.L.
Traced by C.D. Lord
Checked by

RICHFORD-SUTTON BHF 0814(1)
REFERENCE PLANS
FOR INFORMATIONAL PURPOSES ONLY
SHEET 26 OF 49

STATE OF VERMONT — DEPARTMENT OF HIGHWAYS

EAST RICHFORD — ~~F.A.P.~~ F.R.P. NO. 208

Form Eng. 1A — Earthwork Sheet No. 1 OF 1 — DEC 31 1928

Date JAN. 5, 1929 — Revised by PATTERSON — Checked by — Compiled by

% Grade	STATION	ELEVATION On Grades	ELEVATION On V Curves	Correction for Vertical Curve	DIST.	TOTAL EXCAVATION AREA	TOTAL EXCAVATION CUBIC YARDS	BALANCE AND ROCK EXCAVATION AREA	BALANCE AND ROCK EXCAVATION CUBIC YARDS	EMBANKMENT AREA	EMBANKMENT CUBIC YARDS
0.0% (100' V.C.)	257+75	148.69	148.69	0.0							
	258+00	148.69	148.74	+0.05							
	+25	148.69	148.90	+0.21							
	+50	148.69	149.18	+0.49							
	+60	148.95	149.31	+0.36							
	+75	149.35	149.56	+0.21							
	+95	149.87	149.94	+0.07							
	259+00	150.00	150.05	+0.05							
	+16	150.42	150.43	+0.01							
	+25	150.66	150.66	0.0							
	+33	150.87	150.87								
	+38	151.00	151.00								
	+40					0	49.2				
	+50	151.32	151.32			266					
	+60	151.58	151.58		10	315	107.4				
	+70	151.84	151.84		10	771	201.1				
	+80	152.10	152.10		10	923	313.7				
+2.63%	+90	152.36	152.36	0.0	10	1032	362.0				
	260+00	152.62	152.62	0.0	20		493.3				
	+10	152.88	152.87	-0.01		300	66.6				
	+22	153.26	153.24	-0.02		0					
	+25	153.27	153.23	-0.04							
	+30	153.40	153.35	-0.05							
	+35.4	153.54	153.48	-0.06							
	+52.3	153.98	153.86	-0.12							
	+60	154.18	154.03	-0.15							
	+66	154.33	154.15	-0.18							
	+85	154.83	154.55	-0.28							
200' V.C.	+90	154.99	154.67	-0.32							
	261+00	155.12	154.86	-0.26							
	+15	155.32	155.14	-0.18							
	+21	155.40	155.25	-0.15							
+1.33%	+25	155.45	155.31	-0.14							
	+27	155.48	155.35	-0.13							
	+30	155.79	155.74	-0.05							
	+51.5	155.81	155.76	-0.05							
	+60	155.92	155.89	-0.03							
	+80	156.19	156.19	-0.0							
	CARRY FORWARD						1593.3				
	COLUMN FOOTINGS										

STATE OF VERMONT — DEPARTMENT OF HIGHWAYS

Form Eng. 1A — F. A. P. NO. — Earthwork Sheet No. 192

Date — Revised by — Checked by — Compiled by

% Grade	STATION	ELEVATION On Grades	ELEVATION On V Curves	Correction for Vertical Curve	DIST.	TOTAL EXCAVATION AREA	TOTAL EXCAVATION CUBIC YARDS	BALANCE AND ROCK EXCAVATION AREA	BALANCE AND ROCK EXCAVATION CUBIC YARDS	EMBANKMENT AREA	EMBANKMENT CUBIC YARDS
+1.33% (100' V.C.)	261+90	156.32	156.32	-0.0							
	+91.7					47.3					
	262+00	156.45									
					28.3		28.5.4				
	+20	156.72				72.3					
					20		28.7				
	+40	157.99				6.6					
	CARRY FORWARD						1907.4				
	COLUMN FOOTINGS										

TOTAL FILL 1907
FACTOR 1.15 x 1907 = 2190 CU. YDS.
BORROW

RICHFORD-SUTTON BHF 0814(1)
REFERENCE PLANS
FOR INFORMATIONAL PURPOSES ONLY
SHEET 27 OF 49

STATE OF VERMONT — DEPARTMENT OF HIGHWAYS

RICHFORD — ~~F.A.P.~~ F.R.B. NO. 20 B

Form Eng. 3A — Summary Sheet No. 1 of 1 — Aug 21, 1928

APPROXIMATE SUMMARY OF QUANTITIES

QUANTITIES	UNIT	ITEMS	ITEM NUMBER
	Cu. Yds.	Common Excavation	10
	Cu. Yds.	Solid Rock Excavation	10
	Cu. Yds.	Borrow	11
2190	Cu. Yds.	Common Excavation including Borrow	10–11
	Cu. Yds.	Sub-base of Field or Quarry Stone	12A
	Cu. Yds.	Sub-base of Crushed Rock or Slag	12B
	Cu. Yds.	Sub-base of Gravel	12C
	Cu. Yds.	Telford Base Course	12D
	Cu. Yds.	Sub-base of Sand	12E
1,150	Cu. Yds.	Structure Excavation	15
	Cu. Yds.	Broken Stone Base Course	16
23	Cu. Yds.	Gravel Surface Course	20A
	Cu. Yds.	Gravel Surface Course (Crushed)	20B
	Cu. Yds.	Gravel Shoulders	21
	Cu. Yds.	Bituminous Macadam Surface Course	22A
	Gals.	Oil Asphalt	22B
	Gals.	Refined Tar	22C
	Cu. Yds.	One Course Cement Concrete Pavement Type A	23 A
	Cu. Yds.	One Course Cement Concrete Pavement Type B	23B
	Sq. Yds.	Bituminous Concrete Surface Course	
	Sq. Yds.	Single Bituminous Surface Treatment	25
	Sq. Yds.	Double Bituminous Surface Treatment	26
	Sq. Yds.	Natural Rock Asphalt Surface	27
198	Cu. Yds.	Concrete Class ~~AA (1-2-4)~~ B (1-2-4) (for abutments and piers)	34AA
133	Cu. Yds.	Concrete Class A (1-2-4) (For floor and beams)	34A
349	Cu. Yds.	Concrete Class B (1-2½-5) (For Abuts. & Piers)	34B
30,910	lbs.	Reinforcing Steel	35
	lbs.	Structural Steel	36A
1	Lump Sum	Steel Superstructure (207,000 lbs.)	36B
	Sq. Yds.	Waterproofing Membrane	37
	Cu. Yds.	Cement Rubble Masonry	43
	Cu. Yds.	Dry Rubble Masonry	44
	Sq. Yds.	Repointing Masonry	45
	Lin. Ft.	6″ Vitrified Clay Pipe	50B
	Lin. Ft.	8″ Vitrified Clay Pipe	50C
	Lin. Ft.	10″ Vitrified Clay Pipe	50D
	Lin. Ft.	12″ Vitrified Clay Pipe	50E

APPROXIMATE SUMMARY OF QUANTITIES

QUANTITIES	UNIT	ITEMS	ITEM NUMBER
	Lin. Ft.	12″ Pipe	
	Lin. Ft.	15″ Pipe	
	Lin. Ft.	16″ Pipe	
	Lin. Ft.	18″ Pipe	
	Lin. Ft.	24″ Pipe	
	Lin. Ft.	30″ Pipe	
	Lin. Ft.	36″ Pipe	
	Lin. Ft.	12″ Pipe	
	Lin. Ft.	15″ Pipe	
	Lin. Ft.	16″ Pipe	
	Lin. Ft.	18″ Pipe	
	Lin. Ft.	24″ Pipe	
	Lin. Ft.	30″ Pipe	
	Lin. Ft.	36″ Pipe	
	Lin. Ft.	Relaying Pipe Culverts	51
	Lump Sum	Temporary Bridge	55
	Lin. Ft.	Timber Piling	56
	M. B. M.	Timber Grillage	57
	Cu. Yds.	Stone Fill	60
	Cu. Yds.	Plain Rip Rap	61
	Cu. Yds.	Rip Rap for Bank Protection	62
	Lin. Ft.	Tile Underdrain	65
	Lin. Ft.	Wood Guard Rail	66
72	Lin. Ft.	Cable Guard Rail	67
	Cu. Yds.	Plain Rubble Paving	70A
	Cu. Yds.	Grouted Rubble Paving	70B
	Sq. Yds.	Plain Cement Concrete Gutter	73
	Sq. Yds.	Plain Cobble Gutter	74A
	Sq. Yds.	Grouted Cobble Gutter	74B
	Each	Leaching Basins	75
	Each	Catch Basins	76
	Each	Changing Elevations of Manholes and Catch Basins	77
	Each	Drop Inlet Grates	78

DETAILED SUMMARY OF QUANTITIES

STATE OF VERMONT — DEPARTMENT OF HIGHWAYS

F. A. P. NO.

Form Eng. 3A — Summary Sheet No. 192

Type of Road

STATIONS FROM	STATIONS TO			EQUATIONS +	EQUATIONS −

Length of Project, 254.0 ft. = 0.048 Miles.

Total length of Bridge, 205.25 ft. = 0.038 Miles.

RICHFORD-SUTTON BHF 0814(1)
REFERENCE PLANS
FOR INFORMATIONAL PURPOSES ONLY
SHEET 28 OF 49

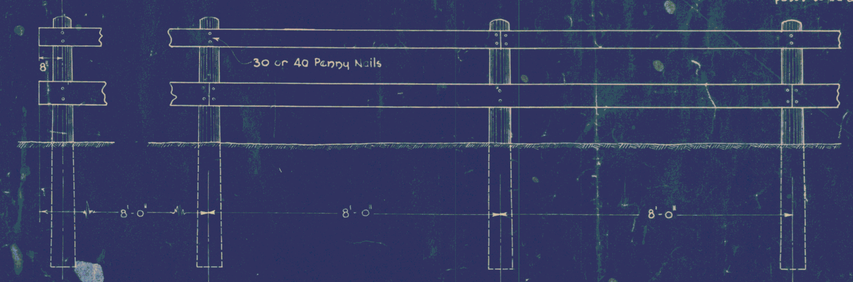

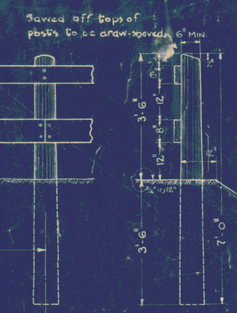

All posts shall be painted between ground line and bottom rail with two coats of an approved black paint.

The first and last post of every section of railing to be set back 1'-0" from the general line of railing

All posts shall be given a preservative treatment from the bottom to 6 above ground line. See Specifications + Pamphlet N, Item 66, Paragraph 66.3

WOOD GUARD RAIL
ITEM 66

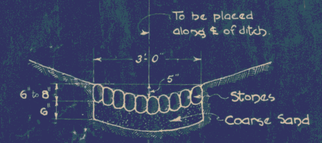

COBBLE GUTTER
ITEM 74A-8

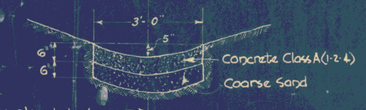

CONCRETE GUTTER
ITEM 73

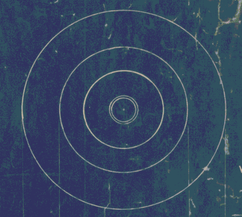

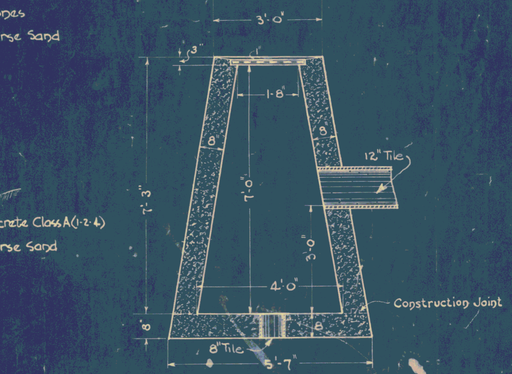

CONCRETE CATCH BASIN
ITEM 76B

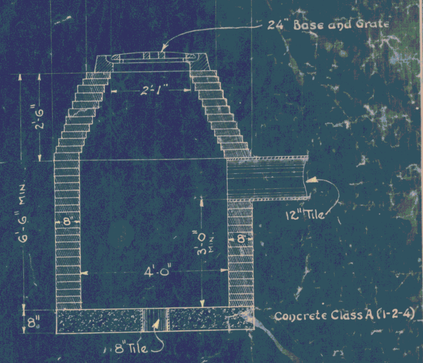

BRICK CATCH BASIN
ITEM 76A

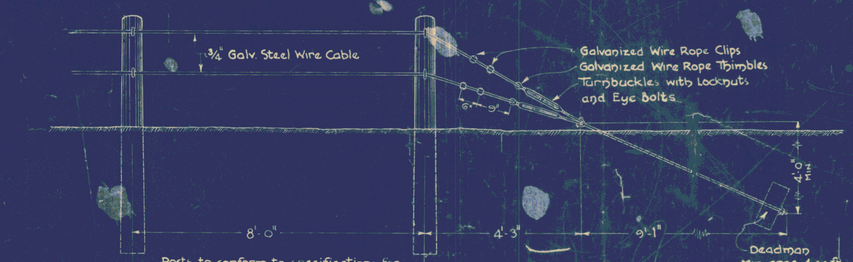

Posts to conform to specifications for Wood Guard Rail except that length shall be not less than 6'-8"

All posts to be painted between ground line and bottom cable with two coats of an approved black paint

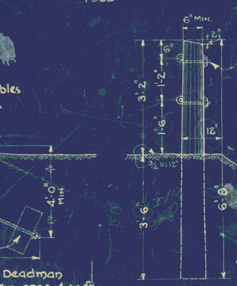

The tops of all posts to be cut on a plane parallel with grade of road.

Hook Bolt projections on back of posts to be sawed off after guard rail is in place

All posts to be given a preservative treatment as for Wood Guard Rail

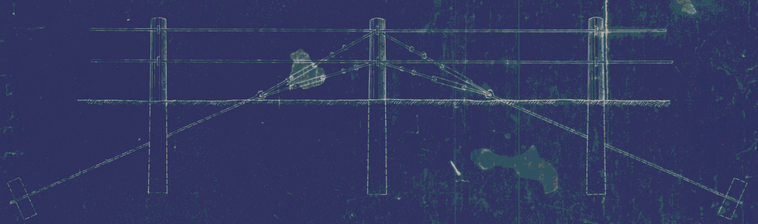

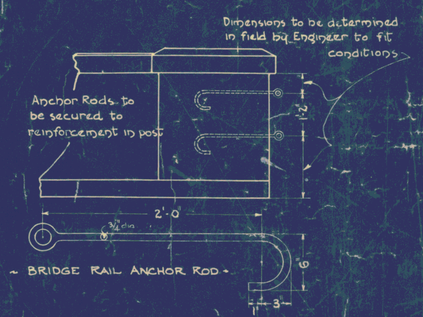

BRIDGE RAIL ANCHOR ROD

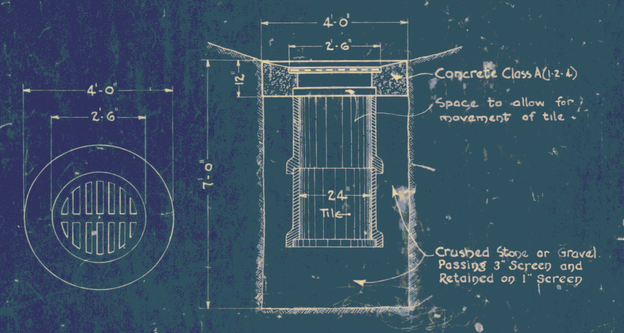

LEACHING BASIN
ITEM 75

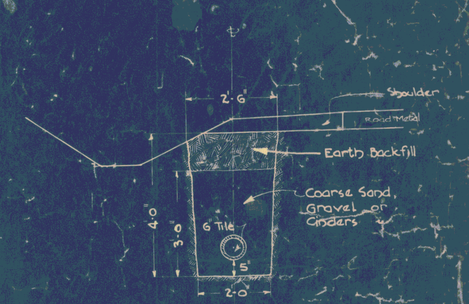

TILE UNDERDRAIN
ITEM 65

GALVANIZED TURNBUCKLES with LOCKNUTS and EYE BOLTS

GALVANIZED ANCHOR ROD

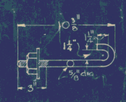

GALVANIZED HOOK BOLT

All cable and guard rail fittings to be galvanized

	Number Required	Remarks
Galv. Steel Wire Cable		
Galv. Wire Rope Clips		
Galv. Wire Rope Thimbles		
Galv. Hook Bolts		
Galv. Turnbuckles + Locknuts		
Galv. Clevis Anchor Rods		
Wood Posts		
Deadman		

CABLE GUARD RAIL
ITEM 67

STANDARD STRUCTURES
DEPARTMENT OF HIGHWAYS
STATE OF VERMONT

Designed by H.E. Sargent Mar. 192
Drawn by A.W. Coleman Mar. 192
Traced by A.W. Coleman Mar. 192
Checked by A.R.C. & W.E.W. Mar. 192
Examined by A.J. Flanders Mar. 192

APPROVED MARCH 15, 1928
H.E. Sargent
CHIEF ENGINEER

SUBMITTED BY ORDER OF THE STATE HIGHWAY BOARD
S.B. Boles
COMMISSIONER OF HIGHWAYS
SIGNED MARCH 15, 1928

SERIES S No. 19

RICHFORD-SUTTON BHF 0814(1)
REFERENCE PLANS
FOR INFORMATIONAL PURPOSES ONLY
SHEET 29 OF 49

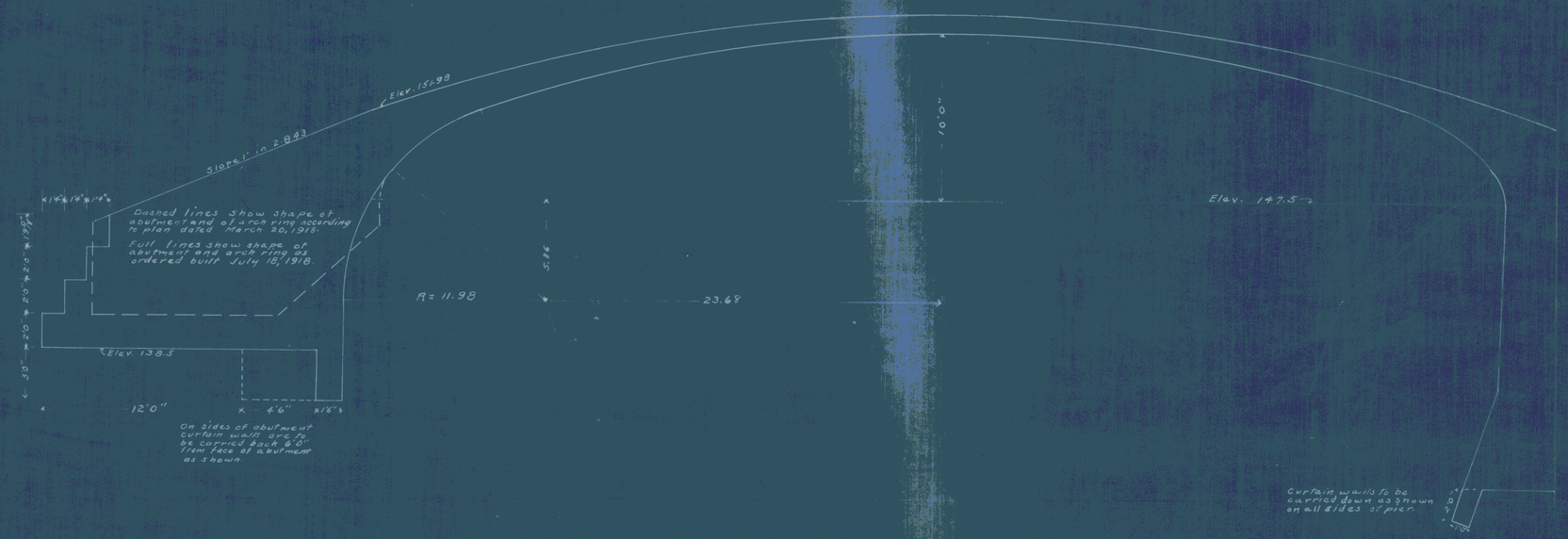

INTERNATIONAL BRIDGE near E. RICHFORD, VT.
Half Section showing changes in arch ring and abutment on American end and curtain walls under pier and under abutment on American end.
Scale 1" = 4'
APPROVED July 19, 1918
H. F. Merrill
STATE ENGINEER of VERMONT.

Ms R-8

RICHFORD-SUTTON BHF 0814(1)
REFERENCE PLANS
FOR INFORMATIONAL PURPOSES ONLY
SHEET 30 OF 49

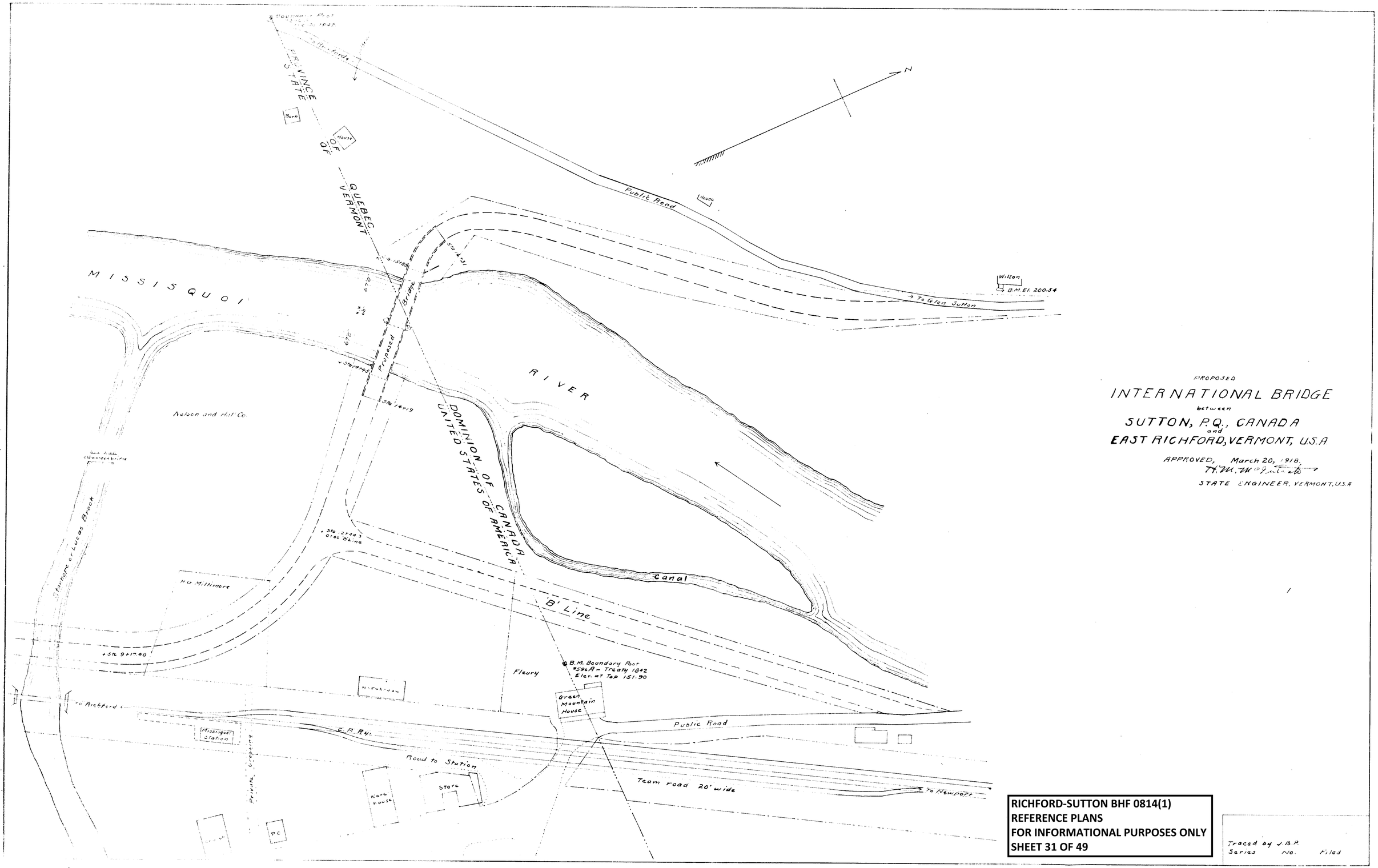

RICHFORD-SUTTON BHF 0814(1)
REFERENCE PLANS
FOR INFORMATIONAL PURPOSES ONLY
SHEET 31 OF 49

Traced by J.B.P.
Series No. Filed

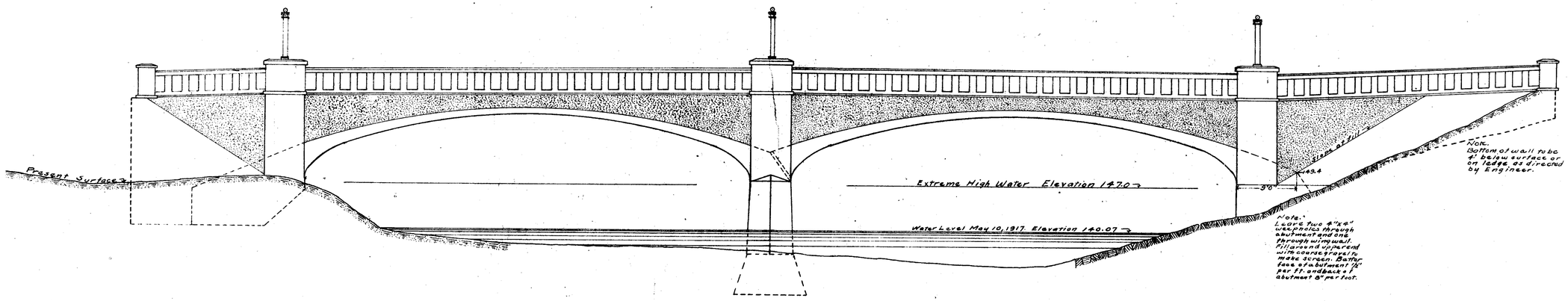

ELEVATION. Scale 1"=8'.

PROPOSED

INTERNATIONAL BRIDGE

between

SUTTON, P.Q., CANADA
and
EAST RICHFORD, VERMONT, U.S.A.

APPROVED, March 20, 1918.

H. M. McPherson

STATE ENGINEER, VERMONT, U.S.A.

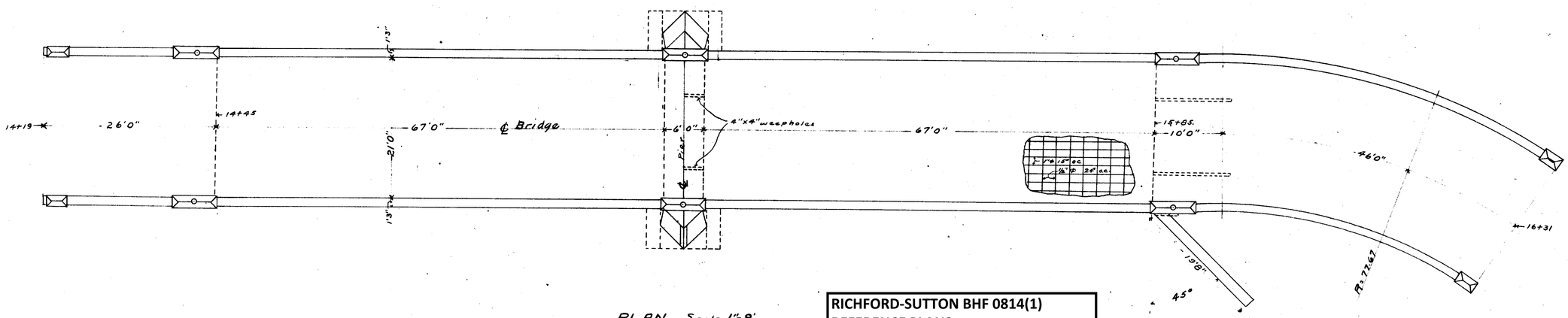

PLAN. Scale 1"=8'.

RICHFORD-SUTTON BHF 0814(1)
REFERENCE PLANS
FOR INFORMATIONAL PURPOSES ONLY
SHEET 32 OF 49

Designed by L.E.D
Checked by J.B.P.
Traced by J.B.P.
Series No. Filed

RICHFORD-SUTTON BHF 0814(1)
REFERENCE PLANS
FOR INFORMATIONAL PURPOSES ONLY
SHEET 33 OF 49

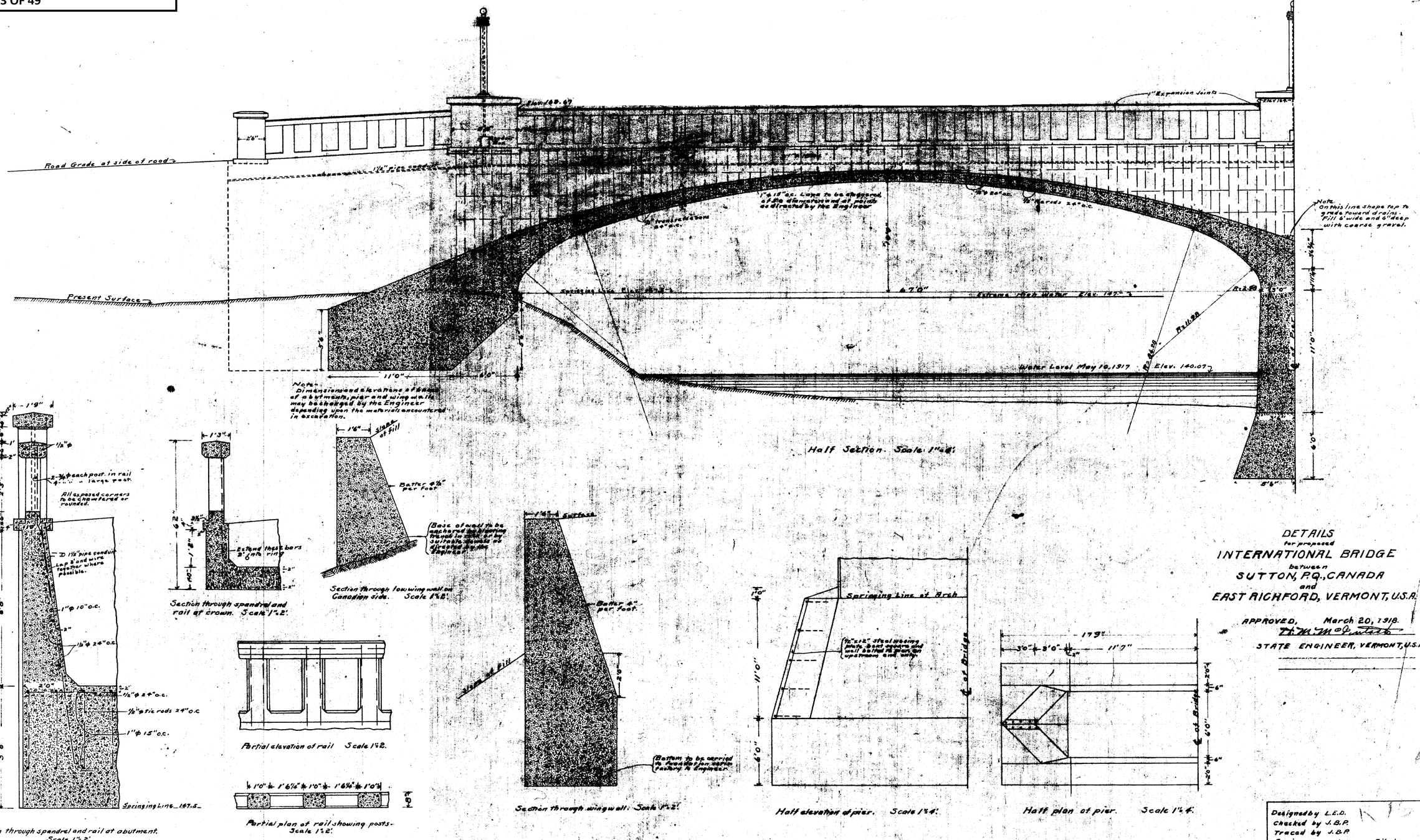

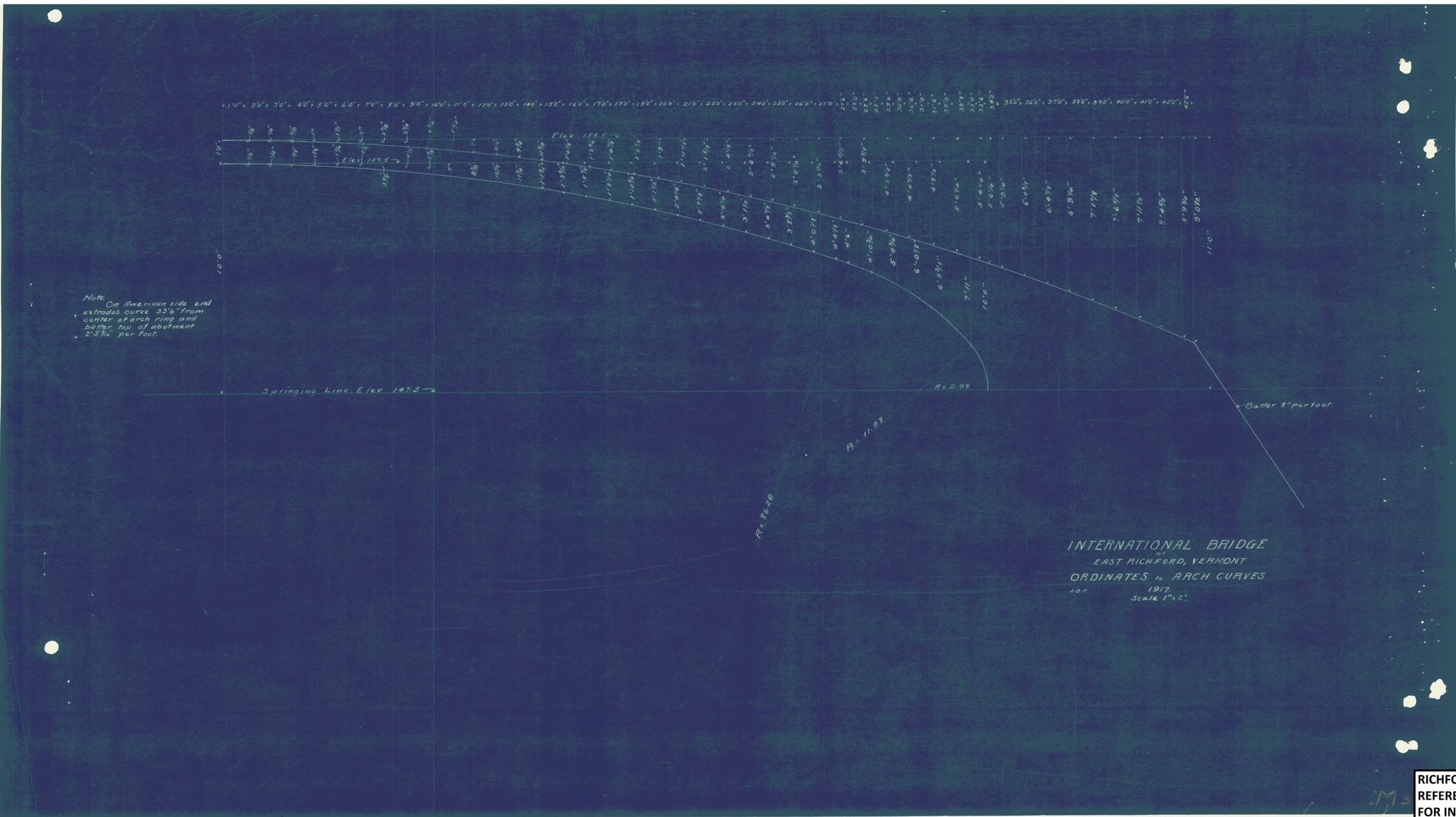

RICHFORD-SUTTON BHF 0814(1)
REFERENCE PLANS
FOR INFORMATIONAL PURPOSES ONLY
SHEET 34 OF 49

INDEX OF SHEETS

1. Title Sheet
2. Quantity Sheet
3,4 Superstructure Details
5. Reinforcing Steel Schedule
6. E-3 (6-7-77)R
7. E-7 (9-19-73)R
8. E-7A (6-8-77)R
9. G-1 (1-17-78)R
10. G-1d (9-12-77)R
11. G-2a (12-19-72)R
12. SCB-D1-75 (4-3-78)R
13. SCB-D7-71 (12-15-76)R

RECORD PLANS-MATERIAL SUPPLIERS

CONTRACTOR-WINTERSET INC., LYNDONVILLE, VT.
CONTRACT DATED-14 AUGUST 1978
CONSTRUCTION BEGAN-24 JULY 1978
SUSPENDED-3 NOVEMBER 1978
RESUMED-22 MAY 1979
COMPLETED-21 SEPTEMBER 1979 ACCEPTED-27 SEPTEMBER 1979
RESIDENT ENGINEER-MARK G. HUTCHINS RECORD PLANS-PAUL E. SINGLETON
BITUMINOUS CONCRETE PAVEMENT-PIKE INDUSTRIES INC., WILLISTON, VT.
CONCRETE-ANDERSON, SWANTON, VT.
STRUCTURAL STEEL-VERMONT STRUCTURAL STEEL CORP., BURLINGTON, VT.
REINFORCING STEEL-K-ROSS BUILDING SUPPLY CENTER, LEBANON, N.H. STEEL GRID FLOORING-GREULICH INC, PITTSBURG, PA.
PAINT-CADILAC PAINT & VARNISH CO., PITTSBURG, PA. WATER REPELLENT-SONNEBORN BUILDING PRODUCTS, MASPETH, N.Y.
SHEET MEMBRANE WATERPROOFING-ROYSTON LABORATORIES INC., PITTSBURG, PA.
GUARD RAIL, ANCHORS FOR GUARD RAIL-LAFAYETTE-SHELDON INC., ESSEX JCT., VT.
GRANULAR BACKFILL FOR STRUCTURES, EPOXY BONDING COMPOUND-WINTERSET, INC., LYNDONVILLE, VT.

NOTE: ANY FURTHER INFORMATION CONCERNING FINAL QUANTITIES, AMOUNTS OR OTHER DETAILS RELATIVE TO THIS PROJECT MAY BE FOUND IN EITHER THE FIELD BOOKS OR THE ESTIMATE FILE.

STATE OF VERMONT
DEPARTMENT OF HIGHWAYS

LOCATION MAP
(TRACED FROM COUNTY MAP)

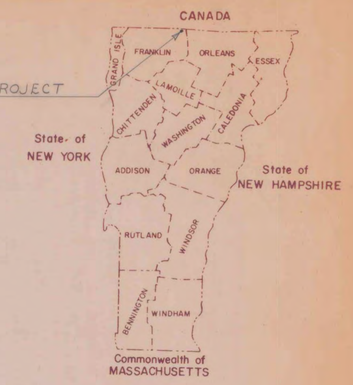

PROPOSED IMPROVEMENT

BRIDGE PROJECT
TOWN OF RICHFORD
COUNTY OF FRANKLIN
ROUTE No: VT. 105-A BRIDGE No: 3

PROJECT LOCATION: BETWEEN SUTTON PQ. CANADA & EAST RICHFORD VT. U.S.A.

PROJECT DESCRIPTION: REMOVE EXISTING CONCRETE DECK AND REPLACE WITH CONCRETE FILLED STEEL GRID DECK, CLEAN AND PAINT EXISTING SUPERSTRUCTURE STEEL AND NECESSARY APPROACH WORK.

LENGTH OF STRUCTURE:	206.25	FEET
LENGTH OF PARTICIPATION ROADWAY:	—	FEET
LENGTH OF NON-PARTICIPATION ROADWAY:	—	FEET
LENGTH OF PROJECT:	206.25	FEET

GENERAL NOTES:

1. Existing paint, rust, or dirt in area of any new welding shall be removed prior to welding.
2. All Structural Steel shall be cleaned by sand-blasting and painted according to Section 513.
3. The deck shall be concrete filled, ASTM-A588 Steel Grid Flooring meeting the requirements of Section 509 of the Standard Specifications.
4. One way traffic shall be maintained under Section 637, Maintenance of Traffic for Bridge Projects.
5. Partial Removal of Structure, Section 202, shall consist of removing the existing concrete deck, curbs, and drains. between the backs of abutments.
6. See Special Provisions For Additional Details of Steel Grid Flooring and Maintenance of Traffic.
7. Any required Type III Barricades shall be as detailed on the E-7A std Sheet.

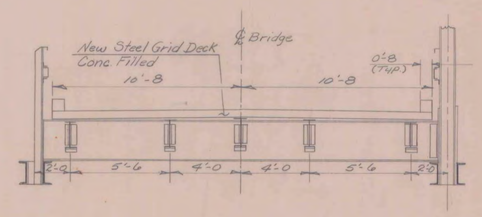

TYPICAL BRIDGE SECTION
MAIN SPAN
Scale: 1/4" = 1'-0

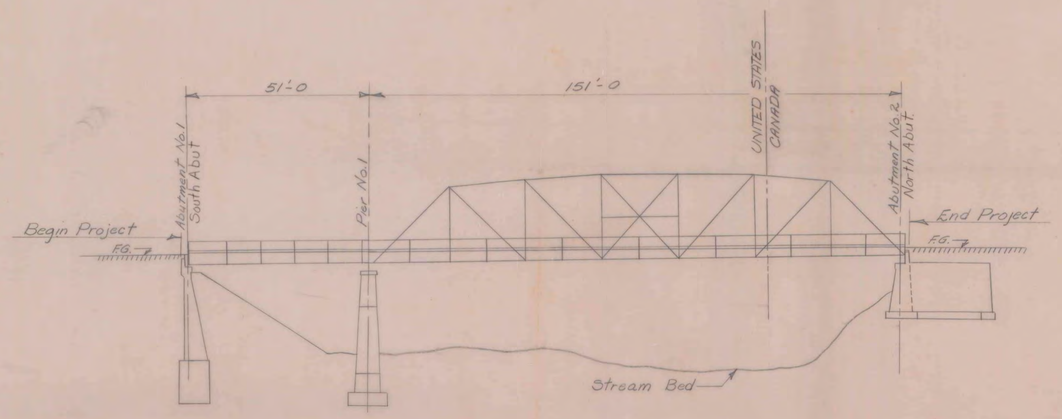

ELEVATION
Scale: 1" = 20'-0

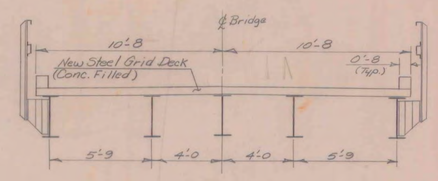

TYPICAL BRIDGE SECTION
APPROACH SPAN
Scale: 1/4" = 1'-0

BUILT AS DESIGNED

CONVENTIONAL SIGNS

COUNTY LINE
TOWN LINE
LIMITS OF ACCESS
POINT OF ACCESS
FENCE LINE
STONE WALL
TRAVELED WAY
GUARD RAIL
RAILROAD
SURVEY LINE
CULVERT
POWER POLE
TELEPHONE POLE
TREES
F.A. CONST. IDENTIFICATION SIGNS
PROPERTY LINE
R.O.W. TAKING LINE
SLOPE RIGHTS
TOP OF CUT
TOE OF SLOPE

SUBMITTED BY ORDER OF THE STATE HIGHWAY BOARD
APPROVED A. J. Gage CHIEF ENGINEER DATE 5/14/79

RICHFORD-SUTTON BHF 0814(1)
REFERENCE PLANS
FOR INFORMATIONAL PURPOSES ONLY
SHEET 35 OF 49

PROJECT No. RICHFORD 105A-BR3
SHEET 1 OF SHEETS 11

EARTHWORK

V.C.	% GRD	STATION	GRADES ELEVATION ON TAN.	GRADES ELEVATION ON V.C.	CORR. V.C.	DIST.	AREA	CU. YDS.	AREA	CU. YDS.	AREA	CU. YDS.	AREA	CU. YDS.

BRIDGE QUANTITY SHEET

STATE OF VERMONT
DEPARTMENT OF HIGHWAYS
BRIDGE DIVISION

NO.	ITEM	UNIT		QUANTITY BREAKDOWN SUPER-STRUCT.		ABUT.		PIER		ROADWAY							TOTAL	FINAL
202.30	PARTIAL REMOVAL OF STRUCTURE	EA.		1													1	1
202.35	REMOVAL OF EXISTING CONCRETE OR MASONRY (EST.)	C.Y.				5		1									6	5.87
203.15	Common Excavation (Est.)	C.Y.								10							10	32
204.25	STRUCTURE EXCAVATION	C.Y.				10											10	10.2
204.30	GRANULAR BACKFILL FOR STRUCT.	C.Y.				10											10	20.4
406.25	BITUMINOUS CONCRETE PAVEMENT	TON		55						25							80	79.4
501.19	CONCRETE CLASS AA	C.Y.		42		5		1									48	0
506.93	STRUCTURAL STEEL	LB.		3520		410											3930	3347
507.15	REINFORCING STEEL	LB.		2580		750											3330	3330
509.25	STEEL GRID FLOORING (A-588)	S.F.		4352													4352	4355
513.35	PAINTING, BLAST CLEANING (207,000 LBS.)	L.S.		1													1	1
514.10	WATER REPELLENT	GAL.		7		1											8	8
615.30	EPOXY BONDING COMPOUND	GAL.				1		1									2	2
519.20	SHEET MEMBRANE WATERPROOFING	S.Y.		453													453	453
601.4102	17" x 13" CGMPA T=.064"	L.F.				12											12	12
637.10	MAINTENANCE OF TRAFFIC FOR BRIDGE PROJECTS	L.S.		1													1	1
621.38	Guard Rail, Heavy Duty Steel Beam with Wood Posts, Type II	L.F.								353							353	277.6
621.70	Anchor for Steel Beam Guard Rail with Steel, or Wood Posts at Openings	EA.								4							4	4
501.19	CONCRETE CL. AA (MOD.)	C.Y.															0	46.50
202.40	REMOVAL AND DISPOSAL OF EXISTING GUARD RAIL	L.F.	(C.O.#1)														0	263

RICHFORD-SUTTON BHF 0814(1)
REFERENCE PLANS
FOR INFORMATIONAL PURPOSES ONLY
SHEET 36 OF 49

BRIDGE (S) AT STATION (S) _____
LOCATION (S) RICHFORD

Prepared by: J. WEAVER
Checked by: G.H. DuBray
SUPERVISOR: W. TRIPP

RICHFORD
BR ____ OF ____

PROJECT NO. 105A-BR3
SHEET NO. 2 OF 11

BR-1

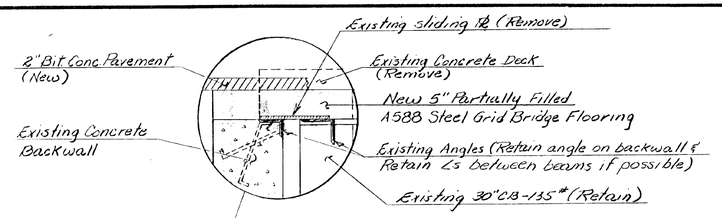

Existing Truss Members:

Bottom Chord Exterior Panels - 2 [s 12"x25#
Bottom Chord Interior Panels - 2 [s 12"x40#
Vertical Members - 9" CB x 38#
Diagonals Exterior Panels - 9" CB x 43#
Diagonals Interior Panels - 9" CB x 29#
Diagonals Mid-Span Panel - 2 Ls 3½"x3½"x⅜"

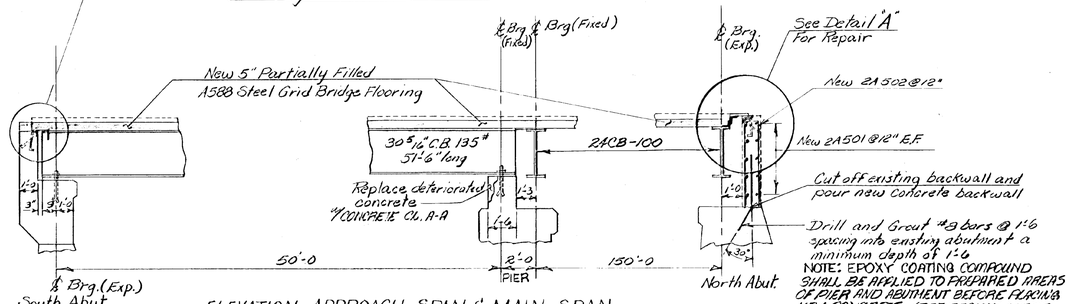

NOTE: EPOXY COATING COMPOUND SHALL BE APPLIED TO PREPARED AREAS OF PIER AND ABUTMENT BEFORE PLACING NEW CONCRETE. (SEE SECTION 615 OF SPECIFICATIONS FOR FURTHER DETAILS.

ELEVATION APPROACH SPAN & MAIN SPAN

Scale: ¼" = 1'-0

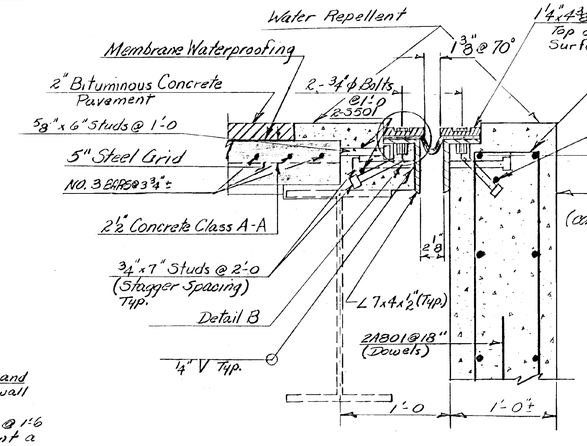

DETAIL "A"

Scale: 1½" = 1'-0

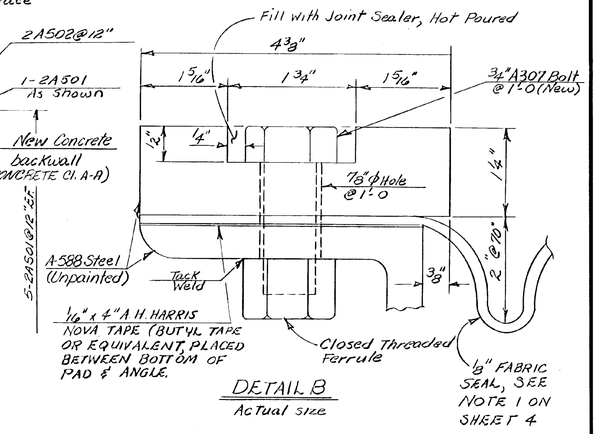

DETAIL B

Actual size

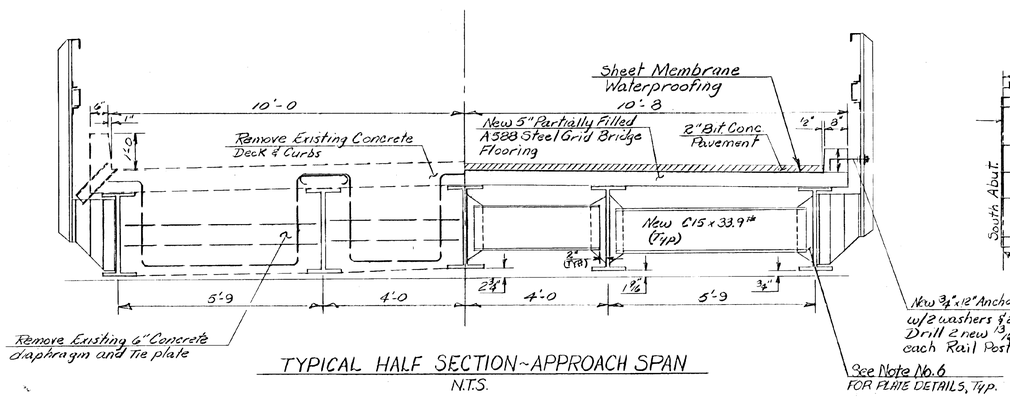

TYPICAL HALF SECTION ~ APPROACH SPAN

N.T.S.

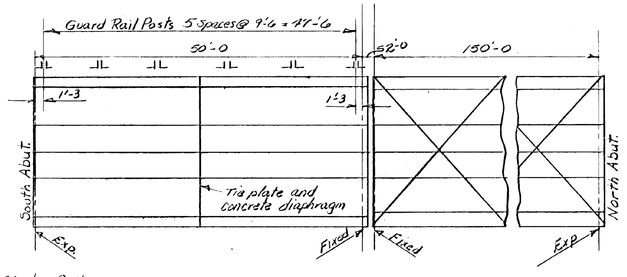

FLOOR PLAN

Scale: 3/32" = 1'-0

NOTE:

Any reinforcing steel required in the Steel Grid Floor System shall be furnished and placed subsidiary to Item 509.25 AND SHALL BE GRADE 40.

Note:

CROSS SLOPE OF NEW DECK SHALL CONFORM WITH EXISTING BRIDGE. FABRICATOR SHALL CAMBER THE STEEL GRID FLOORING AS NECESSARY TO CONFORM TO EXISTING CROSS SLOPE CONFIGURATION.

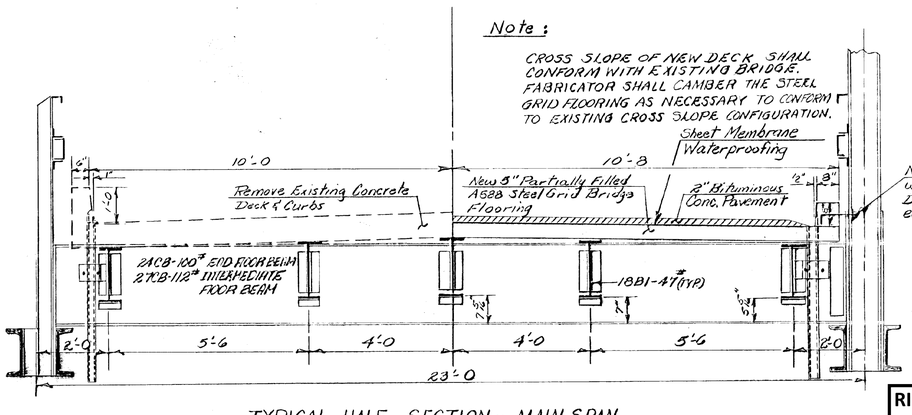

TYPICAL HALF SECTION ~ MAIN SPAN

N.T.S.

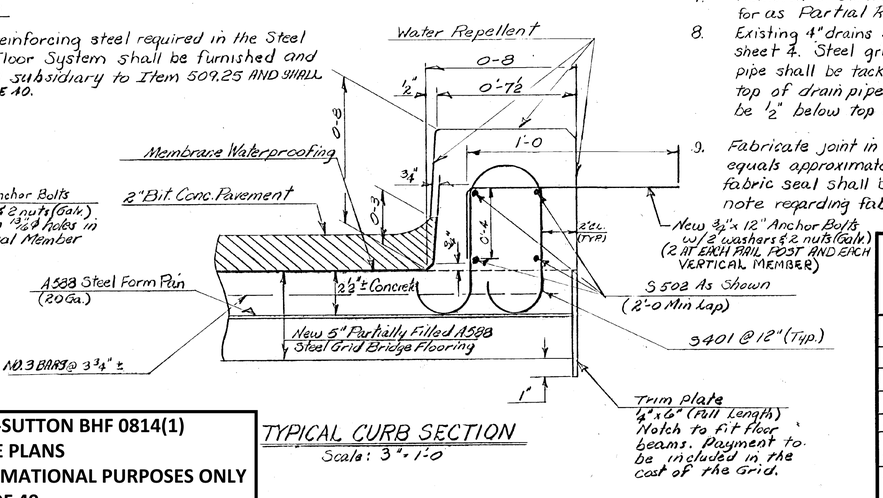

TYPICAL CURB SECTION

Scale: 3" = 1'-0

NOTES

1. The steel grid flooring shall be steel I-Beam construction 5" in depth with a na 20 guage form pan provided at mid-depth between the I-Beams equivalent to Reliance 5" Weldlock Type "C" or Greulich 5" 4 way open steel bridge flooring. All material shall conform to ASTM A-588 Structural Steel.
2. The superstructure concrete shall be Concrete Class AA modified to yield a compressive strength of 4000 psi in seven days. The cement used for the superstructure concrete shall meet the requirements of AASHTO M85, Type III high early strength portland cement.
3. Exposed areas of new concrete curbs and north abutment backwall shall be treated with Water Repellent as detailed
4. The cost of furnishing and placing of the superstructure concrete shall be included in the price bid for Concrete Class AA
5. All Structural Steel shall be A-36 or A-588 (Painted) unless otherwise noted.
6. All connections for new Steel diaphragms shall be field welded. For further details see Std. SCB-D7-71 Detail D. New steel diaphragms shall be located at mid span of approach span.
7. Removal of existing concrete deck, curbs and diaphragm shall be paid for as Partial Removal of Structure.
8. Existing 4" drains shall be reused on main span only as shown on sheet 4. Steel grid shall be cut to receive drain pipes and drain pipe shall be tack welded to grid. Curb shall be blocked out at top of drain pipe similar to existing curb. Top of drain pipe shall be ½" below top of steel grid. Taper Bit Concrete at drain inlet.
9. Fabricate joint in two sections and field weld at ℄ bridge. Cross slope equals approximately 7/32" / Ft ⊥ to ℄. Entire joint assembly including fabric seal shall be paid for as Structural Steel, Item 506.93. See note regarding fabric seal on sheet 4.

RICHFORD-SUTTON BHF 0814(1)
REFERENCE PLANS
FOR INFORMATIONAL PURPOSES ONLY
SHEET 37 OF 49

STATE OF VERMONT
DEPARTMENT OF HIGHWAYS

TOWN OF RICHFORD	Bridge No. 3
HIGHWAY NO. VT. 105-A	Log Sta. 94+36
	Surv. Sta.
VT. 105-A OVER MISSISQUOI RIVER	
SUPERSTRUCTURE DETAILS	
Designed by D.E. LATHROP	Drawn by D.E. LATHROP
Checked by G.H. DuBray date 4-21-77	Bridge Design Supervisor W. TRIPP date
PROJECT RICHFORD	PROJECT NO. 105A-BR3
Bridge Sheet No.	Sheet 3 of 11

BR-9

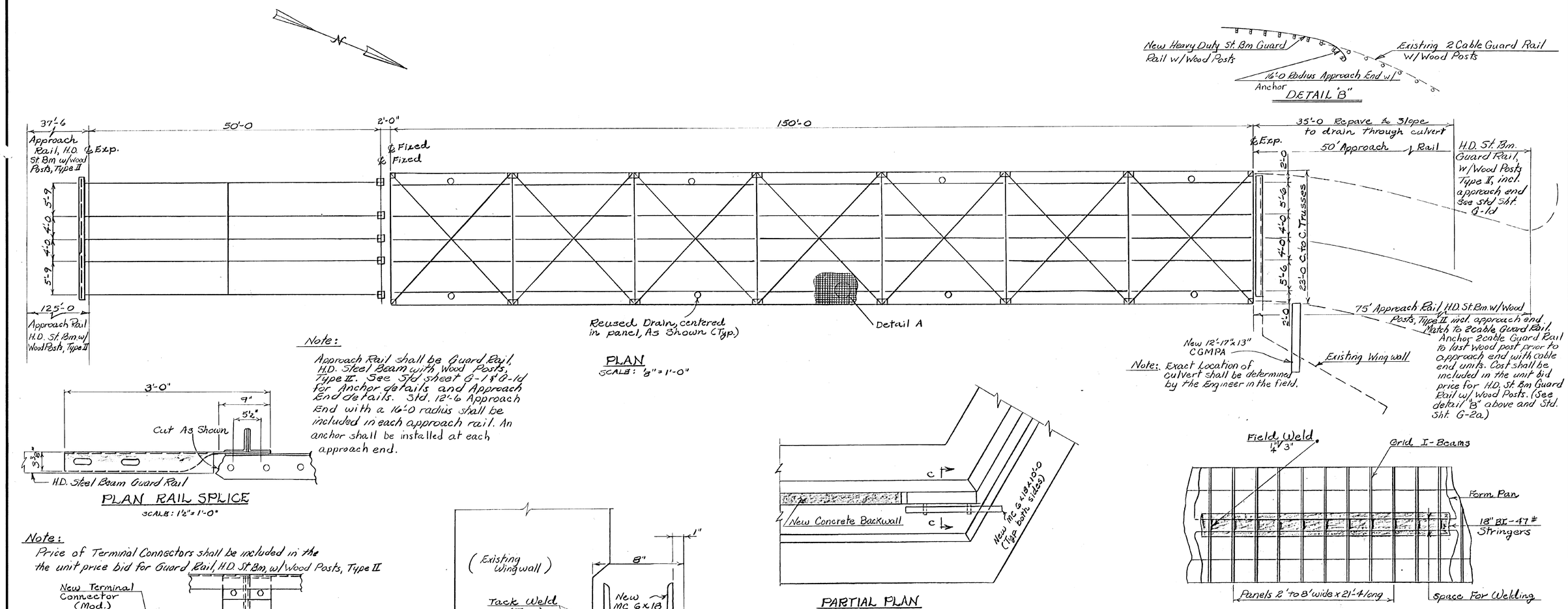

Note: Exact Location of culvert shall be determined by the Engineer in the field.

PLAN
SCALE: 1/8" = 1'-0"

Note:

Approach Rail shall be Guard Rail, H.D. Steel Beam with Wood Posts, Type II. See Std sheet G-1 & G-1d for Anchor details and Approach End details. Std. 12'-6 Approach End with a 16'-0 radius shall be included in each approach rail. An anchor shall be installed at each approach end.

PLAN RAIL SPLICE
SCALE: 1½" = 1'-0"

Note:

Price of Terminal Connectors shall be included in the the unit price bid for Guard Rail, H.D. St. Bm, w/ Wood Posts, Type II

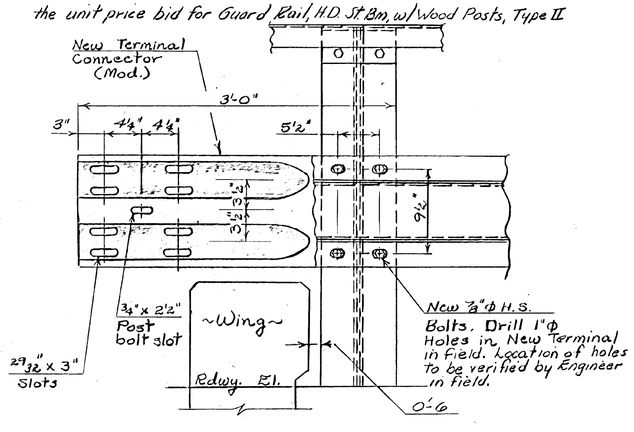

ELEVATION RAIL SPLICE
SCALE: 1½" = 1'-0"

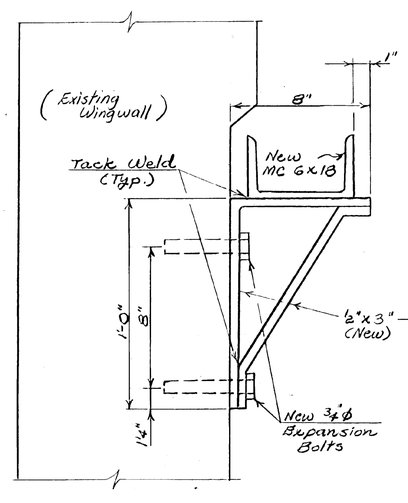

SECTION C-C
SCALE: 3" = 1'-0"

PARTIAL PLAN
NORTH ABUTMENT
SCALE: ¼" = 1'-0"

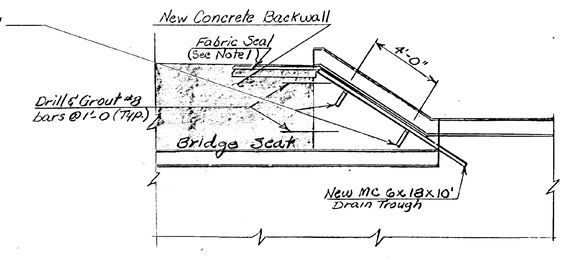

PARTIAL ELEVATION
NORTH ABUTMENT
SCALE: ¼" = 1'-0"

DETAIL A
N.T.S.

NOTES

1. The fabric seal shall be continuous and shall be a preformed fabric material as specified in Section 707.13. Fabric shall be installed only after all retaining hardware for joint is complete and in place. The completed joint shall extend a minimum of 0'-6 beyond each fascia making a total length of 22'-4.
2. Alternate (similar type) joint system may be submitted for approval (Req'd movement equals 2").
3. All excavation required on approaches for purpose of regrading or reshaping shall be paid for as Common Excavation.
4. Top flanges of floorbeams and stringers shall be sandblasted and painted after removing existing concrete deck before grid is placed.

RICHFORD-SUTTON BHF 0814(1)
REFERENCE PLANS
FOR INFORMATIONAL PURPOSES ONLY
SHEET 38 OF 49

STATE OF VERMONT
DEPARTMENT OF HIGHWAYS

TOWN OF RICHFORD	Bridge No. 3
HIGHWAY NO. VT. 105-A	Log Sta. 94+36
	Surv. Sta.
VT. 105-A OVER MISSISQUOI RIVER	
SUPERSTRUCTURE & MISC. DETAILS	
Designed by D. LATHROP	Drawn by J. WEAVER
Checked by G. H. DuBray date 4-21-77	Bridge Design Supervisor W. TRIPP date
PROJECT RICHFORD	PROJECT NO. 105A-BR3
Bridge Sheet No.	Sheet 4 of 11

BR-9

ITEM	NO. PIECES	SIZE	LENGTH	MARK	TYPE	A	B	C	D	E	F	G	H	J	K	R	O
			SUPERSTRUCTURE														
1																	
2																	
3	410	4	2'-6	S401	S8	0-5	0-8	0-4	0-8			0-5	0-2	0-3			
4																	
5	2	5	21'-0	S501	Str												
6	56	5	30'-11	S502	Str												
7																	
8																	
9																	
10			ABUTMENT	NO. 2	(NORTH	ABUTMENT)											
11																	
12																	
13	11	5	21'-1	2A501	Str.												
14																	
15	22	5	10'-4	2A502	17		4'-9	0-10	4'-9		Cut to fit as required						
16																	
17	22	8	4'-6	2AB01	19		1'-6	3'-0	/				0-9		1-3½		
18																	
19																	
20																	
21																	
22																	
23																	
24																	
25																	
26																	
27																	
28																	
29																	
30																	
31																	
32																	
33																	
34																	
35																	
36																	
37																	
38																	
39																	
40																	
41																	
42																	
43																	
44																	
45																	
46																	
47																	
48																	
49																	
50																	
51																	
52																	
53																	
54																	
55																	
56																	
57																	
58																	
59																	
60																	
61																	
62																	
63																	
64																	
65																	
66																	
67																	
68																	
69																	
70																	
71																	
72																	
73																	
74																	
75																	
76																	
77																	
78																	
79																	
80																	

ITEM	NO. PIECES	SIZE	LENGTH	MARK	TYPE	A	B	C	D	E	F	G	H	J	K	R	O
81																	
82																	
83																	
84																	
85																	
86																	
87																	
88																	
89																	
90																	
91																	
92																	
93																	
94																	
95																	
96																	
97																	
98																	
99																	
100																	
101																	
102																	
103																	
104																	
105																	
106																	
107																	
108																	
109																	
110																	
111																	
112																	
113																	
114																	
115																	
116																	
117																	
118																	
119																	
120																	
121																	
122																	
123																	
124																	
125																	
126																	
127																	
128																	
129																	
130																	
131																	
132																	
133																	
134																	
135																	
136																	
137																	
138																	
139																	
140																	
141																	
142																	
143																	
144																	
145																	
146																	
147																	
148																	
149																	
150																	
151																	
152																	
153																	
154																	
155																	
156																	
157																	
158																	
159																	
160																	

ITEM	NO. PIECES	SIZE	LENGTH	MARK	TYPE	A	B	C	D	E	F	G	H	J	K	R	O
161																	
162																	
163																	
164																	
165																	
166																	
167																	
168																	
169																	
170																	
171																	
172																	
173																	
174																	
175																	
176																	
177																	
178																	
179																	
180																	

ASTM STANDARD REINFORCING BARS

BAR SIZE DESIGNATION	WEIGHT POUNDS PER FOOT	NOMINAL DIMENSIONS ROUND SECTION		
		DIAMETER INCHES	CROSS SECTIONAL AREA SQ. INCHES	PERIMETER INCHES
#3	.376	.375	.11	1.178
#4	.668	.500	.20	1.571
#5	1.043	.625	.31	1.963
#6	1.502	.750	.44	2.356
#7	2.044	.875	.60	2.749
#8	2.670	1.000	.79	3.142
#9	3.400	1.128	1.00	3.544
#10	4.303	1.270	1.27	3.990
#11	5.313	1.410	1.56	4.430
#14	7.65	1.693	2.25	5.32
#18	13.60	2.257	4.00	7.09

TYPICAL BAR BENDS

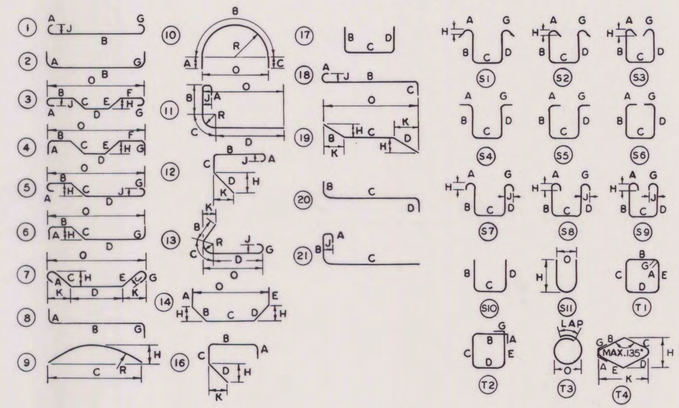

RICHFORD-SUTTON BHF 0814(1)
REFERENCE PLANS
FOR INFORMATIONAL PURPOSES ONLY
SHEET 39 OF 49

NOTES

1. UNLESS OTHERWISE DESIGNATED, ALL BAR REINFORCEMENT FOR CONCRETE IN SIZES UP TO AND INCLUDING NO. 18 SHALL CONFORM TO THE REQUIREMENTS OF THE "SPECIFICATIONS FOR DEFORMED BILLET-STEEL BARS FOR CONCRETE REINFORCEMENT," AASHTO M 31 (ASTM A 615), GRADE 40.
2. FOR TYPICAL BENDING DETAILS, RECOMMENDED PIN DIAMETER "D" OF BENDS AND HOOKS AND OTHER STANDARD PRACTICE SEE CURRENT CONCRETE REINFORCING STEEL INSTITUTE "MANUAL OF STANDARD PRACTICE."
3. BARS WHICH REQUIRE MORE ACCURATE BENDING THAN STANDARD PRACTICES SHOULD HAVE LIMITS INDICATED.
4. ALL DIMENSIONS ARE OUT TO OUT OF BAR EXCEPT "A" AND "G" ON STANDARD 180° AND 135° HOOKS.
5. "J" DIMENSION ON 180° HOOKS TO BE SHOWN ONLY WHERE NECESSARY TO RESTRICT HOOK SIZE, OTHERWISE STANDARD HOOKS ARE TO BE USED.
6. "H" DIMENSION ON STIRRUPS TO BE SHOWN ONLY WHEN NECESSARY TO MAINTAIN CLEARANCES.
7. WHERE SLOPE DIFFERS FROM 45° DIMENSIONS "H" AND "K" MUST BE SHOWN.

✳ DENOTES ONE EXTRA BAR ADDED FOR TESTING PURPOSES.

REV. NO.	MADE BY	DATE	DESCRIPTION
1	J. WOOD	8/11/75	A.A.S.H.O. CHANGED TO A.A.S.H.T.O. AND GRADE 40 CHANGED TO GRADE 60.

STATE OF VERMONT
DEPARTMENT OF HIGHWAYS

TOWN OF RICHFORD	BRIDGE NO. 3
	LOG STA. 94+36
HIGHWAY NO. VT. 105-A	SURV. STA.
VT. 105-A OVER MISSISQUOI RIVER	
REINFORCING STEEL SCHEDULE	
DESIGNED BY D. LATHROP	DRAWN BY D. LATHROP
CHECKED BY G.H. DuBray DATE 4-21-77	BRIDGE DESIGN SUPERVISOR W. TRIPP DATE
PROJECT RICHFORD	PROJECT NO. 105A-BR3
BRIDGE SHEET NO.	SHEET 5 OF 11

BR 6

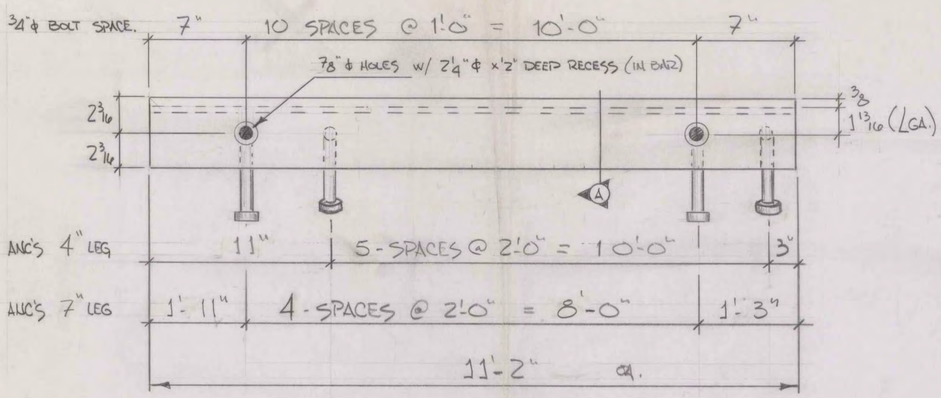

EXP JOINT 4-REQ'D AS SHOWN (NO PAINT)

TOTAL LENGTH OF EXP JOINT = 22'-4"
TWO SEC'S REQ'D EA SIDE (FIELD WELD TOGETHER)

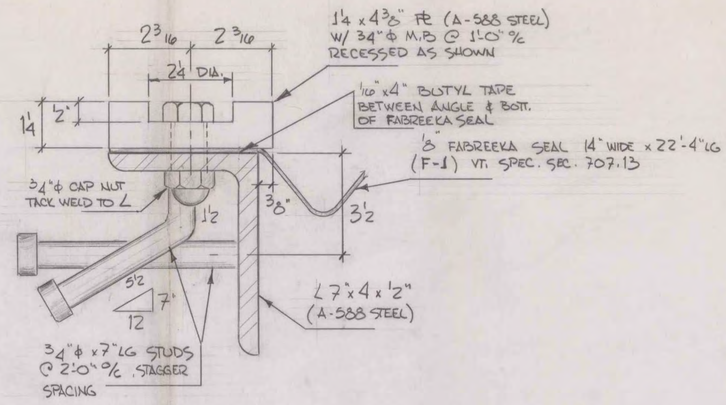

SECTION A

NO PAINT

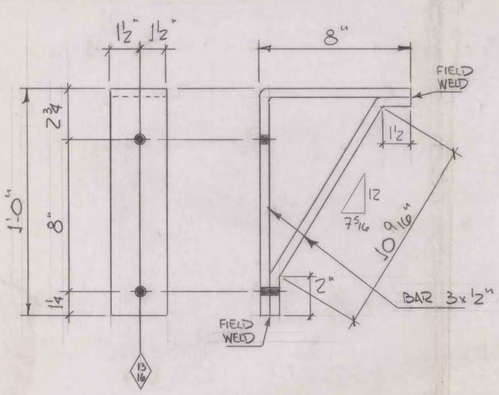

DRAIN TROUGH BRACKET (4-REQ'D)

FIELD WELD BRACKETS TO CH. DRAIN TROUGH

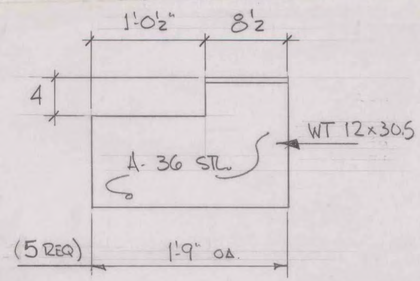

EXTENSION BRACKET

-50

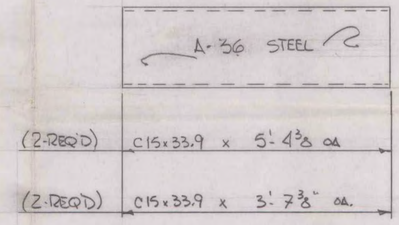

INTERMEDIATE DIAPHRAGMS

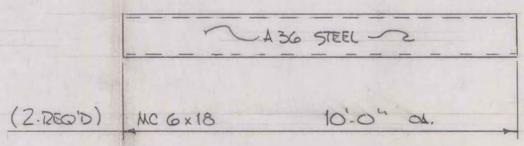

DRAIN TROUGH

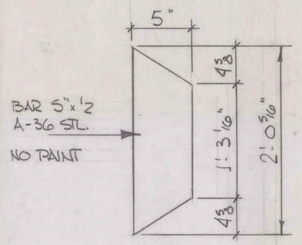

DIAPHRAGM PLATE (8-REQ'D)

RICHFORD-SUTTON BHF 0814(1)
REFERENCE PLANS
FOR INFORMATIONAL PURPOSES ONLY
SHEET 40 OF 49

BILL OF MATERIAL

	NO. PIECES	MARK	DESCRIPTION	LENGTH FT.	LENGTH IN.		WEIGHT	CLASSIFICATION FIT	CLASSIFICATION HOLES

JOB NO. SHEET NO.

A-36 U.N. BILL OF MATERIAL

	NO. PIECES	MARK	DESCRIPTION	LENGTH FT.	LENGTH IN.		WEIGHT	CLASSIFICATION FIT	CLASSIFICATION HOLES
			EXP. JOINT						
	4		PL 1 1/4 x 4 3/8 A-588	11	2"	BETH. S1442	830		
	4		∠ 7 x 4 x 1/2 A-588	11	2	do 799	799		
	48		3/4" ϕ STUDS	0	7	STK	48		
	44		3/4" ϕ H.H. CAP SCR'S	0	2		21		
	44		3/4 "ϕ-10 CAP NUT						
	ONE		14" x 1/8" FABREEKA	22	4	FABREEKA S1443	23		
	2		4" x 1/16" BUTYL TAPE	22	4	do	7		
							1728		
			INTERMEDIATE DIAPHRAGMS						
	2		C15 x 33.9	5	4 3/8	RES STK (A-588)			
	2		do	3	7 3/8	↑	609		
	8		BAR 5" x 1/2	2	0 5/16	STK	138		
							747		
			DRAIN TROUGH						
	2		MC 6 x 18	10	0	BETH. S1442 (A 36)	360		
	4		BAR 3 x 1/2	1	8	STK			
	4		do	1	2 1/16	↑	58		
	8		3/4" ϕ HILTI KWIK BOLT	0	5 1/2	FIELD MATERIAL	6		
							424		
			EXTENSION BK.						
	5	-50	WT 12 x 30.5 (W 24 x 61)	1	9	STK.	267		
							3166		

VERMONT STRUCTURAL STEEL CORPORATION
BURLINGTON, VERMONT

PRINT AND REVISION RECORD

DATE	FOR	NO.	REV. #	BY	REVISION
4-21	APPD	5			
9-28	REVISED STRUCT	6			
11-28	STRUCT	2			
12-5	do	2			

PROJECT RICHFORD BRIDGE
LOCATION VT 105-A OVER MISSISQUI RIVER
CUSTOMER WINTERSET INC.
ARCHITECT VT. DEPT. OF HIGHWAYS
HOLES AS NOTED DRAWN BY STACK
BOLTS CHECKED BY
PAINT BASIC LEAD SILICO CHROMATE DATE 9-18-78
JOB NO. 78-3218 SHEET NO.

⚠ THIS SHEET INTENTIONALLY LEFT BLANK

REVISION	DATE	BY	DESCRIPTION
⚠	11/27/2017	VAOT	DELETED SHEETS

PROJECT NAME: RICHFORD-SUTTON, PQ
PROJECT NUMBER: BHF 0814(1)

FILE NAME: s10c222sup.dgn
PROJECT LEADER: C. CARLSON
DESIGNED BY: C. BURRALL

PLOT DATE: 22-NOV-2017
DRAWN BY: G. ROKES
CHECKED BY: J. LACROIX
SHEET 41 OF 49

△1 THIS SHEET INTENTIONALLY LEFT BLANK

REVISION	DATE	BY	DESCRIPTION
△1	11/27/2017	VAOT	DELETED SHEETS

PROJECT NAME: RICHFORD-SUTTON, PQ
PROJECT NUMBER: BHF 0814(1)

FILE NAME: s10c222sup.dgn
PROJECT LEADER: C. CARLSON
DESIGNED BY: C. BURRALL

PLOT DATE: 22-NOV-2017
DRAWN BY: G. ROKES
CHECKED BY: J. LACROIX
SHEET 42 OF 49

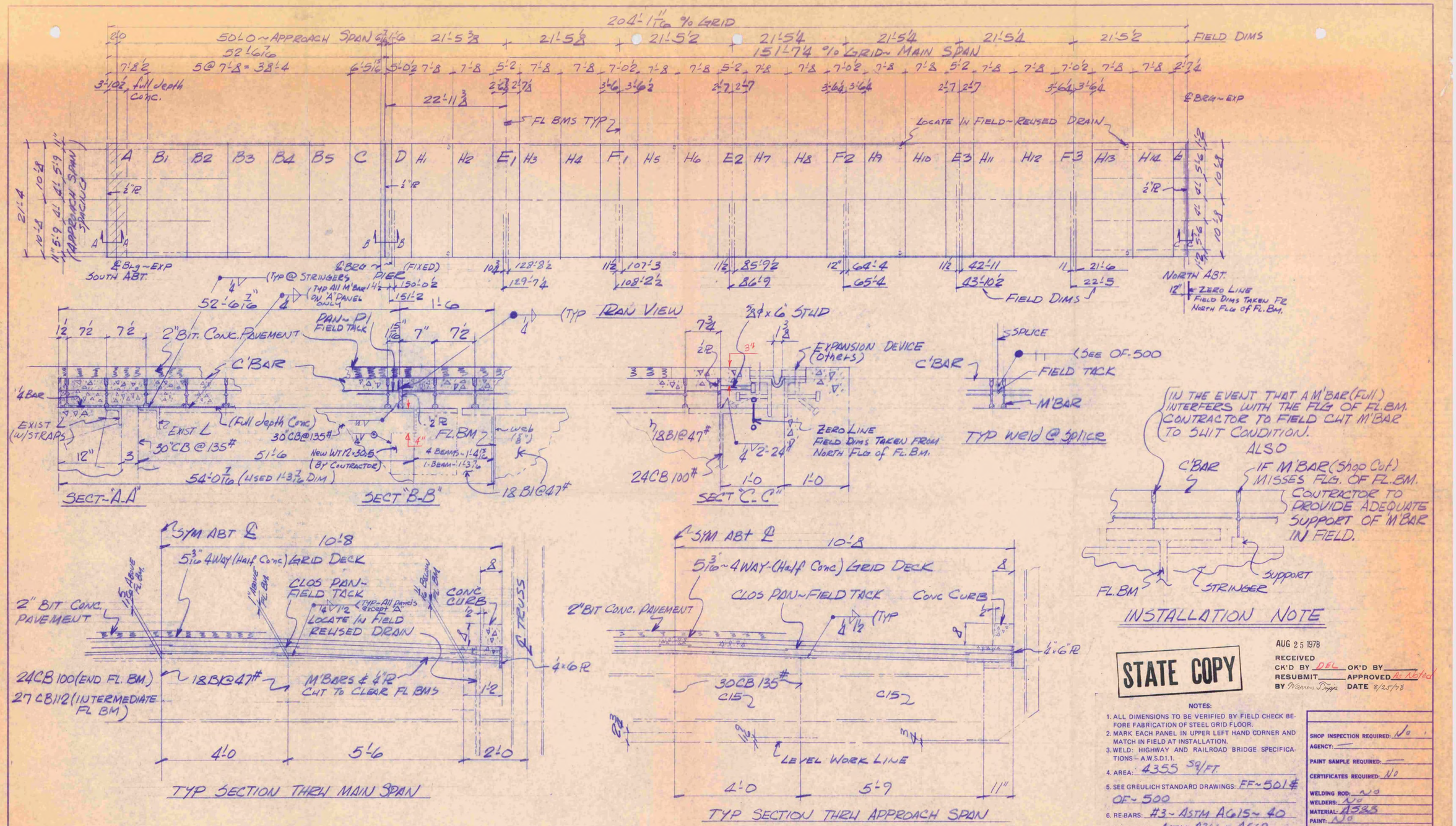

STATE COPY

AUG 25 1978
RECEIVED
CK'D BY DEL OK'D BY
RESUBMIT APPROVED As Noted
BY Warren Tripp DATE 8/25/78

NOTES:

1. ALL DIMENSIONS TO BE VERIFIED BY FIELD CHECK BEFORE FABRICATION OF STEEL GRID FLOOR.
2. MARK EACH PANEL IN UPPER LEFT HAND CORNER AND MATCH IN FIELD AT INSTALLATION.
3. WELD: HIGHWAY AND RAILROAD BRIDGE SPECIFICATIONS – A.W.S.D1.1.
4. AREA: 4355 SQ/FT.
5. SEE GREULICH STANDARD DRAWINGS: FF~501 & OF~500
6. RE-BARS: #3 ~ ASTM A615 ~ 40
7. FORM PANS: ASTM A366 or A569
8. SERRATIONS: NO
9. ⟵⟶ SYMBOL DENOTES DIRECTION OF MAIN BARS.

SHOP INSPECTION REQUIRED: No
AGENCY: —
PAINT SAMPLE REQUIRED: —
CERTIFICATES REQUIRED: No
WELDING ROD: No
WELDERS: No
MATERIAL: A588
PAINT: No
REFERENCE DRAWINGS

GREULICH, INC.
BRIDGE FLOORING SYSTEMS
1376 FREEPORT ROAD, PITTSBURGH, PENNSYLVANIA 15238 TELEPHONE: (412) 963-9800

DIVISION		
REVISIONS		DATE
111 Added wtr		8/21/78
MADE	DATE 7/18/78	SCALE
CHECK	DATE	APPROVED

FOR STATE OF VERMONT - D.O.H. (WINTERSET INC.)
TITLE Bridge No 3 ~ Richford, Franklin County - Route VT-105-A BETWEEN SUTTON PT CANADA & EAST RICHFORD VT (USA) ~ RAN VIEW
CUSTOMER NO. JOB NO. 78G25 DWG. NO. 10295-1
Sht 1 of 3

RICHFORD-SUTTON BHF 0814(1)
REFERENCE PLANS
FOR INFORMATIONAL PURPOSES ONLY
SHEET 43 OF 49

BRUNING 40-22 26634-1

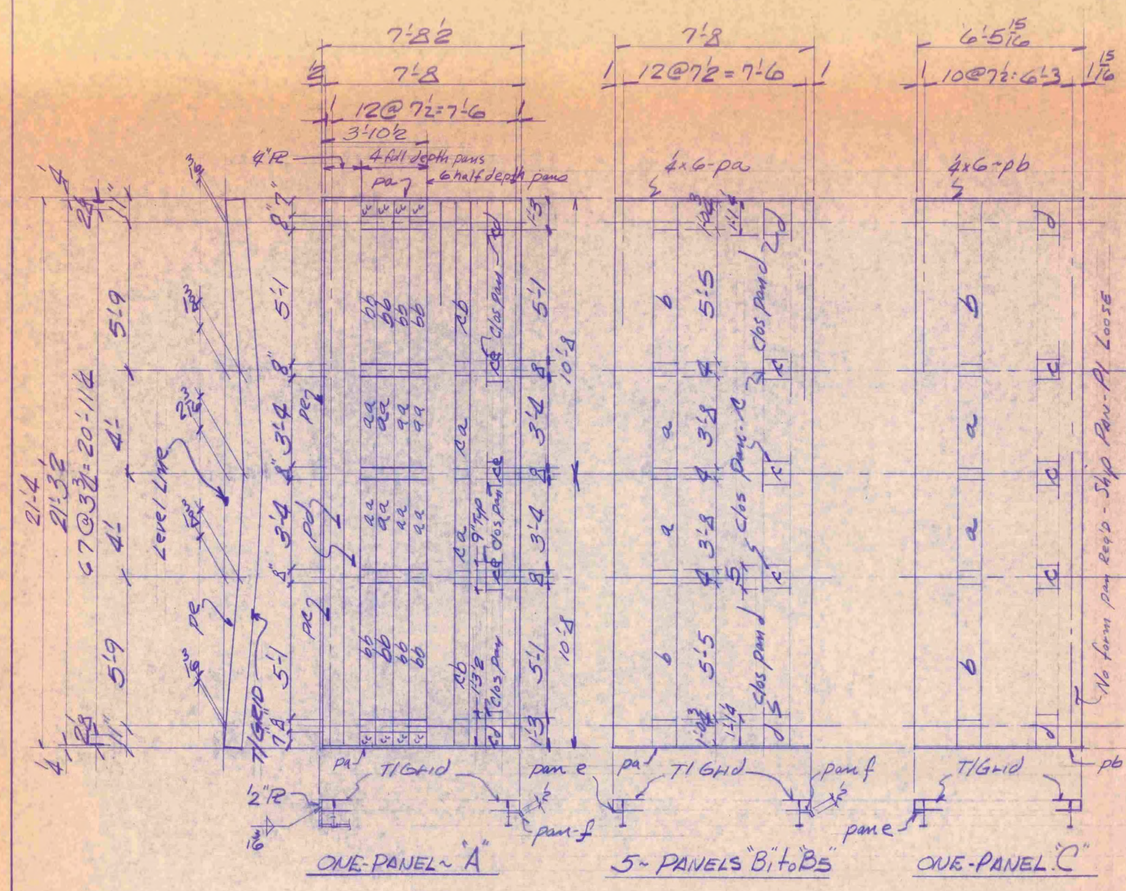

TYP CONTOUR OF M'BARS - APPROACH SPAN PANELS "A", "B" & "C" ONLY

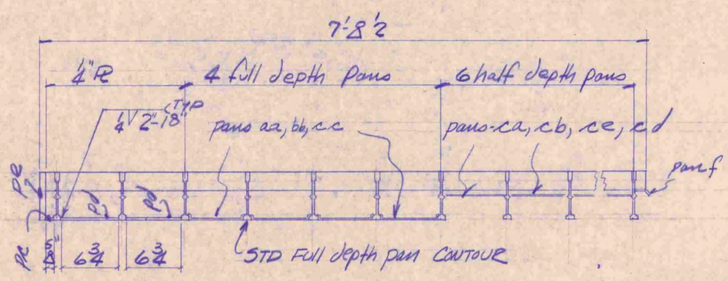

Typ SECTION THRU PANEL "A"

BILL OF MATERIAL

MK.	QTY.	DESCRIPTION	MATL.	REMARKS	WT.
A	1				
	13	M'BARS x 21'-3 1/2			
	68	C'BARS x 7'-8			
B	5	B1 to B5			
	65	M'BARS x 21'-3 1/2			
	340	C'BARS x 7'-8			
C	1				
	11	M'BARS x 21'-3 1/2			
	68	C'BARS x 6'-5 15/16			
pa	12	4 x 6 x 7'-8			
pb	2	4 x 6 x 6'-5 15/16			
pc	1	4 x 3/8 x 21'-3 1/2			
pd	2	4 x 6 1/4 x 21'-3 1/2			
pe	1	12 x 5 3/16 x 21'-4			
FORM & CLOS PANS					
a	140	20ga x 7 3/16" x 3'-8			
b	140	x 7 3/16" x 5'-5			
c	210	x 7 3/16" x 0'-5			
d	140	x 7 3/16" x 1'-0 3/4			
e	6	x 15/16" x 21'-3 1/2			
f	6	x 1 1/2" x 21'-3 1/2			
aa	8	x 7 3/8" x 3'-4 } full depth pans			
bb	8	x 7 3/8" x 5'-4 } full depth pans			
cc	8	x 7 3/8" x 0'-6 3/4 } full depth pans			
ca	12	x 7 3/8" x 3'-4			
cb	12	x 7 3/8" x 5'-1			
cd	12	x 7 3/8" x 1'-3 2			
ce	18	x 7/16" x 0'-9"			
D1	1	20ga x 1 3/8" x 21'-3 1/2 (Ship Loose Remove by this)			

STATE COPY

AUG 11 1978

RECEIVED
CK'D BY DEL OK'D BY
RESUBMIT APPROVED ✓
BY Warren Dixie DATE 8/14/78

SHOP INSPECTION REQUIRED: No
AGENCY: —
PAINT SAMPLE REQUIRED: —
CERTIFICATES REQUIRED: No
WELDING ROD: No
WELDERS: No
MATERIAL: ASTM
PAINT: No
REFERENCE DRAWINGS

GREULICH, INC.
BRIDGE FLOORING SYSTEMS
1376 FREEPORT ROAD, PITTSBURGH, PENNSYLVANIA 15238 TELEPHONE: (412) 963-9800

DIVISION
REVISIONS DATE
MADE 7/26/78 SCALE
CHECK DATE APPROVED
CUSTOMER NO.

FOR State Of Vermont ~ Dept Of Highways (Winterset Inc.)

TITLE Bridge No 3 ~ Richford, Franklin County ~ Route VT-105A, Approx Sutton Rd Crossing & East Richford Rd (US A.) ~ Approach Span Panels "A", "B" & "C"

JOB NO. 78425 DWG. NO. 10295-2

Sht 2 of 3

RICHFORD-SUTTON BHF 0814(1)
REFERENCE PLANS
FOR INFORMATIONAL PURPOSES ONLY
SHEET 44 OF 49

BRUNING 40-22 2663A-1

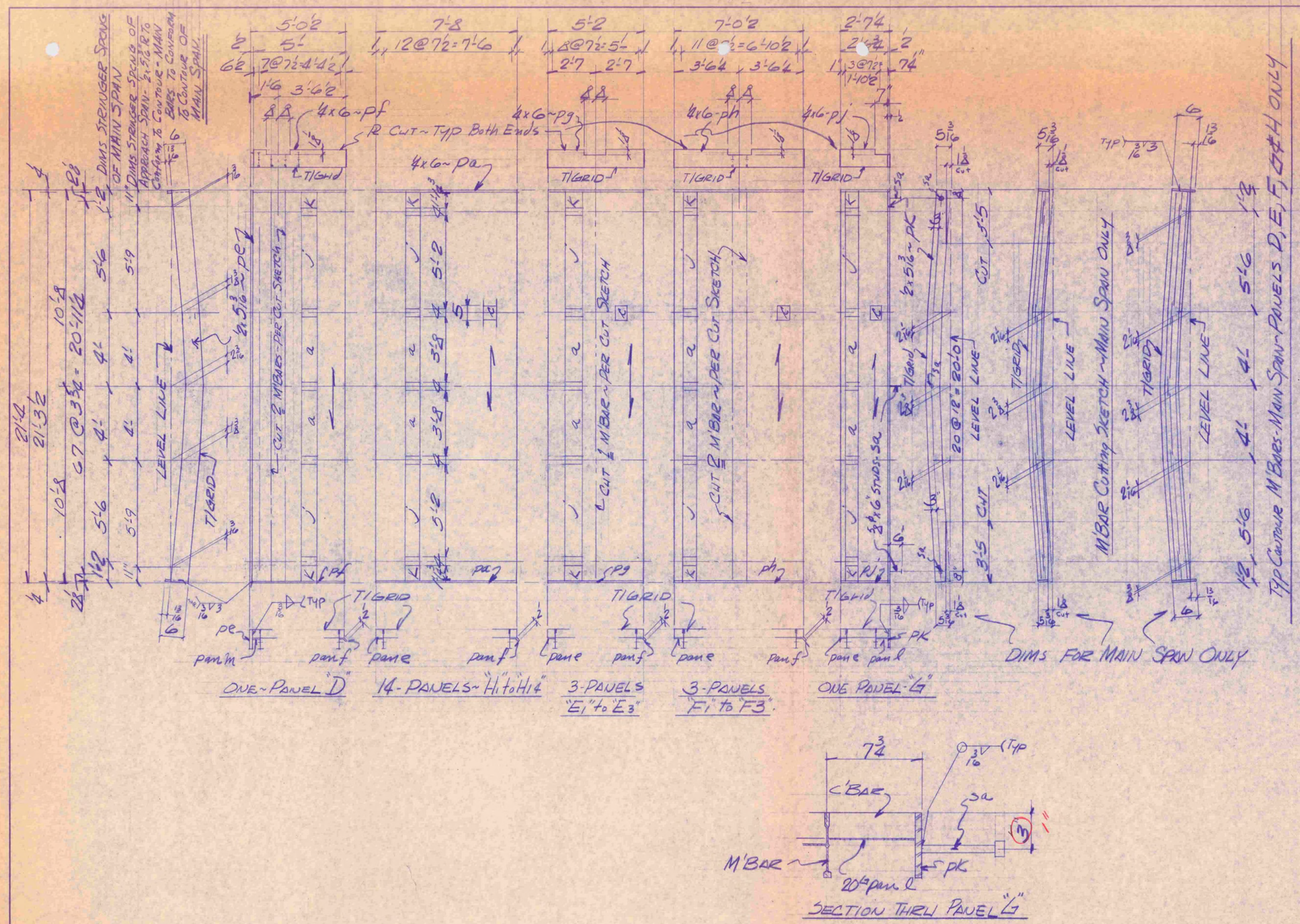

BILL OF MATERIAL

MK.	QTY.	DESCRIPTION	MATL.	REMARKS	WT.
D	1				
	8	M'BAR x 21'-3 1/2			
	68	C'BAR x 5'-0			
E	3	E1 to E3			
	27	M'BAR x 21'-3 1/2			
	204	C'BAR x 5'-2			
F	3	F1 to F3			
	36	M'BAR x 21'-3 1/2			
	204	C'BAR x 7'-0 1/2			
G	1				
	4	M'BAR x 21'-3 1/2			
	68	C'BAR x 2'-6 3/4			
H	14				
	182	M'BAR x 21'-3 1/2			
	952	C'BAR x 7'-8			
pa	28	4x6 x 7'-8			
pg	6	↓ x 5'-2			
ph	6	↓ x 7'-0 1/2			
pj	2	↓ x 2'-6 3/4			
pf	2	↓ x 5'-0			
pe	1	1/2 x 5 3/16 x 21'-4			
pk	1	1/2 x 5 3/16 x 21'-4			
FORM & CLOS PAN					
a	452	20 G x 7 1/16 W x 3'-8			
c	1130	x 7 5/16 W x 0'-5"			
e	21	x 15/16 W x 21'-3 1/2			
f	20	x 1 1/2 W x 21'-3 1/2			
j	452	x 7 5/16 W x 5'-2			
k	452	x 7 5/16 W x 1'-1 3/4			
l	1	x 7 5/16 W x 21'-3 1/2			
m	1	↓ x 6 7/16 W x 21'-3 1/2			
sa	21	5/8 ø x 6" STUDS			

STATE COPY

AUG 11 1978

RECEIVED
CK'D BY DEL OK'D BY
RESUBMIT APPROVED ✓
BY Warren Tripp DATE 8/14/78

SHOP INSPECTION REQUIRED: No
AGENCY: ~
PAINT SAMPLE REQUIRED: ~
CERTIFICATES REQUIRED: No
WELDING ROD: No
WELDERS: No
MATERIAL: ASSO
PAINT: No
REFERENCE DRAWINGS

RICHFORD-SUTTON BHF 0814(1)
REFERENCE PLANS
FOR INFORMATIONAL PURPOSES ONLY
SHEET 45 OF 49

GREULICH, INC.
BRIDGE FLOORING SYSTEMS
1376 FREEPORT ROAD, PITTSBURGH, PENNSYLVANIA 15238 TELEPHONE: (412) 963-9800

DIVISION
REVISIONS | DATE

FOR State Of Vermont - Dept Of Highways (Winterset Inc.)
TITLE Bridge No 3 ~ Richford, Franklin County ~ Route Vt 105-A, betwn Sutton Pt. Canada & East Richford Vt. (U.S.A.)

MADE K DATE 7/24/78 SCALE
CHECK DATE APPROVED
CUSTOMER NO. JOB NO. 78G25 DWG. NO. 10295-3
Sht 3 of 3
2-std dwgs

LOCATION OF FIELD WELD WHEN SIDE SPLICING OF GRID PANELS OCCUR

(DISTANCE SHOWN IS CENTER-CENTER OF STRINGERS)

NOTE: THIS WELDING PROCEEDURE MAY BE ELIMINATED AT THE DISCRETION OF THE DESIGN ENGINEER.

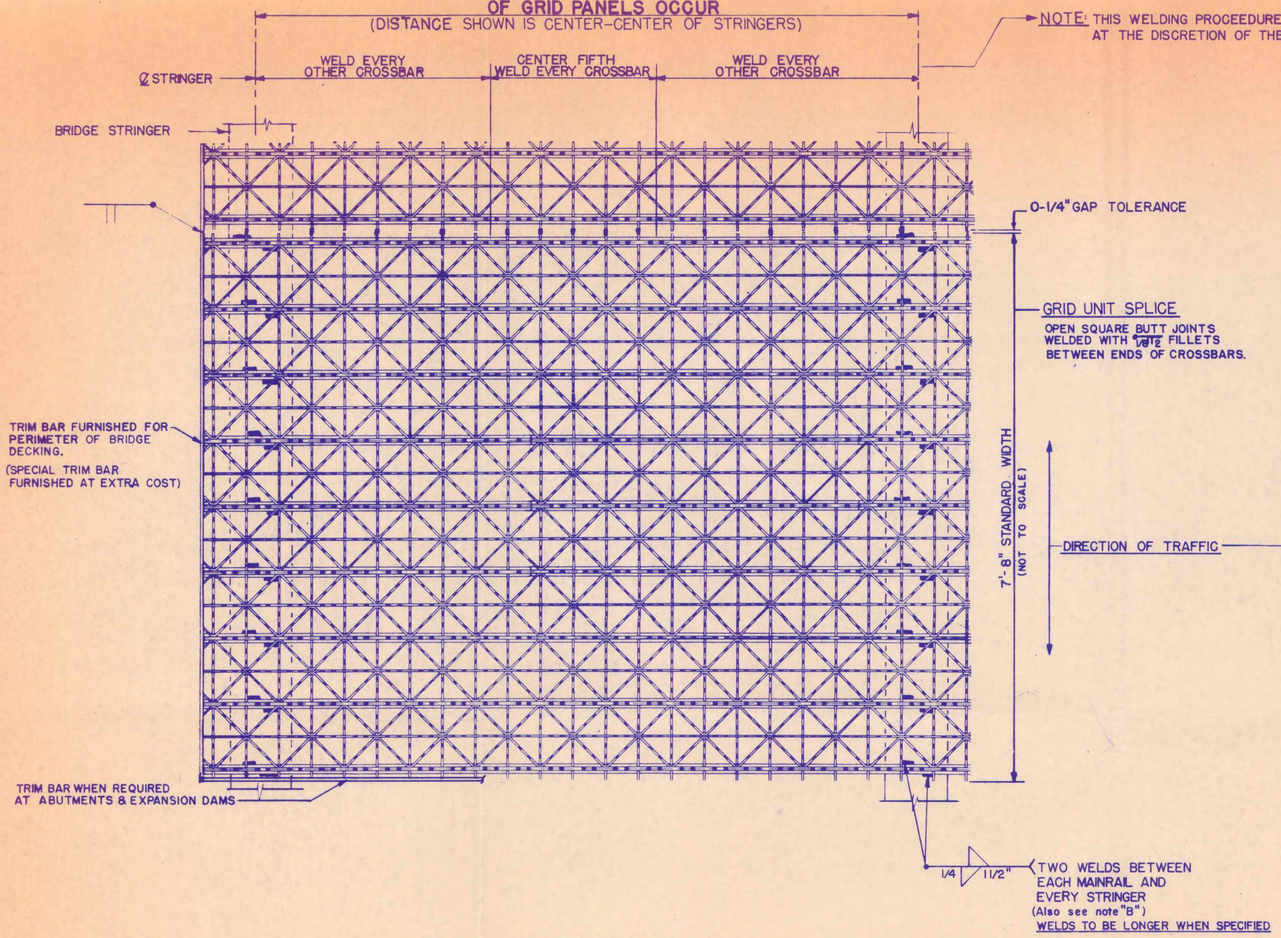

PANEL LAYOUT WITH MAINBARS PERPENDICULAR TO TRAFFIC

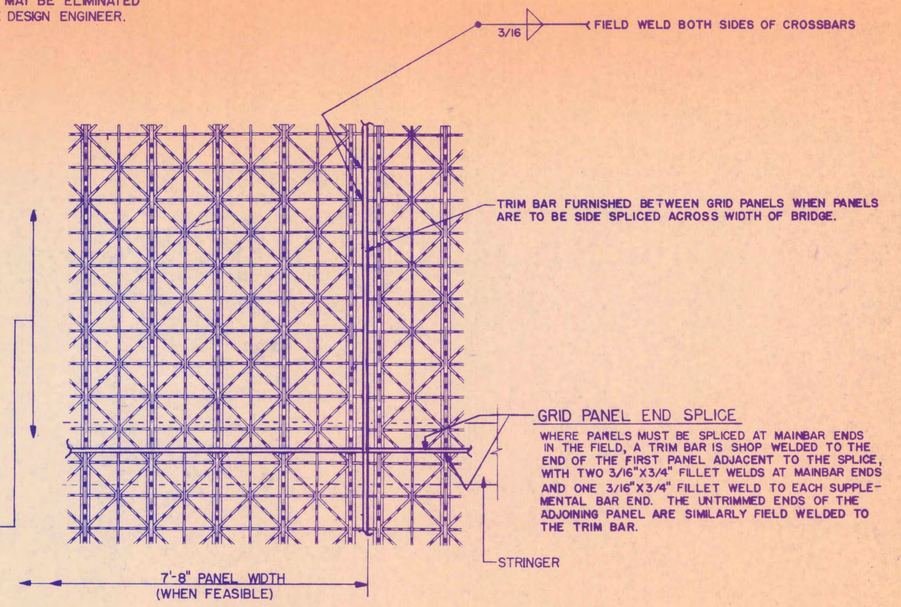

PANEL LAYOUT WITH MAINBARS PARALLEL TO TRAFFIC

INSTALLATION NOTES

(A) GRID PANELS ARE SHOP FABRICATED & ASSEMBLED, AND ARE MATCH MARKED WITH KEY PLAN FOR FIELD INSTALLATION.

(B) IT IS ESSENTIAL THAT MAIN BARS OF GRID PANELS BE IN FULL CONTACT WITH FLANGES OF BRIDGE STRINGERS PRIOR TO REQUIRED FIELD WELDING.

(C) MARKING THE CENTER LINE OR SPACING POINTS BETWEEN PANEL ON THE SUPPORT STEEL WILL INSURE CORRECT PLACEMENT OF PANELS ON BRIDGE, AND AVOID UNDER OR OVER RUN ALONG THE SPAN.

(D) PULL PANELS SQUARE TO THE CENTER LINE OF BRIDGE AND/OR SUPPORTING STEEL PRIOR TO WELDING.

STATE COPY

AUG 11 1978

RECEIVED
CK'D BY DEL OK'D BY
RESUBMIT APPROVED ✓
BY Warren Dige DATE 8/14/78

CUSTOMER'S NOTE: This drawing is to be used as a reference drawing ONLY! Refer to detail drawings for actual installation specifications.

FIELD WELDING DIAGRAM

RICHFORD-SUTTON BHF 0814(1)
REFERENCE PLANS
FOR INFORMATIONAL PURPOSES ONLY
SHEET 46 OF 49

MANUFACTURER RESERVES THE RIGHT TO MAKE MINOR CHANGES FOR PRODUCT IMPROVEMENT
MANUFACTURING TOLERANCES WITHIN ±2% OF SQUARE

GREULICH, INC.
BRIDGE FLOORING SYSTEMS
1376 FREEPORT RD., PGH., PA. 15238

DIVISION | FOR
REVISIONS | DATE
REV | 6/76
MADE DLH | DATE 6/76 | SCALE N.T.S.
CHECK | DATE | APPROVED
TITLE FIELD WELDING DIAGRAM
CUSTOMER NO. | JOB NO. | DWG. NO. 10F-500

BRUNING 40-22 26634

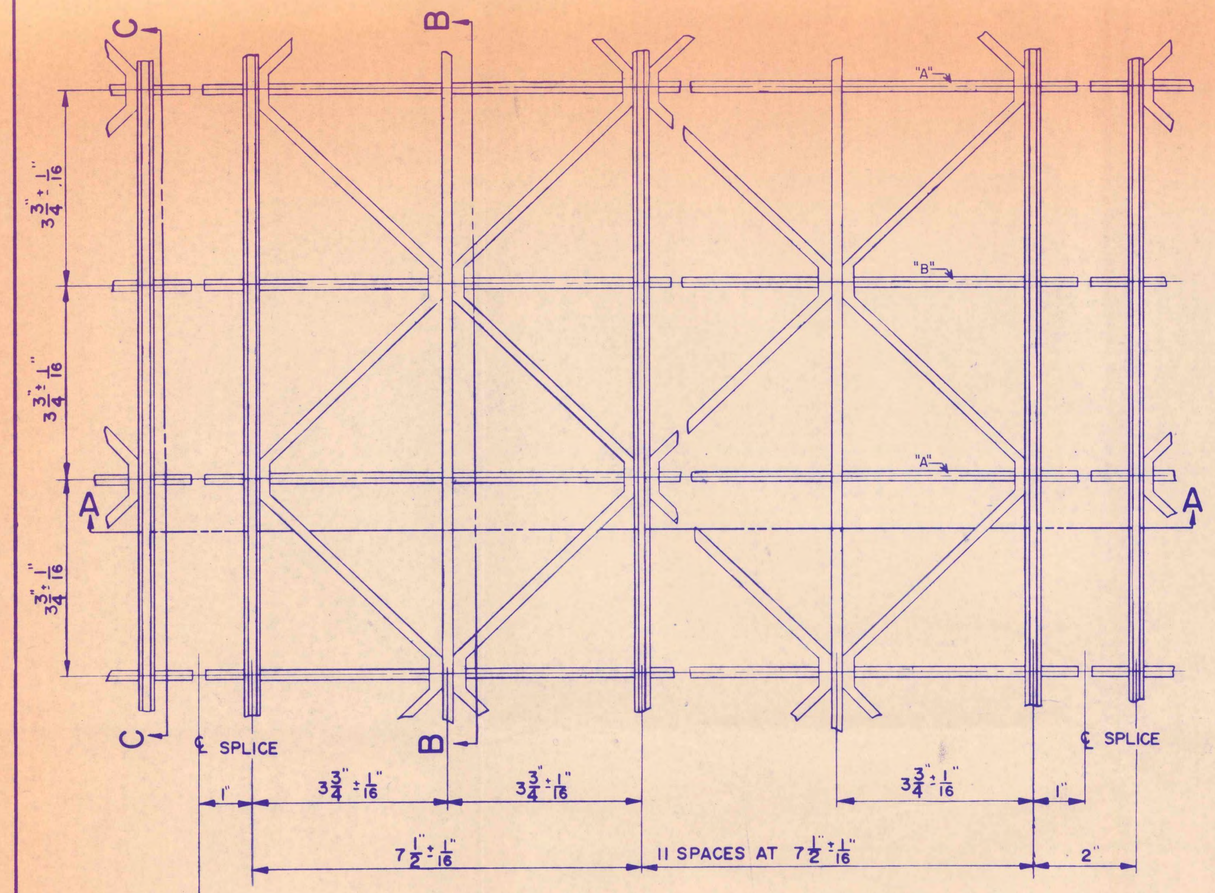

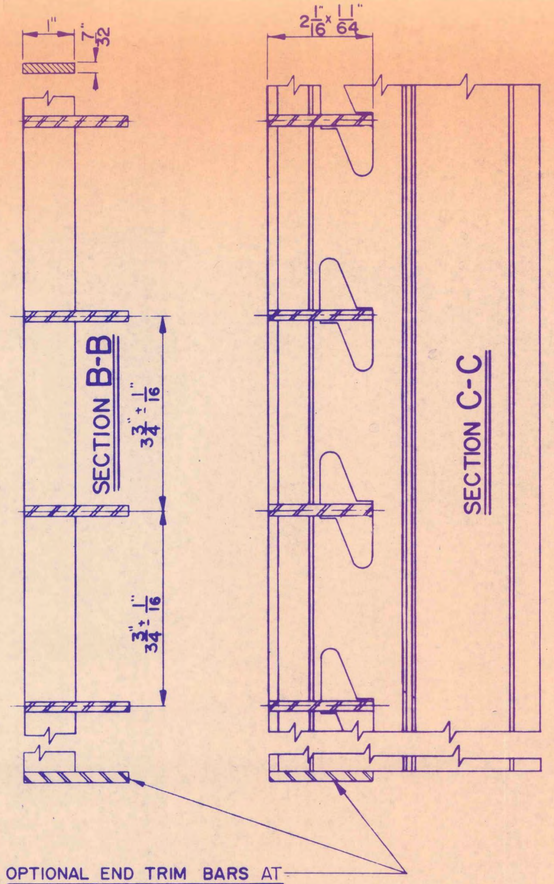

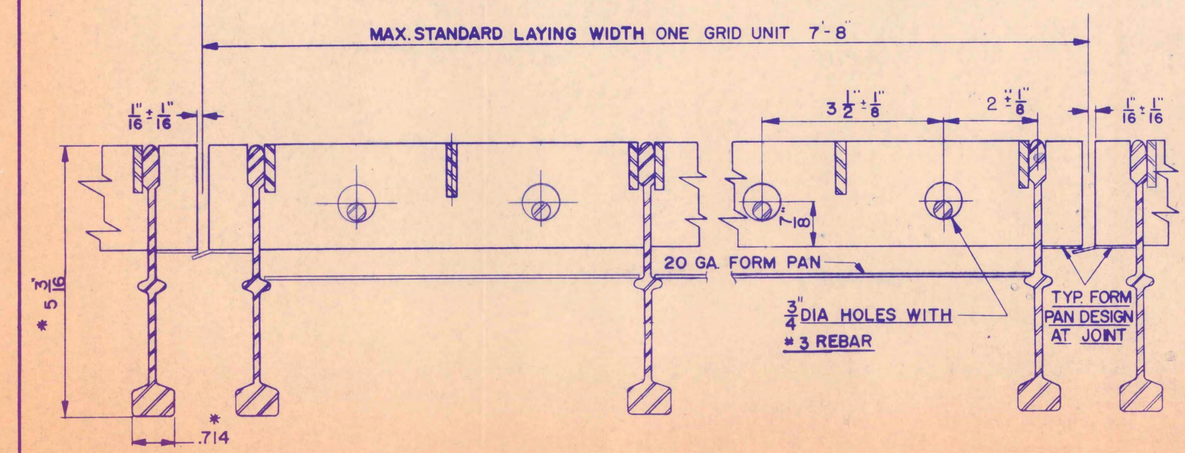

SECTION A-A

	SECTIONAL PROPERTIES PER EACH SQ. FT. ELEMENT		
	MOMENT OF INERTIA	SECTION MODULUS TOP	SECT. MODULUS BOTTOM
CONCRETE FILLED	11.408 IN.^{4}	10.050 IN.^{3}	5.420 IN.^{3}

	MAXIMUM SPAN		
	H-10	H-15	H-20
CONCRETE FILLED	9'-6"	8'-6"	8'-0"

NOTE: MAXIMUM SPAN BASED ON APPLICATIONS CONTINUOUS OVER THREE OR MORE SUPPORTS.

WEIGHT-17.8 LBS.(APPROX.) PER SQ. FT.

MATERIAL SPECIFICATIONS

STEEL: BEAMS & BARS SHALL BE A-588 STEEL CAPABLE OF DEVELOPING A TIGHTLY ADHERENT IMPERVIOUS OXIDE COATING AS THE STEEL WEATHERS.
PAINT: NONE REQUIRED - THIS SPECIAL NON-CORRODING IN ATMOSPHERE STEEL GRID IS USED BARE AS FABRICATED.

WELDING: AS PER PROCESS NS3M .120
CLASSIFCATION AWSE 70 T6

AUG 11 1978
RECEIVED
CK'D BY DEL OK'D BY ✓
RESUBMIT APPROVED ✓
BY Warren Page DATE 8/14/78

A-588 WEATHERING STEEL

Customer's Note: This drawing is to be used as a reference drawing only! Refer to detail drawings for actual installation specifications.

STATE COPY

SHOP INSPECTION REQUIRED:
AGENCY:
PAINT SAMPLE REQUIRED:
CERTIFICATES REQUIRED:
WELDING ROD:
WELDERS:
MATERIAL:
PAINT:
REFERENCE DRAWINGS:

GREULICH, INC.
BRIDGE FLOORING SYSTEMS
1376 FREEPORT ROAD, PITTSBURGH, PA. 15238

DIVISION
REVISIONS / DATE
REV. 1-78
REV. 12-16-76
REV. 1-15-75
REV. 5-17-74
MADE MANOLAKIS DATE 5-7-74
CHECK DATE
SCALE
APPROVED

FOR
TITLE 5-inch 4-way CONCRETE FILLED STEEL GRID A-588
CUSTOMER NO. JOB NO. DWG NO. FF-501

RICHFORD-SUTTON BHF 0814(1)
REFERENCE PLANS
FOR INFORMATIONAL PURPOSES ONLY
SHEET 47 OF 49

MANUFACTURER RESERVES THE RIGHT TO MAKE MINOR CHANGES FOR PRODUCT IMPROVEMENT
* SUBJECT TO MILL TOLERANCES

BILL OF MATERIAL

NO. PIECES	MARK	DESCRIPTION	LENGTH FT.	LENGTH IN.	WEIGHT
		PLAIN MATERIAL			
6		BAR 6 x 1/2	1	10 1/2	115
11		L 2 x 2 x 3/8	0	7	30
31		3/4 D SHEAR STUDS	0	5	16
					161
	1	PLAIN MAT SHIP ON 10-23-78			
1		L 3 x 3 x 1/4	4	0	20
					181

STATE COPY

DEC 6 1978

RECEIVED
CK'D BY DZL OK'D BY ✓
RESUBMIT ____ APPROVED ____
BY RLO DATE 12/6/78

VERMONT STRUCTURAL STEEL CORPORATION
BURLINGTON, VT.

		DATE
DRAWN BY	HD	12-4
OK'D BY		

HOLES —
BOLTS —
PAINT —

PROJECT RICHFORD BRIDGE
LOCATION VT. 105-A OVER MISSISQUOI RIVER
CUSTOMER WHITEROCK INC.
ARCHITECT STATE OF VERMONT HIGHWAYS DEPT
JOB NO. 78-328 SHEET NO. 2

PRINT RECORD		
NO.	FOR	DATE
3D	SHOP	12-4
2	STATE	12-5

SM QCP 272

RICHFORD-SUTTON BHF 0814(1)
REFERENCE PLANS
FOR INFORMATIONAL PURPOSES ONLY
SHEET 48 OF 49

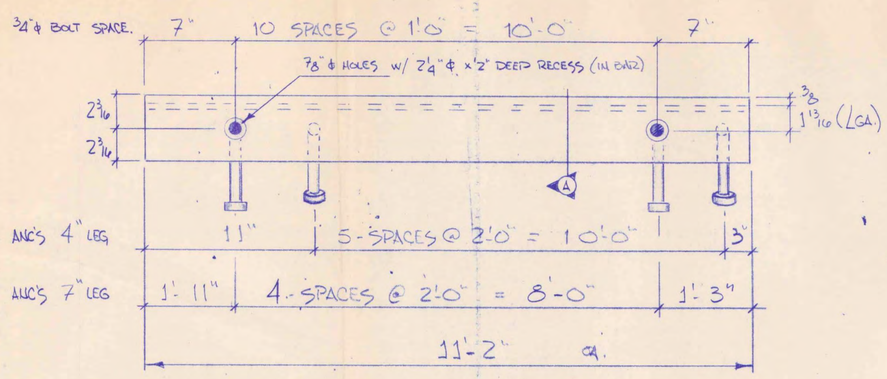

EXP JOINT 4-REQ'D AS SHOWN (NO PAINT)

TOTAL LENGTH OF EXP JOINT = 22'-4"
TWO SEC'S REQ'D EA SIDE (FIELD WELD TOGETHER)

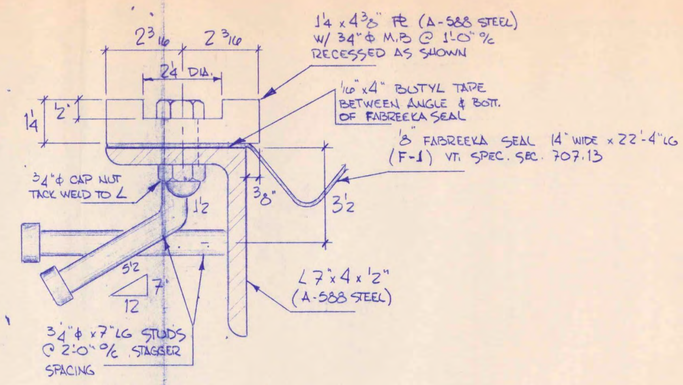

SECTION -A

NO PAINT

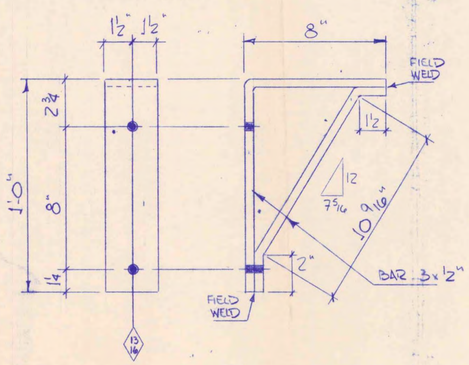

DRAIN TROUGH BRACKET (4-REQ'D)

FIELD WELD BRACKETS TO CH. DRAIN TROUGH

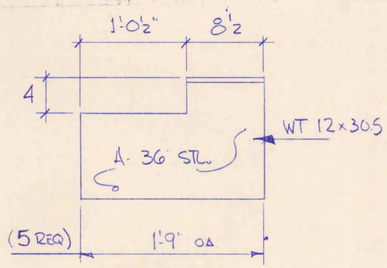

EXTENSION BRACKET

-50

	A-36 STEEL	
(2-REQ'D)	C15 x 33.9	x 5'-4 3/8 OA
(2-REQ'D)	C15 x 33.9	x 3'-7 3/8" OA.

INTERMEDIATE DIAPHRAGMS

	A 36 STEEL	
(2 REQ'D)	MC 6 x 18	10'-0" OA.

DRAIN TROUGH

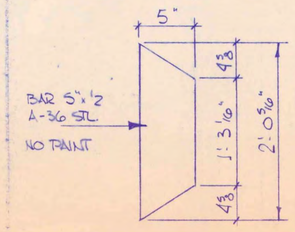

DIAPHRAGM PLATE (8-REQ'D)

BILL OF MATERIAL

NO. PIECES	MARK	DESCRIPTION	LENGTH FT.	LENGTH IN.		WEIGHT	CLASSIFICATION FIT	CLASSIFICATION HOLES

DEC 6 1978

RECEIVED
CK'D BY RBL OK'D BY
RESUBMIT APPROVED ✓
BY RLO DATE 12/6/78

JOB NO. SHEET NO.

A-36 U.N.

BILL OF MATERIAL

NO. PIECES	MARK	DESCRIPTION	LENGTH FT.	LENGTH IN.		WEIGHT	CLASSIFICATION FIT	CLASSIFICATION HOLES
		EXP. JOINT						
4		PL 1/4 x 4 3/8 A-588	11	2"	BETH 51442	830		
4		L 7 x 4 x 1/2 A-588	11	2	do	799		
48		3/4" ϕ STUDS	0	7	STK	48		
44		3/4" ϕ H.H. CAP SCR'S	0	2		21		
44		3/4"-10 CAP NUT						
ONE		14" x 1/8" FABREEKA	22	4	FABREEKA 51443	23		
2		4" x 1/16" BUTYL TAPE	22	4	do	7		
						1728		
		INTERMEDIATE DIAPHRAGMS						
2		C15 x 33.9	5	4 3/8	RES STK (A-588)			
2		do	3	7 3/8	↓	609		
8		BAR 5" x 1/2	2	0 5/16	STK	138		
						747		
		DRAIN TROUGH						
2		MC 6 x 18	10	0	BETH. 51442 (A 36)	360		
4		BAR 3 x 1/2	1	8	STK			
4		do	1	2 1/16	↓	58		
8		3/4" ϕ HILTI KWIK BOLT	0	5 1/2	FIELD MATERIAL	6		
						424		
		EXTENSION BK.						
5	-50	WT 12 x 30.5 (W 24 x 61)	1	9	STK	367		
						3166		

VERMONT STRUCTURAL STEEL CORPORATION
BURLINGTON, VERMONT

PRINT AND REVISION RECORD

DATE	FOR	NO.	REV. #	BY	REVISION
9-21	APP.	5			
9-28	FIELD	6			
11-8	SHOP	2			
12-5	do	2			

STATE COPY

PROJECT RICHFORD BRIDGE
LOCATION VT 105-A OVER MISSISQUI RIVER
CUSTOMER WINTERSET INC.
ARCHITECT VT. DEPT. OF HIGHWAYS
HOLES AS NOTED DRAWN BY STACK
BOLTS CHECKED BY
PAINT BASIC LEAD SILICON ZINC-ALT. DATE 9-18-78
JOB NO. 78-3218 SHEET NO. 1

RICHFORD-SUTTON BHF 0814(1)
REFERENCE PLANS
FOR INFORMATIONAL PURPOSES ONLY
SHEET 49 OF 49

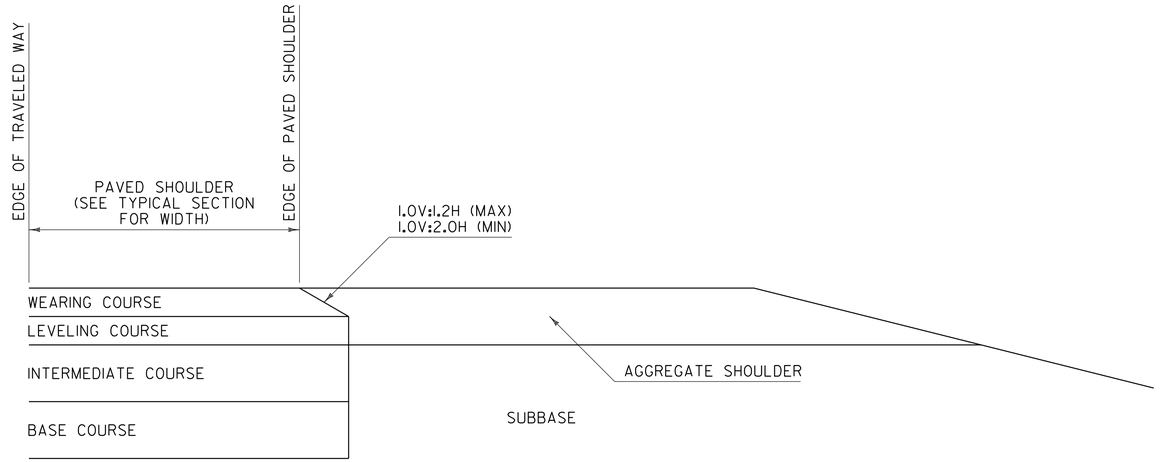

SAFETY EDGE DETAIL
FOR PAVING BELOW WEARING COURSE

NOTES:

1. THIS DETAIL IS INTENDED FOR WHEN PAVING EXTENDS BELOW THE WEARING COURSE.
2. PRIOR TO PLACEMENT OF THE LEVELING AND/OR WEARING COURSE, THE SUBBASE LOCATED BENEATH THE AGGREGATE SHOULDER SHALL BE PREPARED FLUSH WITH THE BOTTOM OF THE LEVELING COURSE.
3. BASE COURSE LIMITS MAY VARY, SEE TYPICAL SECTIONS FOR WIDTH.

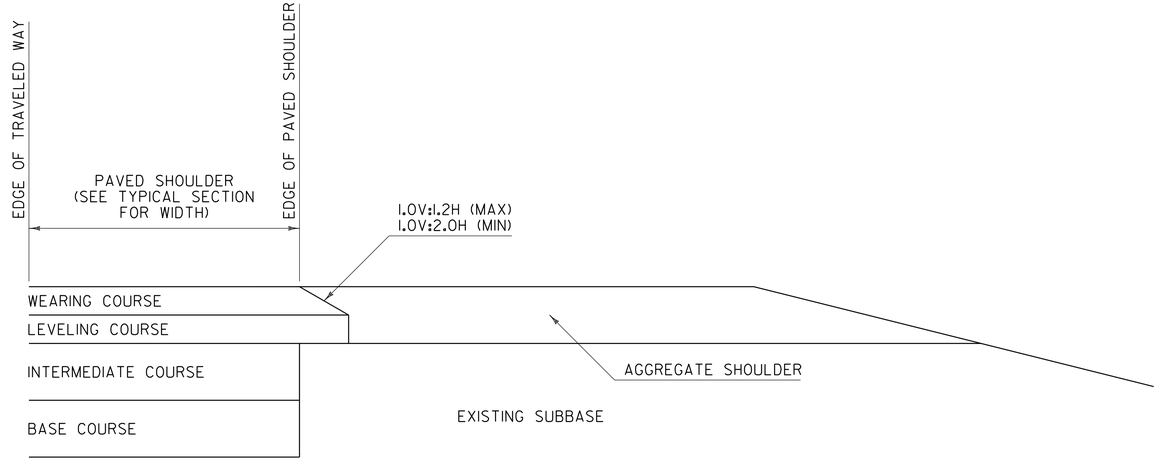

SAFETY EDGE DETAIL
FOR PAVING WEARING COURSE ONLY

NOTES:

1. THIS DETAIL IS INTENDED FOR WHEN ONLY THE LEVELING AND/OR WEARING COURSE IS TO BE PLACED.
2. PAVEMENT COURSES MAY VARY, SEE TYPICAL SECTIONS FOR ACTUAL PAVEMENT COURSES REQUIRED.

SAFETY EDGE WIDTH BASED ON WEARING COURSE THICKNESS AND A 1V:1.6H SLOPE	
WEARING COURSE THICKNESS (INCHES)	NOMINAL SAFETY EDGE WIDTH (INCHES)
1.25	2.000
1.50	2.375
1.75	2.750
2.00	3.125
2.25	3.500
2.50	4.000

GENERAL NOTES:

1. PLACEMENT OF THE WEARING COURSE SHALL INCLUDE THE SAFETY EDGE, UNLESS THE FOLLOWING APPLIES:
   - A. THE ADJACENT SLOPE IS STEEPER THAN THE SAFETY EDGE.
   - B. THE EDGE OF PAVEMENT BEING PLACED ABUTS BOUND MATERIAL.
   - C. VEHICLES ARE RESTRICTED FROM LEAVING THE PAVED SURFACE (EXAMPLE: GUARDRAIL).
2. THE SAFETY EDGE SHALL BE FORMED IN SUCH A WAY THAT THE BITUMINOUS CONCRETE PAVEMENT IS EXTRUDED OR COMPRESSED TO FORM THE SLOPE. DEVICES THAT SIMPLY STRIKE-OFF THE MIX WITHOUT PROVIDING ANY COMPACTIVE EFFORT WILL NOT BE ALLOWED.
3. THE SAFETY EDGE SHALL NOT BE CONSIDERED PART OF THE PAVED SHOULDER.
4. THIS WORK SHALL BE INCIDENTAL TO THE RESPECTIVE BITUMINOUS CONCRETE PAVEMENT ITEM.

REV.	DATE	DESCRIPTION
0	MAR. 29, 2016	ORIGINAL APPROVAL
OTHER DETAILS REQUIRED: NONE		
DETAILS APPROVED FOR USE BY HIGHWAY SAFETY & DESIGN		

SAFETY EDGE DETAILS

VTrans Working to Get You There VERMONT AGENCY OF TRANSPORTATION

HIGHWAY SAFETY & DESIGN DETAIL

HSD-400.01

GUARDRAIL DELINEATOR DETAIL

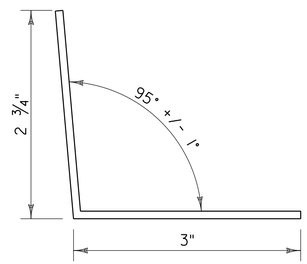

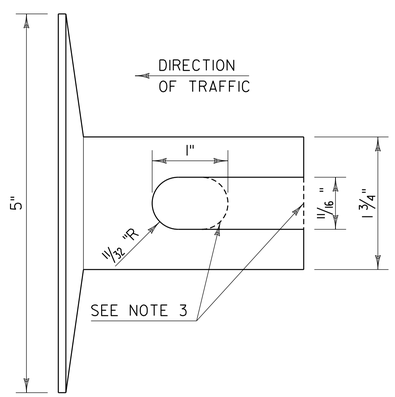

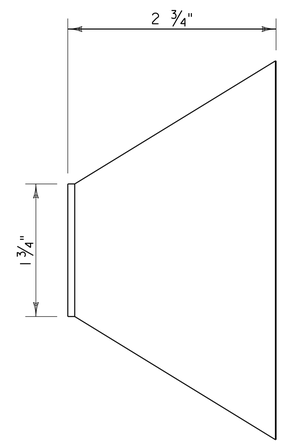

NOTES:

1. GUARDRAIL DELINEATOR BASE MATERIAL SHALL BE 0.10 INCH THICK ALUMINUM IN ACCORDANCE WITH SUBSECTION 728.04 DELINEATION DEVICES.
2. GUARDRAIL DELINEATORS SHALL HAVE WHITE RETROREFLECTIVE SHEETING, EQUAL TO OR EXCEEDING TYPE III IN ACCORDANCE WITH SUBSECTION 750.08(B)(3) ON THE RIGHT SIDE OF THE TRAVELED WAY AND YELLOW RETROREFLECTIVE SHEETING EQUAL TO OR EXCEEDING TYPE VII IN ACCORDANCE WITH SUBSECTION 750.08(B)(7) ON THE LEFT SIDE OF THE TRAVELED WAY IN RESPECT TO APPROACHING TRAFFIC. ON ONE DIRECTIONAL ROADWAYS RETROREFLECTIVE SHEETING MAY BE OMITTED ON FACES WHERE THERE WILL BE NO APPROACHING TRAFFIC.
3. HOLE MAY BE USED IN PLACE OF SLOT.

GUARDRAIL TERMINAL LABEL DETAIL

NOTES:

1. LINE ONE SHALL INDICATE THE INSTALLATION YEAR (YYYY).
2. LINE TWO SHALL INDICATE THE MODEL AS IDENTIFIED ON THE APPROVED PRODUCTS LIST. FOR GENERIC INSTALLATIONS THE STANDARD DRAWING DESIGNATION OR NAME AS IDENTIFIED IN THE FHWA ELIGIBILITY LETTER SHALL BE USED.
3. LINE THREE SHALL SHALL INDICATE ADDITIONAL MODEL INFORMATION IF NECESSARY.
4. LINE FOUR SHALL INDICATE FLARED (FLRD) OR TANGENT (TANG).
5. LEGEND SHALL BE SIZE 3/4 INCH ARIEL FONT.
6. LEGEND SHALL BE BLACK ON A WHITE BACKGROUND, LEGEND AND BACKGROUND SHALL NOT BE REFLECTIVE.
7. SUITABLE MATERIAL SHALL BE USED SO AS TO NOT DETERIORATE DURING EXPOSURE TO WEATHER.
8. LABELS SHALL BE APPLIED IN SUCH A WAY THAT THEY REMAIN INTACT DURING THE LIFE OF THE TERMINAL.
9. FOR W-BEAM GUARDRAIL, LABEL SHALL BE PLACED ON THE TOP OF POST ONE FACING AWAY FROM TRAFFIC.
10. FOR BOX BEAM GUARDRAIL, LABEL SHALL BE PLACED ON THE BOX BEAM ADJACENT TO POST ONE FACING AWAY FROM TRAFFIC.
11. PAYMENT SHALL BE INCIDENTAL TO OTHER TRAFFIC BARRIER ITEMS.

REV.	DATE	DESCRIPTION
0	NOV. 3, 2015	ORIGINAL APPROVAL
1	FEB. 27, 2017	UPDATED NAME, MINOR CORRECTIONS AND ADDED GUARDRAIL DELINEATOR DETAIL

OTHER DETAILS REQUIRED: NONE

DETAILS APPROVED FOR USE BY HIGHWAY SAFETY & DESIGN

MISCELLANEOUS GUARDRAIL DETAILS

VTrans Working to Get You There VERMONT AGENCY OF TRANSPORTATION

HIGHWAY SAFETY & DESIGN DETAIL

HSD-621.06

CONCRETE GENERAL NOTES

1. ALL EXPOSED EDGES OF CONCRETE SHALL BE CHAMFERED 1" x 1"
2. REINFORCING STEEL SIZE AND SPACING SHOWN IN THE PLANS IS BASED ON 60 KSI STEEL, UNLESS NOTED OTHERWISE. WITH THE ENGINEER'S PERMISSION, BAR SIZE AND SPACING MAY BE MODIFIED ACCORDING TO THE LATEST AASHTO LRFD BRIDGE DESIGN SPECIFICATION AND STRUCTURES DESIGN MANUAL WHEN USING HIGHER STRENGTH STEEL.

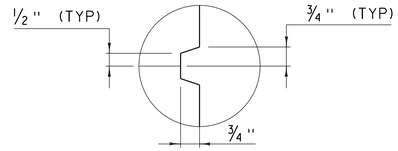

SCORE MARK DETAIL
(NOT TO SCALE)

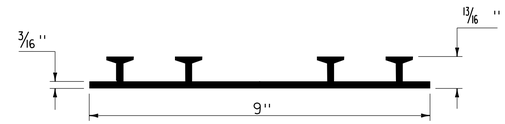

P.V.C. WATERSTOP FOR CONSTRUCTION JOINTS
(NOT TO SCALE)

PAYMENT FOR THE P.V.C. WATERSTOP SHALL BE INCIDENTAL TO THE UNIT BID PRICE FOR THE ADJACENT CONCRETE.

OTHER CONFIGURATIONS OF WATERSTOP MAY BE USED UPON APPROVAL OF THE ENGINEER.

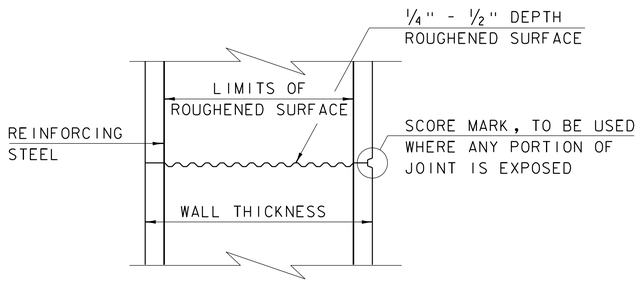

TYPICAL HORIZONTAL CONSTRUCTION JOINT
(NOT TO SCALE)

1. THE SURFACE OF THE CONCRETE CONSTRUCTION JOINTS SHALL BE CLEANED AND FREE OF LAITANCE.
2. IMMEDIATELY BEFORE NEW CONCRETE IS PLACED, ALL CONSTRUCTION JOINTS SHALL BE WETTED AND STANDING WATER REMOVED.

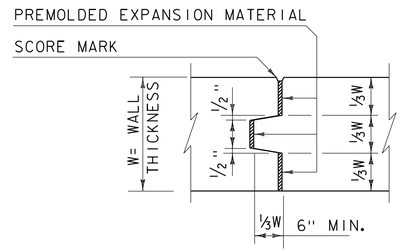

TYPICAL CONCRETE EXPANSION JOINT
(NOT TO SCALE)

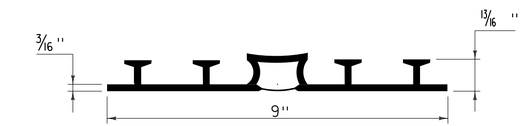

P.V.C. WATERSTOP FOR EXPANSION JOINTS
(NOT TO SCALE)

PAYMENT FOR THE P.V.C. WATERSTOP SHALL BE INCIDENTAL TO THE UNIT BID PRICE FOR THE ADJACENT CONCRETE.

OTHER CONFIGURATIONS OF WATERSTOP MAY BE USED UPON APPROVAL OF THE ENGINEER.

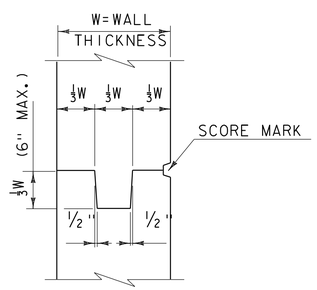

TYPICAL CONCRETE CONSTRUCTION JOINT
(NOT TO SCALE)

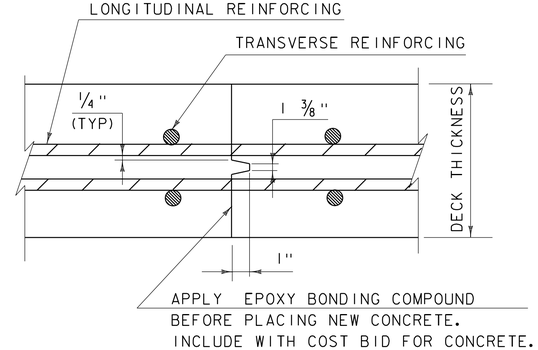

TRANSVERSE BRIDGE SLAB CONSTRUCTION JOINT DETAILS
(NOT TO SCALE)

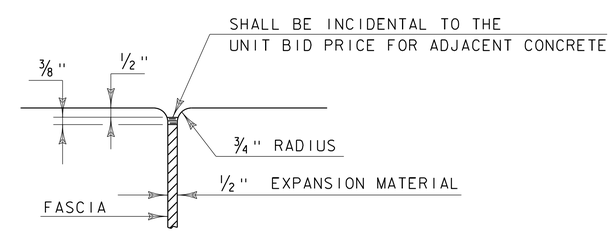

JOINT BETWEEN FASCIA AND WINGWALL
(NOT TO SCALE)

REVISIONS	
MAY 7, 2010	APPROVED FOR USE BY VAOT STRUCTURES SECTION
FEBRUARY 9, 2012	REBAR SUBSTITUTION ALLOWANCE ADDED TO CONCRETE GENERAL NOTES.

CONCRETE DETAILS AND NOTES

VERMONT AGENCY OF TRANSPORTATION
STRUCTURES SECTION

STRUCTURES DETAIL
SD-501.00

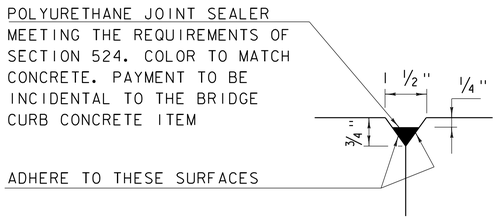

DETAIL "B"
(NOT TO SCALE)

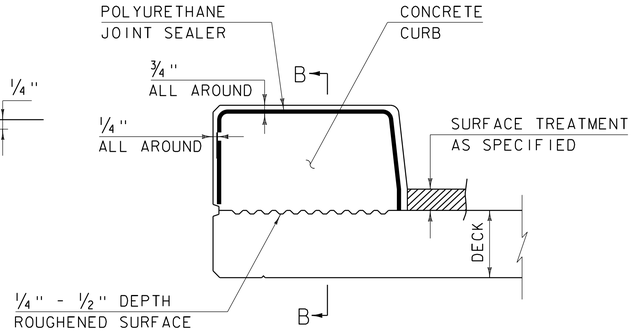

CONCRETE CURB JOINT SECTION
(NOT TO SCALE)

1. SEE TYPICAL HORIZONTAL CONSTRUCTION JOINT DETAIL FOR ADDITIONAL INFORMATION

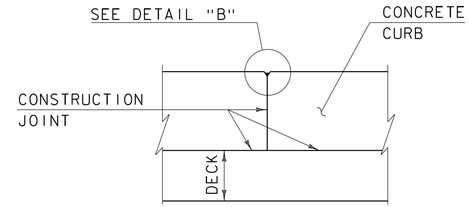

SECTION B - B
(NOT TO SCALE)

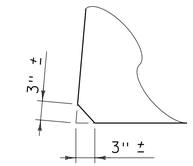

ACUTE ANGLE CLIP DETAIL
(NOT TO SCALE)

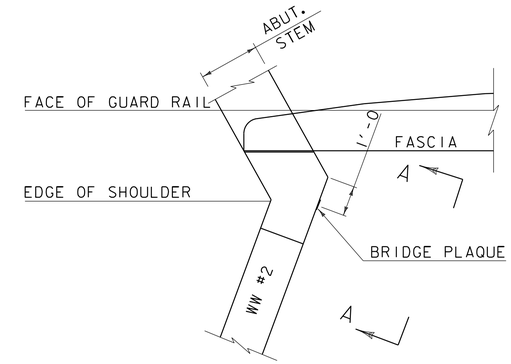

PLAN

CONCRETE CURB JOINT NOTES

1. CONCRETE CURBS MAY BE PLACED IN ONE CONTINUOUS OPERATION IF AN APPROVED SHRINKAGE REDUCING ADMIXTURE LISTED IN THE SPECIAL PROVISIONS IS USED WITH THE CONCRETE MIX DESIGN. PAYMENT FOR THE SHRINKAGE REDUCING ADMIXTURE WILL BE INCIDENTAL TO THE BRIDGE CURB CONCRETE ITEM.

2. IF THE CONTRACTOR CHOOSES NOT TO USE AN APPROVED SHRINKAGE REDUCING ADMIXTURE, THE CURBS SHALL BE CONSTRUCTED WITH CONSTRUCTION JOINTS SPACED AT A MAXIMUM OF 15'-0" CENTER TO CENTER AND 2'-0" MINIMUM FROM THE CENTER OF NEAREST BRIDGE RAILING POST.

3. ON MULTI-SPAN CONTINUOUS SUPERSTRUCTURES, REGARDLESS OF WHETHER APPROVED SHRINKAGE REDUCING ADMIXTURE IS USED, CURB JOINTS SHALL BE LOCATED OVER THE CENTERLINE OF PIERS AND 7'-0" EACH SIDE OF THE CENTERLINE OF EACH PIER.

4. WHEN CURB JOINTS ARE USED THE CURBS SHALL BE PLACED IN ALTERNATE SECTIONS WITH A MINIMUM OF 48 HOUR DELAY BETWEEN ADJACENT PLACEMENTS.

5. LONGITUDINAL REINFORCING SHALL BE CONTINUOUS THROUGH CURB CONSTRUCTION JOINTS. CURB STIRRUP BARS SHALL BE TURNED AS NECESSARY TO MAINTAIN COVER IN THE FLARED CURB ENDS.

6. THE JOINT SPACING AND DETAILS SHOWN SHALL APPLY TO SIDEWALKS WHEN SHOWN IN THE PLANS.

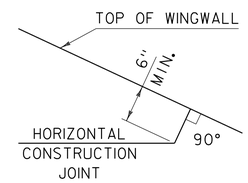

HORIZONTAL WINGWALL CONSTRUCTION JOINT
(NOT TO SCALE)

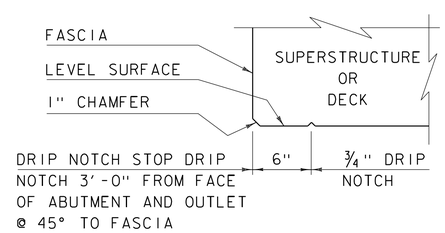

DRIP NOTCH DETAIL
(NOT TO SCALE)

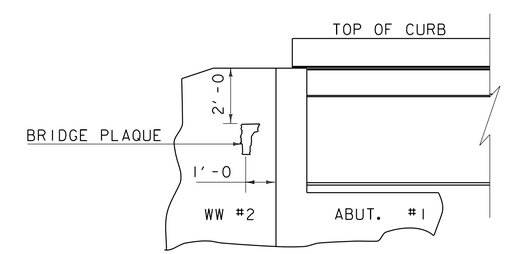

VIEW "A - A"

BRIDGE PLAQUE
(NOT TO SCALE)

THE BRIDGE PLAQUE WILL BE SUPPLIED BY THE AGENCY OF TRANSPORTATION AND SHALL BE INSTALLED BY THE CONTRACTOR AT ABUTMENT #1 ON THE RIGHT SIDE AS SHOWN OR AS DIRECTED BY THE ENGINEER.

PAYMENT FOR INSTALLATION OF THE BRIDGE PLAQUE SHALL BE INCIDENTAL TO THE ADJACENT CONCRETE.

REVISIONS

MAY 7, 2010	APPROVED FOR USE BY VAOT STRUCTURES SECTION
JUNE 4, 2010	MODIFIED AND ADDED TWO DETAILS
OCTOBER 10, 2012	MODIFIED HORZ. JOINT WINGWALL ADD 6" MIN. DIMENSION

CONCRETE DETAILS AND NOTES

VERMONT AGENCY OF TRANSPORTATION
STRUCTURES - SECTION

STRUCTURES DETAIL
SD-502.00

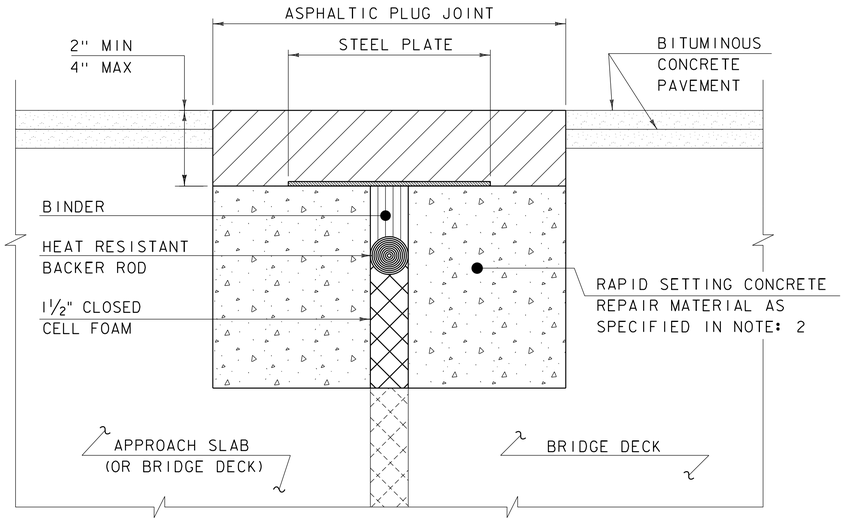

ASPHALTIC PLUG JOINT DETAIL - REHAB

NOTES:

1. THE CONTRACTOR SHALL REMOVE ALL ASPHALTIC PLUG JOINT MATERIAL AND DETERIORATED CONCRETE AS DIRECTED BY THE ENGINEER. REMOVAL OF THE FIRST 4 INCHES OF MATERIAL SHALL BE INCLUDED IN THE BID PRICE FOR ITEM 516.10 BRIDGE EXPANSION JOINT, ASPHALTIC PLUG. ANY REMOVAL OF MATERIAL GREATER THAN 4 INCHES SHALL BE INCLUDED IN THE BID PRICE OF ITEM 580.20 RAPID SETTING CONCRETE REPAIR MATERIAL WITH COARSE AGGREGATE.

2. THE CONTRACTOR SHALL REPLACE REMOVED MATERIAL THAT IS LESS THAN 4" FROM FINISHED GRADE WITH ASPHALTIC PLUG JOINT MATERIAL MEETING THE REQUIREMENTS OF SUBSECTION 707.15. ALL REMOVED MATERIAL THAT IS GREATER THAN 4 INCHES FROM FINISHED GRADE SHALL BE REPLACED WITH RAPID SETTING CONCRETE REPAIR MATERIAL WITH COARSE AGGREGATE MEETING THE REQUIREMENTS OF SUBSECTION 780.04.

3. REINFORCING STEEL NOT SHOWN FOR CLARITY.

4. PLACE 1/4" THICK BY 8" WIDE SECTIONS OF STEEL PLATE OVER THE CENTER OF THE MOVEMENT GAP. SECURE THE PLATES FROM MOVING BY INSERTING LOCATING PINS THROUGH THE PRE-STAMPED HOLES INTO BACKER ROD AND COVER WITH HOT BINDER. THE STEEL PLATES MAY BE OMITTED WHERE THE ENGINEER DETERMINES THAT THE APPROACH SLAB OR BRIDGE DECK WILL PROVIDE INADEQUATE SUPPORT AND WHERE VERTICAL MOVEMENT OF THE PLATES MIGHT OCCUR.

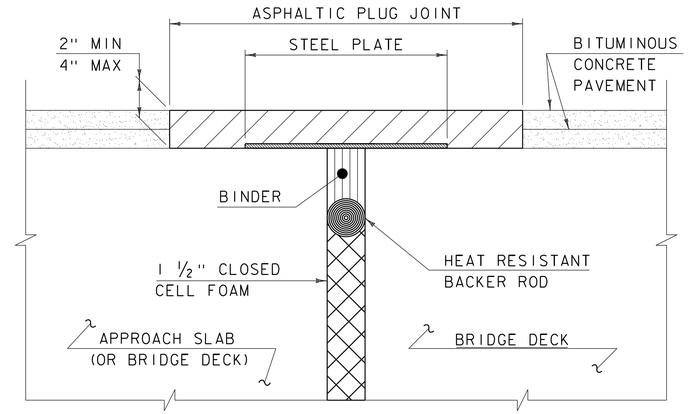

ASPHALTIC PLUG JOINT DETAIL "A" - NEW

NOTE:
PLACE 1/4" THICK BY 8" WIDE SECTIONS OF STEEL PLATE OVER THE CENTER OF THE MOVEMENT GAP. SECURE THE PLATES FROM MOVING BY INSERTING LOCATING PINS THROUGH THE PRE-STAMPED HOLES INTO BACKER ROD AND COVER WITH HOT BINDER.

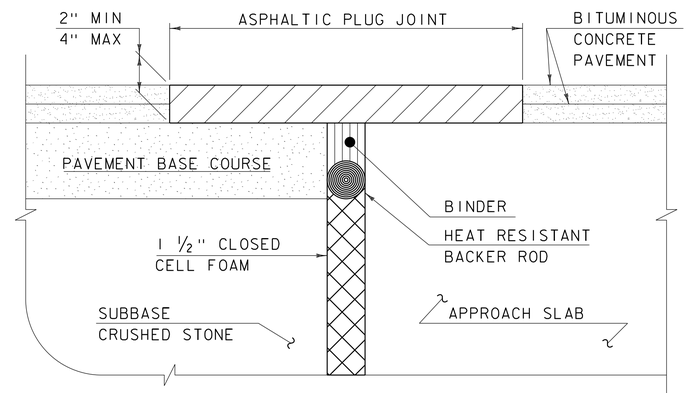

ASPHALTIC PLUG JOINT DETAIL "B" - NEW

ASPHALTIC PLUG JOINT NOTES

INSTALLATION:

1. LOCATE THE JOINT CENTRALLY OVER THE DECK OVERLAY EXPANSION GAP OR FIXED JOINT, MARKED OUT TO THE MANUFACTURER'S RECOMMENDED WIDTH.

2. REMOVE THE BITUMINOUS CONCRETE PAVEMENT FULL DEPTH AS SHOWN ON THE PLANS. THE PAVEMENT SHALL BE DRY AND SAW CUT TO THE LIMITS REQUIRED TO PLACE THE JOINT. A PNEUMATIC HAMMER AND CHISEL MAY BE USED ADJACENT TO THE CURB ONLY WHEN SAW CUTTING IS NOT POSSIBLE.

3. BLAST CLEAN THE JOINT AREA OF DEBRIS, ASPHALT AND SHEET MEMBRANE. THOROUGHLY DRY THE JOINT AREA WITH COMPRESSED AIR PRIOR TO APPLYING BINDER MATERIAL.

4. PLACE PROPERLY SIZED HEAT RESISTANT BACKER ROD IN THE MOVEMENT GAP ALLOWING FOR 1" +/- OF BINDER ABOVE THE ROD.

5. HEAT AND PLACE THE BINDER MATERIAL AS RECOMMENDED BY THE MANUFACTURER.

6. IMMEDIATELY AFTER TOP COATING, CAST AN ANTI-SKID MATERIAL OVER THE JOINT TO REDUCE THE RISK OF TRACKING.

WEATHER LIMITATIONS

APPLY BINDER MATERIAL ONLY WHEN THE FOLLOWING CONDITIONS PREVAIL OR AS RECOMMENDED BY THE MANUFACTURER:

1. THE AMBIENT AIR TEMPERATURE IS AT LEAST 10 DEG C (50 DEG F) AND RISING.

2. THE ROAD SURFACE IS DRY.

3. WEATHER CONDITIONS OR OTHER CONDITIONS ARE FAVORABLE AND ARE EXPECTED TO REMAIN SO FOR THE PERFORMANCE OF SATISFACTORY WORK.

DETAILS ON THIS SHEET ARE NOT TO SCALE.

REVISIONS	
MAY 7, 2010	APPROVED FOR USE BY VAOT STRUCTURES SECTION
AUGUST 29, 2011	ADD DETAIL "B" AND REV. NOTES

BRIDGE JOINT
ASPHALTIC PLUG

VERMONT AGENCY OF TRANSPORTATION
STRUCTURES - DIVISION

STRUCTURES DETAIL

SD-516.10

STRUCTURAL STEEL GENERAL NOTES:

1. ALL FIELD CONNECTIONS SHALL BE MADE WITH 7/8" DIAMETER HIGH-STRENGTH BOLTS IN 15/16" DIAMETER HOLES, PER SUBSECTION 506.19, UNLESS OTHERWISE SPECIFIED.
2. ALL HOLES IN THE WEBS OF THE FASCIA GIRDERS THAT ARE NOT OTHERWISE FILLED, SHALL BE FILLED WITH EITHER BUTTON HEAD OR HEX HEAD BOLTS. THESE BOLTS SHALL BE TIGHTENED IN ACCORDANCE WITH SUBSECTION 506.19.
3. ALL WELDING SHALL CONFORM TO THE PROVISIONS OF SUBSECTION 506.10.
4. ANY CONNECTIONS THAT ARE NOT DETAILED ON THE PLANS SHALL BE DETAILED BY THE FABRICATOR AND SUBMITTED TO THE STRUCTURES ENGINEER FOR APPROVAL.
5. STRUCTURAL STEEL MEMBERS DESIGNATED "CVN" IN THE PLANS SHALL BE CHARPY V-NOTCH TESTED IN ACCORDANCE WITH SUBSECTION 714.01 OF THE STANDARD SPECIFICATIONS.
6. ENDS OF GIRDERS ARE TO BE VERTICAL IN THEIR FINAL POSITION.
7. AFTER SUPERSTRUCTURE STEEL HAS BEEN ERECTED, ELEVATIONS ALONG THE TOP OF THE GIRDERS SHALL BE TAKEN AS DIRECTED BY THE RESIDENT ENGINEER FOR USE IN DETERMINING FINISHED GRADES.

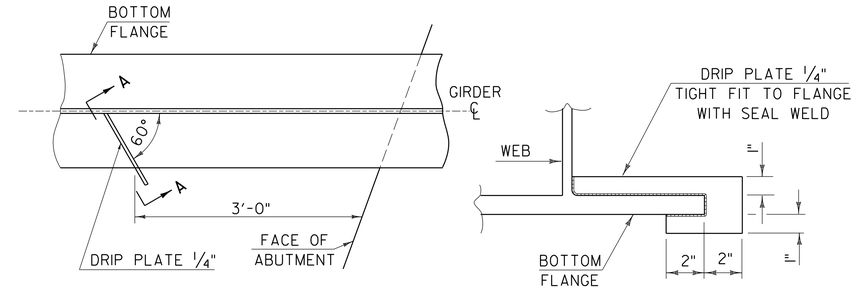

PLAN DRIP PLATE

SECTION A - A

NOTE: DRIP PLATES SHALL BE PLACED ON OUTSIDE EDGE OF FASCIA GIRDERS ON THE HIGH SIDE OF ALL PIERS AND ABUTMENTS OR AS INDICATED ON PROJECT PLANS.

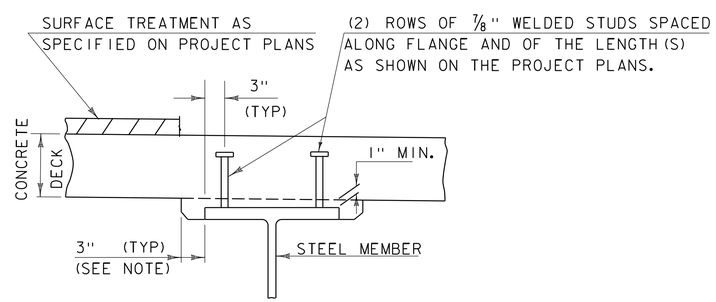

NOTE:
THE 3" HORIZONTAL SECTION MAY BE ELIMINATED FOR FORMING SYSTEMS DESIGNED FOR THE CONSTRUCTION OF VERTICAL HAUNCHES. ANY VOIDS RESULTING FROM FORMING SYSTEM ELEMENTS SHALL BE FILLED WITH JOINT SEALER, POLYURETHANE MEETING THE REQUIREMENTS OF SECTION 524. THE COST OF THE JOINT SEALER, POLYURETHANE SHALL BE INCIDENTAL TO THE ADJACENT CONCRETE.

HAUNCH AND SHEAR CONNECTOR DETAIL

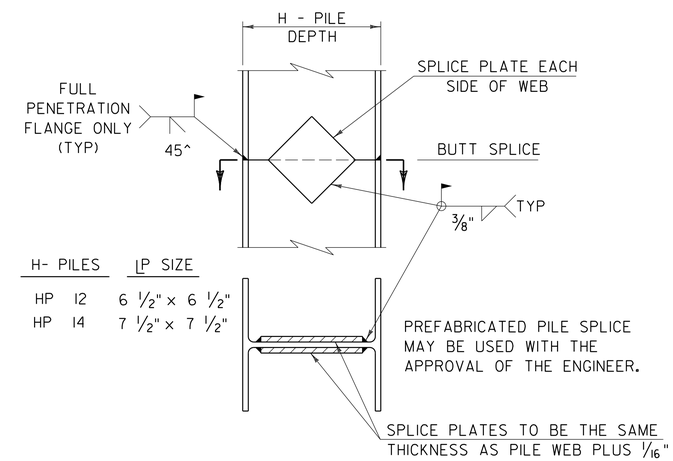

DETAIL OF PILE SPLICE

DETAILS ON THIS SHEET ARE "NOT TO SCALE" UNLESS NOTED OTHERWISE.

REVISIONS	
MAY 7, 2010	APPROVED FOR USE BY VAOT STRUCTURES SECTION
JUNE 4, 2010	MODIFIED NOTES

STRUCTURAL STEEL DETAILS & NOTES

VERMONT AGENCY OF TRANSPORTATION
STRUCTURES - SECTION

STRUCTURES DETAIL

SD-601.00

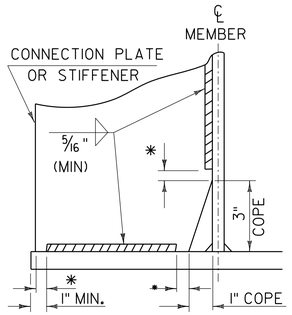

WELD TERMINATION AND COPING DETAILS FOR STEEL MEMBERS

*NO WELD FOR 3/8" MIN. 7/8" MAX. (EXCEPT MUST MAINTAIN 1" MINIMUM FROM EDGE OF FLANGE)

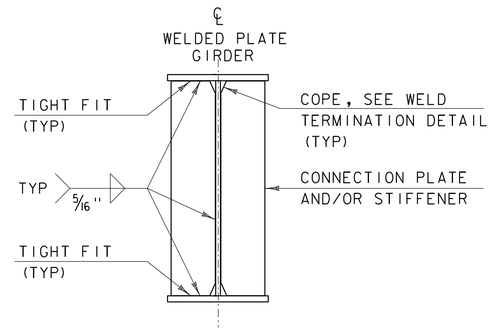

INTERMEDIATE CONNECTION PLATES AND/OR STIFFENERS FOR WELDED PLATE GIRDERS

INTERMEDIATE DETAIL IS ONLY USED WHEN PLATE DOES NOT OCCUR AT AN ABUTMENT OR PIER.

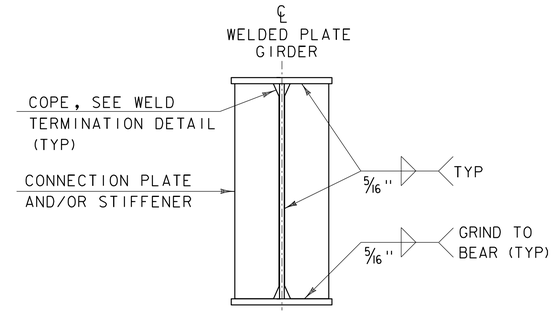

ABUTMENT BEARING STIFFENERS AND/OR CONNECTION PLATES FOR WELDED PLATE GIRDERS

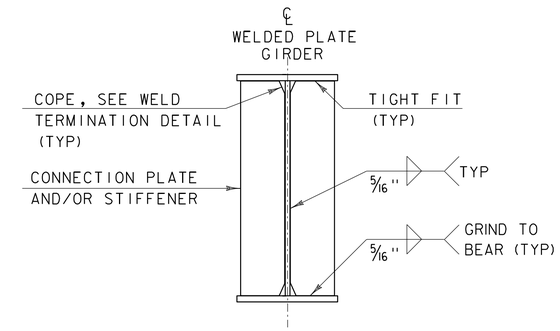

PIER BEARING STIFFENERS AND/OR CONNECTION PLATES FOR WELDED PLATE GIRDERS

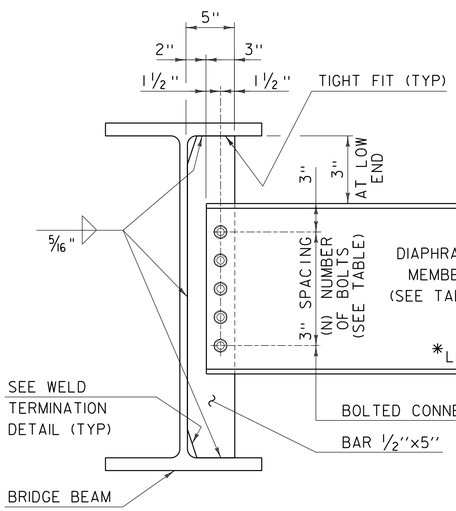

DEPTH		DIAPHRAGM MEMBER	(N) BOLTS
ROLLED BEAM	24" 30"	C15x33.9	4
	31" 36"	MC18x42.7	5
	37" 42"	W21x44	6
PLATE GIRDER WEB	31" 36"	W27x84	7
	37" 42"	W33x118	9
	43" 48"	W36x135	10

INTERMEDIATE DIAPHRAGMS FOR 24" TO 48" BRIDGE BEAMS

* IF CLEARANCE CANNOT BE MET, DIAPHRAGM MAY BE SLOPED.

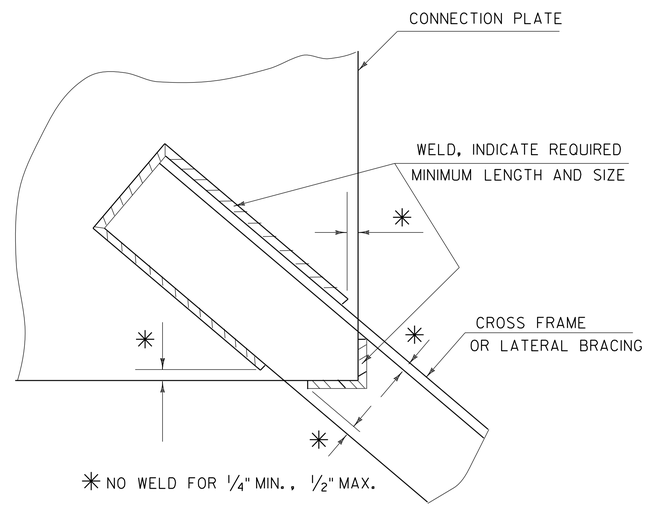

WELD LOCATION DETAIL AT CROSS FRAMES AND LATERAL BRACING

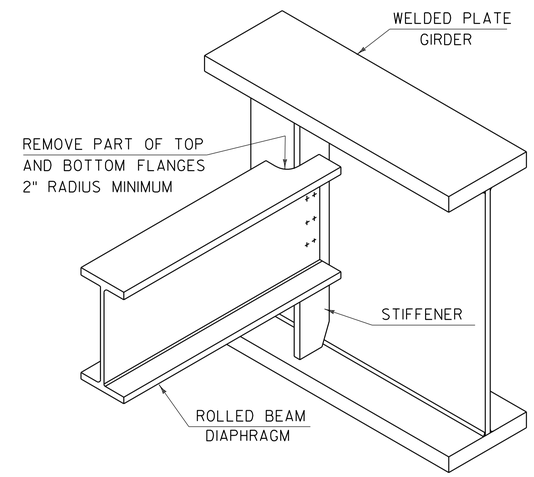

SEE CONTRACT DRAWINGS FOR SIZES OF MEMBERS AND CONNECTION DETAILS

ROLLED BEAM USED AS DIAPHRAGM

DETAILS ON THIS SHEET ARE "NOT TO SCALE" UNLESS NOTED OTHERWISE.

REVISIONS	
MAY 7, 2010	APPROVED FOR USE BY VAOT STRUCTURES SECTION
MAY 2, 2011	ADD INTERMEDIATE DIAPHRAGMS DETAIL & ADD NOT TO SCALE NOTE

STRUCTURAL STEEL PLATE GIRDER DETAILS AND NOTES

VERMONT AGENCY OF TRANSPORTATION * STRUCTURES - SECTION *

STRUCTURES DETAIL

SD-602.00

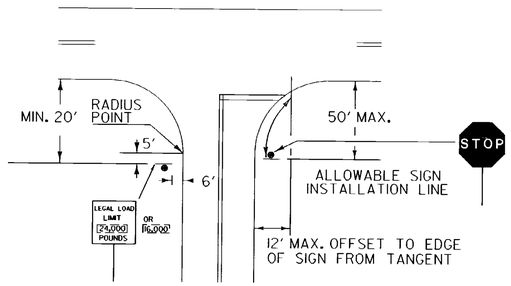

STOP SIGN SHALL BE PLACED ON DRIVERS RIGHT, MAINTAINING MAXIMUM VISIBLITY. CLEARANCE SHALL BE A MINIMUM OF 6' AND A MAXIMUM OF 50' FROM EDGE LINE OF INTERSECTING ROADWAY AND DOES NOT HAVE TO BE ADJACENT TO THE STOP BAR.

LEGAL LOAD LIMIT AND STOP SIGNS AT INTERSECTIONS WITH TOWN HIGHWAYS

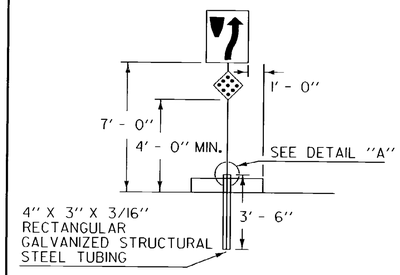

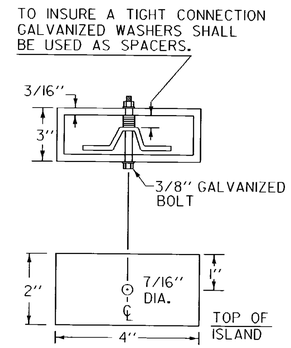

SLEEVE DETAIL "A"

SIGNS ON MEDIAN ISLANDS IN THE LINE OF TRAFFIC

INCREASE VERTICAL CLEARANCE TO 7' IN AREAS OF FREQUENT ROADSIDE PARKING OR PEDESTRIAN ACTIVITY

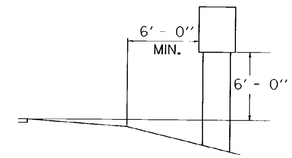

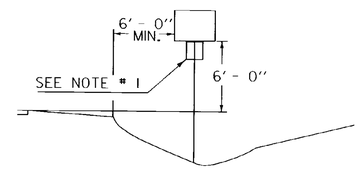

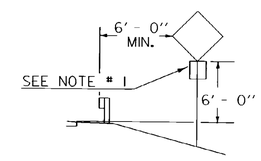

RURAL

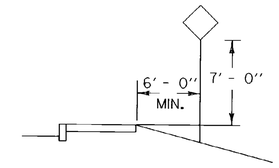

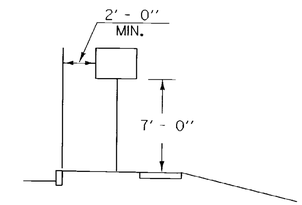

IF SUFFICIENT CLEARANCE IS NOT AVAILABLE BETWEEN CURB AND SIDEWALK MOUNT SIGN BEHIND SIDEWALK AS SHOWN AT TOP. CHECK FOR ADEQUATE R.O.W..

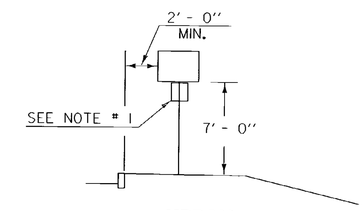

URBAN

NOTES:

1. IN BOTH RURAL AND URBAN LOCATIONS. IF A SECONDARY SIGN IS MOUNTED BELOW ANOTHER SIGN, THE MINIMUM CLEARANCE MAY BE REDUCED BY ONE FOOT.
2. IN RURAL AREAS WITH NO OR MINIMAL SHOULDER, THE LATERAL CLEARANCE TO THE EDGE OF A SIGN SHOULD BE A MINIMUM OF 12' FROM THE EDGE OF THE TRAVELED WAY.
3. ALSO SEE OTHER STANDARD SHEETS FOR MOUNTING CLEARANCE AND SPACING OF DESTINATION AND ROUTE MARKER ASSEMBLIES AND TOWN LINE SIGNS.

POST REFERENCE:

REFER TO THE DETAILS ON THE APPROPRIATE STANDARD DRAWING FOR INFORMATION CONCERNING THE PROPER MOUNTING OF SIGNS ON APPROPRIATE POSTS.

OTHER STDS. REQUIRED: **E-160** **E-161** **E-162** **E-163** **E-164**

REVISIONS AND CORRECTIONS

JAN. 23, 1995 - DATE OF ORIGINAL ISSUE

AUG. 08, 1995 - VARIOUS MINOR NOTE REVISIONS

APPROVED FOR THIS PROJECT AND/OR DESIGN IMPLEMENTATION. FHWA FINAL APPROVAL PENDING.

APPROVED

Gordon S. MacArthur
DIRECTOR OF ENGINEERING

David A. Ross
TRAFFIC AND SAFETY ENGINEER

STANDARD SIGN PLACEMENT CONVENTIONAL ROAD

/traf/std/stdel21.dgn : stdel21.i

VERMONT AGENCY OF TRANSPORTATION

STANDARD

E-121

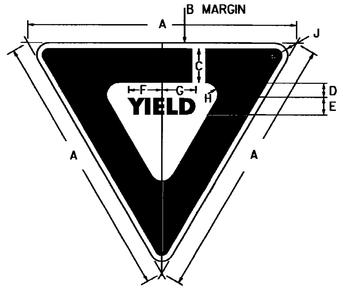

COLORS
LEGEND AND BORDER - RED (REFL)
BACKGROUND - WHITE (REFL)
ENCAPSULATED LENS

R1-2

SIGN	DIMENSIONS (INCHES)								
	A	B	C	D	E	F	G	H	J
BIKE.	24	3/8	3	1 3/8	2C	3 1/4	3	7/8	1 1/2
MIN.	30	5/8	4	1 3/4	2 1/2C	3 5/16	3 5/8	7/8	1 1/2
STD.	36	3/4	5	2	3C	4 11/16	4 3/8	1 1/4	2
EXPWY.	48	1	6	2 3/4	4C	6 1/4	5 7/8	2	3
SPECIAL	60	1 1/2	8	3 1/2	5C	7 7/8	7 1/4	2 1/2	4

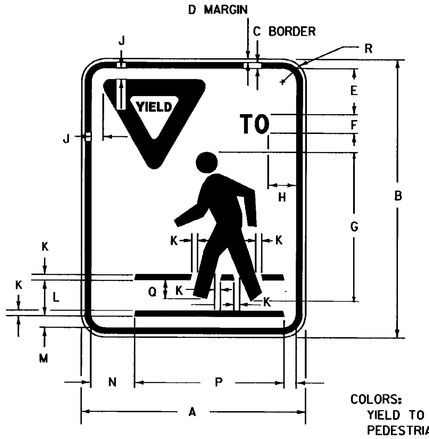

VR-004A

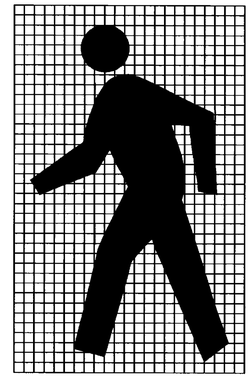

COLORS:
YIELD TO PEDESTRIAN SIGNS HAVE A BLACK PEDESTRIAN SYMBOL, BLACK TEXT, A BLACK BORDER AND A REFLECTORIZED RED YIELD SYMBOL ON A REFLECTORIZED WHITE BACKGROUND

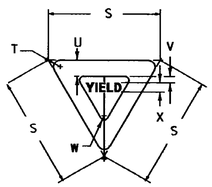

SIGN	DIMENSIONS (INCHES)										
	A	B	C	D	E	F	G	H	J	K	L
STD.	24	30	5/8	3/8	5	2D	12	2 1/4	15/16	5/8	3 1/4
SIGN	M	N	P	Q	R	S	T	U	V	W	X
STD.	1 1/4	4 3/4	16	2	1 1/2	12	3/4	1 3/4	11/16	7/16	1D

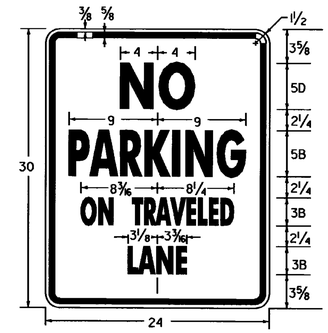

COLORS
LEGEND - RED (REFL.)
BACKGROUND - WHITE (REFL.)

VR - 020

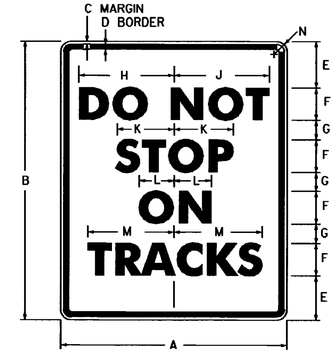

R8-8

SIGN	DIMENSIONS (INCHES)												
	A	B	C	D	E	F	G	H	J	K	L	M	N
STD.	24	30	3/8	5/8	3 5/8	4D	2 1/4	9 1/4	9 5/8	6 9/16	3 1/2	10	1 1/2
SPECIAL	36	48	5/8	7/8	6	6D	4	14	14 7/16	9 3/4	5 1/4	15	2 1/4
SPECIAL	48	60	3/4	1 1/4	7 1/4	8D	4 1/2	18 1/2	19 1/4	13 1/8	7	20	3

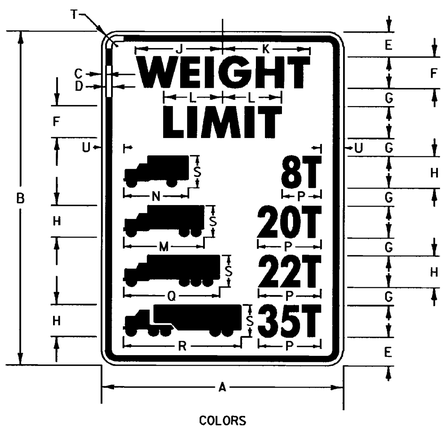

COLORS
LEGEND - BLACK (NON-REFL.)
BACKGROUND - WHITE (REFL.)

VR-015

SIGN	DIMENSIONS (INCHES)																	
	A	B	C	D	E	F	G	H	J	K	L	M	N	P	Q	R	S	T	U
MIN.	24	36	3/8	5/8	2 3/4	3E	2 1/2	3C	7 7/8	8 3/8	5 3/4	7 1/4	6	var	9 1/2	11	3	1 1/2	2 1/2
STD.	30	42	1/2	3/4	3 3/8	4E	2 1/4	4C	10 1/2	11 1/8	7 3/8	10	8	var	12	14 5/8	4	1 7/8	2 3/4
EXPWY.	36	54	5/8	7/8	3 7/8	5E	3 1/4	5C	13 1/8	14	9 1/8	12 1/2	10	var	15	18 3/8	5	2 1/4	3
FWY.	48	66	3/4	1 1/4	3 3/4	6E	4 1/2	6C	15 3/4	16 3/4	11 1/2	16	12	var	18	22	6	3	5

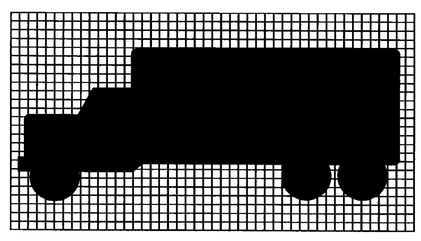

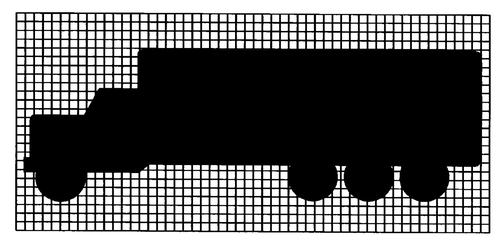

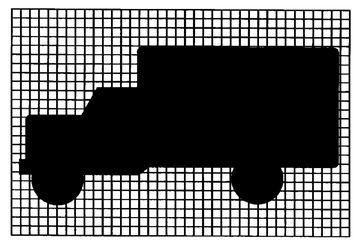

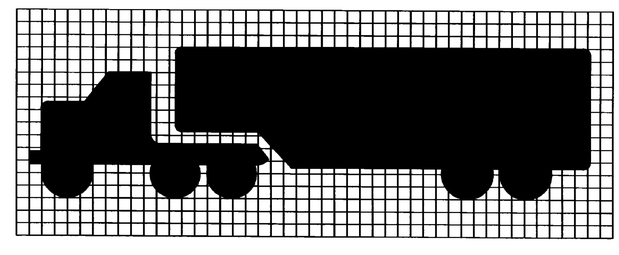

GENERAL:

1. ALL DIMENSIONS IN INCHES.

COLORS:

THE REGULATORY SIGNS SHOWN ON THIS SHEET SHALL BE AS DETAILED FOR EACH SIGN. THE COLORS SHALL CONFORM WITH THE COLORS ADOPTED BY THE AMERICAN ASSOCIATION OF STATE HIGHWAY AND TRANSPORTATION OFFICAILS AND APPROVED BY THE DEPARTMENT OF TRANSPORTATION, FEDERAL HIGHWAY ADMINISTRATION.

MATERIALS:

THE SIGN BASE MATERIALS USED FOR REGULATORY SIGNS SHOWN ON THIS SHEET MAY BE ANY OF THE FOLLOWING OF THE MINIMUM THICKNESS NOTED.

	24'' ▽ 30'' ▽ 24'' X 30'' 24'' X 36'' 30'' X 42''	36'' ▽ 36'' X 48'' 36'' X 54'' 48'' X 60'' 48'' X 66''	48'' ▽ 60'' ▽
FLAT SHEET ALUMINUM	0.080''	0.100''	0.125''
HIGH DENSITY OVERLAID PLYWOOD	1/2''	5/8''	5/8''
GALVANIZED FLAT SHEET STEEL	16 GAGE	14 GAGE	12 GAGE

THE REFLECTIVE MATERIAL FOR GROUND MOUNTED SIGNS SHALL BE FLAT TOP WHITE REFLECTIVE SHEETING APPLIED TO THE ENTIRE BACKGROUND OF THE SIGN.

TEXT OF THE SIGNS MAY BE LETTERING FILM, SILK SCREENED OR HAND PAINTED. WHEN HAND PAINTED, POOR WORKMANSHIP SHALL BE CAUSE FOR REJECTION.

SPECIFICATIONS:

REGULATORY SIGNS SHALL MEET THE VERMONT STANDARD SPECIFICATIONS FOR 'TRAFFIC SIGNS.'

TEXT DESIGN:

LETTERS, DIGITS, ARROWS, SPACING AND TEXT DIMENSIONS SHALL CONFORM WITH THE 'STANDARD ALPHABET FOR HIGHWAY SIGNS AND PAVEMENT MARKINGS' AND DESIGNS PRESCRIBED IN THE STANDARD HIGHWAY SIGNS AS SPECIFIED IN THE MANUAL ON UNIFORM TRAFFIC CONTROL DEVICES ADOPTED BY THE U.S. DEPARTMENT OF TRANSPORTATION AND FEDERAL HIGHWAY ADMINISTRATION.

OTHER STDS. : NONE REQUIRED

REVISIONS AND CORRECTIONS

SEPT. 20, 1995 - DATE OF ORIGINAL ISSUE

APPROVED FOR THIS PROJECT AND/OR DESIGN IMPLEMENTATION. FHWA FINAL APPROVAL PENDING.

APPROVED

DIRECTOR OF ENGINEERING

TRAFFIC AND SAFETY ENGINEER

REGULATORY SIGN DETAILS

/traf/std/stdel46.dgn : stdel46.1

VERMONT AGENCY OF TRANSPORTATION

STANDARD

E-146

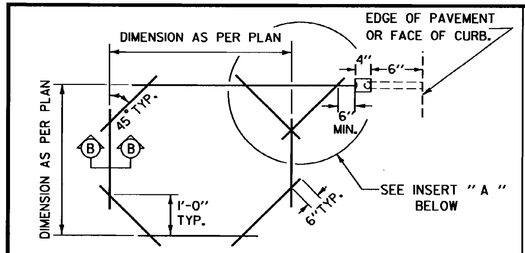

VEHICLE DETECTOR LOOP LAYOUT DETAIL

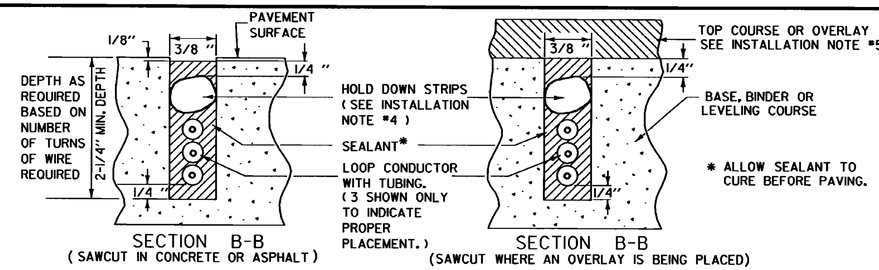

LOOP SAWCUT DETAIL

LONG LOOPS

LOOP INDUCTANCE DESIGN TABLE

LENGTH OF LOOP (FEET)	LOOP INDUCTANCE (MICROHENRIES) WIDTH OF LOOP 6 FEET 1 TURN	6 FEET 2 TURNS	6 FEET 3 TURNS	8 FEET 1 TURN	8 FEET 2 TURNS	8 FEET 3 TURNS
10	-	98	206	-	104	218
15	-	138	291	-	144	303
20	-	178	376	-	184	388
25	-	218	461	-	224	473
30	-	258	546	-	264	558
35	-	298	-	-	304	-
40	106	338	-	108	344	-
45	118	378	-	120	384	-
50	131	418	-	133	424	-
55	143	458	-	145	464	-
60	156	498	-	158	504	-
65	168	538	-	170	544	-
70	181	578	-	183	584	-

NOTE:

1. THE ABOVE INDUCTANCES ARE ESTIMATED VALUES USING THE FOLLOWING EQUATIONS.

   1 TURN = (PERIMETER X 0.5) + (LOOP LENGTH X 1.5)
   2 TURN = (PERIMETER X 1.5) + (LOOP LENGTH X 5.0)
   3 TURN = (PERIMETER X 3.0) + (LOOP LENGTH X 11.0)

2. SEE NOTES #1 & 3 UNDER THE RECTANGULAR LOOP TABLE.

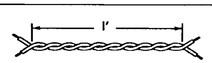

MINIMUM 5 TWISTS PER FOOT.
BOTH WIRES SHALL BE TWISTED

WIRE TWIST DETAIL

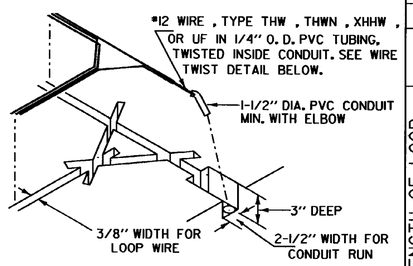

INSERT "A" LAYOUT DETAIL

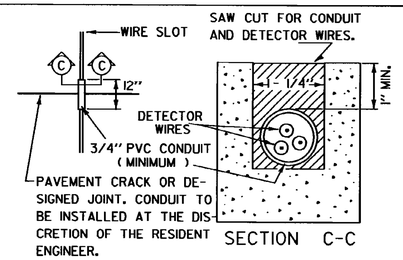

DETECTOR WIRE ACROSS CRACKS OR JOINTS

RECTANGULAR LOOPS

LOOP INDUCTANCE DESIGN TABLE

LENGTH OF LOOP (FEET)	WIDTH OF LOOP 4 FEET	6 FEET	8 FEET	10 FEET	LOOP PERIMETER (FT.)	LOOP INDUCTANCE (MICROHENRIES) 2 TURNS K=.42	3 TURNS K=.38	4 TURNS K=.36	5 TURNS K=.33
	8	6	-	-	24	40	82	138	198
	10	8	-	-	28	47	96	161	231
	12	10	8	-	32	54	109	184	264
	14	12	10	-	36	60	123	207	297
	16	14	12	10	40	67	137	230	330
	18	16	14	12	44	74	151	254	367
	20	18	16	14	48	81	164	277	396
	22	20	18	16	52	87	178	300	429
	24	22	20	18	56	94	192	323	462
	26	24	22	20	60	101	205	346	495
	28	26	24	22	64	108	219	369	-
	30	28	26	24	68	114	232	392	-
	32	30	28	26	72	121	246	415	-
	34	32	30	28	76	128	260	438	-
	37	35	33	31	82	138	280	472	-
	42	40	38	36	92	155	315	530	-

NOTE:

1. TO THE ABOVE LOOP INDUCTANCES, ADD 25 MICROHENRIES FOR EACH 100 FEET OF LEAD-IN CABLE FROM THE PAVEMENT LOOP TO THE CONTROLLER CABINET. LOOP LEAD-IN LENGTH SHALL NOT EXCEED 750 FEET.

2. THE FORMULA USED FOR THE TABLE ABOVE IS INDUCTANCE (L) = KPN^2.
   WHERE $K = \frac{5}{10+N}$, N = NO. OF TURNS, P = LOOP PERIMETER

3. WHEN LOOPS ARE CONNECTED IN SERIES (PREFERRED FOR SMALL LOOPS), THE TOTAL INDUCTANCE BECOMES THE SUM OF ALL INDUCTANCES. WHEN LOOPS ARE CONNECTED IN PARALLEL (PREFERRED FOR LONG LOOPS), THE COMBINED INDUCTANCE CAN BE CALCULATED FROM THE FOLLOWING EQUATION.

$$L_P = \left[\frac{1}{\frac{1}{L_1}+\frac{1}{L_2}+\frac{1}{L_3}\ldots\ldots}\right] + \text{LOOP LEAD-IN INDUCTANCES.}$$

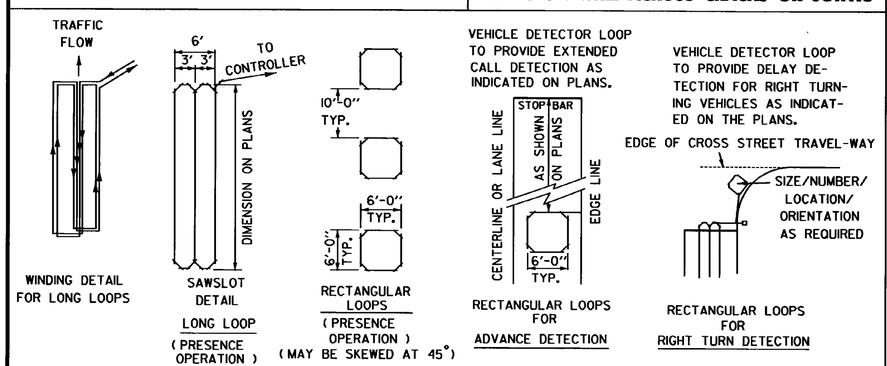

TYPICAL LOOP DESIGNS

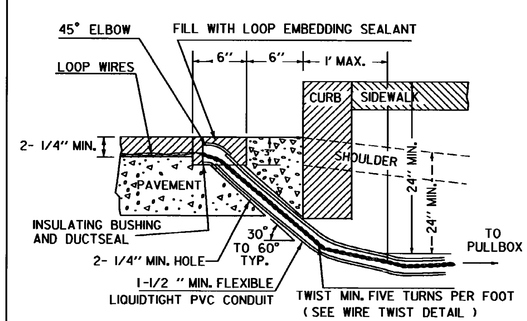

CONDUIT DETAIL FOR LOOP LEAD-IN TO CONTROLLER / PULL BOX

GENERAL NOTES

1. THE TERM "VEHICLE DETECTOR LOOP" SHALL REFER TO THE SENSOR EQUIPMENT EMBEDDED IN THE PAVEMENT WHICH SENSES VEHICLE PASSAGE OR PRESENCE. THE TERM "CABINET AMPLIFIER" SHALL REFER TO THE ELECTRICAL OR ELECTRONIC DEVICE LOCATED IN THE CONTROLLER CABINET WHICH RESPONDS DIRECTLY TO A VEHICLE ACTUATION AND INTERFACES WITH THE CONTROLLER.
2. WHEN THE DISTANCE FROM THE SAWCUT TO THE CONTROLLER EXCEEDS 25 FEET, SHIELDED CABLE SHALL BE USED TO EXTEND LOOP LEAD-INS FROM A JUNCTION BOX, PULLBOX OR POLE BASE TO THE CABINET. IT SHALL MEET THE REQUIREMENTS OF ISMA SPEC. NO. 50-2.
3. VEHICLE DETECTOR LOOP SHALL BE INSTALLED IN SUCH A WAY AS TO MAXIMIZE SENSITIVITY AND BE CAPABLE OF DETECTING MOTORCYCLES AND BICYCLES, WHILE ELIMINATING FALSE CALLS FROM VEHICLES IN ADJACENT LANES. LOOPS SHOULD BE DESIGNED SO THAT THE TOTAL INDUCTANCE [LOOP(S) PLUS LEAD-IN(S)] AT THE AMPLIFIER IS BETWEEN 100 AND 450 MICROHENRIES (200-300 PREFERRED). FOR SINGLE LOOPS, THE LOOP INDUCTANCE SHOULD BE AT LEAST TWICE THAT OF THE LEAD-IN. FOR MULTIPLE LOOPS, THE INDUCTANCE ON THE STREET SIDE OF THE SPLICE SHOULD BE AT LEAST TWICE THAT ON THE CONTROLLER SIDE.
4. THE LOOPS SHALL BE CENTERED IN THEIR RESPECTIVE LANES, UNLESS OTHERWISE NOTED.
5. ALL LOOPS SHALL OPERATE IN THE PRESENCE MODE WITH THE CONTROLLER SET TO LOCKING MEMORY FOR "LEFT-ONLY" OR "THRU-ONLY" LANES. ALL OTHER LANES SHALL UTILIZE NON-LOCKING MEMORY, UNLESS OTHERWISE NOTED.
6. ALL LOOPS IN "RIGHT TURN ONLY" LANES OR LOOP PLACED TO DETECT ONLY RIGHT TURNING VEHICLES SHALL HAVE DELAYED CALL LOOP AMPLIFIERS, UNLESS OTHERWISE NOTED.
7. ALL LOOP DETECTORS SHALL BE OF A TYPE THAT FAIL IN THE "ON" MODE.
8. ALL LOOP AND LEAD-IN WIRE SHALL BE #12 AWG. THE RESISTANCE OF #12 AWG IS 1.62 OHMS / 1000' AT 77° F.

INSTALLATION NOTES

1. ALL SPLICES SHALL BE MADE IN PULLBOXES, JUNCTION BOXES, OR POLE BASES. ALL SPLICES SHALL BE SOLDERED, USING ROSIN CORE SOLDER, AND THEN BE FULLY SEALED BY THE APPLICATION OF DUAL-WALL, HEAT-SHRINKABLE TUBING, UNLESS OTHERWISE NOTED. A MINIMUM OF 3' OF SLACK SHALL BE LEFT IN EACH CABLE IN EACH BOX OR BASE.
2. ALL LOOP WIRES SHALL BE INSTALLED IN PVC TUBING. THE TUBING ENDS SHALL BE SEALED USING LOOP SEALANT PRIOR TO INSTALLATION IN THE SAWCUT.
3. BEFORE LAYING IN THE LOOP WIRE, A ONE-QUARTER INCH BEAD OF SEALANT SHALL BE PLACED IN THE SAWCUT AND ALLOWED TO SET UP SUFFICIENTLY TO GIVE THE WIRE SOME SUPPORT. EACH WIRE SHALL BE EASED INTO THE SAWCUT WITH A BLUNT WOODEN STICK.
4. THE LOOP WIRES SHALL BE HELD IN PLACE DURING INSTALLATION BY SHORT STRIPS OF POLYETHYLENE FOAM SEALANT BACKERS. THE STRIPS SHALL BE ABOUT 2" LONG AND PLACED EVERY 2 FEET. THEY ARE TO REMAIN IN PLACE WHEN THE SLOT IS SEALED.
5. VEHICLE DETECTOR LOOPS SHALL BE PLACED IN SAWCUTS IN THE PAVEMENT COURSE IMMEDIATELY BELOW THE WEARING SURFACE AND PAVED OVER WHENEVER POSSIBLE. IF THE WEARING SURFACE IS MORE THAN 1-3/4" IN DEPTH, THE SAWCUT SHALL BE MADE AFTER THE WEARING SURFACE IS PLACED. IF PAVING IS NOT PART OF THE PROJECT, THE SAWCUT SHALL BE MADE IN EXISTING PAVEMENT.
6. WHEN LOOP WIRES ARE PLACED BELOW THE WEARING SURFACE, THE SEALANT SHALL BE PROPERLY CURED BEFORE THE FINAL PAVEMENT IS PLACED.
7. LOOP LEAD-INS FROM ADJACENT LOOPS ACTUATING DIFFERENT PHASES SHALL BE IN SEPARATE SAWCUTS AND CONDUITS TO THE PULLBOX OR POLE BASE.
8. LOOP LEAD-INS SHALL BE KEPT AT LEAST ONE FOOT AWAY FROM POWER WIRING, WHENEVER POSSIBLE.
9. ALL ELECTRICAL WORK AND MATERIALS SHALL MEET THE REQUIREMENTS OF THE NATIONAL ELECTRIC CODE.
10. LOOP WIRES FROM EACH LOOP AND/OR APPROACH SHALL BE COLOR CODED OR OTHERWISE IDENTIFIED AT EACH PULLBOX OR JUNCTION BOX, IN THE POLE BASE(S) AND AT THE TERMINAL BOARD IN THE CONTROLLER CABINET. FOLLOWING INSTALLATION, THE CONTRACTOR SHALL SUPPLY 2 COPIES OF A SCHEMATIC SHOWING THE FOLLOWING INFORMATION.
    1. NUMBER OF TURNS.
    2. DIMENSIONS FOR EACH LOOP.
    3. LOOP LEAD-IN ROUTING FROM THE SAWCUT TO THE CONTROLLER.
    4. TYPE OF CONNECTIONS AT EACH SPLICE (SERIES, PARALLEL OR SERIES-PARALLEL).

    ONE COPY SHALL BE LEFT IN THE CONTROLLER CABINET AND THE OTHER GIVEN TO THE TRAFFIC SHOP OR LOCAL OFFICIAL RESPONSIBLE FOR THE SIGNAL MAINTENANCE.

LOOP TESTING

DURING INSTALLATION OF THE LOOPS, THE CONTRACTOR SHALL MEASURE THE LOOP INDUCTANCE, LEAKAGE TO GROUND AND LOOP RESISTANCE IN THE PRESENCE OF THE RESIDENT ENGINEER. THE CONTRACTOR SHALL PROVIDE THE APPROPRIATE EQUIPMENT. THE INSTALLATION SHALL BE CONSIDERED ACCEPTABLE IF:

1. THE INDUCTANCE READING IS WITHIN 10% ± OF THE CALCULATED VALUE.
2. THE INSULATION TEST (LEAKAGE TO GROUND) IS ABOVE 5 MEGOHMS FOR EXISTING LOOPS AND 100 MEGOHMS FOR NEW LOOPS USING A 500 VOLT DC INPUT.
3. THE LOOP RESISTANCE IS WITHIN 25% ± OF THE CALCULATED VALUE.

IF THE READINGS FALL OUTSIDE THE ABOVE RANGES, CORRECTIVE MEASURES MAY BE REQUIRED AND THE ENGINEER SHALL NOTIFY THE TRAFFIC AND SAFETY DIVISION. THE COST OF TESTING THE LOOPS AND ANY NECESSARY CORRECTIONS SHALL BE SUBSIDIARY TO THE ITEM "VEHICLE DETECTOR LOOP". THE CALCULATED VALUES SHALL BE SHOWN ON THE PLANS. LOOP TESTING IS NOT REQUIRED FOR TEMPORARY LOOPS.

CONDUIT FILL DESIGN VALUES

AVAILABLE CONDUIT AREA: SIZE I.D.	SIZE O.D.	26 % FILL (IN²)
1"	1.315	0.23
1-1/4"	1.660	0.39
1-1/2"	1.900	0.53
2"	2.375	0.87
2-1/2"	2.875	1.24
3"	3.500	1.92
3-1/2"	4.000	2.57
4"	4.500	3.31

CONDUCTOR SIZE TABLE: NUMBER OF CONDUCTORS	CROSS SECTIONAL AREA (IN²) GAUGE #14	#12	#10	#8	#6
1	.021	.025	.031	.060	.082
2	.093	.129	CALCULATE AS REQUIRED		
5	.142	.200			
7	.170	.260			
9	.297	.413			
12	.317	.436			
16	.402	.601			
19	.425	.658			

OTHER STDS. REQUIRED NONE

REVISIONS AND CORRECTIONS

SEPT. 10, 1987 - DATE OF ORIGINAL ISSUE
NOV. 17 1993 - MAJOR NOTE & TABLE REVISIONS
AUG. 9, 1995 - REVISED INSTALLATION NOTES 5 & 6. TYP. LOOP DESIGN & MINOR CHANGES

APPROVED FOR THIS PROJECT AND/OR DESIGN IMPLEMENTATION. FHWA FINAL APPROVAL PENDING.

APPROVED

Gordon D. McArthur
DIRECTOR OF ENGINEERING

David A. Ross
TRAFFIC AND SAFETY ENGINEER

VEHICLE DETECTOR LOOP DETAILS

/traf/std/stdel72.dgn - stdel72.1

VERMONT AGENCY OF TRANSPORTATION

STANDARD E-172

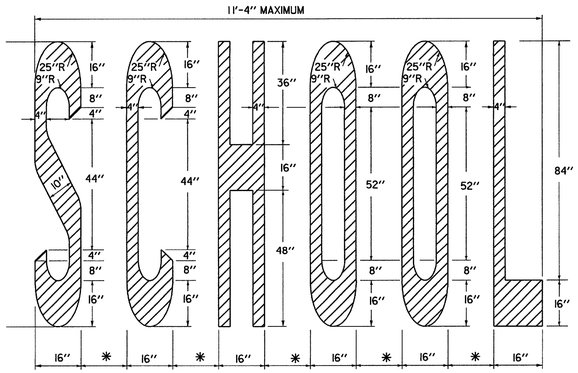

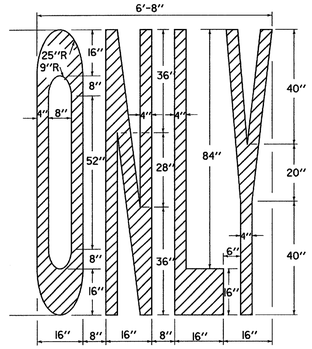

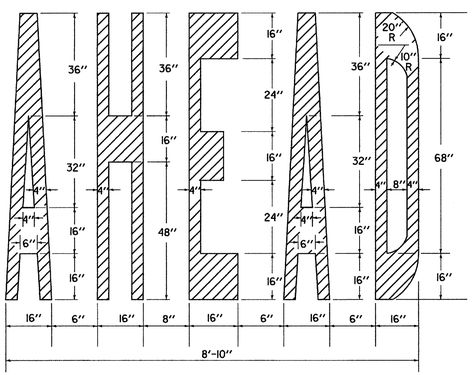

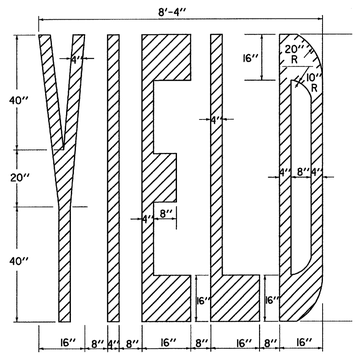

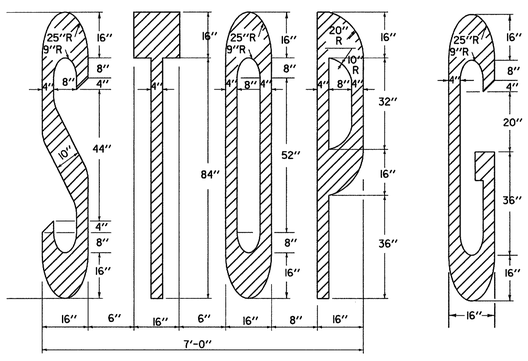

THE LETTER "G" PERTAINS TO THE WORD "SIGNAL" FOR OTHER LETTERS, SEE ABOVE.

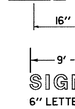

6" LETTER SPACING

LETTER HEIGHT

DIMENSIONS ARE FOR 8' - 4" LETTER HEIGHTS. A LESSER HEIGHT OF 8' - 0" IS ACCEPTABLE AS LONG AS THE DIMENSIONS ARE PROPORTIONAL TO THE DETAILS SHOWN SEE NOTE BELOW.

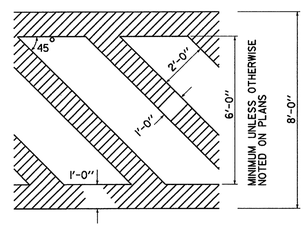

ARROWS AND WORD MARKINGS THAT CONFORM TO THE DIMENSIONS SHOWN ON THIS SHEET OR AS DETAILED IN THE BOOKLET ENTITLED "STANDARD ALPHABETS FOR HIGHWAY SIGNS AND PAVEMENT MARKINGS" AND THE "MANUAL ON UNIFORM TRAFFIC CONTROL DEVICES" (CURRENT EDITION) PREPARED BY THE FEDERAL HIGHWAY ADMINISTRATION WILL BE ACCEPTABLE.

LETTER IN WORD MARKING AND CROSSWALK DETAILS

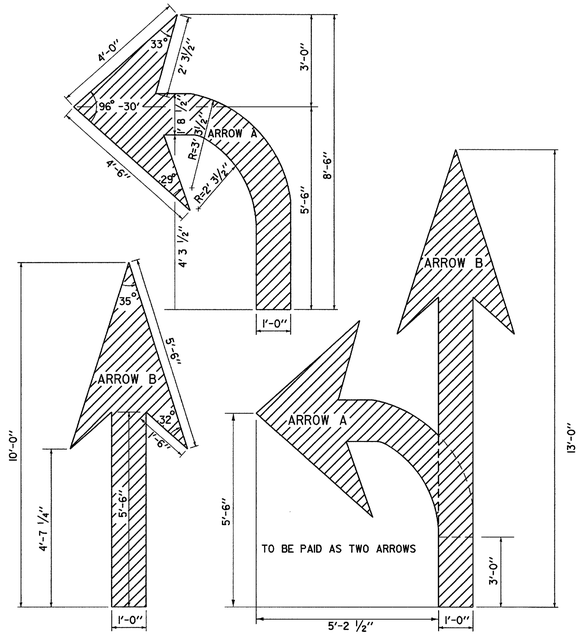

ARROW DETAILS

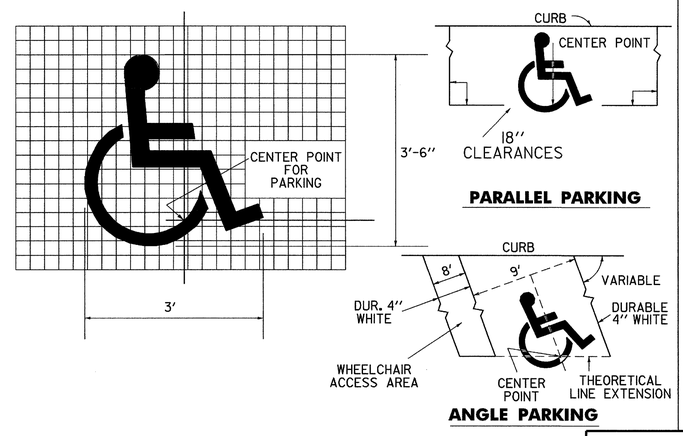

HANDICAPPED PAVEMENT MARKING DETAILS

THIS SHEET IS NOT TO SCALE

OTHER STDS. REQUIRED

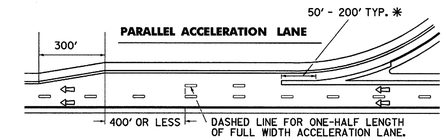

* USE LONGER LENGTH TO EMPHASIZE SITUATIONS WHERE THE CROSSING REQUIRES UNUSUAL CARE SUCH AS HIGH VOLUME MERGE AREAS.

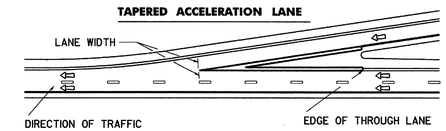

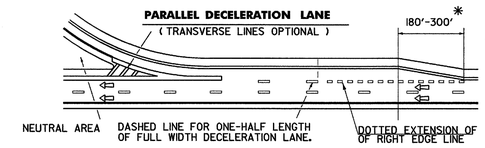

* SHORTER TAPERS GIVE A BETTER TARGET VALUE, HOWEVER ALIGNMENT MAY DICTATE A LONGER TAPER. RESIDENT ENGINEER SHALL ESTIMATE LENGTH.

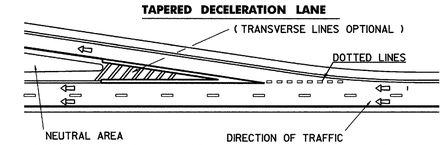

TRANSVERSE LINES SHALL CONSIST OF A WHITE LINE 2 TIMES WIDER THAN THE MAIN LINE MARKING WIDTH SPACED 5'-0" C-C AND SET AT 45° TO MAIN LINE EDGE LINES. THESE MARKINGS SHALL BE USED TO INCREASE VISIBILITY DUE TO DIFFICULT VERTICAL OR HORIZONTAL ALIGNMENT, AS DIRECTED BY THE RESIDENT ENGINEER.

RAMP MARKINGS

LEGEND

- WHITE LINES
- YELLOW LINES
- CHANNELIZATION WHITE LINES
- WHITE DOTTED LINES (2' SOLID - 4' GAP)
- DIRECTION OF TRAFFIC FLOW

IMPORTANT NOTE
ACTUAL LOCATION OF GORE MARKING TRANSITION CURVE MUST BE OFFSET FROM THE THEORETICAL RAMP EXTENSION LINE TO PROVIDE A VISUALLY SMOOTH RAMP ENTRANCE.

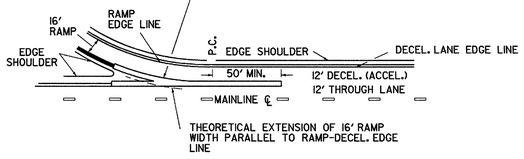

DETAIL - GORE MARKING TRANSITION CURVE

REVISIONS AND CORRECTIONS

SEPT. 10, 1987 - DATE OF ORIGINAL ISSUE
JAN. 23, 1989 - ADDED DOTTED LINES, "SIGNAL" DIMENSIONS, CLARIFIED LETTER HEIGHT.
AUG. 18, 1995 - MISC. NOTE CHANGES
FEB. 1, 1999 - CHANGED NOTES FOR ACCELERATION & DECELERATION LANES

APPROVED

Robert F. Stallmeyer Actng
DIRECTOR OF PROJECT DEVELOPMENT

PAVEMENT MARKING DETAILS

/traf/std/stdel91.dgn/stdel91.1

VERMONT AGENCY OF TRANSPORTATION

STANDARD E-191

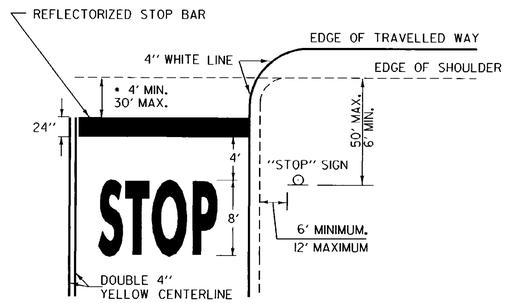

• THE "DESIRED STOPPING POINT" IS THE LOCATION BASED ON SITE CONDITIONS THAT BEST ALLOWS THE STOPPED VEHICLE TO VIEW THE APPROACHING TRAFFIC.

STOP BAR LAYOUT

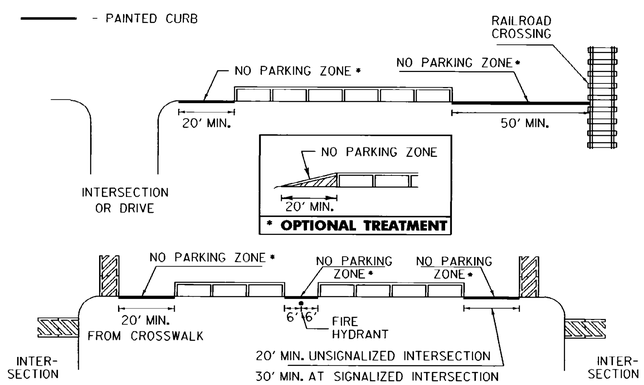

NO PARKING LAYOUT DETAILS

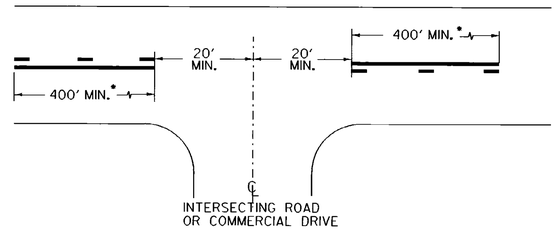

• THE SOLID LINE SHALL BE PAIRED WITH EITHER A SOLID OR DASHED LINE DEPENDING ON SIGHT DISTANCE AVAILABILITY IN THE OPPOSING DIRECTION. ADJUSTMENTS TO THE 40 FOOT CENTERLINE OPENING MAY BE MADE TO ACCOMMODATE SKEWED INTERSECTIONS.

CENTERLINE BREAKES:

A. AT ALL STATE HIGHWAYS AND TOWN HIGHWAYS, INCLUDING CLASS 4 TH'S. THAT HAVE STOP AND LEGAL LOAD LIMIT SIGNS INSTALLED

B. COMMERCIAL DRIVES:

1. WHERE A SEPERATE TURN LANE EXISTS ON THE MAIN LINE (LT. OR RT.)
2. SIGNIFICANT TRAFFIC VOLUMES EXISTS.
3. IF MOTORISTS NEED ASSISTANCE TO DEFINE ENTRANCE POINTS.

CENTERLINE LAYOUT

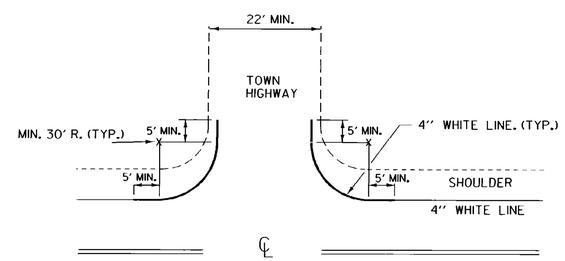

EDGELINES SHALL BE APPLIED TO ALL STATE HIGHWAYS AND SHOULD BE MAINTAINED AT A CONSTANT DISTANCE FROM THE CENTERLINE UNLESS PAVEMENT WIDTH INCREASES TO ALLOW WIDER LANES.

APPLY EDGELINE AS DETAILED ON ALL PAVED CLASS 1 & CLASS 2 TOWN HIGHWAYS AND ANY CLASS 3 TOWN HIGHWAY 22 FEET OR MORE IN WIDTH.

IF MIN. 30 FOOT RADIUS CANNOT BE OBTAINED, OR THE TOWN HIGHWAY IS NOT PAVED, BREAK THE EDGELINE USING AN 80 FOOT GAP AT INTERSECTION.

EDGELINE LAYOUTS

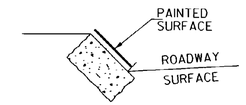

GRANITE SLOPE EDGING

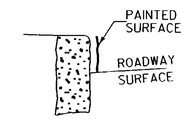

VERTICAL GRANITE CURB

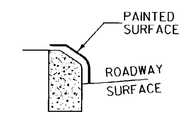

TYPE A (CONCRETE)

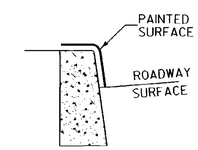

TYPE B (CONCRETE)

PAINTED CURB

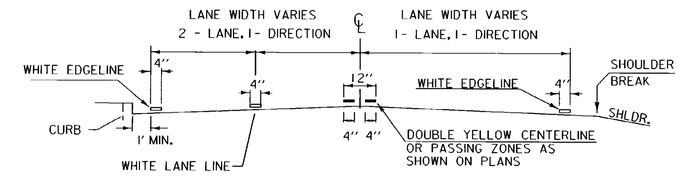

PAVEMENT MARKING PLACEMENT DETAIL

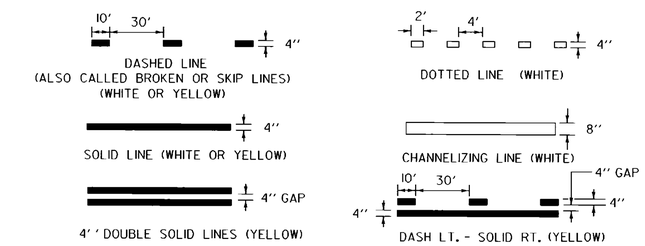

PAVEMENT MARKING LINE DETAILS

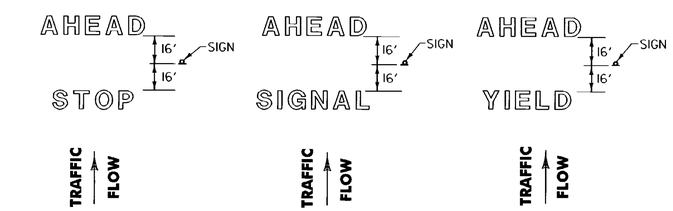

LETTER IN WORD MARKING SPACING DETAIL

NOTE: SINGLE WORDS CENTERED ON SIGN ie: SCHOOL OR YIELD

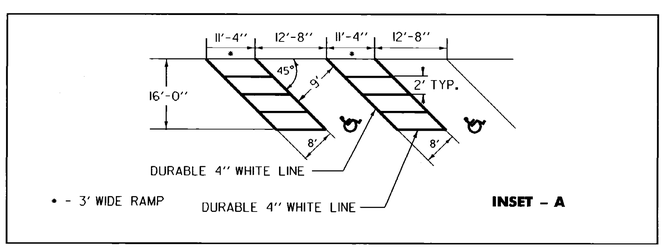

INSET - A

NOTE:

SEE STANDARD SHEET E-191 FOR HANDICAP SYMBOL POSITIONING AND DETAIL.

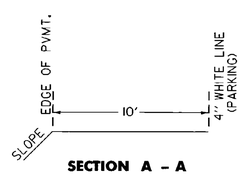

SECTION A - A

TRUCK PARKING DETAIL

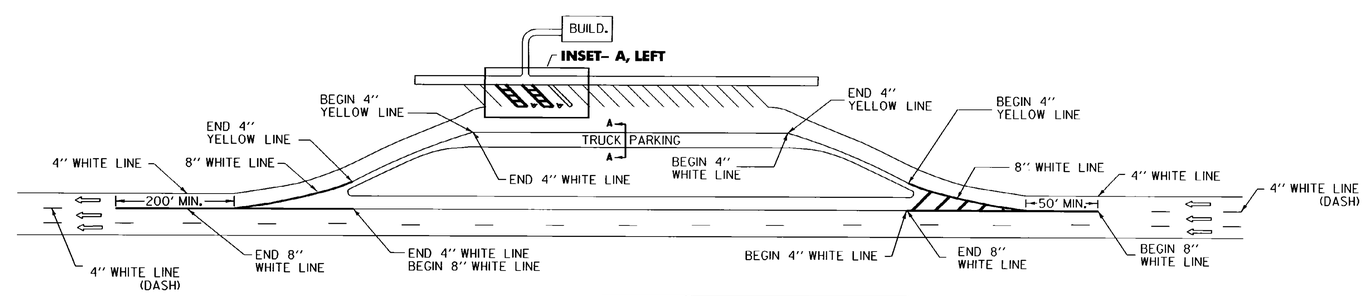

REST AREA PARKING DETAILS

THIS SHEET IS NOT TO SCALE

OTHER STDS. E - 191, E - 192 REQUIRED

REVISIONS AND CORRECTIONS

AUG. 18, 1995 - DATE OF ORIGINAL ISSUE

APPROVED FOR THIS PROJECT AND/OR DESIGN IMPLEMENTATION. FHWA FINAL APPROVAL PENDING.

APPROVED

DIRECTOR OF ENGINEERING

TRAFFIC AND SAFETY ENGINEER

PAVEMENT MARKING DETAILS

/traf/std/stdel93.dgn/stdel93.i

VERMONT AGENCY OF TRANSPORTATION

STANDARD

E-193

"W" BEAM GUARDRAIL WITH STEEL POSTS

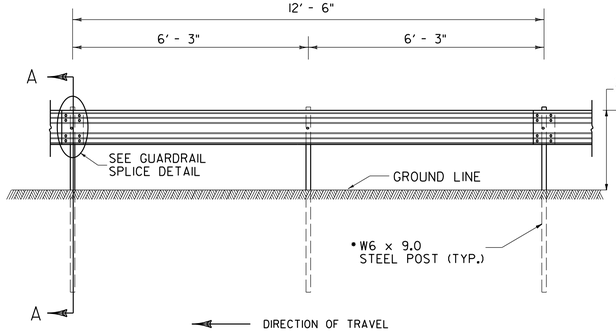

ELEVATION FROM ℄ OF ROAD

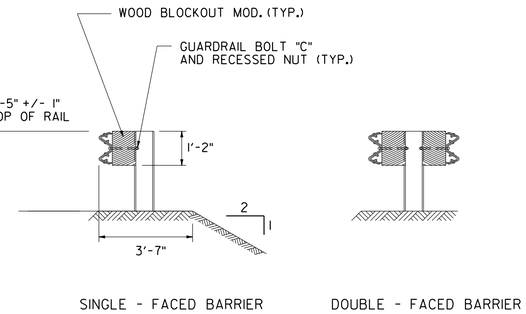

SECTION A -A

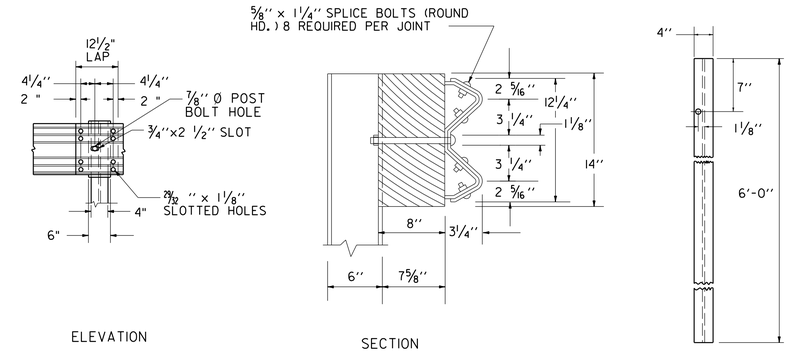

GUARDRAIL SPLICE DETAIL

FRONT FACE STEEL POST

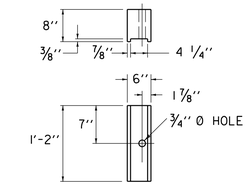

POST FACE
MODIFIED WOOD BLOCKOUT- ROUTED
6" X 8" X 1'-2" (FOR USE W/ STEEL POSTS ONLY)

NOTES:

1. BLOCKS SHALL BE MADE OF TIMBER WITH A STRESS GRADE OF 1200 PSI OR MORE. TESTING SHALL BE IN ACCORDANCE WITH WEST COAST LUMBER INSPECTION BUREAU, SOUTHERN PINE INSPECTION BUREAU OR OTHER APPROPRIATE ASSOCIATION. TIMBER FOR BLOCKS SHALL BE ROUGH SAWN (UNPLANED) WITH DIMENSIONS INDICATED. THE SIZE TOLERANCE OF ROUGH SAWN BLOCKS IN THE DIRECTION OF THE BOLT HOLES SHALL BE NOT MORE THAN +/- 1/4".
2. SUPPLY WOOD BLOCKS PER AASHTO M 168.
3. TREAT WITH PRESERVATIVE PER AASHTO M 133.
4. BLOCKOUTS MAY ALSO BE MADE OF APPROVED ALTERNATIVE MATERIAL.

"W" BEAM GUARDRAIL WITH WOOD POSTS

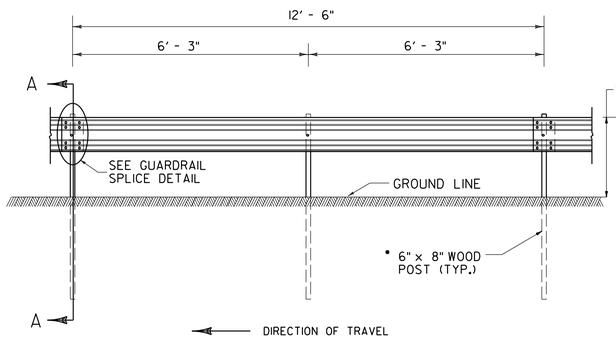

ELEVATION FROM ℄ OF ROAD

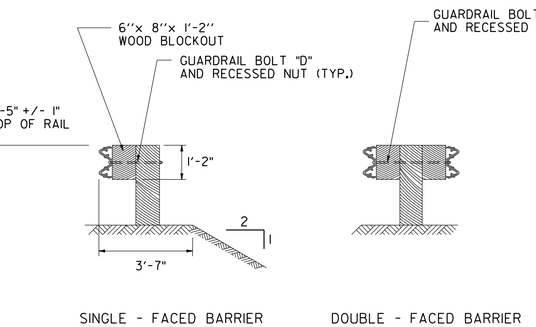

• NOTE : UNLESS OTHERWISE SPECIFIED ON PLANS

SECTION A -A

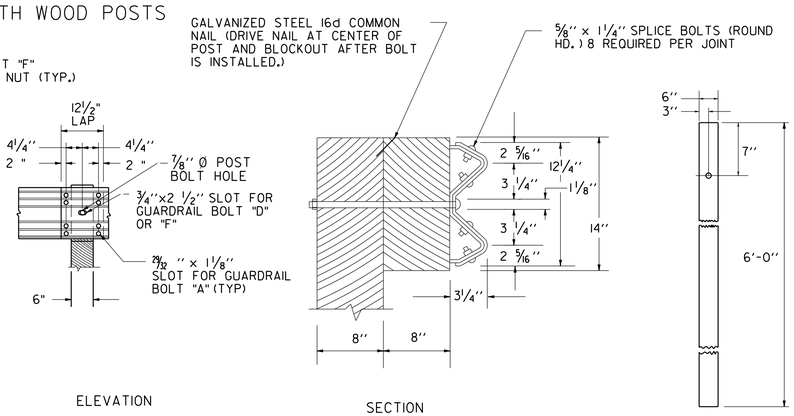

GUARDRAIL SPLICE DETAIL

FRONT FACE WOOD POST

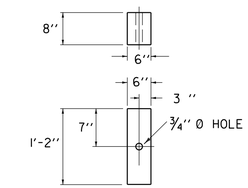

POST FACE
WOOD BLOCKOUT
6" X 8" X 1'-2"

NOTES:

1. BLOCKS SHALL BE MADE OF TIMBER WITH A STRESS GRADE OF 1200 PSI OR MORE. TESTING SHALL BE IN ACCORDANCE WITH WEST COAST LUMBER INSPECTION BUREAU, SOUTHERN PINE INSPECTION BUREAU OR OTHER APPROPRIATE ASSOCIATION. TIMBER FOR BLOCKS SHALL BE ROUGH SAWN (UNPLANED) WITH DIMENSIONS INDICATED. THE SIZE TOLERANCE OF ROUGH SAWN BLOCKS IN THE DIRECTION OF THE BOLT HOLES SHALL BE NOT MORE THAN +/- 1/4".
2. SUPPLY WOOD BLOCKS PER AASHTO M 168.
3. TREAT WITH PRESERVATIVE PER AASHTO M 133.
4. BLOCKOUTS MAY ALSO BE MADE OF APPROVED ALTERNATIVE MATERIAL.

GUARDRAIL DELINEATOR

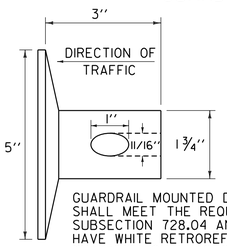

GUARDRAIL MOUNTED DELINEATORS SHALL MEET THE REQUIREMENTS OF SUBSECTION 728.04 AND SHALL HAVE WHITE RETROREFLECTIVE SHEETING EQUAL TO OR EXCEEDING SUBSECTION 750.08(B)(3) OR YELLOW RETROREFLECTIVE SHEETING EQUAL TO OR EXCEEDING SUBSECTION 750.08(B)(7).

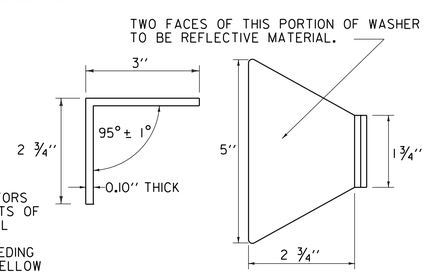

THIS REFLECTORIZED ALUMINUM WASHER IS TO BE PLACED IN VALLEY OF BEAM WHEN MOUNTING BEAM ONTO EACH FIFTH POST. WASHER SHALL MEET SPECIFICATION REQUIREMENTS FOR A.S.T.M. B-209 ALLOY 5052-H32.

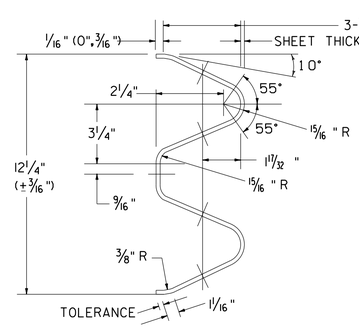

ARTBA RE-3[2@6'-3"=12'-6" CLASS A, TYPE 1]-73
TYPICAL GUARDRAIL SECTION

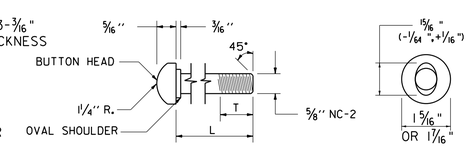

GUARDRAIL BOLT

GUARDRAIL BOLTS				FASTENER USED IN	
BOLT DES.	ARTBA REF. NO.	L	T (MIN.)	STEEL POSTS	WOOD POSTS
"A"	F-3[1 1/4]-76	1 1/4"	1"	X	X
"C"	F-3[9 1/2]-76	9 1/2"	1 3/4"	X	
"D"	F-3[18]-76	18"	2 1/2"		X
"F"	F-3[25]-76	25"	2"		X

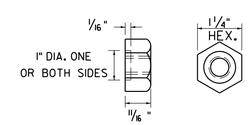

RECESSED NUT FOR GUARDRAIL BOLT

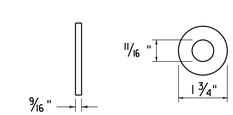

WASHER FOR 5/8" BOLTS
ARTBA F-13-73
NOTE: WASHER IS USED UNDER RECESSED NUT WHERE GUARDRAIL BOLT IS USED WITH WOOD POSTS.

GENERAL NOTES:

1. GUARDRAIL SHALL MEET THE REQUIREMENTS OF AASHTO M 180, CLASS A, TYPE 1, UNLESS OTHERWISE DESIGNATED.
2. GUARDRAIL SHALL BE SINGLE FACED UNLESS OTHERWISE DESIGNATED.
3. GUARDRAIL SECTIONS SHALL BE LAPPED IN THE DIRECTION OF TRAFFIC FLOW FOR THE LANE NEAREST THE GUARDRAIL.
4. FOR DESCRIPTION AND SPECIFICATION OF PARTS IDENTIFIED BY (ARTBA ...) AND OTHER DETAILS OF POSTS, POST ACCESSORIES, FASTENERS & RAIL ELEMENTS, SEE AASHTO-AGC-ARTBA JOINT TASK FORCE NO. 13, TITLED "A GUIDE TO STANDARDIZED HIGHWAY BARRIER HARDWARE", LATEST EDITION.
5. STANDARD STEEL BEAM TO BE 1/8" AND THE HEAVY DUTY TO BE 9/64" THICK.

REV.	DATE	DESCRIPTION
--	FEB. 10, 2014	UPDATED TO REFLECT GUARDRAIL HEIGHT
		OF 29"; FHWA LETTER (MAY 17, 2010)
--	NOV. 10, 2015	UPDATED DELINEATOR RETROREFLECTIVE
		SHEETING NOTES
--	MAR. 10, 2017	REVISED GUARDRAIL SPLICE DETAIL

OTHER STANDARDS REQUIRED: G-ID

VTRANS AND FHWA APPROVAL ON FILE WITH CONTRACT ADMINISTRATION

STEEL BEAM GUARDRAIL WITH STEEL POSTS
STEEL BEAM GUARDRAIL WITH WOOD POSTS

VTrans Working to Get You There
VERMONT AGENCY OF TRANSPORTATION

STANDARD
G-1

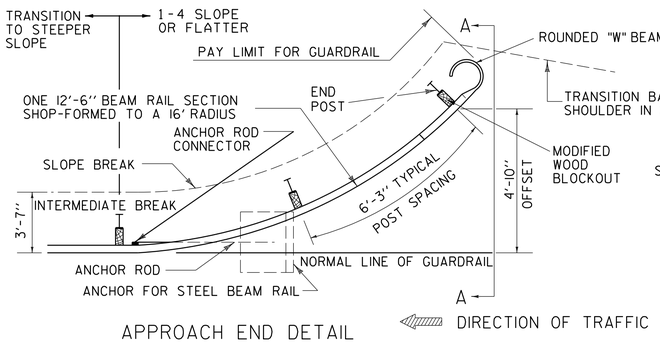

APPROACH END DETAIL

NHS APPROVED FOR USE WHERE DESIGN SPEED IS 40 OR LESS MPH
NON-NHS APPROVED FOR USE WHERE DESIGN SPEED IS 50 OR LESS MPH

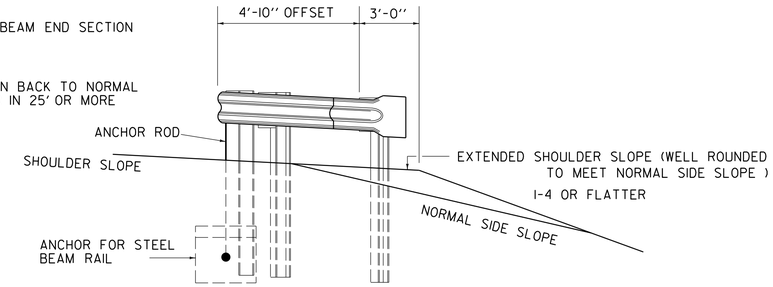

SECTION A-A

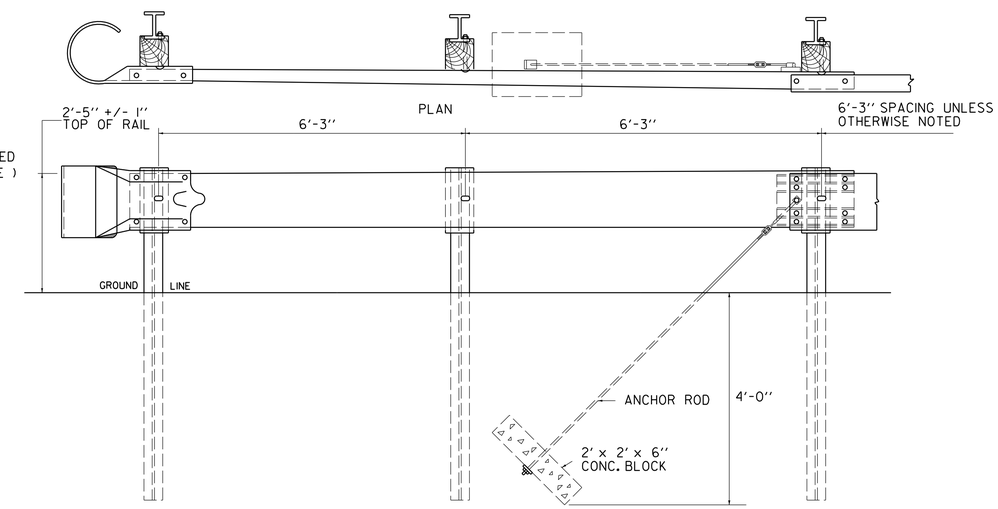

ASSEMBLY ELEVATION

TRAILING END TERMINAL FOR USE ON ONE-WAY HIGHWAYS

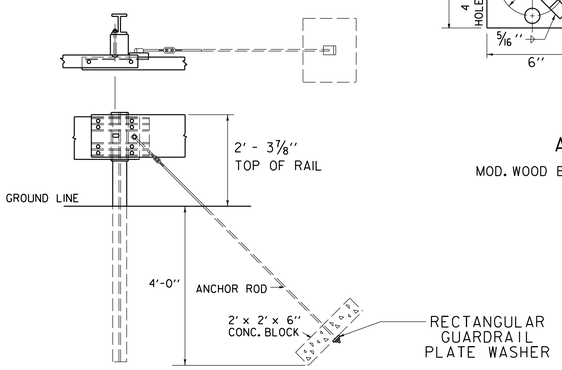

ANCHOR ROD

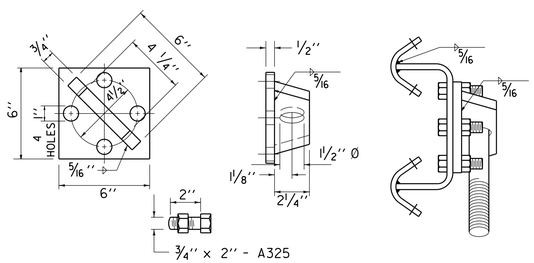

ANCHOR ROD CONNECTOR

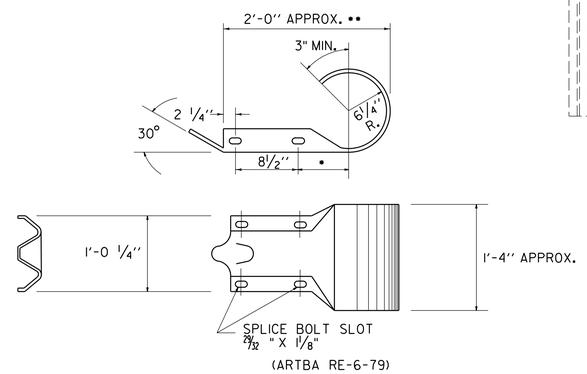

ROUNDED "W" BEAM END SECTION

• THIS DIMENSION IS 7 1/2" IN RE-7-79. IF THE DIMENSION IS USED IN THIS PART, IT WILL GIVE AN ACCEPTABLE OVERALL LENGTH (••) OF APPROXIMATELY 2'- 11/2."

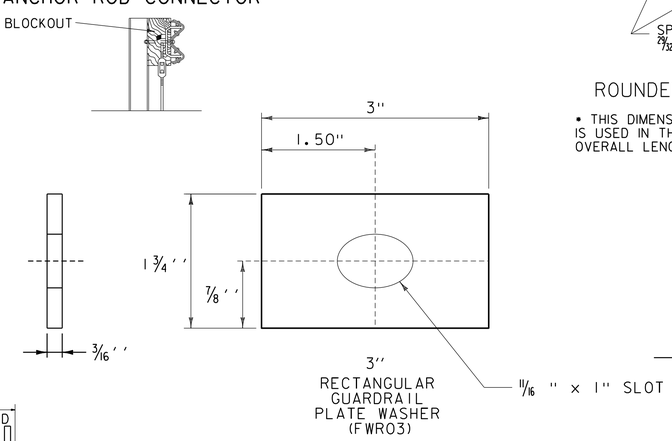

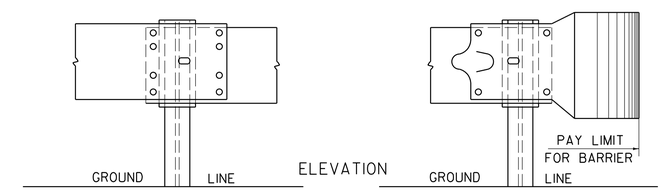

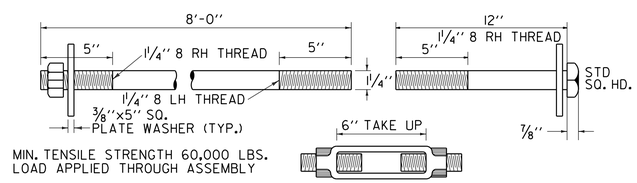

MIN. TENSILE STRENGTH 60,000 LBS.
LOAD APPLIED THROUGH ASSEMBLY

TURNBUCKLE

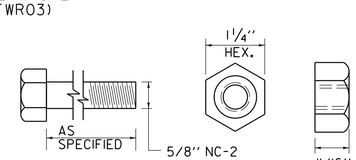

5/8" HEX NUT AND BOLT "F"
(ARTBA F-8-76)

FASTENER DETAILS

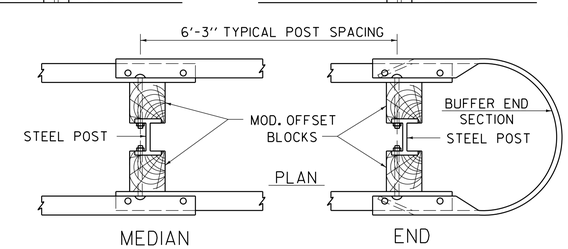

STEEL BEAM MEDIAN BARRIER

NOTE: TO BE USED OUTSIDE CLEAR ZONE ONLY.

GENERAL NOTES:

1. ALL METAL PARTS SHALL BE GALVANIZED
2. ALL WOOD POSTS SHALL BE GIVEN A PRESERVATIVE TREATMENT
3. DETAILS PERTINENT TO THE STANDARD INSTALLATION OF "W" BEAM SECTIONS WILL BE FOUND ON STANDARD DRAWING G-1.
4. FOR DESCRIPTION AND SPECIFICATIONS OF PARTS IDENTIFIED BY "(ARTBA...)" AND OTHER DETAILS OF POSTS, POST ACCESSORIES, FASTENERS AND RAIL ELEMENTS, SEE AASHTO-AGC-ARTBA JOINT TASK FORCE NO. 13, TITLED "A GUIDE TO STANDARDIZED HIGHWAY BARRIER HARDWARE", LATEST EDITION.
5. THE TRANSITION FROM THE APPROACH END TO THE STANDARD STEEL BEAM GUARDRAIL SHALL BE 25'-0" UNLESS OTHERWISE SPECIFIED.
6. WHEN STANDARD STEEL BEAM CONNECTS TO BRIDGE APPROACH RAIL OF A DIFFERENT HEIGHT THE LENGTH NEEDED TO TRANSITION THE HEIGHT OF STANDARD STEEL BEAM TO MATCH THE BRIDGE APPROACH RAIL SHALL BE 25'-0" UNLESS OTHERWISE SPECIFIED.
7. WHEN STANDARD STEEL BEAM CONNECTS TO A MANUFACTURED TERMNAL SECTION OF A DIFFERENT HEIGHT THE LENGTH NEEDED TO TRANSITION THE HEIGHT OF STANDARD STEEL BEAM TO MATCH THE MANUFACTURED TERMINAL SECTION SHALL BE 25'-0" UNLESS OTHERWISE SPECIFIED.

REV.	DATE	DESCRIPTION
2	JAN. 3, 2000	UPDATED TO REFLECT METRIC STD. CHANGES
3	FEB. 10, 2014	UPDATED TO REFLECT GUARDRAILS HEIGHT OF 29": AS NOTED IN FHWA LETTER DATED MAY 17,2000
4	MAR. 10, 2017	UPDATED WASHER DETAILS
OTHER STANDARDS REQUIRED: G-1		
VTRANS AND FHWA APPROVAL ON FILE WITH CONTRACT ADMINISTRATION		

STEEL BEAM GUARDRAIL END TERMINALS
ANCHOR FOR STEEL BEAM GUARDRAIL
STEEL BEAM MEDIAN BARRIER

VTrans Working to Get You There VERMONT AGENCY OF TRANSPORTATION

STANDARD
G-1D

1. TRAFFIC CONTROL DEVICES NOT DETAILED IN THE VERMONT AGENCY OF TRANSPORTATION (VAOT) "STANDARD DRAWINGS" OR THE PROJECT PLANS SHALL BE IN ACCORDANCE WITH THE CURRENT "MANUAL ON TRAFFIC CONTROL DEVICES" (MUTCD) AND THE "STANDARD HIGHWAY SIGNS AND MARKINGS" BOOK, AND THEIR LATEST REVISIONS, (SHSM) PUBLISHED BY THE FEDERAL HIGHWAY ADMINISTRATION (FHWA).

2. CONSTRUCTION SIGNS SHALL BE ERECTED BEFORE THE START OF ANY WORK AND SHALL BE COVERED UNTIL WORK COMMENCES, DURING PERIODS OF INACTIVITY OR UPON COMPLETION OF THE WORK. EACH SIGN SHALL BE ERECTED IN A NEAT AND WORKMANLIKE MANNER.

3. DIAMOND SHAPED CONSTRUCTION SIGNS SHALL BE 48 INCH BY 48 INCH.

4. CONSTRUCTION SIGN COVERS SHALL CONSIST OF A PANEL, PAINTED FLAT BLACK, THE SAME SIZE AS THE SIGN IT COVERS. THE PANEL SHALL BE OF WOOD, PLYWOOD, HARDBOARD OR ANY MATERIAL SATISFACTORY TO THE ENGINEER. NO MATERIAL WILL BE APPROVED THAT WILL DETERIORATE BY EXPOSURE TO THE WEATHER DURING THE PROJECT. MOUNTING OF THE PANEL SHALL BE DONE IN SUCH A WAY AS NOT TO DAMAGE THE SIGN FACE MATERIAL.

5. SIGNS SHALL BE MAINTAINED IN A CLEAN AND LEGIBLE CONDITION SATISFACTORY TO THE ENGINEER. THEY SHALL BE KEPT PLUMB AND LEVEL, AND ALWAYS PRESENT A NEAT APPEARANCE. DAMAGED, DEFACED OR DIRTY SIGNS SHALL BE REPAIRED, CLEANED OR REPLACED AS ORDERED BY THE ENGINEER.

6. NO CROSS-BRACING OR BACK-BRACING TO KEEP POSTS PLUMB WILL BE ALLOWED. CONCRETE FOUNDATIONS, COLLARS OR SOIL BEARING PLATES ARE NOT PERMITTED.

7. CONSTRUCTION SIGNS INSTALLED ON POSTS SHALL BE SET SECURELY IN THE GROUND ON TWO POSTS. THE BOTTOM OF A SIGN SHALL BE AT LEAST FIVE FEET ABOVE THE EDGE OF PAVEMENT AND THE NEAREST EDGE OF A SIGN SHALL BE AT LEAST SIX FEET OUTSIDE THE SHOULDER POINT, FOUR FEET OUTSIDE GUARDRAIL, OR TWO FEET OUTSIDE CURBING OR SIDEWALK. THE INSTALLATION OF SIGNS SHALL BE SUBJECT TO APPROVAL OF THE ENGINEER. IN URBAN AREAS, THE BOTTOM OF THE SIGN SHALL BE AT LEAST SEVEN FEET ABOVE THE SIDEWALK OR EDGE OF PAVEMENT, WHICHEVER IS HIGHER.

8. PORTABLE SIGNS SHALL BE PLACED ON THE EDGE OF ROADWAY AND A MINIMUM OF ONE FOOT ABOVE THE TRAVELED WAY. ALL VEGETATION THAT INTERFERES WITH VISIBILITY OF THE SIGNS SHALL BE REMOVED. WHEN PLACED BEHIND GUARDRAIL, THE BOTTOM OF THE SIGN FACE SHALL BE ABOVE THE TOP OF THE GUARDRAIL.

9. SIGNS SHALL BE REMOVED UPON COMPLETION OF THE WORK AT THE DISCRETION OF THE ENGINEER.

10. ROLL UP CONSTRUCTION SIGNS SHALL HAVE RETROREFLECTIVE SHEETING EQUAL TO OR EXCEEDING THE "AMERICAN ASSOCIATION OF STATE HIGHWAY AND TRANSPORTATION OFFICIALS" (AASHTO) M 268 ["AMERICAN SOCIETY FOR TESTING AND MATERIALS" (ASTM) D 4956] TYPE VI AND TYPE VII UNLESS OTHERWISE NOTED.

11. SOLID SUBSTRATE CONSTRUCTION SIGNS SHALL HAVE RETROREFLECTIVE SHEETING EQUAL TO OR EXCEEDING THE "AMERICAN ASSOCIATION OF STATE HIGHWAY AND TRANSPORTATION OFFICIALS" (AASHTO) M 268 ["AMERICAN SOCIETY FOR TESTING AND MATERIALS" (ASTM) D 4956] TYPE VIII OR IX REQUIREMENTS UNLESS OTHERWISE NOTED.

12. WHERE CONSTRUCTION SIGN INSTALLATIONS ARE NOT PROTECTED BY GUARDRAIL OR OTHER APPROVED TRAFFIC BARRIERS, ALL SIGN STANDS AND POST INSTALLATIONS SHALL MEET "NATIONAL COOPERATIVE HIGHWAY RESEARCH PROGRAM" (NCHRP) REPORT 350 OR THE AASHTO "MANUAL FOR ASSESSING SAFETY HARDWARE" (MASH). THE APPROPRIATE RESOURCE SHALL BE DETERMINED AS DESCRIBED IN THE MASH PUBLICATION. NO SIGN POSTS SHALL EXTEND OVER THE TOP OF THE SIGN INSTALLED ON SAID POSTS. WHEN ANCHORS ARE INSTALLED, STUBS SHALL NOT BE GREATER THAN FOUR INCHES ABOVE EXISTING GROUND.

13. ROADWAY AND SHOULDER WIDTHS DEPICTED ON THE STANDARD DRAWINGS MAY VARY.

14. THESE STANDARD DRAWINGS ARE INTENDED TO SERVE AS VTRANS STANDARD OPERATING PROCEDURE. IT IS NOTED THAT COMPONENT PARTS OF A TEMPORARY TRAFFIC CONTROL WORK ZONE MAY BE MODIFIED DUE TO FIELD CONDITIONS AT THE DISCRETION OF THE ENGINEER.

REV.	DATE	DESCRIPTION
0	AUG. 6, 2012	ORIGINAL APPROVAL
1	APR. 25, 2016	INSERTED NOTE 3, UPDATED STANDARD NAME

OTHER STANDARDS REQUIRED: NONE

VTRANS AND FHWA APPROVAL ON FILE WITH CONTRACT ADMINISTRATION

TEMPORARY TRAFFIC CONTROL GENERAL NOTES

VTrans Working to Get You There VERMONT AGENCY OF TRANSPORTATION

STANDARD

T-1

VERMONT WARNING SIGN NOTES:

1. UNLESS OTHERWISE SPECIFIED, VERMONT WARNING SIGNS SHALL BE BLACK LEGEND AND BORDER ON YELLOW RETROREFLECTIVE SHEETING EQUAL TO OR EXCEEDING THE "AMERICAN ASSOCIATION OF STATE HIGHWAY AND TRANSPORTATION OFFICIALS" (AASHTO) M 268 ["AMERICAN SOCIETY FOR TESTING AND MATERIALS" (ASTM) D 4956] TYPE IV.

VERMONT REGULATORY SIGN NOTES:

1. UNLESS OTHERWISE SPECIFIED, VERMONT REGULATORY SIGNS SHALL BE BLACK LEGEND AND BORDER ON WHITE RETROREFLECTIVE SHEETING EQUAL TO OR EXCEEDING THE "AMERICAN ASSOCIATION OF STATE HIGHWAY AND TRANSPORTATION OFFICIALS" (AASHTO) M 268 ["AMERICAN SOCIETY FOR TESTING AND MATERIALS" (ASTM) D 4956] TYPE IV.
2. WHEN SPECIFIED, RED RETROREFLECTIVE SHEETING SHALL BE EQUAL TO OR EXCEEDING THE AASHTO M 268 [ASTM D 4956] TYPE III.

GENERAL NOTES:

1. SIGN BASE MATERIAL FOR TRAFFIC SIGN, TYPE A SHALL BE FLAT SHEET ALUMINUM MEETING THE FLAT SHEET ALUMINUM THICKNESS CHART ON THIS SHEET.
2. SIGN BASE MATERIAL FOR TRAFFIC SIGN, TYPE B SHALL BE EXTRUDED ALUMINUM PANELS.
3. ALL SIGN TEXT SHALL BE IN ACCORDANCE WITH THE RESPECTIVE ALPHABET AS IDENTIFIED IN THE CURRENT "STANDARD HIGHWAY SIGNS AND MARKINGS" (SHSM) BOOK, AND ITS LATEST REVISIONS.
4. COLORS SHALL MEET THE REQUIREMENTS AS IDENTIFIED IN THE CURRENT MUTCD, AND ITS LATEST REVISIONS.
5. ALL DIMENSIONS SHOWN IN INCHES.

FLAT SHEET ALUMINUM THICKNESS CHART

THICKNESS	0.080	0.100	0.125
SIGN SIZE	12 X 12	36 X 12	48 X 18
	18 X 12	36 X 15	48 X 24
	18 X 18	36 X 18	48 X 30
	21 X 15	36 X 24	48 X 42
	24 X 8	36 X 36	48 X 48
	24 X 10	36 X 42	48 X 60
	24 X 12	36 X 45	72 X 10
	24 X 18	36 X 48	72 X 12
	24 X 24	36 X 54	72 X 20
	24 X 30		
	30 X 15		
	30 X 18		
	30 X 24		
	30 X 30		
	30 X 42		

REV.	DATE	DESCRIPTION
0	FEB. 12, 2016	ORIGINAL APPROVAL
1	APR. 25, 2016	ADDED VERMONT REGULATORY SIGN NOTE 2

OTHER STANDARDS REQUIRED: NONE

VTRANS AND FHWA APPROVAL ON FILE WITH CONTRACT ADMINISTRATION

TRAFFIC SIGN GENERAL NOTES

VTrans Working to Get You There VERMONT AGENCY OF TRANSPORTATION

STANDARD

T - 2

LEGEND

(A) ROAD WORK AHEAD — W20-1

(B) ROAD WORK 500 FT — W20-1

(C) SIDE ROAD WORK AHEAD — VC-869

(D) SIDE ROAD WORK 500 FT — VC-869

(E) SIDE ROAD WORK LEFT — VC-869

(F) SIDE ROAD WORK RIGHT — VC-869

(G) ROAD WORK NEXT XX MILES — G20-1

(H) END ROAD WORK — G20-2

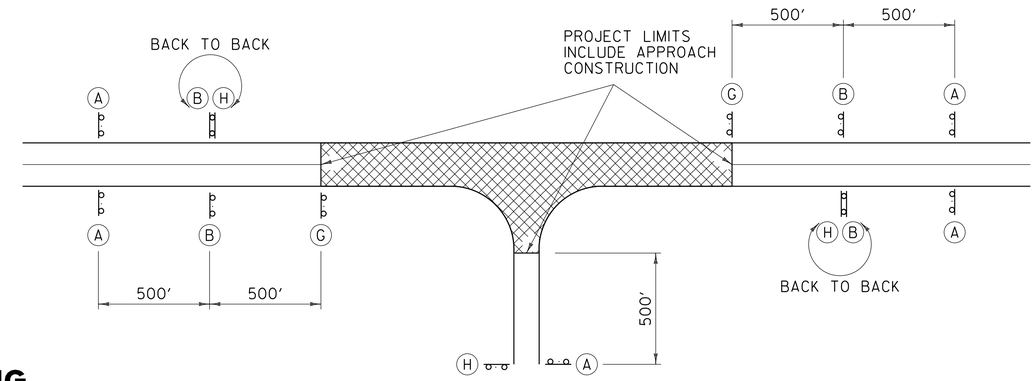

TYPICAL APPROACH SIGNING

FIELD CONDITIONS MAY DICTATE THE ACTUAL PLACEMENT.

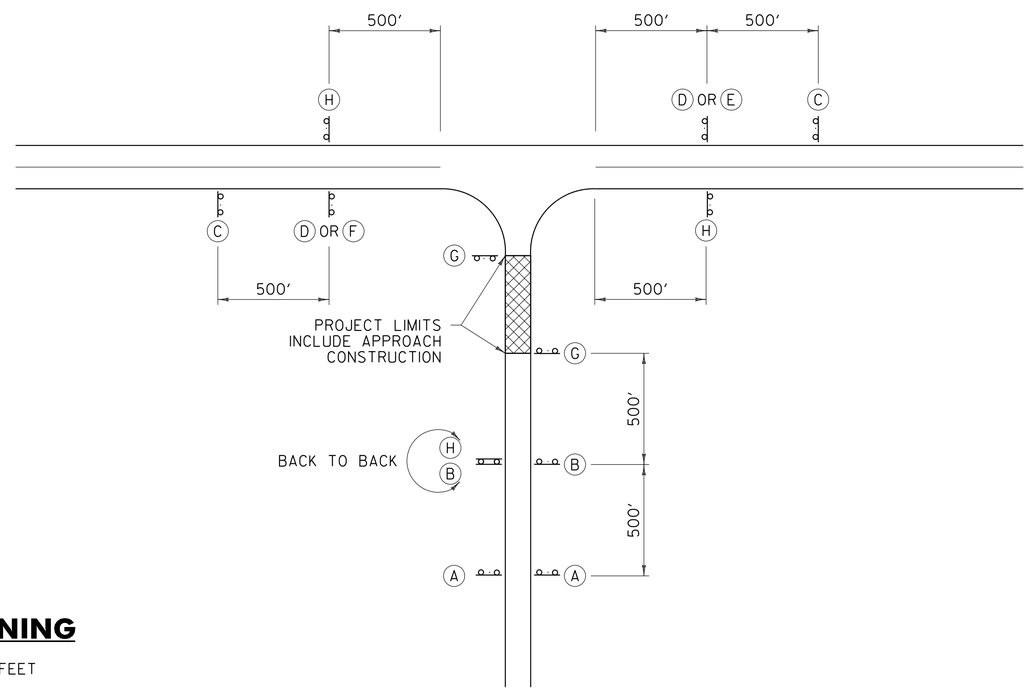

SIDE ROAD APPROACH SIGNING

TO BE USED WHEN CONSTRUCTION IS UP TO 1000 FEET FROM THE INTERSECTION. FIELD CONDITIONS MAY DICTATE THE ACTUAL PLACEMENT.

GENERAL NOTES:

1. SIGNS SHOWN ON THIS SHEET ARE INTENDED FOR USE IN PROVIDING ADVANCE WARNING AND INFORMATION ON CONSTRUCTION PROJECTS OVER WHICH TRAFFIC WILL BE MAINTAINED. WHEN ADDITIONAL APPROACH SIGNS OR OTHER TYPES OF ADVANCE SIGNING OR CONTROL ARE NECESSARY, THE PLANS AND/OR THE SPECIFICATIONS FOR THAT PROJECT WILL GIVE THE DETAILS OF THE SIGNS AND DEVICES REQUIRED. FOR ON-PROJECT CONSTRUCTION SIGNS, REFER TO APPROPRIATE STANDARD SHEETS.
2. THE "ROAD WORK NEXT XX MILES" SIGN (G20-1) SHALL BE INSTALLED IN ADVANCE OF TEMPORARY TRAFFIC CONTROL ZONES THAT ARE MORE THAN TWO MILES IN LENGTH OR AS DIRECTED BY THE ENGINEER. DISTANCES SHALL BE STATED TO THE NEAREST WHOLE MILE.
3. SIGNS SHALL BE LOCATED AS DETAILED ON THIS SHEET OR AS OTHERWISE SHOWN ON THE PLANS. THEY SHALL APPEAR AT EACH END OF THE HIGHWAY UNDER CONSTRUCTION AND ON ALL INTERSECTING PUBLIC HIGHWAYS. THE ENGINEER SHALL DETERMINE THE EXACT LOCATIONS.

OTHER STDS. REQUIRED: **T–1, T–28**

REVISIONS AND CORRECTIONS

AUG. 6, 2012 - ORIGINAL APPROVAL DATE

APPROVED

HIGHWAY SAFETY & DESIGN ENGINEER

DIRECTOR OF PROGRAM DEVELOPMENT

Mark D. Richter

FEDERAL HIGHWAY ADMINISTRATION

CONVENTIONAL ROADS CONSTRUCTION APPROACH SIGNING

VERMONT AGENCY OF TRANSPORTATION

STANDARD

T-10

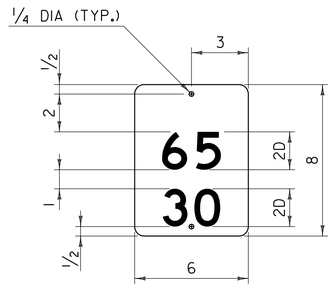

INTERSTATE MILEPOST PLAQUE

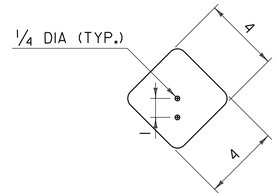

TYPE I DELINEATOR

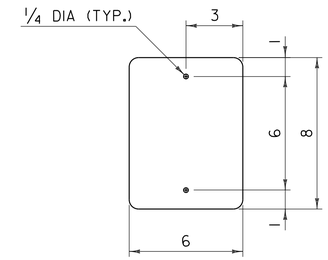

TYPE II DELINEATOR

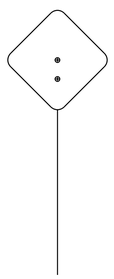

TYPE I

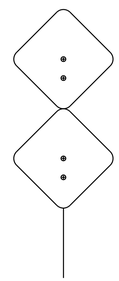

TYPE I – U-TURNS

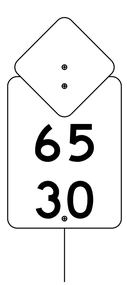

WHITE TYPE I
WITH MILEPOST PLAQUE

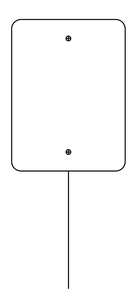

TYPE II

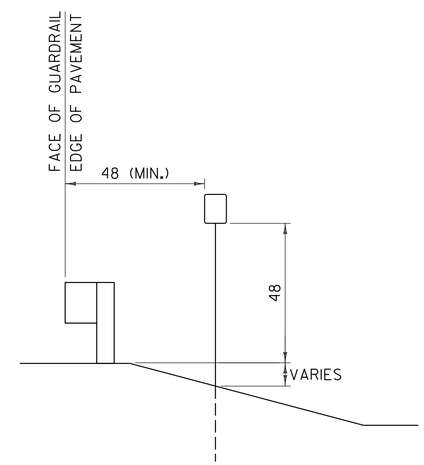

INSTALLATION DETAIL*

• INSTALLATION DETAIL APPLICABLE TO ALL DELINEATOR ASSEMBLIES

GENERAL NOTES:

1. THE FIRST LINE OF TEXT ON INTERSTATE MILEPOST PLAQUES INDICATES THE WHOLE NUMBER MILEAGE FROM THE BEGINNING OF A ROUTE. MILEAGE IS ALWAYS MEASURED TRAVELING FROM THE SOUTH TO NORTH OR FROM THE WEST TO EAST. THE ROUTE DIRECTION IS ESTABLISHED USING THE VERMONT AGENCY OF TRANSPORTATION (VAOT) ROUTE LOGS.
2. THE SECOND LINE OF TEXT ON INTERSTATE MILEPOST PLAQUES INDICATES THE ADDITIONAL MILEAGE, IN HUNDREDTHS, FROM THE BEGINNING OF A ROUTE. MILEAGE IS ALWAYS MEASURED TRAVELING FROM THE SOUTH TO NORTH OR FROM THE WEST TO EAST. THE ROUTE DIRECTION IS ESTABLISHED USING THE VAOT ROUTE LOGS.
3. THE INTERSTATE MILEPOST PLAQUE SHALL BE GREEN RETROREFLECTIVE LEGEND ON A WHITE RETROREFLECTIVE BACKGROUND AND SHALL HAVE RETROREFLECTIVE SHEETING EQUAL TO OR EXCEEDING "AMERICAN ASSOCIATION OF STATE HIGHWAY AND TRANSPORTATION OFFICIALS" (AASHTO) M 268 ["AMERICAN SOCIETY FOR TESTING AND MATERIALS" (ASTM) D 4956] TYPE III.
4. ALL LINES OF TEXT SHALL BE CENTERED HORIZONTALLY AND SHALL BE AS IDENTIFIED IN THE PLANS.
5. THE INTERSTATE MILEPOST PLAQUE AND DELINEATOR BASE MATERIAL SHALL BE 0.063 INCH FLAT SHEET ALUMINUM.
6. CORNERS SHALL BE ROUNDED TO A 1/2 INCH RADIUS.
7. A TYPE III DELINEATOR CONSISTS OF A TYPE I DELINEATOR FACING THE NORMAL DIRECTION OF TRAVEL AND A SINGLE RED TYPE I DELINEATOR FACING THE OPPOSITE DIRECTION. THE WHITE DELINEATOR AND RED DELINEATOR COMBINATION IS PLACED ON THE DRIVER'S RIGHT AND THE AMBER DELINEATOR AND RED DELINEATOR COMBINATION ON THE DRIVER'S LEFT.
8. DELINEATORS SHALL HAVE WHITE, GREEN, OR BLUE RETROREFLECTIVE SHEETING EQUAL TO OR EXCEEDING AASHTO M 268 ASTM D 4956 TYPE III, OR RED OR YELLOW RETROREFLECTIVE SHEETING EQUAL TO OR EXCEEDING AASHTO M 268 ASTM D 4956 TYPE VII, VIII, OR IX.
9. A SINGLE 14 GAGE, 1.75 INCH SQUARE STEEL POST AND 12 GAGE, TWO INCH SQUARE ANCHOR SHALL BE USED FOR INSTALLATION. THE ANCHOR SHALL BE A MINIMUM OF 30 INCHES IN LENGTH.
10. THE TOP OF POST SHALL BE ONE INCH ABOVE THE UPPER HOLE FOR ALL TYPE I DELINEATORS.
11. THE TOP OF POST SHALL BE FLUSH WITH THE TOP OF ALL TYPE II DELINEATORS.
12. ALL DIMENSIONS SHOWN IN INCHES.

OTHER STDS. REQUIRED: **T–45**

REVISIONS AND CORRECTIONS

JAN. 2, 2013 - ORIGINAL APPROVAL DATE

APPROVED

HIGHWAY SAFETY & DESIGN ENGINEER

DIRECTOR OF PROGRAM DEVELOPMENT

Mark D. Richter

FEDERAL HIGHWAY ADMINISTRATION

DELINEATORS AND MILEPOSTS

VERMONT AGENCY OF TRANSPORTATION

STANDARD

T-40

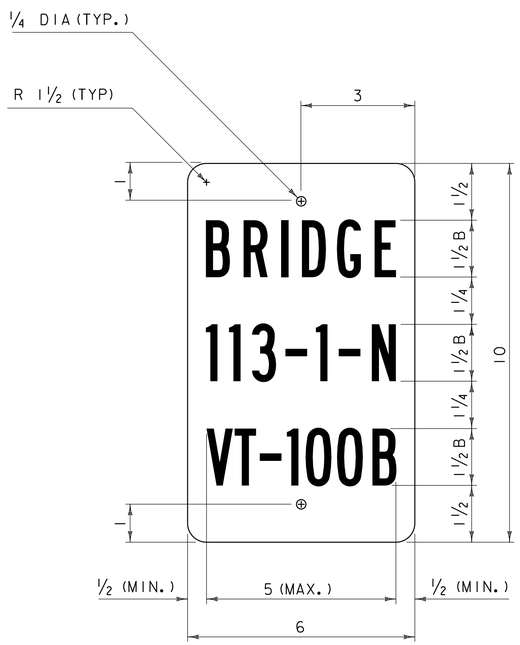

VD-701

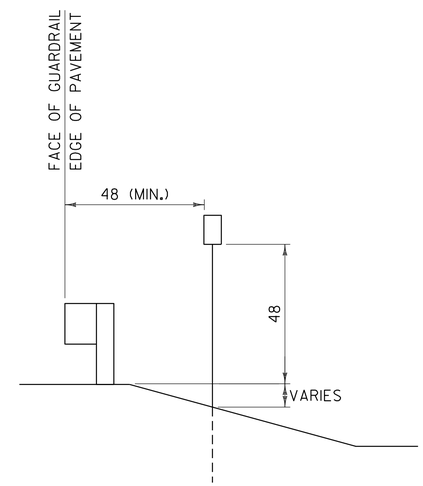

VD-701 INSTALLATION DETAIL

GENERAL NOTES:

1. BRIDGE NUMBER PLAQUES ARE TO BE INSTALLED ALONG THE FEDERAL AID HIGHWAY SYSTEM INCLUDING ALL STATE HIGHWAYS AND TOWN HIGHWAYS ON THE FEDERAL AID HIGHWAY SYSTEM.
2. BRIDGE NUMBER PLAQUES SHALL BE LOCATED ON BOTH BRIDGE APPROACHES AT THE NEAREST VISIBLE LOCATION.
3. THE SIGN BASE MATERIAL SHALL BE 0.063 INCH FLAT SHEET ALUMINUM.
4. THE SIGN SHALL BE WHITE RETROREFLECTIVE LEGEND ON A GREEN RETROREFLECTIVE BACKGROUND, BOTH SHALL HAVE RETROREFLECTIVE SHEETING EQUAL TO OR EXCEEDING "AMERICAN ASSOCIATION OF STATE HIGHWAY AND TRANSPORTATION OFFICIALS" (AASHTO) M 268 ["AMERICAN SOCIETY FOR TESTING AND MATERIALS" (ASTM) D 4956] TYPE III.
5. THE SECOND LINE OF TEXT INDICATES THE BRIDGE NUMBER. THE BRIDGE NUMBER CAN BE OBTAINED USING THE VERMONT AGENCY OF TRANSPORTATION (VAOT) ROUTE LOGS OR BY CONSULTING WITH THE VAOT STRUCTURES SECTION.
6. THE THIRD LINE OF TEXT INDICATES THE STATE ROUTE NUMBER. IN ALL CASES THIS WILL BE DEPICTED USING THE LETTER ABBREVIATION, FOLLOWED BY A HYPHEN, FOLLOWED BY THE ROUTE NUMBER. FOR EXAMPLE US ROUTE 2 WOULD BE IDENTIFIED USING US-2.
7. THE SECOND AND THIRD LINES OF TEXT SHALL BE CENTERED HORIZONTALLY AND SHALL BE AS DEFINED IN THE PLANS.
8. A SINGLE 14 GAGE, 1.75 INCH SQUARE STEEL POST AND 12 GAGE, TWO INCH SQUARE ANCHOR SHALL BE USED FOR INSTALLATION. THE ANCHOR SHALL BE A MINIMUM OF 30 INCHES IN LENGTH.
9. ALL DIMENSIONS SHOWN IN INCHES.

OTHER STDS. REQUIRED: **T-45**

REVISIONS AND CORRECTIONS

APRIL 9, 2014 - ORIGINAL APPROVAL DATE

APPROVED

HIGHWAY SAFETY & DESIGN ENGINEER

DIRECTOR OF PROGRAM DEVELOPMENT

Mark D. Richter

FEDERAL HIGHWAY ADMINISTRATION

BRIDGE NUMBER PLAQUE

VERMONT AGENCY OF TRANSPORTATION

STANDARD

T-42

POST AND ANCHOR SELECTION CHART

POST SIZE (IN.)	POST THICKNESS (IN.)	POST WEIGHT (LBS/FT.)	POST GAGE	SECTION MODULUS ($IN.^3$)	ONE POST SV	TWO POST SV	THREE POST SV	POSTS PERMITTED IN 8' PATH	ANCHOR SIZE (IN.)	ANCHOR GAGE	MINIMUM ANCHOR LENGTH
1.75	.083	1.88	14	0.222	45	90	135	TWO	2.00	12	30
2.00	.109	2.42	12	0.393	80	160	240	TWO	2.25	12	48
2.50	.109	3.35	12	0.673	137	274	411	ONE	3.00	7	48

NOTES:

1. ALL SIGN POSTS SHALL HAVE 7/16 INCH HOLES EVERY ONE INCH ON CENTER (ALL FOUR SIDES).
2. THE NUMBER OF SIGN POSTS PERMITTED WITHIN AN EIGHT FOOT PATH ASSUMES THAT THE SIGN ASSEMBLY IS NOT PROTECTED BY GUARDRAIL OR IS LOCATED WITHIN A GUARDRAIL'S DEFLECTION DISTANCE DETERMINED PER THE CURRENT "AMERICAN ASSOCIATION OF STATE HIGHWAY AND TRANSPORTATION OFFICIALS" (AASHTO) ROADSIDE DESIGN GUIDE. ADDITIONAL POSTS MAY BE INSTALLED USING SLIP BASES THAT MEET "NATIONAL COOPERATIVE HIGHWAY RESEARCH PROGRAM" (NCHRP) REPORT 350 OR THE AASHTO "MANUAL FOR ASSESSING SAFETY HARDWARE" (MASH). THE APPROPRIATE RESOURCE SHALL BE DETERMINED AS DESCRIBED IN THE MASH PUBLICATION.
3. TO USE THE SELECTION VALUE (SV) COLUMNS IN THE TABLE ABOVE, MULTIPLY A SIGN'S SURFACE AREA IN SQUARE FEET (H x L) BY THE SIGN'S HEIGHT IN FEET MEASURED FROM THE GROUND TO THE CENTROID OF THE SIGN ASSEMBLY (h). THIS RESULT MUST BE LESS THAN OR EQUAL TO THE CORRESPONDING SELECTION VALUE. NOTE THAT FOR SIGNS WITH MULTIPLE POSTS, THE LARGEST HEIGHT DIMENSION SHALL BE USED TO CALCULATE THE POST SELECTION VALUE.
4. THE DESIGN CRITERIA UTILIZED IN SIGN POST AND ANCHOR SELECTION IS AS FOLLOWS: WIND SPEED OF 70 MPH (10 YEAR MEAN RECURRENCE INTERVAL), WIND PRESSURE OF 19 PSF, STEEL MINIMUM YIELD OF 55,000 PSI, AND AN ALLOWABLE STRESS OF 1.4 (0.60 FY).

CORNER BOLT INSTALLATION DETAIL

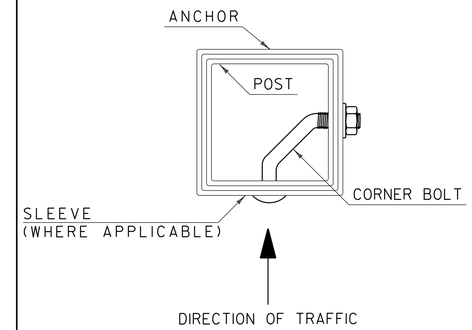

NOTES:

1. CORNER BOLTS SHALL BE 5/16 INCH DIAMETER WITH 18 THREADS PER INCH AND DIMENSIONS SHALL BE DETERMINED BASED ON THE OUTERMOST DIMENSION OF THE SLEEVE, ANCHOR OR POST. THREAD EXPOSURE MUST EXCEED THE CORRESPONDING NUT WIDTH. THE CORNER BOLT AND CORRESPONDING HARDWARE SHALL BE ZINC PLATED, MEETING OR EXCEEDING THE REQUIREMENTS OF THE "AMERICAN SOCIETY FOR TESTING AND MATERIALS" (ASTM) A307.

SLEEVE /ANCHOR INSTALLATION DETAIL

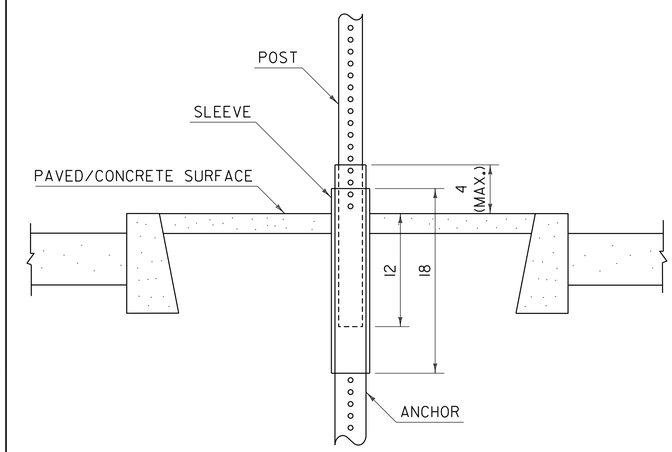

NOTES:

1. A SLEEVE SHALL BE INSTALLED FOR SIGN INSTALLATIONS IN CONCRETE OR PAVEMENT.
2. THE SLEEVE SHALL BE 18 INCHES MINIMUM IN LENGTH.
3. THREE INCH SLEEVES THAT DO NOT HAVE HOLES WILL REQUIRE THAT 7/16 INCH HOLES ARE DRILLED TO FACILITATE CONNECTIONS.
4. REFER TO CURRENT EDITION OF THE "VERMONT AGENCY OF TRANSPORTATION STANDARD SPECIFICATIONS FOR CONSTRUCTION" FOR MATERIAL REQUIREMENTS.

POST SPACING DETAILS

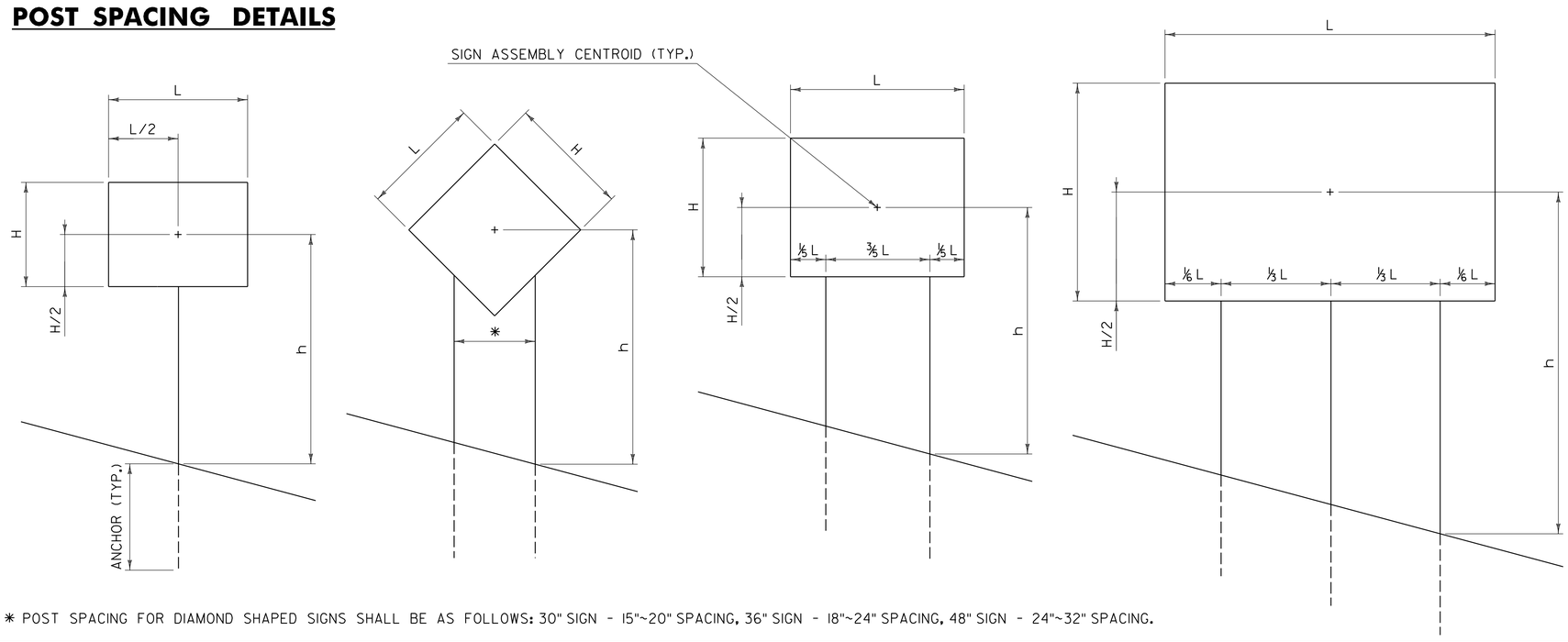

* POST SPACING FOR DIAMOND SHAPED SIGNS SHALL BE AS FOLLOWS: 30" SIGN - 15"~20" SPACING, 36" SIGN - 18"~24" SPACING, 48" SIGN - 24"~32" SPACING.

GENERAL NOTES:

1. ALL SQUARE TUBE STEEL POSTS AND ANCHORS SHALL BE FORMED INTO A SIZE AND SHAPE IN SUCH A MANNER THAT NEITHER FLASH NOR WELD SHALL INTERFERE WITH THE TELESCOPING PROPERTIES, NOR DAMAGE THE GALVANIZING.
2. ANCHORS MAY BE DRIVEN OR SET INTO A DUG HOLE AND BACKFILLED. IF DRIVEN, A DRIVING CAP SHALL BE USED. THE DUG HOLE INSTALLATION METHOD SHALL BE UTILIZED IN AREAS WITH POOR SOIL CONDITIONS OR AS DIRECTED BY THE ENGINEER. BACKFILL SHALL BE COMPACTED AS DIRECTED BY THE ENGINEER.
3. THE TOPS OF SIGN POSTS SHALL BE AT OR NEAR THE TOP OF SIGN. THE POST SHALL NOT EXTEND ABOVE THE TOP OF SIGN.
4. SIGN POSTS SHALL BE INSTALLED A MINIMUM OF ONE FOOT BELOW GROUND, INSIDE THE ANCHOR. THE LENGTH OF ANCHOR EXPOSED ABOVE GROUND SHALL NOT EXCEED FOUR INCHES.
5. ALL DIMENSIONS SHOWN IN INCHES.

OTHER STDS. REQUIRED: **NONE**

REVISIONS AND CORRECTIONS

JAN. 2, 2013 - ORIGINAL APPROVAL DATE

APPROVED

HIGHWAY SAFETY & DESIGN ENGINEER

DIRECTOR OF PROGRAM DEVELOPMENT

Mark D. Richter

FEDERAL HIGHWAY ADMINISTRATION

SQUARE TUBE SIGN POST AND ANCHOR

VERMONT AGENCY OF TRANSPORTATION

STANDARD

T-45

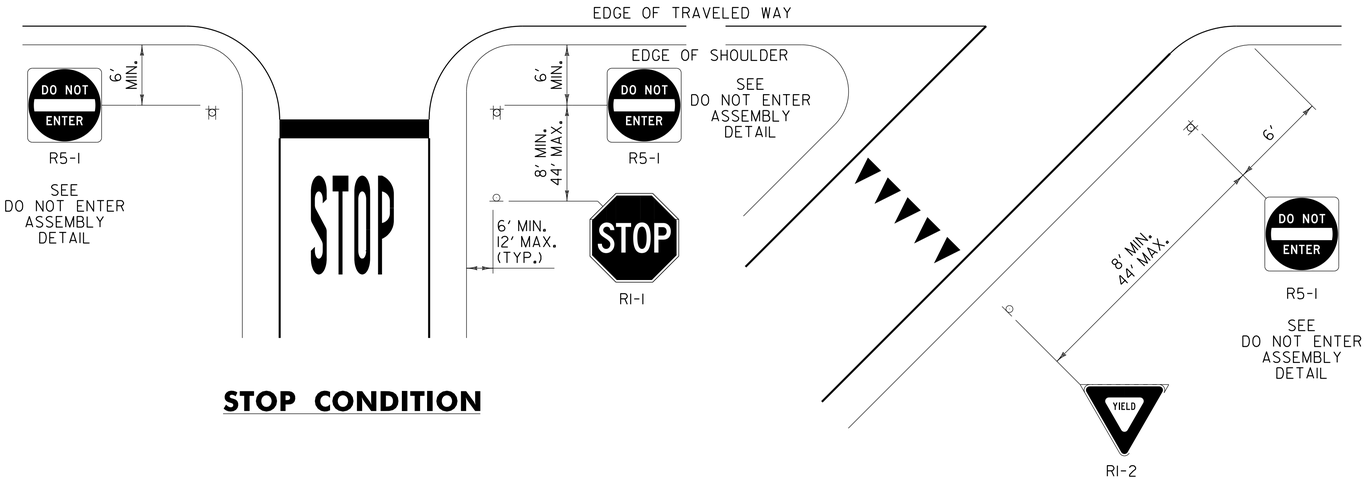

STOP CONDITION

EXIT RAMP SIGN LOCATION DETAILS

YIELD CONDITION

NOTES:

1. THE "STOP" (RI-1) SIGN SHOULD BE PLACED AS NEAR TO THE STOP BAR AS PRACTICAL. THE SIGN SHOULD BE PLACED TO MAXIMIZE VISIBILITY WITHIN THE RANGE OF OFFSETS SHOWN.
2. THE "YIELD" (RI-2) SIGN SHOULD BE PLACED AS NEAR TO THE YIELD MARKINGS AS PRACTICAL. THE SIGN SHOULD BE PLACED TO MAXIMIZE VISIBILITY WITHIN THE RANGE OF OFFSETS SHOWN.

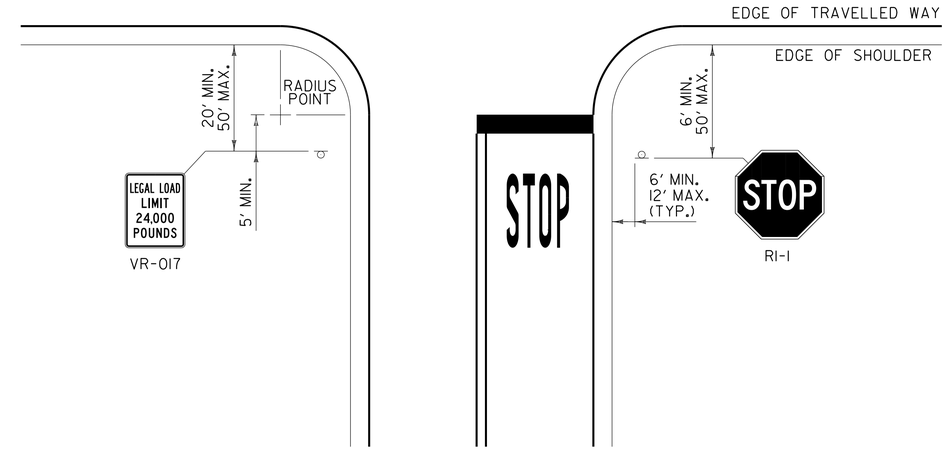

LEGAL LOAD LIMIT AND STOP SIGNS AT INTERSECTIONS WITH TOWN HIGHWAYS

NOTES:

1. THE "STOP" (RI-1) SIGN SHOULD BE PLACED AS NEAR TO THE STOP BAR AS PRACTICAL. THE SIGN SHOULD BE PLACED TO MAXIMIZE VISIBILITY WITHIN THE RANGE OF OFFSETS SHOWN.

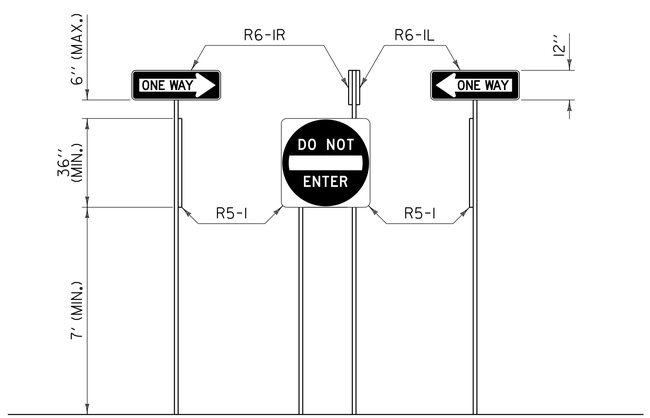

DO NOT ENTER ASSEMBLY

GENERAL NOTES:

1. WHEN INSTALLED, STREET NAME SIGNS SHOULD BE INSTALLED PERPENDICULAR TO APPROACHING MAINLINE TRAFFIC AND SHALL BE POSITIONED IN SUCH A WAY AS TO ENSURE THE BEST POSSIBLE VISIBILITY TO APPROACHING MAINLINE TRAFFIC FROM EACH DIRECTION. STREET NAME SIGNS MAY BE INSTALLED ABOVE SIDE ROAD STOP SIGN. IN CASES WHERE THE SIDE ROAD STOP SIGN POSITION WOULD NOT BE SUITABLE FOR A TOP-MOUNTED STREET NAME SIGN, OR OTHER SITE-SPECIFIC CONSTRAINTS, THE STREET NAME SIGN MAY BE INSTALLED INDEPENDENTLY ON EITHER CORNER OF THE INTERSECTION. THE STREET NAME SIGNS SHALL BE INSTALLED A MINIMUM OF SIX FEET FROM EDGE OF PAVEMENT ON THE MAINLINE ROUTE TO THE NEAREST EDGE OF SIGN.
2. STREET NAME SIGNS WITH A LENGTH EXCEEDING 42 INCHES SHALL BE INSTALLED ON TWO POSTS. NO MORE THAN TWO POSTS SHALL OCCUPY AN EIGHT FOOT TRAVEL PATH, UNLESS PROTECTED BY BARRIER.
3. THE "STOP" (RI-1) SIGN SHALL NOT BE MOUNTED LESS THAN FIVE FEET IN HEIGHT TO THE BOTTOM OF THE SIGN.

REV.	DATE	DESCRIPTION
0	OCT. 26, 2015	ORIGINAL APPROVAL

OTHER STANDARDS REQUIRED: NONE

VTRANS AND FHWA APPROVAL ON FILE WITH CONTRACT ADMINISTRATION

STANDARD SIGN PLACEMENT

VTrans Working to Get You There VERMONT AGENCY OF TRANSPORTATION

STANDARD

T - 56

VR–038

VR–039

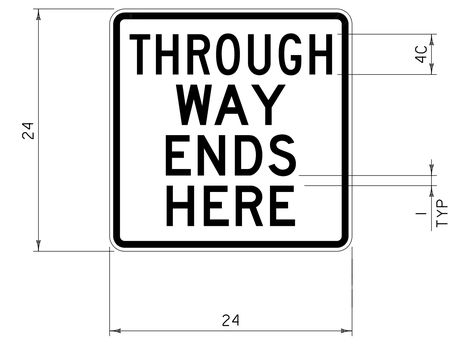

VR–040

NOTES:

1. TEXT SHALL BE 4D, UNLESS OTHERWISE NOTED.

VR–041

NOTES:

1. TEXT SHALL BE 4D, UNLESS OTHERWISE NOTED.

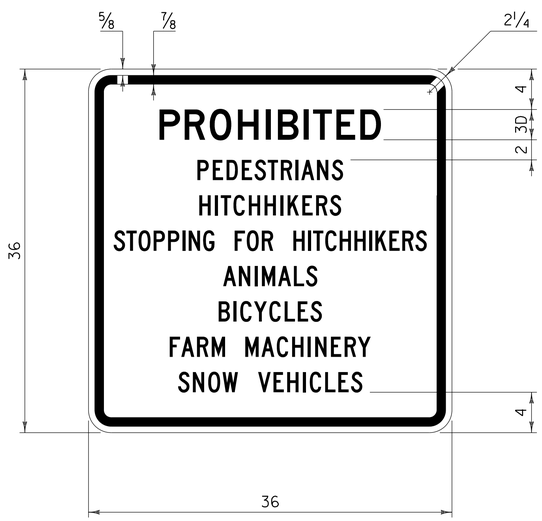

VR–046

NOTES:

1. TEXT SHALL BE 2C, UNLESS OTHERWISE NOTED.
2. SPACING TO BE 1½ INCHES, UNLESS OTHERWISE NOTED.

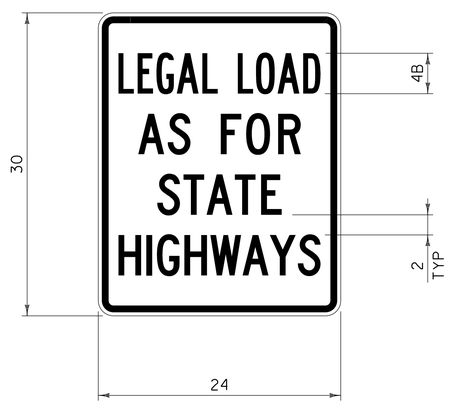

VR–079

NOTES:

1. TEXT SHALL BE 4C, UNLESS OTHERWISE NOTED.
2. "LEGAL LOAD" SHALL HAVE A SPECIFIED LENGTH OF 20 INCHES.
3. "HIGHWAYS" SHALL HAVE A SPECIFIED LENGTH OF 20 INCHES.

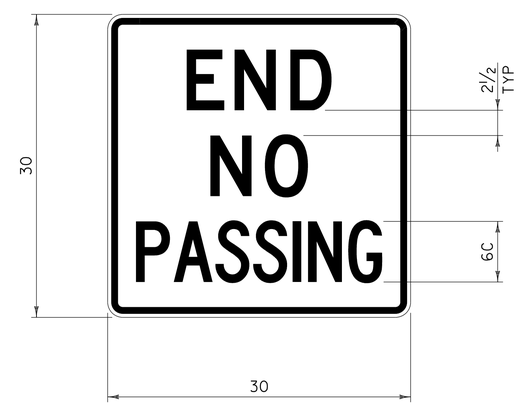

VR–417

NOTES:

1. TEXT SHALL BE 6D, UNLESS OTHERWISE NOTED.

GENERAL NOTES:

1. ALL LEGEND SHALL BE CENTERED VERTICALLY AND HORIZONTALLY UNLESS OTHERWISE NOTED.
2. CORNERS SHALL BE ROUNDED TO 1½ INCHES, UNLESS OTHERWISE NOTED.
3. BORDERS SHALL BE ⅝ INCH, UNLESS OTHERWISE NOTED.
4. MARGINS SHALL BE ⅜ INCH, UNLESS OTHERWISE NOTED.
5. ALL DIMENSIONS IN INCHES.

REV.	DATE	DESCRIPTION
0	APR. 25, 2016	ORIGINAL APPROVAL

OTHER STANDARDS REQUIRED: T-2

VTRANS AND FHWA APPROVAL ON FILE WITH CONTRACT ADMINISTRATION

VERMONT REGULATORY SIGN DETAILS

VTrans Working to Get You There VERMONT AGENCY OF TRANSPORTATION

STANDARD

T-71