DHCD Municipal Plan and Bylaw Intake

Submitted by: Anonymous user

Submitted time: Mar 12, 2025, 11:53:54 AM

Municipality

Essex

Regional Planning Commission

Chittenden County Regional Planning Commission

Submitter Details

Submitter's Name

Christopher Yuen

Submitter's Title

Community Development Director

Submitter's Email

cyuen@essexjunction.org

Select your Submission

Municipal Bylaw

Submission Type

Adopted

Bylaw Type

Unified Development

Date of Adoption

Feb 26, 2025

Who was the adopting authority?

Legislative Body

bylaw_adoptingauthority

Legislative Body

Upload Bylaw Reporting Form

PDF Bylaw Reporting Form 20250228.pdf
276KB

Upload Bylaw

PDF LDC Adopted 20250228_Print.pdf
6.4MB

Did the bylaw update result in changes to Zoning GIS Data?

Yes

Upload Updated GIS Data

ZIP VT_Data_-_Essex_Junction_Zoning.zip
143.2KB

Have you submitted GIS files to your Regional Planning Commission?

Yes

Have you submitted the Bylaw to your Regional Planning Commission?

Yes

State of Vermont
Agency of Commerce & Community Development
Department of Housing & Community Development
Municipal Planning Commission Bylaw Reporting Form

Provisional Form pursuant to Act 47 of 2023, The HOME Act

This provisional form issued pursuant to the Act 47 of 2023 is subject to change.

The Department welcomes feedback on the form's implementation of the Act.

Published June 30, 2023

Contacts: Jenni Lavoie, Contracts & Grants Administrator

jennifer.lavoie@vermont.gov, 802.828.1948
Jacob Hemmerick, Community Planning & Policy Manager
jacob.hemmerick@vermont.gov, 802.828.5249

Why is this form required?

Vermont's Municipal & Regional Planning & Development Act (24 V.S.A 4441) requires a municipal planning commission to prepare a report when considering an amendment to a bylaw. Act 47 of 2023 adds a requirement to the report to include findings on conformance with sections 4412, 4413, and 4414 of the Act. It also adds a requirement that the municipal planning commission provide the report to the Department of Housing and Community Development upon approval of an adoption or amendment. The report must be submitted with GIS (Geographic Information Systems) files, a complete bylaw, and information about municipal planning and governance and systems. The form will be published on the Vermont Planning Data Center, here: https://accdmaps.vermont.gov/MunicipalPlanningDataCenter/. Bylaw submission and posting supports the availability of Vermont's adopted municipal bylaws from a central digital source for statewide access and use.

How does a municipality submit the form?

Upon completion of the sections below, upload a saved version of the file here. The form must be submitted with the approved bylaw(s) and any GIS shapefiles (when adding or amending district boundaries of record on the Vermont Open Geodata Portal). The form can be saved as a Microsoft Word document (DOC) or converted to a Portable Document Format (PDF) file. If you need assistance completing the form, please reach out to the contact above or your municipality's regional planning commission.

Type of Bylaw Filing

Select all that apply.

☐ New bylaw(s)
☒ Amendment to existing bylaw(s)
☐ Repeal of existing bylaw(s)

Explain multiple selections.

Type of Bylaw(s)

Select all that apply.

☒ Unified Development *(select all bylaws included in the unified bylaws below)*
☒ Zoning

Does the bylaw add or change any zoning districts or boundaries?

☒ Yes
☐ No

☒ Subdivision
☐ Interim
☒ Flood Hazard
☒ River Corridor
☐ Shoreland Protection
☐ Other: (*explain)*

Vermont Municipal Bylaw Reporting Form

Date of Hearing(s)

Planning Commission Hearing(s) *(enter date[s])*

November 7th, 2025

Legislative Body Hearing(s) *(enter date[s])*

February 26th, 2025

Date of Adoption

Skip this section if the bylaw is proposed for hearing.

Date of Popular Election *(enter date only if subject to a popular election/vote)*

Date of Last Action *(enter date of final approval action by voters or legislative body)*

February 26th, 2025

Bylaw Summary & Statement of Purpose

Provide a brief explanation of the bylaw and a statement of purpose (per 24 V.S.A. 4441). Use as much space as needed.

1. Replacement and reorganization of sign regulations to be content-neutral, based on 2015 and 2022 Supreme Court caselaw specifying that local governments may only regulate signage based on content neutral criteria such as size, materials, lighting, moving parts, and portability. The text and formatting of the amended sign regulations have been adapted from the zoning text of a nearby municipality (Burlington VT), with specific regulations adjusted based on local context.
2. Adjustment of density limits in residential and Residential-office districts to meet the requirements of the Vermont HOME Act of 2023 (Act 47) and to help meet statewide housing production goals.
3. Adjustment of site layout and dimensional standards to allow and encourage the replication of historic development patterns for duplexes, triplexes, and four-plexes

Findings on Municipal Plan Furtherance

Explain how the bylaw conforms with or furthers the goals and policies contained in the municipal plan. Use as much space as needed.

The proposed amendments conform with the goals and policies of the City's Comprehensive Plan by enabling increased housing stock, encouraging economic development, and reducing environmental impact as called for in the Comprehensive Plan. This is achieved through various technical requirements and procedural adjustments in the zoning bylaw.

Findings on Safe & Affordable Housing

Explain the effect of the bylaw on the availability of safe and affordable housing. Use as much space as needed.

The bylaw amendments is expected to have a positive impact on the availability of safe and affordable housing. The amendments adjusts density and dimensional requirements as well as design standards for small scale housing projects to provide property owners and builders more flexibility in site layout. The amendments also reduce procedural barriers the permitting of duplexes, triplexes, and fourplexes.

Specific changes related to the availability of safe and affordable housing include:

• Definition of “multi-family dwelling” has been modified to exclude triplexes and fourplexes. [Section 201.C]
• Definition of “subdivision” has been modified to exclude multi-family developments that do

Findings on Required Provisions & Prohibited Effects

Explain how the bylaw conforms with 24 V.S.A. 4412. Use as much space as needed.

Include explanations on how the bylaws conform with these provisions (as applicable):

- *Mobile, modular and prefabricated housing*
- *Mobile home parks*
- *Duplex uses*
- *Multi-unit dwelling uses*
- *Accessory dwelling unit uses*
- *Residential care homes or group homes*
- *Hotels for emergency housing*
- *Existing small lots*
- *Required frontage*
- *Home occupations*
- *Childcare home or facility*
- *Heights of renewable energy structures*
- *Nonconformities*
- *Communications antennae and facilities*
- *Planting projects in flood hazards*
- *Accessory on-farm businesses*
- *Lot and dimensional standards for minimum dwelling unit density*
- *Density for affordable housing*

The bylaw amendments conform to the requirements of 24 V.S.A. §4412.

In conformance with 24 V.S.A. § 4412(1)(D)'s requirements on Multi-unit dwelling uses:
• The Multi-Family-3 (MF-3) and Residential-Office (R-O) zoning districts’ density limits have been raised to 6 units per lot to enable a smooth density gradient between the city center and the outlying Residential 1 and Residential 2 (R1 and R2) zoning districts, where four-plexes have been permitted since the passage the HOME Act (Act 47) of 2023. [Section 603.D]

In conformance with 24 V.S.A. § 4412(5)'s required provision on childcare facilities:
• Added Day Care and Family Care homes and facilities as permitted and conditional uses in the Planned Agriculture (PA) and Highway-Arterial (HA) districts to support existing and future

Findings on Limitations on Municipal Bylaws

Explain how the bylaw conforms with 24 V.S.A. 4413. Use as much space as needed.

Specific amendments relating the requirements of 24 V.S.A. §4413 include the following:

• References to “Church” have been changed to “Place of Worship” for more cultural inclusivity.
• Limitations on municipal powers to regulate certain uses such as Schools, Hospitals, and Emergency Shelters have been clarified in accordance with 24 V.S.A. § 4413. [Section 502.C]

Include explanations on how the bylaws conform with these provisions (as applicable):

- *State- or community-owned and -operated institutions and facilities*
- *Public and private schools and other institutions*
- *Places of worship*
- *Public and private hospitals*
- *Regional solid waste management facilities*
- *Hazardous waste management facilities*
- *Emergency shelters*
- *Required agricultural practices*
- *Accepted silvicultural practices*
- *Solar energy devices*
- *Ancillary telecommunications improvements and lines*

Findings on Permissible Types of Regulation

Explain how the bylaw conforms with 24 V.S.A. 4414. Use as much space as needed.

The amendments fall within the permissible types of regulations under 24 V.S.A. §4414. In addition to grammar corrections and minor formatting changes, the following changes are proposed:

• Zoning district acronyms have been standardized for consistency.
• References to “Use Table”, “Table of Uses” and “Use Chart” have been standardized to “Use Chart”.
• Removed most sign definitions which were integrated within Sign Standards in Section 714. [Section 201.G]
• Removed Sections 804 and 805 on Non-Conforming Signs, now located in Sign Standards.
• Clarified the definition of “Temporary Structure” [Section 201.C]

Select all regulations adopted by the municipality:

- ☒ Zoning (§4414)
  - ☒ Downtown, Village Center, and Growth Center Districts
  - ☒ Agricultural, Rural Residential, Forest & Recreation Districts
  - ☐ Airport Hazard Areas
  - ☐ Shorelands
  - ☒ Design Review Districts
  - ☒ Historic District/Landmark Bylaws
  - ☒ River Corridors and Buffers
- ☒ Overlay Districts (§4414)

List overlays:

Design Review Overlay, Historic Preservation Overlay,
North Lincoln Overlay, Professional Office Overlay

- ☒ Conditional Use Review (§4414)
- ☒ Parking & Loading Standards (§4414)
- ☒ Performance Standards (§4414)
- ☒ Energy Resource Standards (§4414)
- ☒ Inclusionary Zoning (§4414)
- ☒ Waiver Provisions (§4414)
- ☒ Stormwater Management Standards (§4414)
- ☒ Wireless Telecommunication Bylaws (§4414)
- ☒ Water/Wastewater Permit Sequencing Standards (§4414)
- ☒ Green Development Incentives (§4414)
- ☐ Solar Screening Standards (§4414)

Municipal Plan Future Land Uses & Density Compatibility

Explain how the bylaw is compatible with the proposed future land uses and densities of the municipal plan.

The proposed amendments are compatible with the proposed future land uses and densities of the municipal plan, except where superseded by new requirements of state statute.

Planned Community Facilities

Explain how the bylaw carries out, as applicable, any specific proposals for any planned community facilities.

The proposed amendments do not carry out any specific proposals for planned community facilities and it would not impact any plans for community facilities.

Municipal Planning Implementation Information

Upon adoption of the bylaw(s), select all elements of the municipal planning program that apply in the municipality:

- ☒ Unexpired Municipal Plan
- ☒ RPC-Approved Municipal Plan & Confirmed Planning Process (§4350)
- ☐ Interim Bylaws (§4415)
- ☒ Site Plan Review (§4416)
- ☒ Planned Unit Development (§4417)
- ☒ Subdivision (§4418)
- ☒ Administrative approvals of minor subdivisions/boundary adjustments (§4463)
- ☒ Unified Development Bylaws (§4419)
- ☐ Local Act 250 Review of Municipal Impacts (§4419)
- ☒ On The Record Review/Adopted Municipal Administrative Procedures (§4471)
- ☒ Official Map (§4421)

Vermont Municipal Bylaw Reporting Form

☐ Public Facilities Phasing (§4422)
☒ Transfer Development Rights (§4423)
☐ Freestanding Shorelands Bylaws (§4424)
☐ Freestanding River Corridor Protection Areas (§4424)
☐ Freestanding Flood or Hazard Areas (§4424)
☒ Enrolled in the National Flood Insurance Program
☐ Other Special or Freestanding Bylaws (§4424)

List

☒ Capital Budget & Program (§4430)
☐ Impact Fees (Chapter 131, §4422)
☒ Judicial Bureau Ticketing Option for Enforcement (§4452 & 1974a of Title)
☒ Advisory Commissions/Committees (§4433(1))
☐ Historic Preservation Commissions (§4433(3))
☐ Design Review Commissions (§4433(4))
☐ Housing Commissions (§4433(5))
☒ Development Review Board (§4460)
☐ Zoning Board of Adjustment (§4460)
☐ Joint Board of Adjustment Development Review Board (§4460)
☒ Full-time Administrative Officer
☐ Part-time Administrative Officer
☐ Volunteer/stipend Administrative Officer
☒ Staff planner(s)
☒ Availability of planning Information on municipal website:
    ☒ Municipal plan and maps
    ☒ Bylaws
    ☒ Fee schedule
    ☒ Contact information for administrative officer
    ☒ Information about Planning Commission
    ☒ Information about the Appropriate Municipal Panel (ZBA/DRB)

Primary website URL:

essexjunction.org

City of Essex Junction

LAND DEVELOPMENT CODE

ADOPTED

SEPTEMBER 22, 1992

REVISED

APRIL 14, 1998
SEPTEMBER 14, 1998
JUNE 29, 1999
JUNE 13, 2000
MAY 15, 2001
APRIL 1, 2003
APRIL 13, 2004
MAY 24, 2005
APRIL 17, 2007
MARCH 29, 2011
DECEMBER 13, 2016
SEPTEMBER 14, 2022
JUNE 14, 2023
FEBRUARY 26, 2025

LAND DEVELOPMENT CODE
TABLE OF CONTENTS

CHAPTER 1: PURPOSE, APPLICATION AND SEVERABILITY 17

SECTION 101: TITLE 17
SECTION 102: PURPOSE 17
SECTION 103: AUTHORITY 17
SECTION 104: SEVERABILITY 17
SECTION 105: ABROGATION 17

CHAPTER 2: DEFINITIONS AND RULES OF CONSTRUCTION 18

SECTION 201: DEFINITIONS 18
A. Interpretation: 18
B. Official Plan 18
C. General Definitions: 18
D. Transit Oriented Development. 36
E. Flood Plain Management Definitions. 38
F. Sewer Regulation Definitions. 41
G. Sign Regulation Definitions. 43
H. Stormwater Regulation Definitions. 43
I. Riparian Buffer District Definitions. 45
SECTION 202: GENERAL RULES 46

CHAPTER 3: DECISION MAKING AND ADMINISTRATIVE BODIES 48

SECTION 301: CITY COUNCIL 48
SECTION 302: PLANNING COMMISSION 48
A. Creation 48
B. Powers and Duties 48
C. Membership 48
D. Qualifications 48
E. Officers 49
F. Quorum 49
G. Decisions 49
SECTION 303: DEVELOPMENT REVIEW BOARD 49
A. Creation 49
B. Powers and Duties 49
C. Membership 49
D. Qualifications 49
E. Officers 50
F. Quorum 50
G. Decisions 50
SECTION 304: COMMUNITY DEVELOPMENT DEPARTMENT 50
A. Composition 50
B. Duties and Responsibilities of the Community Development Department. 50
C. Duties of the Community Development Director. 50
D. Duties of the Administrative Officer. 50
SECTION 305: PUBLIC WORKS SUPERINTENDENT 51
SECTION 306: WATER QUALITY SUPERINTENDENT 51

CHAPTER 4: REGULATION OF LAND USE ACTIVITIES 52

SECTION 401: APPROVALS REQUIRED 52
SECTION 402: PROHIBITED ACTIVITIES 52
SECTION 403: EXEMPT ACTIVITIES 53
SECTION 404: EFFECT OF PRIOR APPROVALS. 53

CHAPTER 5: DEVELOPMENT REVIEW PROCEDURES 54

SECTION 501: PROCEDURES OF GENERAL APPLICABILITY 54
A. Pre-Application Conference 54
B. Filing of Applications 54
C. Determination of Completeness 54
D. Notice of Public Hearings and Public Meetings 54
E. Public Hearing Procedures: 55
F. Public Meetings 55
G. Computation of Time 56
SECTION 502: APPROVAL PROCEDURES FOR ACTIVITIES REQUIRING REVIEW UNDER CHAPTERS 6 AND 7 56
A. Zoning Permit Requirement 56
B. Approval of Permitted Uses 58
C. Approval of Conditional Uses: 58
D. Approval of Temporary Uses 59
E. Professional Office Development 60
F. Approval of Site Plans 61
G. Approval of Home Occupations 65
H. Approval of Signs 66
I. Approval of Accessory Apartments 66
J. Approval of Activities Regarding Non-conforming Uses 66
K. Approval of Activities Regarding Non-complying Structures 67
L. Approval of Development Activities on Existing Small Lots 67
M. Planned Unit Development (PUD) 67
N. Telecommunications 68
O. Master Plans 70
SECTION 503: SUBDIVISIONS 71
A. Purpose 71
B. Classification 71
C. Public Meetings/Public Hearings 72
D. Waivers 72
E. General Standards of Review 72
F. Concurrent Reviews 72
G. Effects of Approval or Denial 72
H. Application Submittal Requirements 72
I. Time Limitations 77
J. Consolidated Applications 77
K. Filing of Approved Subdivision Final Plat 77
L. Plat Void if Revised after Approval 77
M. Appeals. 78
SECTION 504: APPROVAL OF ACTIVITIES INVOLVING PUBLIC SEWERS 78
A. Review Requirement 78

B. Review Standards *78*
C. Application Requirements *78*
D. Review Procedures *78*
E. Appeals *78*
F. Expiration of Approvals *78*
SECTION 505: APPROVAL OF ACTIVITIES INVOLVING PRIVATE SEWERS 79
A. Review Requirement *79*
B. Review Standards *79*
C. Review Procedures *79*
D. Appeals *79*
E. Expiration of Approvals *79*
SECTION 506: APPROVAL OF WAIVERS TO STANDARDS OF SECTION 718.B 79
A. Review Required *79*
B. Review Standards *79*
C. Review Procedures *79*
D. Appeals/Waivers *79*
E. Appeals *80*
SECTION 507: APPROVAL OF ACTIVITIES INVOLVING PUBLIC WATER LINES 80
A. Review Requirement *80*
B. Review Procedures and Standards *80*
C. Expiration of Approvals. *80*
D. Appeals *80*
SECTION 508: APPROVAL OF ACTIVITIES INVOLVING PRIVATE WATER SUPPLY 80
A. Review Requirement *80*
B. Review Procedures and Standards *81*
C. Expiration of Approvals *81*
D. Appeals *81*
SECTION 509: ACTIVITIES INVOLVING ACCESS TO PUBLIC ROADS 81
A. Review Required *81*
B. Review Procedures and Standards *81*
C. Application Requirements *82*
D. Expiration of Approvals *82*
SECTION 510: ISSUANCE OF CERTIFICATES OF OCCUPANCY 82
A. Purpose *82*
B. Requirement for Certificate of Occupancy *82*
C. Temporary Certificate of Occupancy *82*
D. Requirements *82*
SECTION 511: GENERAL REVIEW PROCEDURES FOR PLANNED UNIT DEVELOPMENTS 82
A. Purpose *82*
B. Review Requirements and Review Standards *83*
C. Conceptual Plan *83*
SECTION 512: APPROVAL OF ACTIVITIES INVOLVING A NEW CONNECTION TO THE PUBLIC STORM DRAINAGE SYSTEM 87
A. Review Requirement *87*
B. Review Standards *87*
C. Application Requirements *87*
D. Review Procedures *87*
E. Appeals *88*
F. Expiration of Approvals *88*

SECTION 513: APPROVAL OF ACTIVITIES INVOLVING THE CONSTRUCTION OF A STORMWATER SYSTEM 88
A. Review Requirement *88*
B. Review Standards *88*
C. Application Requirements *88*
D. Review Procedures *89*
E. Appeals *89*
F. Permits for Stormwater Discharges Associated with Construction Activities *89*
G. Expiration of Approvals *89*
SECTION 514: APPROVAL OF ACTIVITIES INVOLVING THE DISTURBANCE OF MORE THAN 0.5 ACRE OF LAND 89
A. Review Requirement *89*
B. Review Standards *89*
C. Application Requirements *89*
D. Review Procedures *90*
E. Appeals *90*
F. Expiration of Approvals *90*
SECTION 515: APPROVAL OF ACTIVITIES INVOLVING THE DISTURBANCE OF EQUAL TO OR GREATER THAN ONE (1) ACRE AND/OR THE CREATION OF MORE THAN 0.5 ACRE OF IMPERVIOUS SURFACE 90
A. Review Requirement *90*
B. Review Standards *90*
C. Application Requirements *90*
D. Review Procedures *90*
E. Appeals *90*
F. Expiration of Approvals *90*
SECTION 516: APPROVAL OF ACTIVITIES INVOLVING DEVELOPMENT WITHIN 200 FEET OF A WATERWAY, FLOODPLAIN OR WETLAND 91
A. Review Requirement *91*
B. Review Standards *91*
C. Application Requirements *91*
D. Review Procedures *91*
E. Appeals *91*
F. Expiration of Approvals *91*
G. Conditional Use Review *91*
H. Riparian Buffer Landscaping Requirements *92*
I. Exceptions *94*

CHAPTER 6: ZONING DISTRICTS REGULATIONS 95

SECTION 600: OFFICIAL ZONING MAP 95
A. Map Changes *95*
B. Map Interpretation *95*
C. Setback Requirements on Corner Lots *95*
SECTION 601: MULTI-FAMILY RESIDENTIAL 1 (MF1) 95
A. Purpose *95*
B. Lot Size/Lot Coverage *96*
C. Setback Requirements *96*
D. Permitted and Conditional Uses *96*
E. Parking Requirements *96*
F. Building Height. *96*

G. Planned Unit Development *97*
SECTION 602: MULTI-FAMILY RESIDENTIAL 2 (MF2) 97
A. Purpose *97*
B. Lot Size/Lot Coverage *97*
C. Setback Requirements *97*
D. Permitted and Conditional Uses *97*
E. Parking Requirements *98*
F. Building Height *98*
G. Planned Unit Development *98*
SECTION 603: MULTI-FAMILY RESIDENTIAL 3 (MF3) 98
A. Purpose *98*
B. Lot Size/Lot Coverage *98*
C. Setback Requirements *98*
D. Maximum Number of Dwelling Units *99*
E. Permitted and Conditional Uses *99*
F. Parking Requirements *99*
G. Building Height. *99*
H. Planned Unit Development *99*
SECTION 604: VILLAGE CENTER (VC) 99
A. Purpose *99*
B. Lot Size/Lot Coverage *100*
C. Setback Requirements *100*
D. Permitted and Conditional Uses *100*
E. Design Review and Historic Preservation *100*
F. Parking *108*
G. Planned Unit Development *108*
H. Building Height. *108*
SECTION 605: HIGHWAY-ARTERIAL DISTRICT (HA) 108
A. Purpose *108*
B. Density/Lot Coverage. *109*
C. Setback Requirements *109*
D. Permitted and Conditional Uses *109*
E. Parking Requirements *109*
F. Building Height *109*
G. Planned Unit Development *109*
SECTION 606: MULTI-FAMILY/MIXED-USE-1 DISTRICT (MF-MU1) 110
A. Purpose *110*
B. Density/Lot Coverage. *110*
C. Setback Requirements *110*
D. Permitted and Conditional Uses *110*
E. Parking Requirements *110*
F. Building Height *111*
G. Planned Unit Development *111*
SECTION 607: MULTI-FAMILY/MIXED-USE-2 DISTRICT (MF-MU2) 111
A. Purpose *111*
B. Density/Lot Coverage *111*
C. Setback Requirements *112*
D. Permitted and Conditional Uses *112*
E. Parking Requirements *112*

F. Building Height. ... 112
G. Planned Unit Development ... 112
SECTION 608: TRANSIT ORIENTED DEVELOPMENT (TOD) ... 112
A. Purpose ... 113
B. Applicability ... 113
C. Density/Lot Coverage ... 114
D. Setback Requirements ... 114
E. Building Frontage, Façade and Entry ... 114
F. Building Height. ... 114
G. Permitted and Conditional Uses ... 114
H. Access to Public Streets ... 114
I. Parking Requirements and Location ... 115
J. Street and Sidewalk Regulations ... 115
K. Planned Unit Development ... 116
L. Special Uses ... 116
SECTION 609: RESIDENTIAL-OFFICE (R-O) ... 116
A. Purpose ... 116
B. Lot Size/Lot Coverage ... 116
C. Setback Requirements ... 117
D. Maximum Number of Dwelling Units ... 117
E. Permitted and Conditional Uses ... 117
F. Parking Requirements ... 117
G. Building Height ... 117
H. Special Standards for Residential Conversions ... 117
I. Special Standards for Office Conversions ... 118
J. Standards for Existing Non-Residential Structures ... 119
SECTION 610: OPEN SPACE DISTRICT ... 119
A. Purpose ... 119
B. Lot Size/Lot Coverage ... 119
C. Setback Requirements ... 119
D. Permitted and Conditional Uses ... 119
E. Parking Requirements ... 119
F. Building Height ... 119
SECTION 611: LIGHT INDUSTRIAL (LI) ... 120
A. Purpose ... 120
B. Density/Lot Coverage ... 120
C. Setback Requirements ... 120
D. Permitted and Conditional Uses ... 120
E. Parking Requirements ... 120
F. Building Heights ... 120
G. Special Standards ... 120
SECTION 612: PLANNED EXPOSITION (PE) ... 120
A. Purpose ... 121
B. Density/Lot Coverage ... 121
C. Setback Requirements ... 121
D. Permitted and Conditional Uses ... 121
E. Parking Requirements ... 121
F. Building Heights ... 121
G. Exposition Center PUD ... 121

SECTION 613: PLANNED AGRICULTURE (PA) 125
A. Purpose 125
B. Density/Lot Coverage 126
C. Setback Requirements 126
D. Permitted and Conditional Uses 126
E. Parking Requirements 126
F. Building Height 126
G. Agriculture PUD 127
SECTION 614: FLOOD PLAIN (FP) 129
A. Purpose 129
B. Applicability 130
C. Warning And Disclaimer of Liability 130
D. Permitted and Conditional Uses 130
E. Review Procedures 130
F. Base Flood Elevations and Floodway Limits 130
G. Development Standards 131
H. Duties and Responsibilities of Staff 132
I. Variances to the Development Standards 132
SECTION 615: MIXED COMMERCIAL USE DISTRICT (MCU) 133
A. Purpose 133
B. Lot Size/Lot Coverage 133
C. Setback Requirements 133
D. Permitted and Conditional Uses 133
E. Parking Requirements 133
F. Building Height. 133
G. Planned Unit Development 133
SECTION 616: PROFESSIONAL OFFICE OVERLAY DISTRICT 134
A. Purpose 134
B. Review 134
C. Conditions 134
D. Site Plan 134
SECTION 617: NORTH LINCOLN STREET OVERLAY DISTRICT (NLSO) 134
A. Purpose 134
B. Permitted Uses 135
C. Dimensional Standards 135
D. Density 135
SECTION 618: RESIDENTIAL 1 (R1) 135
A. Purpose 135
B. Lot Size/Lot Coverage 135
C. Setback Requirements 135
D. Maximum Number of Dwelling Units 136
E. Permitted and Conditional Uses 136
F. Parking Requirements 136
G. Building Height 136
H. Special Standards 136
SECTION 619: RESIDENTIAL 2 (R2) 137
A. Purpose 137
B. Lot Size/Lot Coverage 137
C. Setback Requirements 137

D. Maximum Number of Dwelling Units ... 138
E. Permitted and Conditional Uses ... 138
F. Parking Requirements ... 138
G. Building Height ... 138
H. Special Standards ... 138
SECTION 620: DESIGN REVIEW OVERLAY DISTRICT (DRO) ... 139
A. Purpose ... 139
B. Applicability ... 140
C. Design Review Procedures ... 140
D. Design Review Standards ... 140
SECTION 621: HISTORIC PRESERVATION OVERLAY DISTRICT (HRO) ... 143
A. Purpose ... 143
B. Applicability ... 143
C. Historic Preservation Procedures ... 144
D. Historic Preservation Standards ... 144
E. Demolition of Historic Structures ... 145
SECTION 622: USE CHART ... 147
A. District Abbreviations ... 147
B. Permitted Uses ... 147
C. Conditional Uses ... 147
D. Special Uses ... 147
E. Prohibited Uses ... 147
F. Uses not Specified in Use Chart ... 147
G. The Use Chart ... 148

CHAPTER 7: GENERAL DEVELOPMENT STANDARDS ... 155

SECTION 701: PURPOSE ... 155
SECTION 702: APPLICABILITY ... 155
SECTION 703: PARKING AND LOADING ... 155
A. Purpose of Parking and Loading Provisions ... 155
B. Loading Requirements ... 155
C. Off-Street Parking Requirements. ... 156
D. Drive-through Facilities ... 158
E. Parking or storage of junk vehicles ... 158
F. Parking of Commercial Vehicles in Residential Areas ... 158
G. Parking of Recreational Vehicles ... 158
H. Parking of Recreational Vehicles on Public Property ... 159
I. Vehicles For Sale ... 159
J. Parking of Storage Trailers, Storage Boxes and Similar Structures ... 159
K. Other Parking Standards and Applicability ... 160
L. Bicycle Parking and Storage Standards and Applicability ... 162
SECTION 704: LIGHTING ... 167
A. Purpose ... 167
B. General Standards ... 167
C. Review of Lighting Plans ... 167
D. Parking Lot and Pathway Illumination ... 168
E. Illumination of Building Facades and Landscaping: ... 169
F. Roadway Lighting: ... 169
G. Recreation Facility Lighting: ... 170

H. Review of Lighting Plans *170*
I. Lighting of Gasoline Station/Convenience Store Aprons and Canopies Where Allowed: *170*
J. Lighting of Exterior Display/Sales Areas: *171*
SECTION 705: CURB CUT AND ACCESS TO PUBLIC STREETS 171
A. Purpose *171*
B. Residential Uses *171*
C. Commercial and Industrial *172*
D. General Standards *172*
E. Alterations Within Public Right-of-way. *173*
SECTION 706: ACCESSORY USES AND STRUCTURES 174
A. Purpose *174*
B. General Requirements *174*
C. Set-back Exceptions *174*
D. Satellite Dish Antenna *176*
E. Residential Garages *176*
F. Storage sheds. Other Structures *177*
G. Outdoor Business Activities: *177*
H. Recycling Centers *177*
I. Solid Waste Collection Point. *177*
J. Dumpsters or Other Trash Containers: *178*
K. Tennis, Basketball or Volleyball Court *178*
L. Swimming Pools *178*
M. Garage Sales, Yard Sales *179*
SECTION 707: FENCES 179
A. Purpose *179*
B. Standards *179*
C. Exceptions *180*
SECTION 708: SCREENING/BUFFERING 180
A. Purpose *180*
B. Standards. *180*
SECTION 709: PRIVATE STREETS 181
A. Standards *181*
B. Existing Private Streets *181*
SECTION 710: VISIBILITY TRIANGLES 181
A. Purpose *181*
B. Intersections *181*
C. Driveways *182*
D. Exceptions *182*
SECTION 711: HOME OCCUPATIONS 182
A. Purpose: *182*
B. Review Criteria *183*
SECTION 712: OPEN SPACE REGULATIONS 184
SECTION 713: STORM WATER MANAGEMENT. 184
A. Purpose. *184*
B. Construction Site Stormwater Runoff Control *184*
C. Erosion and Sediment Control Plans *187*
D. Inspection Certifications *187*
E. Exemptions *188*
F. Stormwater Systems Designed for Turn Over to the City *188*

G. Maintenance of Permitted Stormwater Systems *188*
SECTION 714: SIGN STANDARDS. 189
A. Authority and Intent *189*
B. Permit Required *189*
C. Exemptions *189*
D. Prohibited Signs *192*
E. Temporary Signs *193*
F. Non-Conforming Signs *195*
G. Discontinuance and Removal *195*
H. Sign Permit Applications, Submission Requirements, Review and Decision-making *196*
I. Calculation of Sign Area and Height *196*
J. Sign Lighting *197*
K. Alternative Compliance *199*
L. Sign Types *200*
M. Location of Sign Types *212*
N. Subdivision, Multi-Family, and School Entrance Signs *215*
O. Maintenance of Signs *215*
P. Unlawful Cutting of Trees or Shrubs *216*
SECTION 715: TELECOMMUNICATIONS 216
A. Balloon Test *216*
B. Criteria For Approval and Conditions *216*
C. Continuing Obligations For Wireless Telecommunication Facilities *218*
D. Removal of Abandoned or Unused Facilities *218*
SECTION 716: FIRE ACCESS 218
A. Purpose *218*
B. General Standards *218*
SECTION 717: DAY CARE AND FAMILY CARE FACILITIES 219
A. Purpose *219*
B. General Standards: *219*
C. Day Care Facility Standards: *219*
D. Standards of Review *220*
E. Administrator Officer or Development Review Board Actions *220*
F. Exemptions *220*
SECTION 718: PERFORMANCE STANDARDS 220
A. Purpose/Applicability *220*
B. Sound *221*
C. Odor *222*
D. Explosives *222*
E. Smoke and Particulate Matter *222*
F. Hazardous materials *223*
G. Visual Impact *223*
H. Gas Transmission Lines and Facilities *224*
SECTION 719: LANDSCAPE AND TREE PLANTING REQUIREMENTS 225
A. Purpose and Intent *225*
B. Low Impact Design approaches and Green Stormwater Best Management Practices *225*
C. Tree Protection *225*
D. Shade Trees *225*
E. Landscaping *226*
F. Approved Plant Materials *230*

G. Performance Bond *231*
SECTION 720: LOT FRONTAGE 231
A. Lot Frontage *231*
B. Required Frontage *231*
SECTION 721: ACCESSORY APARTMENTS 231
A. Purpose *231*
B. Standards. *231*
SECTION 722: PROFESSIONAL OFFICE OVERLAY DISTRICT 232
A. Purpose *232*
B. Approval Process *232*
C. Conditions *233*
D. Site Plan *233*
SECTION 723: PLANNED UNIT DEVELOPMENT (PUD) 233
A. Planned Unit Development *233*
B. Design Considerations and Associated Waivers *234*
C. Findings Review Requirements *237*
SECTION 724: RAISING, KEEPING, OR HARBORING LIVESTOCK 237
SECTION 725: ABANDONMENT OF STRUCTURES 237
SECTION 726: OUTDOOR CANNABIS CULTIVATION 238
SECTION 727: FOOD TRUCKS 238
A. Purpose *238*
B. General Standards: *238*
C. Food Truck Standards: *238*

CHAPTER 8: NONCONFORMITIES 240

SECTION 801: NON-CONFORMING USES 240
A. Expansion of Non-Conforming Uses *240*
B. Change of Use *240*
C. Discontinuation of a Non-Conforming Use *240*
SECTION 802: NON-COMPLYING STRUCTURES 240
A. Disclaimer *240*
B. Maintenance, Repair and Expansion *240*
C. Reconstruction *241*
SECTION 803: EXISTING SMALL LOTS 241
SECTION 804: ENFORCEMENT; LIMITATIONS 241

CHAPTER 9: SUBDIVISIONS 242

SECTION 901: PURPOSE 242
SECTION 902: REQUIRED PERMITS 242
SECTION 903: APPLICABILITY 242
SECTION 904: GENERAL APPLICATION REQUIREMENT 242
SECTION 905: GENERAL STANDARDS 242
A. Conformity with Other Regulations *242*
B. Site Suitability *242*
C. Public Facilities. *242*
D. Protection of Significant Features *242*
E. Subdivision Name *243*
F. Lot requirements. *243*
G. Boundary Adjustments. *243*

SECTION 906: STREETS 243
A. General Standards 243
B. Arrangement 243
C. Design 244
D. Dead-end Streets 245
E. Dedications 245
F. Street Utilities Easements 246
G. Right-of-Way Widths 246
H. Curb Cuts 246
I. Street Surface 246
SECTION 907: EASEMENTS 246
SECTION 908: RECREATIONAL OPEN SPACE 246
A. Open Space Designation 247
SECTION 909: PEDESTRIAN AND BIKEWAY STANDARDS 247
A. General Standards 247
SECTION 910: INFRASTRUCTURE IMPROVEMENTS 248
SECTION 911: MONUMENTS AND LOT CORNER MARKERS 248
SECTION 912: STREET LIGHTS 248
SECTION 913: UTILITY LINES 249
SECTION 914: INSTALLATION/GUARANTEES 249
A. Performance Bond 249
B. Acceptance of Streets and Open Space 249
SECTION 915: AS-BUILT PLANS. 249
SECTION 916: OFF-SITE IMPROVEMENTS 250
SECTION 917: WAIVERS/EXCEPTIONS 250
A. Standards 250
SECTION 914: DEDICATIONS OF PUBLIC INFRASTRUCTURE 250
SECTION 915: PRIVATE INFRASTRUCTURE 251

CHAPTER 10: ENFORCEMENT 252

SECTION 1001: VIOLATIONS 252
SECTION 1002: ENFORCEMENT THROUGH THE JUDICIAL BUREAU 252

CHAPTER 11: SEWER REGULATIONS 253

SECTION 1101: SEWER USE RULES AND REGULATIONS 253
A. Building Sewers and Connections 253
B. Use of Sewers 254
C. Use of the Public Sewers 258
D. Powers and Authority of Inspectors 258
E. Penalties 258
F. Validity 259
G. Charges for Debt Service and Operation/Maintenance 259
H. Commercial and Industrial Cost Recovery System 260
I. Private Sewage Disposal 260
J. Private Sewers 261
K. Pump Stations 262
SECTION 1102: SEWER ALLOCATION 264
A. Allocation of Capacity 264
B. Expiration of Allocations 264

C. Assignability of Allocations *265*
D. Administration *265*

CHAPTER 12: RESERVED 266

CHAPTER 13: RESERVED 267

CHAPTER 14: WATER SYSTEM MANAGEMENT AND USE 268

SECTION 1401: APPLICABILITY 268
SECTION 1402: APPLICATIONS 268
SECTION 1403: METER REQUIREMENTS 268
SECTION 1404: WATER DAMAGE 268
SECTION 1405: DISCONTINUATION 268
SECTION 1406: ABATEMENT 269
SECTION 1407: WATER USAGE 269
SECTION 1408: FIRE HYDRANTS 269
SECTION 1409: WATER METERS 269
SECTION 1410: MULTIPLE USE OF METERS 269
SECTION 1411: METER FAILURES 269
SECTION 1412: WATER METER CONNECTIONS 269
SECTION 1413: PAYMENT 270
SECTION 1414: DELINQUENT PAYMENTS 270
SECTION 1415: OTHER CITY RIGHTS 270
SECTION 1416: WATER SUPPLY 270
A. Off-Site *270*
B. Exception *270*
C. Private Water Lines *271*
D. Construction Drawings and Technical Specifications *271*
SECTION 1417: PENALTIES 272

CHAPTER 15: RESERVED 273

CHAPTER 16: RESERVED 274

CHAPTER 17: APPEALS 275

SECTION 1701: ADMINISTRATIVE DETERMINATIONS 275
A. Purpose *275*
B. Filing of Application *275*
C. Staff Review *275*
D. Interested Persons *275*
E. Appeals *275*
F. Standards of Review *276*
SECTION 1702: APPEALS OF STAFF DECISIONS PURSUANT TO SECTION 502 276
A. Purpose *276*
B. Notice of Appeal *277*
C. Action by the Development Review Board *277*
D. Standards of Review *277*
SECTION 1703: REQUESTS FOR VARIANCES FROM THE REQUIREMENTS OF CHAPTERS 6 AND 7 277
A. Purpose *277*
B. Action by Development Review Board *277*
C. Standards of Review *277*

D. Effect of Approval or Denial *278*
SECTION 1704: APPEALS OF STAFF DECISIONS TO THE DEVELOPMENT REVIEW BOARD 278
A. Purpose *278*
B. Notice of Appeal *279*
C. Action by the Board *279*
D. Standard of Review *279*
SECTION 1705: APPEALS TO THE CITY COUNCIL 279
A. Purpose *279*
B. Notice of Appeal *279*
C. Action by the City Council *279*
D. Standard of Review *280*
E. Matters Not Requiring a Public Hearing *280*
F. Decisions of the City Council shall be final. *280*
SECTION 1706: APPEALS FROM DEVELOPMENT REVIEW BOARD DECISIONS 280
SECTION 1707: ON THE RECORD REVIEW 280

APPENDIX A: PUBLIC WORKS SPECIFICATIONS 1

SECTION 101: TITLE, PURPOSE AND APPLICABILITY 1
SECTION 102: STREET SPECIFICATIONS 1
SECTION 103: GRAVEL BASE - BOTTOM COURSE 2
SECTION 104: CRUSHER RUN - TOP COURSE 3
SECTION 105: BITUMINOUS CONCRETE PAVEMENT 4
SECTION 106: CEMENT CONCRETE CURB 5
SECTION 107: GRANITE CURB 6
SECTION 108: CEMENT CONCRETE SIDEWALK 7
SECTION 109: CEMENT CONCRETE DRIVEWAY APRONS (PRIVATE AND COMMERCIAL DRIVES) 9
SECTION 110: BITUMINOUS CONCRETE DRIVEWAY APRONS (PRIVATE AND COMMERCIAL DRIVES) 9
SECTION 111: RIGHT OF WAY MONUMENTS 9
SECTION 112: WATER DISTRIBUTION SPECIFICATIONS 10
SECTION 113: HYDRANTS 14
SECTION 114: SERVICE CONNECTIONS 15
SECTION 115: SANITARY SEWER SPECIFICATIONS. 16
SECTION 116: SERVICE CONNECTIONS 20
SECTION 117: STORM SEWER SPECIFICATIONS - STORM DRAINS 20
SECTION 118: RESTRICTIONS AND CONDITIONS OF RIGHT-OF-WAY 26
SECTION 119: INSPECTION 27
SECTION 120: FINAL INSPECTION CHECK LIST 28
SECTION 121: VARIATIONS AND WAIVERS 29
PUBLIC WORKS DETAILS 30
A. Street detail - Typical plan *30*
B. Street detail - Typical section with foam insulation *31*
C. Street detail – Typical section *32*
D. Street detail - Curb and concrete sidewalk *33*
E. Street detail - Residential driveway apron *34*
F. Street detail - Commercial/Industrial driveway apron *35*
G. Street detail - Sidewalk ramp *36*
H. Water distribution details - Mains & hydrants *37*
I. Water distribution details - Service connection *38*
J. Water Meter Minimum Clearance – ¾" Meter *39*

K. Water Meter Minimum Clearance- 1", 1 ½" & 2" Meters 40
L. Water and Irrigation Meter Plumbing Schematics 41
M. Sanitary sewer details – Manholes 42
N. Sanitary sewer details - Service connection 43
O. Sanitary sewer details - Chimney service connection for deep sewer 44
P. Water & sanitary sewer -Separation and crossing detail 45
Q. Trench detail – Flexible & rigid pipe 47
R. Storm sewer detail - Precast concrete catch basin 48
S. Storm sewer detail - Underdrain detail 49
T. Mailbox post detail 50
U. Street light details – Light pole, light base & light fixture 51

APPENDIX B: CITY COUNCIL'S POLICY FOR FUNDING ENGINEER PLAN REVIEW AND INSPECTIONS 1

ENGINEERING PLAN REVIEW AND INSPECTIONS POLICY 1
PLAN REVIEW 1
INSPECTIONS 1
SUMMARY 1

APPENDIX C: CITY COUNCIL'S POLICY FOR FUNDING DEVELOPMENT REVIEW BY THE CITY ATTORNEY .1

CITY ATTORNEY DEVELOPMENT REVIEW 1
PLAN AND DOCUMENT REVIEW 1
SUMMARY 1

ZONING MAP 1

CHAPTER 1: PURPOSE, APPLICATION AND SEVERABILITY

SECTION 101: TITLE

This Ordinance shall be entitled and may be referred to as the Land Development Code.

SECTION 102: PURPOSE

The purpose of this Land Development Code is to implement the Comprehensive Plan of the City of Essex Junction by establishing regulations, procedures and standards for review and approval of all development and use of land in Essex Junction. This Code is adopted to preserve public health, safety, comfort and general welfare, and to aid in the harmonious, orderly and progressive development of the City. This Code represents the minimum required standards for development and land use in Essex Junction. It is the intent of the City to meet or exceed these standards.

SECTION 103: AUTHORITY

The City is granted authority by the Vermont General Assembly to regulate activities and impacts associated with the development and use of land in the City. The Chapters contained in this Land Development Code are enacted pursuant to the statutory provisions set forth below:

A. Chapter 2: Definitions - As applicable below
B. Chapter 5: Development Review Procedures (Submission of Applications) - As applicable below
C. Chapter 6: Zoning District Regulations - 24 V.S.A., Chapter 117
D. Chapter 7: General Development Standards - 24 V.S.A., Chapter 117
E. Chapter 9: Subdivisions - 24 V.S.A., Chapter 117
F. Chapter 11: Sewer Regulations - 24 V.S.A., Chapter 101.
G. Chapter 14: Water System Management - 24 V.S.A., Chapter 89.
H. Appendix A: Public Works Specifications - City Charter, Section 203.

SECTION 104: SEVERABILITY

If any part or provision of this Code or application thereof to any person or circumstances is invalidated by a Court of competent jurisdiction, such judgment shall be limited to the part, provision or application being adjudicated. Said judgment shall not limit, affect or impair the validity of the remainder of this Code or the application thereof to any other persons or circumstances.

SECTION 105: ABROGATION

The provisions of this code shall not in any way impair or remove the necessity of compliance with any other local, state, or federal laws or regulations. Where this code imposes a greater restriction the provisions here shall take precedence.

CHAPTER 2: DEFINITIONS AND RULES OF CONSTRUCTION

SECTION 201: DEFINITIONS

(General Definitions, Flood Plain Management Determinations, Sewer Regulation Definitions, Sign Regulations Definitions). Words as defined herein shall be used to interpret provisions of this Code. Interpretation of any words not herein defined shall be made in accordance with the standards specified below.

A. Interpretation:

1. All interpretations of words not herein defined shall be reviewed in the context of the purpose or intent Sections of this Code and the Official Plan as adopted.
2. Words shall be interpreted through consultation with standard planning textbooks. Words with a unique planning definition shall be interpreted to include that definition.
3. Words which have a unique definition in state or federal law shall be deemed to include that meaning.
4. Words without a unique planning definition shall be deemed to be common usage as defined in standard dictionaries.

B. Official Plan

The Essex Junction Comprehensive Plan as adopted by the Village Trustees (prior to July 1, 2022) or by the City Council (after July 1, 2022) and filed with the City Clerk is the Official Plan of the City of Essex Junction. It is the clear intent of this Code to implement the provisions of the Comprehensive Plan and the Comprehensive Plan shall be consulted to determine the intent of any provisions of this Code. Ordinances, bylaws, or regulations enacted which are in clear conflict with the Comprehensive Plan shall not be adopted until and unless the Comprehensive Plan is amended.

C. General Definitions:

1. *"Abandonment"* shall mean to cease or discontinue a use or activity for a period of twelve (12) months, but excluding temporary or short-term interruption to use or activity during periods of remodeling, maintaining, or otherwise improving a facility, or during normal periods of vacation or seasonal closure.
2. *"Accessible Parking"* shall mean parking space designed to comply with standards of the American with Disabilities Act.
3. *"Accessory Apartment"* shall mean a small apartment created within an existing single family dwelling unit, as defined by state statute.
4. *"Accessory Structure"* shall mean a structure, the use of which is incidental and subordinate in size (50% or less) to the principal structures located on the same lot.
5. *"Accessory Use"* shall mean any use or structure which clearly meets the following conditions:
   (a) It is clearly incidental and customarily found in association with the principal use; and
   (b) It is subordinate in area, purpose and extent to the primary structure and

use of the lot; and

(c) It is not identified in the zoning district as a permitted or conditional principal use.

6. *"Aerodrome"* shall mean a location from which aircraft flight operations take place.

7. *"Additions"* shall mean any development activity which increases floor area or height of a building or structure.

8. *"Administrative Determination"* shall mean a written statement by Staff which approves or disapproves any request as provided herein or interprets a provision of this Code.

9. *"Adult Day Care Facility"* shall mean a facility which includes programs, services, and facilities designed to assist physically or mentally impaired adults to remain in their communities. These are persons who might otherwise require institutional or long-term care and rehabilitation.

10. *"Adverse Impact"* shall mean any addition or effect of a proposed use, site modification, or structure which may be harmful or injurious to public health, safety or other property; any addition or use which does not meet specific review criteria as established herein; or any proposed uses or structures which cumulatively may be harmful or injurious to public health, safety, or property.

11. *"Agent"* shall mean any individual, group, or corporation specifically authorized in writing to act on behalf of any party to a proceeding covered by this Code.

12. *"Agriculture"* or *"Agriculture Sales-Related Activity"* shall mean the use of property or structures for common farming-related activities necessary for crop and animal production. A plant or tree nursery shall be deemed an agricultural related activity. The sale of agricultural products or byproducts on agricultural property is deemed an "agriculture sales-related activity".

13. *"Agriculture PUD"* shall mean a Planned Unit Development (PUD) located in the Planned Agriculture District.

14. *"Alteration"* shall mean any change or modification to a structure.

15. *"Animal Boarding Facility"* or *"Kennel"* shall mean any land, structure, or facility designed and used for the temporary storage or housing of five (5) or more domesticated animals at any time; the housing, storage or raising of any animals as part of an active farm is not deemed to be an animal boarding facility.

16. *"Animal Exhibits"* shall mean any structure or property where animals are kept in captivity for public display with or without charge.

17. *"Animal Shelter"* shall mean any accessory structure or property which is used for housing or sheltering four (4) or fewer common household pets over three (3) months of age, outside of the principal permitted structure.

18. *"Antenna, Tower," or "Satellite Dish"* shall mean any device erected and designed to transmit or accept any type of radio, television, telephone or other electronic signals.

19. *"Application"* shall mean a written request for approval of a proposed use, building or activity as regulated herein.

20. *"Average Grade Building Height Allowance"* shall mean the building height shall

be no higher than that permitted in the district above preconstruction grade unless approved by the Planning Commission.

21. *"Bank"* shall mean any financial institution involved in the direct deposit or withdrawal of funds or a structure which houses facilities to deposit or withdraw funds electronically.

22. *"Bed and Breakfast"* shall mean any building, or portion thereof, of residential character which contains no more than four (4) sleeping rooms for rent for transient occupancy not exceeding (2) weeks, and where food is served family style.

23. *"Berm"* shall mean a mound of soil used for screening or landscaping which includes trees, shrubs or ground cover.

24. *"Bike Path"* shall mean any sidewalk, lane, or path designated and clearly marked by the City for use by bicycles. Nothing shall prevent a bike path from being utilized by pedestrians or other non-motorized conveyances.

25. *"Boarding House"* shall mean any establishment or charitable organization which provides meals and beds for pay for four (4) or more individuals for thirty (30) or more days in a residential dwelling.

26. *"Boundary Line Adjustment"* shall mean adjusting the line between two adjacent lots when the adjustment does not change the nature of any previous subdivision, does not create any new lots, and does not make any existing lot non-conforming.

27. *"Buffer"* shall mean an area required to separate low intensity land uses from more intensive land uses, or a mandated setback from a wetland, stream, river or utility.

28. *"Building"* shall mean any structure that encloses a space for sheltering any occupancy or use including the above ground placement of any type of fuel or oil tank; any structure, vehicle or preassembled building which is permanently attached to the ground or is located on the property for thirty (30) or more days shall be deemed a building. Recreational vehicles as defined herein shall not be deemed a building.

29. *"Building Height"* shall mean the vertical distance from the average finished grade elevation to the highest point of a parapet surrounding a flat roof, the mean height between eave and the highest ridge line of a pitched roof or the highest point of a roof of any other shape (Mansard, Gambrel, Etc), excluding chimneys and decorative cupolas, provided that they do not extend more than five feet above the highest point of the rest of the structure.

30. *"Building Line"* shall mean a line defining the nearest points to adjacent streets or property lines to which a building may be constructed or placed.

31. *"Building Materials Establishment"* shall mean any facility whose principal business is the sale of products to be used off site for construction and installation purposes.

32. *"Building, Principal"* shall mean a building in which the main or primary use of the lot is conducted.

33. *"Business Service"* shall mean a business which offers services to other businesses or individuals, including but not limited to, photocopying, blueprinting, insurance sales, financial management, computer and data processing, security services, interior cleaning and similar uses whose principal business is not the sale of goods or materials.

34. "*Caliper*" shall mean the measurement of the diameter of a tree measured as follows:

(a) A tree less than four (4) inches in diameter shall be measured six (6) inches above grade.

(b) A tree four (4) or more inches in diameter shall be measured twelve (12) inches above grade.

35. "Cannabis Retail Establishment" shall mean an establishment licensed by the Vermont Cannabis Control Board and the Local Control Commission to sell cannabis and cannabis products to adults 21 years of age and older for off-site consumption in accordance with 7 V.S.A Chapter 33 [or current state definition at time of application].

36. "Cannabis Wholesale Establishment" shall mean an establishment licensed by the Vermont Cannabis Control Board and the Local Control Commission to purchase, process, transport, and sell cannabis products in accordance with 7 V.S.A Chapter 33 [or current state definition at time of application].

37. "Cannabis Medical Dispensary" shall mean a business organization licensed under 18 V.S.A chapter 86, 7 V.S.A chapter 37 to dispense cannabis products for medical purposes [or current state definition at time of application].

38. "Cannabis Cultivator Establishment" shall mean an establishment licensed by the Vermont Cannabis Control Board and the Local Control Commission to engage in the cultivation of cannabis in accordance with 7 V.S.A Chapter 33 [or current state definition at time of application].

39. "Cannabis Manufacturing Establishment, Tier 1" shall mean an establishment licensed by the Vermont Cannabis Control Board and the Local Control Commission to manufacture cannabis products in accordance with 7 V.S.A Chapter 33 [or current state definition at time of application]. A tier 1 manufacturer may purchase, process, manufacture, transfer, and sell Cannabis as well as finished and in-process Cannabis Products to other Licensees but not directly to consumers. A tier 1 manufacturer may produce Cannabis Products using the same methods as a tier 2 manufacturer, but not a tier 3 manufacturer. A tier 1 manufacturer must be a home occupancy business with no more than one employee, and under $10,000 in gross revenue each year.

40. "Cannabis Manufacturing Establishment, Tier 2" shall mean an establishment licensed by the Vermont Cannabis Control Board and the Local Control Commission to manufacture cannabis products in accordance with 7 V.S.A Chapter 33 [or current state definition at time of application]. A tier 2 manufacturer may purchase, process, manufacture, transfer, and sell Cannabis as well as finished and in-process Cannabis Products to other Licensees but not directly to consumers. A tier 2 manufacturer may produce Cannabis Products using the following methods but may not utilize unapproved flammable solvent chemical extraction or flammable solvent chemical synthesis:

(a) Water-Based Extraction: extraction using only water, ice, or other freezing substrate or process as approved by the Board.

(b) Food-Based Extraction: extraction using propylene glycol, glycerin, butter, coconut or olive oil, other typical cooking fats, or alcohol as approved by the Board.

(3) Heat/Pressure-Based Extraction: extraction using heat and/or pressure as approved by the Board.

41. "Cannabis Manufacturing Establishment, Tier 3" shall mean an establishment licensed by the Vermont Cannabis Control Board and the Local Control Commission to manufacture cannabis products in accordance with 7 V.S.A Chapter 33 [or current state definition at time of application]. A tier 3 manufacturer may purchase, process, manufacture, transfer, and sell Cannabis as well as finished and in-process Cannabis Products to other Licensees but not directly to consumers. A tier 3 manufacturer may produce Cannabis Products using all lawful methods of extraction.

42. "Cannabis Testing Laboratory Establishment" shall mean an establishment licensed by the Vermont Cannabis Control Board and the Local Control Commission to test cannabis and cannabis products in accordance with 7 V.S.A Chapter 33 [or current state definition at time of application].

43. *"Capital Improvement"* shall mean any public facility or infrastructure including, but not limited to, streets, sewers, water mains, lights, traffic control devices, public buildings and other public facilities.

44. *"Capital Improvement, Off-site"* shall mean the construction or placement of public infrastructure including, but not limited to, streets, sewers, water mains, lights, traffic control devices and other public facilities which is determined necessary upon review of a development proposal.

45. *"Car wash, Incidental"* shall mean any facility whose principal business is the provision of other automobile services but provides one bay for the washing of vehicles, clearly incidental to the other automobile services provided.

46. *"Car wash,"* shall mean any facility whose principal business is the cleaning and washing of vehicles of any type, or a facility which provides two (2) or more bays for the washing of vehicles by the customer or for hire by the business.

47. *"Catering Services"* shall mean any facility which prepares food for delivery and consumption off the premises.

48. *"Cemetery"* shall mean a parcel of land used for the burial of the dead (for cemetery purposes), including columbaria, crematories, mausoleums, and mortuaries.

49. *"Change in Intensity of Use"* shall mean any change in the use of a structure or land that results in an increase or decrease in any standard established in Chapters 6 or 7 of this Code as applied to the subject use.

50. *"Church,"* or *"Place of Worship"* shall mean any premises used and operated as a non-profit operation principally as a place of worship and religious education.

51. *"Circus,"* or *"Carnival"* shall mean any temporary entertainment facility open to the general public with or without a fee which provides rides, shows, food booths, animal entertainment or other shows.

52. *"Clinic, Medical"* shall mean any facility which provides medical services by licensed professionals to individuals on an out-patient basis and which does not provide facilities for the care of patients on an overnight basis.

53. *"Clinic, Veterinary"* shall mean any facility which provides medical care to animals which may include facilities for keeping animals overnight as part of veterinary care. Facilities which provide for the overnight boarding or caring of animals which are not part of veterinary care are deemed to be animal boarding facilities.

54. *Commercial PUD"* shall mean a Planned Unit Development (PUD) located in the

Village Center, Highway Arterial, or Transit Oriented Development Districts.

55. *"Commercial Vehicle"* shall mean any vehicle designed (or modified) for business purposes for an individual or business; any vehicle which is used primarily to transport tools of a trade or supplies; any vehicle which has attached advertising materials.

56. *"Common Household Pet"* shall mean any domesticated animal commonly associated with and cared for in individual homes. Wild animals, livestock or other domesticated farm animals are not common household pets.

57. *"Common Improvements"* shall mean all streets, driveways, parking bays, or other vehicle use areas, and all uses, facilities, structures, buildings and other improvements or portions thereof, which are designed and provided for the common use, benefits and enjoyment of all residents or occupants of a development or portion thereof.

58. *"Common Ownership"* shall mean ownership of common open space or common improvements which grants at least some undivided and common rights in such lands or improvements to the residents or occupants of a development or a neighborhood, either directly or indirectly, through shares or other interests in the property.

59. *"Common Open Space"* shall mean all open space, or portions thereof, including landscaping, screening, and buffering, which is designated and provided for the common use, benefit and enjoyment of all residents or occupants of all or a designated portion of a development or neighborhood, or which is required as a buffer to protect adjacent property.

60. *"Comprehensive Plan"*, *"Village Plan", "City Plan"* or *"Plan"* shall mean the Essex Junction Comprehensive Plan for the City of Essex Junction as adopted pursuant to Title 24, Chapter 119, Section 4385 of Vermont Statutes and filed with the Town/City Clerk.

61. *"Conditional Use"* shall mean a use, as designated on the Use Chart, which may be appropriate at a particular location following specific standards of review and approval as specified in this Code.

62. *"Congregate Housing"* shall mean a facility containing two or more dwelling units for long term residence exclusively by persons 55 years or older, and their spouses, and which shall include, without limitation, common dining and social recreation features, special safety and convenience features designed for the needs of the elderly. Social services for the residents must include at least two of following: meal services, transportation, housekeeping, linen, and organized social activities.

63. *"Construction"* shall mean any earthmoving activity or grading activity; the erection, placement or assembly of any building or structure or additions thereto on any lot or parcel; the moving and placement of any building, structure or materials onto any lot or parcel.

64. *"Construction Service Establishment"* shall mean any facility which provides off-site services for the construction or building of any development and which stores construction materials or equipment used by business on the property.

65. *"Contiguous"* shall mean adjoining or separated by no more than a street, railroad, property line, brook, stream, easement or other feature.

66. *"Cul-de-sac"* shall mean a dead-end street designed to provide a vehicular turn-around at the end of the street.

67. *"Cultural Facility"* shall mean the use of land, buildings, or structures to provide educational and informational services to the general public, which shall include, but not be limited to, children's museums, schools, art galleries, libraries, or similar facilities.
68. *"Dark Sky Compliant"* shall mean hooded or shielded outdoor lighting fixtures that allows no light emission above a horizontal plane.
69. *"Day Care Facility"* shall mean a facility in which care is provided on a regular basis for nine (9) or more children under twelve (12) years of age, at one time. Such facilities include those commonly known as "day care center", "day nurseries", "play groups", and "preschool".
70. *"Day Care Home"* shall mean a home which provides care on a regular basis for eight (8) or fewer children at any time, excluding children of the owner.
71. *"Dead-end Street"* shall mean a street open at one end only without provision for a turnaround and which may be extended into adjoining property.
72. *"Density Bonus"* shall mean an increase in the number of residential units, lot size or the size of a non-residential structure specifically granted to a single development.
73. *"Design Storm"* shall mean the maximum storm expected to occur once during the interval specified in this Code.
74. *"Development"* shall mean the carrying out of any building activity, the making of any material change in the use or appearance of any structure or land, a change in the intensity or use of land, or the filling of land or the dividing of land into two or more parcels.
75. *"Development Standards"* shall mean the engineering, construction, and design standards, procedures and practices necessary for approval and review of development proposals.
76. *"Discharge, Storm Water"* shall mean any stormwater which leaves a site, enters another site and subsequently enters any artificial or natural drainage system or drainage way.
77. *"Domestic Vehicle"* shall mean an automobile or non-commercial vehicle designed and used for personal purposes.
78. *"Dormitory*" shall mean a building that is owned and/or operated by an educational institution whose primary purpose is to provide living accommodations for individuals associated with the institution.
79. *"Double Frontage Lot"* shall mean a lot with street frontage on two boundaries.
80. *"Drainage Facilities"* shall mean any drainage way or facility designed and constructed to control the surface flow of water and may include surface and sub-surface components.
81. *"Driveway"* shall mean the portion of a lot and right of way used for vehicular access between an abutting street and a vehicular parking area. A driveway serving multiple units on one lot shall not be considered a private drive or private street.
82. *"Dry Cleaner"* shall mean an establishment which provides laundry, dyeing or dry cleaning services to individual customers. Drop-off facilities for cleaning off-the-premises shall be deemed "personal service establishments".
83. *"Dumpster"* shall mean an enclosed container or a container with a lid used to

temporarily store waste. A container below 130 gallons in capacity shall not be deemed a dumpster.

84. *"Dwelling, Mobile Home or Manufactured Home"* shall mean a dwelling unit constructed off site on a chassis or frame and moved or placed on a lot and connected to utilities.

85. *"Dwelling, Multi-Family"* shall mean a building or structure designed to contain five (5) or more dwelling units.

86. *"Dwelling, Single-Family"* shall mean a building or structure designed to contain no more than one dwelling unit.

87. *"Dwelling, Two-Family or Duplex"* shall mean a building or structure designed to contain no more than two dwelling units.

88. *"Dwelling, Three-Family or Triplex"* shall mean a building or structure designed to contain no more than three dwelling units.

89. *"Dwelling, Four-Family or Fourplex"* shall mean a building or structure designed to contain no more than four dwelling units.

90. *"Dwelling Unit"* shall mean a dwelling structure, or portion thereof, designed, constructed or used as living quarters for one family, and which includes facilities for food preparation, sleeping and sanitation.

91. *"Easement"* shall mean a grant by a property owner of one or more of the rights associated with the property for use by the public, a corporation or another person or entity. Easements shall not be subtracted from the total lot area.

92. *"Eating and Drinking Establishment"* shall mean any establishment which provides, for compensation, food or drinks primarily for consumption on the premises. This term does not include establishments which provide drive-through facilities or whose primary business is the preparation of food to be consumed off the premises.

93. *"Eating Establishment, Drive-Through"* shall mean any facility which provides one or more windows which allow patrons to buy and pick up food from their vehicle for consumption off premises.

94. *"Emergency Shelter"* shall mean any building, structure, residence or place for the temporary housing or care of individuals or families (including limited counseling) for a period not to exceed thirty (30) days. This term shall not be deemed to include day care facilities, day care homes, family care homes, family care facilities, nursing, rest or convalescent homes, halfway houses or similar facilities.

95. *"Existing"* shall mean in existence on or before the effective date of this Code.

96. *"Family"* shall mean one or more persons occupying a dwelling and living as a single housekeeping unit, whereby the persons living in the same dwelling share responsibilities for maintaining a joint living arrangement. This is distinguished from a group occupying a boarding house, lodging house, club, fraternity, or hotel where persons living in the same dwelling share no joint household responsibilities. For the purposes of this Code, "Family" may include a group of unrelated persons living as a single housekeeping unit or foster children living with one or more unrelated persons.

97. *"Family Care Facility"* shall mean a facility in which care is provided on a regular basis for nine (9) or more adults, including limited counseling and medical care, and commonly known as group care facilities, hospices, half-way houses, and similar

facilities.

98. *"Family Care Home"* shall mean a home which provides for care on a regular basis, for eight (8) or fewer adults at any time, excluding residents of the dwelling.

99. *"Fence"* shall mean a freestanding structure of metal, masonry, stone, wood or any combination, which is attached to the ground and used for confinement, screening, or partitioning purposes.

100. *"Fill"* or *"Filling"* shall mean the placement of material or soil on any property in any manner which increases or alters the flow of stormwater on any adjacent lot. Soil preparation for gardening purposes shall not be deemed "fill".

101. *"Flea Market"* shall mean any premises where the principal use is the sale of new and used household goods, personal effects, tools, art work, handicrafts, and small appliances or equipment in small quantities on a temporary or limited basis. Spaces or booths may be rented or leased to individuals for the sale of products.

102. *"Floor Area"* shall mean the square footage of the horizontal floor area within any building or structure measured from the interior walls.

103. *"Food truck" shall mean a licensed, motorized vehicle or mobile food unit, including a trailer or converted recreational vehicle, equipped to refrigerate and/or cook food where, on a temporary basis, such food items are sold to the general public or to individuals attending a special event.*

104. *"Footprint Lot"* shall mean a lot created through the permit process that is generally designed to be contemporaneous with the footprint of a building or a portion of a building. Notwithstanding Section 201.C, a footprint lot is a form of ownership and conveyance but shall not be recognized for the purposes of zoning such as but not limited to lot coverage maximums, setbacks, and frontage and shall not be reviewed pursuant to the subdivision regulations.

105. *"Formula-Based Restaurant"* shall mean a restaurant that is required by contractual or other arrangement to offer any of the following: standardized menu, employee uniforms, interior and/or exterior color schemes, architectural design, signage or similar standardized features, or which adopts a name or food presentation format that causes it to be substantially identical to another restaurant regardless of ownership or location.

106. *"Formula-Based Retail"* shall mean a retail use that is required by contractual or other arrangement to offer any of the following: standardized inventory, employee uniforms, interior and/or exterior color schemes, architectural design, signage or similar standardized features, or which adopts a name or product presentation format that causes it to be substantially identical to another store regardless of ownership or location.

107. *"Freight Rail Distribution Center"* shall mean a facility or a group of facilities that perform consolidation, warehousing, packaging, decomposition and other functions linked with handling freight. Their main purpose is to provide value-added services to freight. They can also perform light manufacturing activities such as assembly and labeling. They can accommodate warehouses designed to store goods for longer periods of time.

108. *"Frontage"* shall mean the length of the front lot line for a single parcel of land

which runs contiguous to and parallel with public right-of-way or private street or easement which it borders.

109. *"Funeral Home"* shall mean any building or structure, or part thereof used for human funeral services which may include a chapel or facility to be used for funeral services. A funeral home and funeral home services shall not include cremation services.

110. *"Gas Pump"* shall mean any device used for the sale of fuel where no service or repair activity is provided. The sale of fuel may be secondary or incidental to the sale of other goods or products.

111. *"Group Housing"* shall mean any premises where the principal use is the housing of two or more individuals not living as a single housekeeping unit and which does not have individual cooking and eating facilities or separate apartments. This term shall be deemed to specifically include sororities, fraternities, retreat houses, camps, convents or similar uses but does not include hotels, family care facilities, family care homes or boarding houses.

112. *"Ghost Kitchen"* shall mean a food service business that serves customers exclusively by delivery and pick-up based on phone and online ordering.

113. *"Hard Surfaced"* shall mean surfaced with asphalt, concrete, paving stones or similar material.

114. *"Historic Property,"* or *"Historic Resource"* shall mean any property, building, structure, or place identified as having local, state or national historic significance.

115. *"Home Occupation"* shall mean any activity undertaken or intended for financial gain by the occupants of any dwelling unit.

116. *"Home Owners Association"* shall mean a formally constituted nonprofit association or corporation made up of the property owners and/or residents of fixed place and responsible for the costs and upkeep of common facilities.

117. *"Hotel, Motel"* shall mean a facility designed and constructed to provide sleeping facilities for travelers for a fee and for limited periods of time. Common terms include inn, motor inn, motor lodge, tourist cabin, and tourist court. A hotel may have limited cooking facilities in individual rooms provided, however, no more than fifteen (15) percent of all the units may provide cooking facilities.

118. *"Hotel, Motel – Extended Stay"* shall mean a facility that contains six or more guest rooms intended or designed to be used, or which are used, rented, or hired out to be occupied or which are occupied for sleeping purposes for guests and contain kitchen facilities for food preparation including but not limited to such facilities as refrigerators, stoves, and ovens. Guests primarily stay for periods of one week or more. Extended stay hotels/motels shall not be occupied by children in the local school system. Extended stay hotels/motels shall not be used as permanent residences.

119. *"Impervious area, surface, or cover"* shall mean developed areas of land that prevent or significantly impede the infiltration of stormwater into the soil. Typical impervious surfaces include, but are not limited to roofs, sidewalks, walkways, private driveways, parking lots, access extensions, alleys, and other paved, engineered, compacted, or gravel surfaces.

120. *"Incinerator"* shall mean any facility designed to be used for the disposal by

combustion of products or materials.

121. *"Infrastructure"* shall mean road, water, sewer, storm water, streetlights, drainage systems or similar facilities.

122. *"Junk Vehicle"* shall mean any vehicle, trailer, semi-trailer or other motorized conveyance which, for a period exceeding thirty (30) days is inoperable or in a condition that would not be allowed to operate upon public roads in its present condition under the law of the State of Vermont. Vehicles which are used for salvage or parts are specifically deemed to be junk vehicles. Vehicles that are being repaired or restored shall be excluded if the owner demonstrates that efforts to bring the vehicle to an operable condition have been made and will be completed within thirty (30) days. The restoration or repair of one antique vehicle, owned by the resident, and repaired or restored within an enclosed structure, shall not be deemed a junk vehicle.

123. *"Junk Yard"* shall mean any place which is maintained, operated or used in connection with a business for storing, keeping or processing, buying or selling junk for processing or use on or off the premises. Also included is any facility designed or used for the storage or sale of unlicensed vehicles or parts from vehicles. This does not include a garage or service station where wrecked or damaged vehicles are stored for less than thirty (30) days, or a recycling or waste collection center approved under provisions of this Code, or new or used car sales establishments where vehicles for sale are unlicensed.

124. *"Landfill Collection Site"* shall mean any premises, facility, structure, or building designed and utilized for the temporary storage or sorting of materials for later removal to a landfill or recycling center.

125. *"Landscape Service"* shall mean any establishment which provides maintenance, planting, sodding, seeding, trimming or other care to any plant off-premises. The production and storage of plant materials on the premises for pick-up and delivery is also deemed a landscape service.

126. *"Livestock or Other Domesticated Farm Animals"* shall mean animals typically associated with farm or agricultural practices. Livestock or domesticated animals shall include but not limited to the following: bison, chickens, cows, ducks, geese, goats, horses, ostrich, llamas, sheep, swine, etc.

127. *"Lot"* shall mean a definable parcel of land occupied or capable of being occupied by one or more structures or uses as regulated and approved by this Code.

128. *"Lot Area"* shall mean the area within the property lines of a lot, calculated from dimensions of the boundary lines of the lot, exclusive of any portion of the lot that is within a public or private street.

129. *"Lot Consolidation"* shall mean a procedure used to combine two or more lots into a single lot.

130. *"Lot, Corner"* shall mean a lot abutting two (2) or more intersecting public or private streets.

131. *"Lot Coverage"* shall mean that portion of the area (square footage) which is covered by buildings, structures, decks, swimming pools, all parking areas, impervious sidewalks, impervious driveways and other impervious surfaces. Pervious driveways designed and maintained to infiltrate the 1-year/24-hour storm event on site shall not

be considered as lot coverage.

132. *"Lot Depth"* shall mean the distance between the front and rear lot lines.

133. *"Lot Line"* shall mean the boundary which separates the lot from adjoining lots or streets.

134. *"Lot Line, Front"* shall mean a lot line which separates the lot from a public or private street or approved easement.

135. *"Lot Line, Side"* shall mean a lot line which separates a lot from adjoining properties.

136. *"Lot Line, Rear"* shall mean the lot line intersecting a front lot line that is most distant from and most closely parallel to the front lot line. A lot bounded by only three lot lines will not have a rear lot line.

137. *"Lot, Reverse Frontage"* shall mean any lot, intentionally designed so that the front lot line faces a local street rather than facing a parallel major street and which provides no access to the major street.

138. *"Lot Width"* shall mean the horizontal distance between the side lot lines of a lot measured along a straight line, parallel to the front line at the minimum required building setback line.

139. *"Mail Services"* shall mean any establishment which engages in the distribution of mail or parcels.

140. *"Manufacturing, Heavy"* shall mean any land use where a principal activity is the assembly or creation of products from raw materials. Specifically included are asphalt batch plants, commercial incinerators (not accessory to a permitted use), oil, gas or coal fired facilities used to process raw products, and other similar uses which potentially generate water or air-borne pollutants.

141. *"Manufacturing, Light"* shall mean any business where the principal use is the assembly of materials or parts to be used in the manufacture or assembly of consumer products including small appliances, electronics, computers, and other products. Research and development of new products, or improvements to existing products is permitted.

142. *"Massage Therapy"* shall mean the scientific manipulation of the soft tissues of the body for the purpose of normalizing those tissues and consists of manual techniques that include applying fixed or moveable pressure, holding, and/or causing movement of, or to, the body to enhance health and healing when undertaken by a Massage Therapist that is certified or registered through the National Certification Board for Therapeutic Massage and Bodywork's certification program, or an approved alternative certification body, for example AMA-VT.

143. *"Material Change in Use"* shall mean a change from:

(a) One type of use identified in the Use Chart set forth in Section 622 to another type of use set forth in such table or a use not set forth in such table; or

(b) A type of use not set forth in the Use Chart at Section 622 to a type of use set forth in such table; or

(c) A type of use not set forth in the Use Chart at Section 622 to another type of use not set forth in such table.

144. *"Medical and Dental Lab"* shall mean any establishment whose principal business is the processing, testing, or analysis of materials for medical purposes and which provides limited direct client service. Clients or patients shall not be examined or treated on the premises.

145. *"Mini Warehouse"* shall mean a storage facility designed and constructed for rent of individual storage spaces to customers where each rented or leased space has an individual door or gate. The storage or lease of spaces for commercial storage shall be deemed a warehouse.

146. *"Motor Vehicle Maintenance Service"* shall mean a facility which provides vehicle maintenance, including oil changes and lubrication, tire sales and replacement, and minimal work while the customer is on the premises. Sale of gasoline, oil, tires or parts for use off premises is not permitted.

147. *"Motor Vehicle Repair Services"* or *"Service Station"* shall mean any facility which provides repair service to individual vehicles including the installation of new or used parts. Repair and installation includes engine repair, transmission repair, body repair, and the installation or replacement of any mechanical parts. Car washing, maintenance services, tire installation and sale of parts may be an incidental or accessory use. The sale of gasoline may be permitted

148. *"New Unit"* shall mean a dwelling unit approved and constructed pursuant to the Land Development Code without credit or consideration for whether it replaces any pre-existing dwelling unit. With respect to any section of this Code, there shall be no credit or reduction of any kind for an existing dwelling unit that is replaced by a new unit.

149. *"Nursing, Rest, or Convalescent Home"* shall mean an institution other than a hospital for the care of children, the aged, the infirm, or those suffering long-term bodily ailments and whose residents require on-going professional care and assistance.

150. *"Occupancy"* shall mean the use of any structure, premises, or portion thereof which is leased, rented, or owned, for any conditional, permitted, or non-conforming use.

151. *"Office"* shall mean any building, structure, room, suite or portion thereof where the occupant transacts business or carries on a stated occupation. An office shall not include the manufacture, assembly, cleaning, testing, processing, or repair of any product.

152. *"Office, Home"* shall mean any business use of a room, or portion thereof, within a dwelling, which meets the home occupation standards.

153. *"Office, Incidental"* shall mean any suite, room or occupancy within a building used for the purposes of meeting customers or processing paperwork for the permitted business.

154. *"Office, Professional"* shall mean any building or structure where the principal use is the conduct of business by professionals such as engineers, architects, planners, land surveyors, artists, attorneys, accountants, insurance agents, real estate brokers, and limited dental and medical services. Facilities which provide overnight care to any customer shall not be deemed a professional office.

155. *"Off-Site Improvements"* shall mean improvements to public infrastructure required as a condition of approval of a development which created the need for the

improvements.

156. *"Open Space"* shall mean that area within the boundaries of any lot or development that is intended to provide light and air and upon which no improvement which creates impervious surfaces may be installed, erected, or constructed. Open space shall in general be available for entry and use by the occupants of the lot. Ordinarily, open space shall be maintained with vegetative cover.

157. *"Ownership"* or *"Owner of Record"* shall mean the individual, group, or corporation with legal title to the land or with a contract to obtain legal title, or an individual, group, or corporation given specific ownership rights by a lease.

158. *"Parcel"* shall mean a lot or tract of land.

159. *"Parking Area"* shall mean any area outside of any street right-of-way or easement specifically allocated and designed to accommodate the parking or storage of domestic vehicles.

160. *"Parking, Commercial"* shall mean the use of land or structures as a principal use for the parking of vehicles for a fee.

161. *"Parking Space"* shall mean a striped or signed space designed to accommodate one vehicle. Spaces may be marked for handicapped vehicles, small cars, recreational vehicles, or other type of motorized vehicle.

162. *"Personal Service Establishment"* shall mean a facility which provides care to a person or a person's apparel, barber shops, beauty shops, seamstress shops, shoe repair shops, coin-operated laundries, optician shops, diet centers, health clubs, spas, pet grooming shops and similar uses. Sales of products must be clearly incidental to the services provided.

163. *"Planned Unit Development" or "PUD"* shall mean one or more parcels of land to be developed as a single entity, the plan for which may propose any authorized combination of density or intensity transfers or increases, as well as the mixing of land uses in non-residential Districts. This plan, as authorized, may deviate from bylaw requirements that are otherwise applicable to the area in which it is located with respect to the area, density or dimensional requirements or allowable number of structures and uses per lot as established in any one or more districts created under the provisions of these regulations. The specific requirements of a PUD and the area, density and dimensional provisions that may be modified are further defined in each district in which PUDs are allowed.

164. *"Planning Commission"* or *"Commission"* shall mean the Planning Commission created under provisions of Title 24, Chapter 117 of Vermont Statues appointed by the City Council with the responsibilities as specified by Vermont Statutes, the Village Charter and the provisions of this Code. As of July 1, 2022 the Planning Commission no longer has a development review function in Essex Junction.

165. *"Pollution"* shall mean the presence in the air, water, or soils of any substance, contaminants or noise which may be harmful or hazardous to human health or welfare or animal and plant life or property as defined by Federal and State law.

166. *"Principal Building"* shall mean a building or structure in which is conducted the main or principal use of the lot or parcel upon which said building is located.

167. *"Principal Use"* shall mean the main use which is conducted on a lot or parcel or

within a building or structure located on the lot or parcel.

168. *"Private Community Use"* shall mean any structure used, owned or operated by a profit or non-profit organization for the sole benefit of its membership. Food and beverages may be provided on the premises if the facility is so designed and constructed. Membership may be recreational or social.

169. *"Private Street"* shall mean any street which has not been accepted as a public street.

170. *"Private Yard"* (condo, townhouse, etc.) shall mean any yard fenced, screened or walled to provide private space on the lot for the owners or occupants of a dwelling of any type.

171. *"Public"* shall mean any use, land, structure, building, infrastructure, or facility used by any state or local governmental entity for use or owned by the general public.

172. *"Public Hearing"* shall mean any duly noticed hearing on an application or use as specified by this Code.

173. *"Public Meeting"* shall mean any duly noticed meeting at which a quorum (a majority) is present to conduct business.

174. *"Public Street"* shall mean a street owned by the municipality.

175. *"Public Works Standards"* shall mean the construction and installation standards adopted herein for infrastructure or connection to or use of existing public infrastructure.

176. *"Recreation Use, High Intensity"* shall mean any public, quasi-public or private property where the principal use is a zoo, aquarium, amusement park, stadium, drive-in facility, golf course, exposition center, or similar use or activity.

177. *"Recreation Use, Low Intensity"* shall mean any public, quasi-public or private facility where the principal use is for active or passive recreation in a park, playground, athletic field, tennis court, bike path, or similar facility for indoor and outdoor activities. Indoor recreation structures may have accessory uses or structures such as snack bars, locker rooms, and pro shops that are designed and intended for use by the patrons of the primary use. A private club house restricted to use by development residents may be a low intensity recreation use.

178. *"Recreation Use, Medium Intensity"* shall mean any recreation facility or use such as billiards, bowling, miniature golf course, in-door shooting range, arcade, pool halls, theaters and similar facilities.

179. *"Recreation Use, Temporary"* shall mean any recreation use which is established on a temporary basis including circuses, carnivals, booths, festivals, and similar uses.

180. *"Recreational Vehicle"* shall mean any vehicle built and used primarily for recreation purposes (including boats) and designed to be pulled behind another vehicle or any motorized vehicle which accommodates sleeping and/or eating. Common terms include camper, topper, trailer, motor home, and RV.

181. *"Recreational Vehicle Site"* shall mean any parcel or portion thereof designed and constructed to accommodate the parking of one or more recreational vehicles for a fee.

182. *"Recycling Center"* shall mean a facility designated for the delivery and pick-up of recyclable materials.

183. *"Redevelopment"* shall mean the alteration, conversion, reconstruction, structural alteration or enlargement of any site or structure or the change in any use.
184. *"Repair Service Establishment"* shall mean a business in an enclosed structure whose principal use is the repair and replacement of common household items such as appliances, watches, musical instruments, computers, bicycles, radios, televisions, refrigerators, air conditioners and similar uses. Product sales shall be incidental to the repair business.
185. *"Residential Development"* shall mean any subdivision, apartment, cluster home, carriage home, condominium, or townhouse designed and constructed for residential occupancy.
186. *"Re-Subdivision"* shall mean the creation of a new subdivision whose boundaries or lot lines have changed from a previously approved subdivision and excluding "lot division", "lot consolidation" or "boundary adjustment".
187. *"Retail, Convenience"* shall mean an establishment whose principal use is the sale of products in small quantities for the daily use of customers including but not limited to bakeries, food stores, newsstands, tobacco shops, card shops, liquor stores, delicatessens, musical supply stores, pet stores, jewelry stores, camera and photography supplies, ice cream parlors, meat and seafood shops, and florist shops.
188. *"Retail, Sales,"* shall mean an establishment whose principal use is the sale of products for consumption or use by the customer off the premises. This shall include but not be limited to hardware, department, paint, office equipment, sporting goods, trading stamp and redemption outlets, television (including satellite dishes), automotive supply and major household appliance stores (including refrigerators, stoves, ovens, air conditioners, furnaces).
189. *"Right-of-way"* shall mean any parcel of land deeded or for which an easement is granted for the current or future construction of a public or private street or infrastructure. A right of way shall be subtracted from the total lot area.
190. *"Roadside Sale of Agricultural Products"* shall mean the use of any lot or portion thereof for the display or sale of locally grown or produced agricultural products on a temporary or seasonal basis.
191. *"Sales, Outdoor"* shall mean the use of any lot or parcel or portion thereof for the sale and storage of any product or the exchange or swapping of any product among customers.
192. *"Sales, Temporary"* shall mean the use of any structure, lot or parcel for limited sales events which are conducted on private or public property for brief periods of time.
193. *"Salvage"* shall mean the recovery of any product from the waste stream with intent to recycle or sell for any purpose.
194. *"School"* shall mean any establishment certified by the Vermont Department of Education, including parochial, private, public and nursery schools, colleges, universities and accessory uses, but specifically excluding commercially operated schools of beauty, culture, business, dancing, driving, music and other similar establishments.
195. *"Service Bay"* shall mean a space designed and constructed for the placement of any motor vehicle for repair, servicing, or washing. Service bays may be located outside of structures.

196. *"Service Station" See "Motor Vehicle Repair Services"*.
197. *"Setback"* shall mean the required minimum horizontal distance from the property line to the nearest point of a structure.
198. *"Sewer Allocation"* shall mean the granting of specific rights to discharge sewage into a sewer for treatment at the City's Waste Water Treatment Plant.
199. *"Shopping Center"* shall mean a structure or series of structures which contain a variety of commercial outlets for purchasing goods and services.
200. *"Site Plan"* shall mean a plan, prepared to scale, showing accurately and with complete dimensions, the boundaries of a site and the location of all buildings, structures, uses, and principal site development features proposed for a specific parcel of land.
201. *"Small Scale Facility"* shall mean any Wireless Telecommunication Facility that is installed on the ground and does not exceed 20 feet in elevation and/ or that is installed on an existing building or structure and does not extend more than 20 feet from the building or structure.
202. *"Solar Collector" "Solar Receptor"* shall mean a device designed and used for collecting solar energy and converting it to heat or electrical energy.
203. *"Solid Waste Collection Point"* shall mean an area or facility designated for the temporary collection and transfer of waste to an approved landfill.
204. *"Stable, Public"* shall mean any boarding and grooming facility for horses or other livestock with stalls for rent to the general public. A stable may include riding facilities and trails.
205. *"Staff"* shall mean any City employee or other personnel retained on a contractual basis to whom is delegated the authority to take specific actions as provided herein.
206. *"Storage, Outdoor"* shall mean any facility whose principal use is the storage of products, equipment, recreation vehicles or supplies and which does not include storage of vehicles for sale to the general public.
207. *"Stormwater Retention Facility"* shall mean any facility designed and constructed to hold and/or treat stormwater runoff.
208. *"Stormwater Runoff"* shall mean water from precipitation and materials dissolved or suspended in it which is not absorbed into the soil, does not evaporate and which runs across the land during periods of precipitation.
209. *"Story"* shall mean a portion of a building between an upper surface of a floor and the upper surface of the floor above, or if there is no floor above it, the space between such floor and ceiling above it. A basement shall be considered as a story when the distance from grade to the finished surface of the floor above the basement is more than six (6) feet for more than 50 percent of the perimeter or more than twelve (12) feet at any point.
210. *"Street"* shall mean any public or private way designed for use by motorized and non-motorized vehicles and pedestrians; and providing access to adjoining lots.
211. *"Structure"* shall mean the assembly or placement of any materials for occupancy or use including, but not limited to, a building, mobile home or trailer, billboard, sign, wall or fence (except a wall or fence on an operating farm and fences

less than six (6) feet in height) and tanks for storage of gas and/or oil consistent with Section 4303 of Title 24, Chapter 117 of Vermont Statutes Annotated.

212. *"Subdivision"* shall mean any land, vacant or improved, which is divided or proposed to be divided into two (2) or more lots, parcels, sites, plots, units or interests for the purpose of offer for sale, lease or development.

213. *"Substantial Improvement"* shall mean any repair, reconstruction or improvement of a structure, the cost of which equals or exceeds fifty (50) percent of the market value of the structure either (a) before the improvement or repair is started (b) if the structure has been damaged and is being restored, the value of the structure before the damage occurred. The term does not, however, include (1) any improvement to comply with existing State or local health, safety or sanitary code specifications which are solely necessary to assure safe living conditions or (2) any alteration of a structure listed on the National Register of Historic Places or a State Inventory of Historic Places

214. *"Taxi-cab and Limousine Service"* shall mean a parcel, building or space designated for use by any company providing transportation for a fee. Incidental office space, structures designed for the storage of vehicles and the outdoor storage of vehicles not currently in service may be included.

215. *"Temporary Permit, Champlain Valley Exposition"* shall mean any permit authorized herein and issued for specific events at the Champlain Valley Exposition Fairgrounds.

216. *"Temporary Structure":* any structure in place fewer than six months in any 12 month period shall be considered a temporary structure.

217. *"Temporary Use"* shall mean an identified use permitted on an occasional basis for a specific length of time.

218. *"Temporary Use Permit"* shall mean a permit authorizing the establishment of a specific temporary use.

219. *"Traffic Impact Study"* shall mean a study, which analyzes the traffic generated by a specific development proposal and describes the impact of the traffic generated on adjacent streets, intersections and driveways. A traffic impact study may also include a study of impact on streets or intersections not immediately adjacent to the proposed development.

220. *"Transfer of Development Rights"* shall mean a process by which the right to develop one portion of a parcel of land (sending area) is transferred to another portion of the same parcel (receiving area). The right to develop the sending area of land is eliminated.

221. *"Trustees"* or *"Board of Trustees"* shall mean the legislative body of the Village of Essex Junction elected pursuant to the provisions of the Village Charter. As of July 1, 2022, the Board of Trustees no longer exists in Essex Junction. Where these terms still exist in the Land Development Code, it shall mean the City Council.

222. *"Utility Uses, Utilities"* shall mean any public regulated company or governmental entity which provides specific public services including electricity, natural gas, telephone, cable television, water, sewer, storm sewer and similar facilities.

223. *"Variance"* shall mean a procedure by which a waiver of Code requirements may

be obtained from the Development Review Board when the strict application of the Code to a specific parcel will cause undue hardship.

224. *"Vehicle Sales"* shall mean the sale of cars, sport utility vehicles and light trucks.

225. *"Visibility Triangle"* shall mean a designated area located adjacent to the intersection of two or more streets or driveways which shall be kept free from visual obstruction.

226. "*Warehouse"* shall mean a facility where the principal use is the storage of merchandise, products, or materials for a fee or for distribution or sale to other businesses. Storage of materials incidental to a permitted use is not a warehouse.

227. *"Wild Animals"* shall mean any non domesticated animals.

228. *"Wireless Telecommunication Facility"* shall mean any tower or other support structure, including antennae, that will extend 20 or more feet vertically, and any accompanying structure, building, access road, service utility or equipment that broadcasts or receives radio frequency waves carrying Wireless Telecommunication Services.

229. *"Wireless Telecommunication Service"* shall mean any commercial mobile service, wireless service, common carrier wireless exchange service, cellular service, personal communication service (PCS), specialized mobile radio service, paging service, wireless data service, or public or private radio dispatch service.

230. *"Wireless Telecommunication Service Provider"* shall mean any person or entity providing Wireless Telecommunication Services.

231. *"Yard"* shall mean the required open space area located on the same lot with a building or structure, unoccupied and unobstructed from the ground up. The minimum depth or width of a yard shall be the horizontal distance between the lot line and the nearest point of the structure.

232. *"Yard, Special"* shall mean the required front, side or rear lot area normally required for setbacks which, due to unusual lot configurations, cannot meet the standard side, front, or rear yard definitions.

233. *"Zero Lot Line"* shall mean a piece of real estate in which the structure comes up to, or very near to the edge of the property line.

234. *"Zoning Board of Adjustment," "Zoning Board," "Board of Adjustment,"* or *"Board"* shall mean the Board as appointed by the City Council which has the specific authority to act on variances, conditional uses, and Code interpretations as specifically delegated by this Code and provisions of the State of Vermont Statutes. As of July 1, 2022, the Zoning Board of Adjustment no longer exists in Essex Junction. Where these terms still exist in the Land Development Code, it shall mean Development Review Board or Zoning Administrator as applicable.

D. Transit Oriented Development.

For the purposes of Section 608 of this Code, the following definitions shall apply:

1. "*Affordable Housing"* shall mean housing, either rental or for sale, that is affordable to households earning eighty (80) percent of the median income for the Burlington Metropolitan Statistical Area (MSA) as established by the US Census Bureau and for which they pay no more than thirty (30) percent of their gross income for

housing, which includes utilities for rental properties.

2. "*Alley*" shall mean a vehicular driveway located to the rear of lots providing access to service areas and parking, and containing utility easements. Alleys should be paved from building face to building face, with drainage by inverted crown at the center or with roll curbs at the edges.

3. "*Block*" shall mean an aggregate of private lots, passages, rear lanes and alleys, circumscribed by thoroughfares.

4. "*Façade*" shall mean the exterior wall of a building that is set along a frontage line.

5. "*Frontage Line*" shall mean lot lines that coincide with a public frontage. Facades along frontage lines define the public realm and are therefore more regulated than the elevations that coincide with other lot lines.

6. "*Liner Building*" shall mean a building specifically designed to mask a parking lot or a parking garage from a frontage.

7. "*Parking Structure*" shall mean a building containing two or more stories of parking. Parking structures shall have liner buildings for the full height of the parking structure.

8. "*Pedestrian Oriented Design*" shall mean the design of community neighborhoods, streetscapes, sites, and buildings that emphasizes pedestrian access, comfort, and visual interest. Transit-Oriented Design that includes design and intensity of land use to support transit in addition to pedestrians.

9. "*Plaza*" shall mean a public open space at ground level wholly or partly enclosed by a building or buildings. It is continuously accessible to the public and has openings to the sky.

10. "*Rowhouse*" shall mean a single-family dwelling that shares a party wall with another of the same type and occupies the full frontage line.

11. "*Square*" shall mean an open space available for unstructured recreation and civic purposes. A square is spatially defined by building frontages. Its landscape shall consist of paths, lawns and trees, formally disposed. Squares shall be located at the intersection of important thoroughfares. The minimum size shall be 1 acre and the maximum shall be 5 acres.

12. "*Streetscape*" shall mean the urban element that establishes the major part of the public realm. The streetscape is composed of thoroughfares (travel lanes for vehicles and bicycles, parking lanes for cars, and sidewalks or paths for pedestrians) as well as the visible private frontages (building facades and elevations, porches, yards, fences, awnings, etc.) and the amenities of the public frontages (street trees and plantings, benches, streetlights, etc.).

13. "*Transit Oriented Development*" shall mean a development pattern characterized by a mix of uses surrounding a transit platform where streets have a high level of connectivity, blocks are small, and streetscape, buildings, and uses cater to the pedestrian.

14. "*Transit Park and Ride*" shall mean a facility designed for the temporary parking of automobiles, the occupants of which transfer to public transit or other automobiles to continue their trips.

E. Flood Plain Management Definitions.

For the purposes of Section 614 of this Code, the following definitions shall apply:

1. *"Base Flood"* shall mean the flood having a one percent chance of being equaled or exceeded in any given year.

2. *"Base Flood Elevation (BFE)"* shall mean the height of the base flood, usually in feet, in relation to the National Geodetic Vertical Datum of 1929, the North American Vertical Datum of 1988, or other datum referenced in the Flood Insurance Study report, or average depth of the base flood, usually in feet, above the ground surface.

3. *"Basement"* shall mean any area of the building having its floor elevation subgrade (below ground level) on all sides.

4. *"Existing Manufactured Home Park or Subdivision"* shall mean a manufactured home park or subdivision for which the construction of facilities for servicing the lots on which the manufactured homes are to be affixed (including, at a minimum, the installation of utilities, the construction of streets, and either final site grading or the pouring of concrete pads) is completed before the effective date of the floodplain management regulations
adopted by a community.

5. *"Expansion to an Existing Manufactured Home Park or Subdivision"* shall mean the preparation of additional sites by the construction of facilities for servicing the lots on
which the manufacturing homes are to be affixed (including the installation of utilities, the construction of streets, and either final site grading or the pouring of concrete pads).

6. *"FEMA*- Shall mean Federal Emergency Management Agency.

7. *"Flood"* shall mean either:

   (a) A general and temporary condition of partial or complete inundation of normally dry land areas from: the overflow of inland or tidal waters; the unusual and rapid accumulation or runoff of surface waters from any source; and mudslides which are proximately caused by flooding and are akin to a river of liquid and flowing mud on the surfaces of normally dry land areas, as when earth is carried by a current of water and deposited along the path of the current; or

   (b) The collapse or subsidence of land along the shore of a lake or other body of water as a result of erosion or undermining caused by waves or currents of water exceeding anticipated cyclical levels or suddenly caused by an unusually high water level in a natural body of water, accompanied by a severe storm, or by an unanticipated force of nature, such as flash flood or abnormal tidal surge, or by some similarly unusual and unforeseeable event which results in flooding.

8. *"Flood Insurance Rate Map (FIRM)"* shall mean an official map of a community, on which the Federal Insurance Administrator has delineated both the special hazard areas and the risk premium zones applicable to the community.

9. *"Flood Insurance Study"* shall mean an examination, evaluation and determination of flood hazards and, if appropriate, corresponding water surface elevations or an examination, evaluation and determination of mudslide (i.e., mudflow) and /or flood related erosion hazards.

10. *"Floodplain or Flood-Prone Area"* shall mean any land area susceptible to being inundated by water from any source (see definition of "flood").

11. *"Flood Proofing"* shall mean any combination of structural and non-structural additions, changes, or adjustments to structures, which reduce or eliminate flood damage to real estate or improved real property, water and sanitary facilities, structures and their contents.

12. *"Floodway"* shall mean the channel of a river or other watercourse and the adjacent land areas that must be reserved in order to discharge the base flood without cumulatively increasing the water surface elevation more than one foot at any point.

13. *"Historic Structure"* shall mean any structure that is:

(a) Listed individually in the National Register of Historic Places (a listing maintained by the Department of the Interior) or preliminarily determined by the Secretary of the Interior as meeting the requirements for individual listing on the National Register; or

(b) Certified or preliminarily determined by the Secretary of the Interior as contributing to the historical significance of a registered historic district or a district preliminarily determined by the Secretary to qualify as a registered historic district; or

(c) Individually listed on a state inventory of historic places in states with historic preservation programs which have been approved by the Secretary of the Interior; or

(d) Individually listed on a local inventory of historic places in communities with historic preservation programs that have been certified either:

(i) By an approved state program as determined by the Secretary of the Interior; or

(ii) Directly by the Secretary of the Interior in states without approved programs.

14. *"Legislative Body"* shall mean the selectboard in the case of a town, the trustees in the case of an incorporated village, and the mayor, alderpersons, and city council members in the case of a city, and the supervisor in the case of an unorganized town or gore.

15. *"Lowest Floor"* shall mean the lowest floor of the lowest enclosed area, including basement. An unfinished or flood resistant enclosure, usable solely for parking of vehicles, building access or storage in an area other than a basement area is not considered a building's lowest floor; provided, that such enclosure is not built so as to render the structure in violation of the applicable non-elevation design requirements of 44 CFR 60.3.

16. *"Manufactured Home"* shall mean a structure, transportable in one or more sections, which is built on a permanent chassis and is designed for use with or without a permanent foundation when attached to the required utilities. The term "manufactured home" does not include a "recreational vehicle".

17. *"Manufactured Home Park or Subdivision"* shall mean a parcel (or contiguous parcels) of land divided into two or more manufactured home lots for rent or sale.

18. *"New Construction"* shall mean, for the purposes of determining insurance rates,

structures for which the "start of construction" commenced on or after the effective date of an initial FIRM or after December 31, 1974, whichever is later, and includes any subsequent improvements to such structures. For floodplain management purposes, *new construction* means structures for which the *start of construction* commenced on or after the effective date of the floodplain management regulation adopted by a community and includes any subsequent improvements to such structures.

19. *"New Manufactured Home Park or Subdivision"* shall mean a manufactured home park or subdivision for which the construction of facilities for servicing the lots on which the manufactured homes are to be affixed (including at a minimum, the installation of utilities, the construction of streets, and either final site grading or the pouring of concrete pads) is completed on or after the effective date of the floodplain management regulations adopted by a community.

20. *"Recreational Vehicle"* shall mean a vehicle which is:

(a) Built on a single chassis; or

(b) Four hundred (400) square feet or less when measured at the largest horizontal projection; or

(c) Designed to be self-propelled or permanently towable by a light-duty truck; or

(d) Designed primarily not for use as a permanent dwelling but as temporary living quarters for recreational, camping, travel, or seasonal use.

21. *"Special Flood Hazard Area"* shall mean the land in the floodplain within a community subject to a 1 percent or greater chance of flooding in any given year. The area may be designated a Zone A on the Flood Hazard Boundary Map (FHBM). After detailed ratemaking has been completed in preparation for publication of the Flood Insurance Rate Map (FIRM), Zone A usually is refined into Zones A, AO, AH, A1-30, AE, A99, AR, AR/AI-30, AR/AE, AR/AO, AR/AH, AR/A, VO or V1-30, VE, or V. For purposes of these regulations, the term "special flood hazard area" is synonymous in meaning with the phrase "area of special flood hazard".

22. *"Start of Construction"* includes substantial improvement, and shall mean the date the building permit was issued, provided the actual start of construction, repair, reconstruction, rehabilitation, addition placement, or other improvement was within 180 days of the permit date. The actual start means either the first placement of permanent construction of a structure on a site, such as the pouring of slab or footings, the installation of piles, the construction of columns, or any work beyond the stage of excavation; or the placement of a manufactured home on a foundation. Permanent construction does not include land preparation, such as clearing, grading and filling; nor does it include the installation of streets and/or walkways; nor does it include excavation for a basement, footing, piers, or foundations or the erection of temporary forms; nor does it include the installation on the property of accessory buildings, such as garages or sheds not occupied as dwelling units or not part of the main structure. For a substantial improvement, the actual start of construction means the first alteration of any wall, ceiling, floor, or other structural part of a building, regardless whether that alteration affects the external dimensions of the building.

23. *"Structure"* shall mean, for floodplain management purposes, a walled and

roofed building, including a gas or liquid storage tank that is principally above ground, as well as a manufactured home. *Structure*, for insurance purposes, means:

(a) A building with two or more outside rigid walls and a fully secured roof, which is affixed to a permanent site;

(b) A manufactured home; or

(c) A travel trailer without wheels, built on a chassis and affixed to a permanent foundation, that is regulated under the community's floodplain management and building ordinances or laws.

For the latter purpose, "structure" does not mean a recreational vehicle or a park trailer or other similar vehicle, except as described in (c) of this definition, or a gas or liquid storage tank.

24. *"Substantial Damage"* shall mean damage of any origin sustained by a structure whereby the cost of restoring the structure to the before damaged conditions would equal or exceed 50 percent of the market value of the structure before the damage occurred.

25. *"Substantial Improvement"* shall mean any reconstruction, rehabilitation, addition, alteration or other improvement of a structure, during any 5 year period, the cumulative cost of which equals or exceeds fifty (50) percent of the market value of the structure before the "start of construction" of the improvement. This term includes structures which have incurred "substantial damage", regardless of the actual repair work performed. The term does not, however, include any project for improvement of a structure to correct existing violations of state or local health, sanitary, or safety code specifications which have been identified by the state or local code enforcement official and which are the minimum necessary to ensure safe conditions, or any alteration of a "historic structure" provided that the alteration will not preclude the structure's continued designation as a "historic structure".

26. *"Violation"* shall mean the failure of a structure or other development to be fully compliant with the community's floodplain management regulations. A structure or other development without the elevation certificate, other certifications, or other evidence of compliance required in 44 CFR 60.3 is presumed to be in violation until such time as that documentation is provided.

F. <u>Sewer Regulation Definitions.</u>

For the purpose of Chapter 11 of the Code, the following special definitions shall apply:

1. *"Biochemical Oxygen Demand (BOD)"* shall mean the quantity of oxygen utilized in the biochemical oxidation of organic matter under standard laboratory procedure in five (5) days at twenty (20) Celsius, expressed in milligrams per liter.

2. *"Building Drain"* shall mean that part of the lowest horizontal piping of a drainage system which receives the discharge from soil, waste, and other drainage pipes inside the walls of the building and conveys it to the building sewer, beginning five (5) feet (1.5 meters) outside the inner face of the building wall.

3. *"Building Sewer"* shall mean the extension from the building drain to the public sewer or private sewer or other place of disposal. Each building sewer is a private line and must be maintained by the property owner.

4. *"Combined Sewer"* shall mean a sewer receiving both surface runoff and sewage.
5. *"Garbage"* shall mean solid wastes from the domestic and commercial preparation, cooking, and dispensing of food, and from the handling, storage, and sale of produce.
6. *'High Strength Waste"* shall mean wastewater that exceeds an average concentration of 300 mg/L BOD, 330 mg/L TSS, fat, oil, grease or other waste exceeding that normally expected from domestic sewage.
7. *"Industrial Wastes"* shall mean liquid or gaseous wastes from industrial manufacturing processes, trade, or businesses as distinct from sanitary sewage.
8. *"Natural Outlet"* shall mean an outlet into a water-course, pond, ditch, lake, or other body of surface or ground water.
9. *"Person"* shall mean any individual, firm, company, association, society, corporation, or group.
10. *"pH"* shall mean the logarithm of the reciprocal of the weight of hydrogen ions in grams per liter of solution.
11. *"Properly Shredded Garbage"* shall mean the wastes from the preparation, cooking, and dispensing of food that have been shredded to such a degree that all particles will be carried freely under the flow conditions normally prevailing in public sewers with no particle greater than one-half (½) inch (1.27 centimeters) in any dimension.
12. *"Public Sewer"* shall mean a sewer in which all owners have equal rights which is controlled by public authority.
13. *"Sanitary Sewer"* shall mean a sewer which carries sewage not including storm, surface, and ground waters.
14. *"Sewage"* shall mean a combination of the water-carried wastes from residences, business buildings, institutions, commercial and industrial establishments, together with such ground, surface, and storm waters as may be present.
15. *"Sewage Treatment Plant"* shall mean any arrangement of devices and structures used for treating sewage.
16. *"Sewage Works"* shall mean all facilities for collecting, pumping, treating, and disposing of sewage.
17. *"Sewer"* shall mean a pipe or conduit for carrying sewage.
18. *"Slug"* shall mean any discharge of water, sewage, or industrial waste which in concentration of any given constituent or in quantity of flow exceeds for any period of duration longer than fifteen (15) minutes, more than five (5) times the average twenty-four (24) hour concentration or flows during normal operation.
19. *"Storm Drain or Storm Sewer"* shall mean a sewer which carries storm and surface water and drainage, but excludes sewage and industrial wastes, other than unpolluted cooling water.
20. *"Superintendent"* shall mean the manager of the Sewage Department or his authorized deputy, agent or representative.
21. *"Suspended Solids"* shall mean solids that either float on the surface of, or are suspended in water, sewage, or other liquids, and which are removable by laboratory filtering.

22. *"Water-Course"* shall mean a channel in which a flow of water occurs, either continuously or intermittently.
23. *"Secretary"* shall mean the Secretary of the Agency of Natural Resources, State of Vermont, or their designee.

G. Sign Regulation Definitions.

For the purposes of Section 714 of this Code, the following special definitions shall apply:

1. *"Billboard"* shall mean an off-premises sign owned by a person, corporation, or other entity that engages in the business of selling the advertising space on that sign.
2. *"Electronic Message Board"* shall mean a sign with a message copy or other display that is produced and periodically changed electronically or electrically that is attached to another sign, or to the support structure. The message copy or display shall be limited to public service announcements, time and temperature, and goods or services available on the premises, and shall consist of words, letters, numbers and punctuation only. Illumination shall be of a constant intensity, and shall not blink, flash or give the appearance of movement.
3. *"Facade"* shall mean the principal face of a building, usually facing the street and/or containing a public entrance.
4. *"Replacement Cost"* shall mean the estimated total cost of replacement, at fair market rates, with the same or similar materials, by a professional contractor.
5. *"Sign"* shall mean any words, lettering, parts of letters, figures, numerals, phrases, sentences, emblems, devices, designs, images, trade names, and trade marks by which anything is made known, that are used to identify, advertise, or attract attention to an individual, firm, association, corporation, profession, business, place, event, commodity, or product which are visible from a public thoroughfare or right-of-way.

H. Stormwater Regulation Definitions.

For the purposes of Section 713 of the Code, the following special definitions shall apply:

1. "*Alter*" shall mean any site activity that measurably changes the ability of the ground surface area to absorb water or will change existing surface drainage patterns. Alter may also be represented as the alteration of drainage characteristics or conducting any activity that disturbs the land.
2. "*Best Management Practices" (BMP)* shall mean any structural or non-structural site improvements that are recognized to be the most effective and practical means to prevent and/or reduce increases in stormwater volumes and flows, reduce point and non-point source pollution and promote stormwater quality improvement with protection to the environment. "*Structural"* BMPs are devices engineered and constructed to provide treatment and temporary storage of stormwater runoff. "*Non-Structural"* BMPs use natural measures involving site characteristics to reduce the volume of stormwater or eliminating the source of the pollutant. Non-structural BMPs do not require extensive construction effort in order to promote pollutant reduction. A schedule of activities, prohibitions of practices, maintenance procedures, and other management practices to prevent or reduce water pollution, including, but not limited

to, the stormwater treatment practices (STPs) set forth in the Vermont Stormwater Management Manual.

3. "*Erosion and Sediment Control Plan*" shall mean a plan that indicates the specific measures and their sequencing for use to control sediment and erosion on a development site during and after construction.

4. "*Existing Development*" shall mean a development that was built prior to the effective date of the adoption of this Code.

5. *"Green Stormwater Infrastructure (GSI):* shall mean a suite of systems and practices that restore and maintain natural hydrologic processes in order to reduce the volume and water quality impacts of stormwater runoff. GSI is a structural approach to stormwater management that focuses on managing stormwater impacts using natural processes such as infiltration, evapotranspiration, and storage and reuse. In contrast to gray stormwater infrastructure, GSI is used in a decentralized fashion to treat stormwater as close to the source as possible.

6. "*Impervious area, surface, or cover"* shall mean developed areas of land that prevent or significantly impede the infiltration of stormwater into the soil. Typical impervious surfaces include, but are not limited to roofs, sidewalks, walkways, private driveways, parking lots, access extensions, alleys, and other paved, engineered, compacted, or gravel surfaces.

7. "*Infiltration*" shall mean the process through which stormwater runoff penetrates into soil from the ground surface.

8. *"Low Impact Development (LID):* shall mean an innovative land planning and design approach which seeks to maintain a site's pre-development ecological and hydrological function through the protection, enhancement, or mimicry of natural processes. LID is primarily a nonstructural approach to stormwater management that focuses on avoiding and minimizing stormwater impacts through better site design.

9. "*Maintenance Agreement*" shall mean a legally recorded document that acts as a property deed restriction and provides for long-term maintenance of stormwater management practices.

10. "*MS4*" shall mean the Municipal Separate Storm Sewer System.

11. "N*ew Development*" shall mean the construction of new impervious surfaces on a tract or tracts of land occurring after the effective date of this Code.

12. "*Non-Stormwater Discharge*" shall mean any discharge to the storm drain system that is not composed entirely of storm water.

13. "*Pollutant*" shall mean anything which causes or contributes to pollution. Pollutants may include, but are not limited to: paints, varnishes, solvents; oil and other automotive fluids; non-hazardous liquid and solid wastes and yard wastes; refuse, rubbish, garbage, litter, or other discarded or abandoned objects, ordinances, and accumulations, so that same may cause or contribute to pollution; floatables; pesticides, herbicides, and fertilizers; hazardous substances and wastes; sewage, or other wastes containing fecal coliform and pathogens; dissolved and particulate metals; animal wastes; wastes and residues that result from constructing a building or structure; and noxious or offensive matter of any kind.

14. "*Redevelopment*" shall mean in the context of stormwater, any construction,

alteration, or improvement exceeding ten thousand (10,000) square feet impervious surface on previously developed land.

15. "*Riparian Buffer"* shall mean the width of land adjacent to lakes or streams between the top of the bank or top of slope for streams and the edge of allowed project activity. Riparian buffer zones are typically undisturbed areas consisting of trees, shrubs, groundcover plants, duff layer, and naturally vegetated uneven ground surfaces, that protect the water body, the shoreline and the adjacent riparian corridor ecosystem from the impact of land development. See Section 516 of this Code.

16. "*Runoff"* shall mean drainage or flood discharge that leaves an area as surface flow or as pipeline flow that has reached a channel or pipeline by either surface or sub-surface routes.

17. "*Sediment"* shall mean soil, sand, and minerals washed from land into water, usually after rain. Sediment can destroy fish nesting areas, clog animal habitats, and cloud water so that sunlight does not reach aquatic plants.

18. "*Stormwater"* shall mean any surface flow, runoff, and drainage consisting entirely of water from any form of natural precipitation, and resulting from such precipitation.

19. "*Stormwater Management"* shall mean the use of structural or non-structural practices that are designed to reduce stormwater runoff pollutant loads, discharge volumes, and/or peak flow discharge rates.

20. "*Stormwater System"* shall mean storm sewers; outfall sewers; surface drains; natural and manmade wetlands; channels; ditches; wet and dry bottom basins; rain gardens; and other control equipment necessary and appurtenant to the collection, transportation, conveyance, pumping, treatment, disposal, and discharge of regulated stormwater runoff.

21. *Stormwater Treatment Practice Calculator (STP)* - shall mean a tool developed by the Vermont Department of Environmental Conservation to estimate total phosphorus load reduction achieved by STPs

22. "*TMDL"* shall mean Total Maximum Daily Load as established by the State of Vermont Water Quality Division for management and restoration of impaired waterways. TMDLs are contained within applicable impaired watersheds that have been determined to not meet water quality criteria under Section 303d of the Clean Water Act.

23. *Vermont Department of Environmental Conversation Best Management Practice (BMP) Tracking Table (as amended)*-shall mean a workbook designed to track stormwater practices that are owned or controlled by a municipality.

24. "*Vermont Stormwater Management Manual Rule and Design Guidance – (as amended)"* shall mean the guidance manual referenced in this Code that includes regulatory requirements for the management of stormwater and technical guidance to assist in the design of stormwater treatment systems issued by the State of Vermont

I. Riparian Buffer District Definitions.

For the purposes of Section 516 of the Code, the following special definitions shall apply:

1. *"Riparian Buffer"* shall mean a vegetated area, including trees, shrubs and

herbaceous vegetation, which exists or is established to protect a stream or wetland. Alteration of this natural area is strictly limited. The buffer setback is defined as the horizontal distance from a stream bank or channel, shoreline or wetland area, to the nearest part of a building, structure or impervious surface on the property.

2. "*Non-Point Source Pollution*" shall mean pollution which is generated by various land use activities rather than from an identifiable or discrete source, and is conveyed to waterways through natural processes, such as rainfall, stormwater runoff, or ground water seepage rather than direct discharge. This may include surface run off from individual sites or properties.

3. "*Stream*" shall mean the full length and width, including the bed and banks, of any moving watercourse including creeks, brooks, rivers, branches, and kills. A stream has a channel, whether natural or artificial, that periodically or continuously contains moving water, has a defined bed, and has banks that serve to confine water at low to moderate flows. Streams include intermittent streams that have a defined channel and evidence of sediment transport, even if such streams do not have surface water flow throughout the year and/or throughout the channel.

4. "*Stream Banks*" shall mean the physiographic features that normally contain streams within a channel. The bank is distinct from the streambed, which is normally wetted and provides a substrate that supports aquatic organisms.

5. "*Top of Bank*" shall mean the point along a streambank where an abrupt change in slope is evident, and where the stream is generally able to overflow the banks and enter the adjacent floodplain during flows at or exceeding the average annual high water stage.

6. "*Top of Slope*" shall mean a break in slopes adjacent to steep-banked streams that have little or no floodplain.

7. "*Wetlands*" shall mean lands that are inundated or saturated by surface water or groundwater with a frequency sufficient to support significant vegetation or aquatic life that depend on saturated or seasonally saturated soil conditions for growth and reproduction. Such areas include but are not limited to: marshes, swamps, sloughs, potholes, river and lake overflows, mud flats, fens, bogs, and ponds. These areas are directly regulated under the State of Vermont and Federal regulations directly relating to wetland classification and delineation.

SECTION 202: GENERAL RULES.

The rules as set forth in this Section shall apply to any interpretation of this Code unless specifically limited or altered by a specific provision of this Code or a Court of competent jurisdiction.

A. Generally. All provisions, terms, phrases or expressions shall be liberally construed in order that the true intent and meaning of the Planning Commission and City Council is met.

B. Gender. Words which are in the masculine gender shall be construed to include the feminine and neuter.

C. Number. Words used in the singular may include the plural and words in the plural may include the singular. All interpretations shall include the context in which the words are used.

D. Tense. Words in the past or present tense include the future as well as the past or present.

E. Year. The word year shall mean a calendar year unless otherwise indicated.

F. Shall; Should; May; Will; Includes. The word "shall" is mandatory; the word "may" is authorized but not required, the word "should" is desirable, but not mandatory; the word "includes" shall not limit a term to a specific example or series of examples, but is intended to extend its meaning to all other circumstances or examples of like kind or character.

CHAPTER 3: DECISION MAKING AND ADMINISTRATIVE BODIES

SECTION 301: CITY COUNCIL

The duly elected City Council shall have all the authority granted it by general law of the State of Vermont and the City Charter, including, but not limited to, the following:

A. To adopt the Comprehensive Plan and any amendments thereto.
B. To adopt the City of Essex Junction Land Development Code and any amendments thereto.
C. To appoint the members of the Development Review Board and Planning Commission, as specified herein.
D. To establish reasonable fees as necessary to administer the Land Development Code.
E. To act pursuant to Section 506 on requests for waivers from the noise standards in Section 718.
F. To act as a Board of Sewer Commissioners as necessary to administer the requirements of Chapter 11.
G. To act as a Board of Water Commissioners as necessary to administer the requirements of Chapter 14.
H. To act and approve requests regarding access to Rights-of-way and curb cuts pursuant to Sections 509 and 705.

SECTION 302: PLANNING COMMISSION

A. Creation
The Planning Commission shall be that body created by § 803 of the City Charter pursuant to 24 V.S.A. §§4321(a) and 4322.

B. Powers and Duties
The Planning Commission shall have all powers granted municipal planning commissions under 24 V.S.A. § 4325, including, but not limited to, the following:
1. To provide recommendations and advice to the City Council on issues specified in this Code or as requested by the City Council.
2. To prepare, cause to be prepared, or review any amendments to the Comprehensive Plan or this Land Development Code.
3. To establish sub-committees to carry out its work.
4. To perform any other duties which may be assigned to it.

C. Membership
Members of the Planning Commission shall be among the qualified voters of Essex Junction. Members shall be appointed by the City Council and appointed for 3-year terms. The Commission shall have five (5) members.

D. Qualifications
Members shall be appointed based upon their general knowledge of planning, the process

of development within the City, and interest in local government. A majority of the Commission may not be employed by the same employer. All applicants shall advise the City Council of all potential conflicts of interest upon consideration for an appointment.

E. Officers
The Commission shall annually elect a Chair and Vice-Chair and may create and fill other offices as deemed necessary. The Chair shall have the authority to appoint Committees as deemed necessary.

F. Quorum
No meeting of the Commission shall be called to order, nor shall any business be transacted by the Commission, without a quorum consisting of three (3) members being present. Meetings deferred due to lack of a quorum shall be continued to a date specified by the Chair.

G. Decisions
Decisions shall be made by the Commission by an affirmative vote of a majority of the members present.

SECTION 303: DEVELOPMENT REVIEW BOARD

A. Creation
The Development Review Board shall be that body created by § 804 of the City Charter pursuant to 24 V.S.A. §4461.

B. Powers and Duties
The Development Review Board shall have all powers granted such boards under 24 V.S.A. § 4460, including, but not limited to the following:

1. To act pursuant to Section 502.C on requests for approval of conditional uses.
2. To act pursuant to Section 511 on requests for Planned Developments.
3. To act pursuant to Section 502.I on requests for approval of Site Plans.
4. To act pursuant to Section 503 on requests for approval of Subdivisions.

To review decisions of the Administrative Officer pursuant to Chapter 17.

5. To act pursuant to Chapter 17 to review requests for variances from the requirements of Chapters 6 and 7.
6. To perform other responsibilities as may be specified by Vermont Statutes.

C. Membership
Members of the Development Review Board shall be among the qualified voters of Essex Junction. Members shall be appointed by the City Council for 3-year terms. The Board shall have five (5) members and may have alternates.

D. Qualifications
Members shall be appointed based upon their general knowledge of planning, the process

of development within the City, and interest in local government. A majority of the Board may not be employed by the same employer. All applicants shall advise the City Council of potential conflicts of interest upon consideration for an appointment.

E. Officers
The Board shall annually elect a Chair and Vice-Chair and may create and fill other offices as it deems necessary.

F. Quorum
No meeting of the Board shall be called to order, nor shall any business be transacted by the Board, without a quorum consisting of three (3) members being present. Meetings deferred due to lack of a quorum shall be continued to a date specified by the Chair.

G. Decisions
As specified in Title 24, Chapter 117, Section (a)4461 of Vermont Statutes, any action taken by the Board shall be taken by the concurrence of a majority of the Board.

SECTION 304: COMMUNITY DEVELOPMENT DEPARTMENT

A. Composition
There shall be a Community Development Department headed by a Community Development Director. The individual designated by the City Manager to act as Administrative Officer shall be a member of the Community Development Department.

B. Duties and Responsibilities of the Community Development Department.
1. To accept and review all applications as specified herein.
2. To provide recommendations to the City Council, Commission and Development Review Board as specified herein.
3. To provide assistance to all applicants for any development approvals required by this Code.
4. To represent the Commission at meetings, hearings, conferences and workshops as directed.
5. To complete other tasks as assigned by the Commission.

C. Duties of the Community Development Director.
1. To determine whether proposed development activities require review pursuant to §503 regarding subdivisions.
2. To supervise the activities of the Community Development Department.

D. Duties of the Administrative Officer.
1. To act pursuant to §502.A. on requests for approval of Zoning Permits.
2. To act pursuant to §502.A.1. to determine what review is required prior to issuance of a Zoning Permit.
3. To act pursuant to §502.B. on requests for approval as a Permitted Use.

4. To act pursuant to §502.G. on requests for approval of Home Occupations.
5. To act pursuant to §502.D. on requests for approval of Temporary Uses.
6. To act pursuant to §502.H. on requests for approval of Signs.
7. To act pursuant to §502.I. on requests for approval of Accessory Apartments.
8. To act to initiate enforcement proceedings for any violation of Chapters 6 or 7.
9. To undertake such other actions as are directed by the Community Development Director.

SECTION 305: PUBLIC WORKS SUPERINTENDENT

The individual appointed by the City Manager to head the City Public Works Department which is responsible for City streets and parking lots, the City water supply system and the City sewage disposal system.

SECTION 306: WATER QUALITY SUPERINTENDENT

The individual appointed by the City Manager to head the Water Quality department, which is responsible for the Wastewater facility, the City pump stations and the City storm water system and best management practices.

CHAPTER 4: REGULATION OF LAND USE ACTIVITIES

SECTION 401: APPROVALS REQUIRED

No person shall commence any of the following activities without first obtaining the required approval from the City. Any building permit may be subject to additional state or federal permits.

A. Approval required for the construction, demolition, or alteration of any structure, the making of any material change in the use of any structure or land, the making of a change in the intensity of use of a structure or land, or the filling of land pursuant to Section 502.

B. Approval required for the division of land into two (2) or more lots, parcels, sites, plots, units or interests for the purpose of sale.

C. Approval required for uncovering or making any connections with or openings into, or using, altering, or disturbing any public sewer or appurtenance thereof, or proposing a new discharge into a public sewer or a substantial change in the volume or character of pollutants that are being discharged into such sewer pursuant to Section 504.

D. Approval required for construction of a private sewage disposal system or private sewer or connection to any such system pursuant to Section 505.

E. Approval required for uncovering or making any connections with or openings into, or using, altering, or disturbing any public water line or appurtenance thereof pursuant to Section 507.

F. Approval required for construction of a private water supply or private water line or connection to any such supply or line pursuant to Section 508.

G. Approval required for opening, constructing, or reconstructing any driveway, entrance, or approach into a public road right-of-way; obstructing, altering, or changing a ditch, culvert, or drainage course that drains a public roadway; depositing material or placing improvements in a public right-of-way; or altering lands adjacent to a public right-of-way to divert surface waters onto the right-of-way pursuant to Section 509.

H. A Certificate of Occupancy for the construction of a new building or the alteration of an existing building which is vacant during the process of alteration pursuant to Section 510.

SECTION 402: PROHIBITED ACTIVITIES

A. The creation of sound that exceeds the standards set forth in Chapter 7.

SECTION 403: EXEMPT ACTIVITIES

A. Activities lawfully existing on the date this Code becomes effective may continue unless specifically provided otherwise herein, or as this Code is hereafter amended.

B. Remodeling the interior of any residential dwelling provided that no alteration to the exterior of the structure is proposed and there is no increase in dwelling units.

C. Remodeling of the interior of any commercial structure if there is no change in use nor increase in space utilized for business purposes.

D. Exterior maintenance work on any structure which does not increase the dimensions of the structure at any point.

E. Routine maintenance and repair of public facilities.

SECTION 404: EFFECT OF PRIOR APPROVALS.

A. The provisions of this Code shall not affect development for which specific approval has been granted under previous Ordinances, provided that development has commenced within one (1) year of the effective date of this Code.

F. An application for subdivision which has received Sketch Plan and Preliminary Plat approval shall not be required to meet the standards of this Code if application for Final Plat approval is received within six (6) months of the effective date of this Code.

CHAPTER 5: DEVELOPMENT REVIEW PROCEDURES

This Chapter establishes procedures for review of any activity that requires approval under the Land Development Code.

SECTION 501: PROCEDURES OF GENERAL APPLICABILITY

A. Pre-Application Conference

Prior to submittal of an application for any development, the applicant should schedule a pre-application conference with Staff. Staff shall review the proposal, identify required permits or approvals, and advise the applicant of necessary application materials.

B. Filing of Applications

All applications requiring a public meeting or hearing must be received and determined complete forty-five (45) days prior to a scheduled meeting and shall be submitted on forms provided by the Community Development Department. Supplemental materials shall be attached to the form as required. Once an application is submitted to the Community Development Department for review, and a public meeting or hearing has been warned, any additional information must be submitted at least 10 days prior to the public meeting or hearing. In addition, no changes which significantly alter the concept of the project may be made once an application has been submitted and any changes must be reviewed by staff prior to Development Review Board consideration. Applications shall not be accepted for review by the Community Development Department, if outstanding zoning violations exist on the property.

C. Determination of Completeness

Within ten (10) working days after an application form for development approval has been received, the Community Development Department shall determine whether the application is complete. If Staff determines that the application is incomplete, Staff shall notify the applicant in writing of the deficiencies. This provision shall not apply to applications for Temporary Use Permits.

D. Notice of Public Hearings and Public Meetings

Notice of public hearings or meetings required under this Code shall comply with this Section, 24 V.S.A. § 4464 and with Vermont's Open Meeting Law (1 V.S.A. §§ 310-314) unless otherwise specified.

1. Published Notice. Notice for all public meetings with applications scheduled for review shall be published in a local newspaper of general circulation not less than seven (7) days prior to a scheduled meeting. No application shall be warned for a meeting or hearing, unless the application has been determined to be complete. Notice for all Public Hearings required under this Code shall be published not less than fifteen (15) days prior to the scheduled hearing in a local newspaper of general circulation pursuant to Section 4447 of Title 24 Chapter 117 of Vermont Statutes. All public notices shall include a description of the purpose of the application, hearing or meeting date,

applicant, and time and location of hearing or meetings.

2. Posted Notice. All scheduled hearings or meetings shall be posted on a bulletin board in three locations. One of the three notices for public hearings shall be posted within view of the public Right-of-Way most nearly adjacent to the property for which an application is made.

3. Mailed Notice. Community Development Department staff shall mail notice to all property owners adjoining the property subject to development, including the owners of properties which would be contiguous to the property subject to development but for the interposition of a highway or other public right-of-way and, in any situation in which a variance is sought regarding setbacks from a State highway, also including written notification to the Secretary of Transportation. If the proposed development is located on a private street, notice shall also be sent to the owners of all properties having any rights of usage of the private street.

4. Property Notice. All applicants for any development approval which requires public notice shall, no less than seven (7) days prior to the public hearing or meeting, post a sign on the property. Said sign shall be provided by the Community Development Department and shall indicate the date, time, location and purpose of the hearing or public meeting.

5. Defects in Notice. A defect in notice not caused by an intentional or negligent act or omission of the applicant shall not be grounds for a continuance of the hearing, nor in any way affect the action taken at such hearing.

E. Public Hearing Procedures:

1. Staff Report. Staff shall present a summary of the application and provide recommendations.

2. Applicant presentation. The applicant may present evidence relevant to the application. Information not relevant to the application may be disallowed by the Chair.

3. Public Input. The hearing shall be opened for public comment. Public comment is restricted to the issue before the Development Review Board or City Council. Information not relevant to the issue at hand may be disallowed by the Chair.

4. Deliberations. The Development Review Board or City Council shall review the application, staff recommendations, public input, and all applicable laws or regulations prior to making a decision. The decision may be postponed until a subsequent meeting and deliberations may be made in executive session.

5. Decisions. The Development Review Board or City Council shall make its decision on all applications in a public meeting or shall provide written findings as specified below.

(a) The Board shall make and issue written findings and conclusions supporting its decision on all applications before it.

(c) The City Council, at their discretion, may make and issue written findings and conclusions supporting its decision on any application or appeal before it.

F. Public Meetings

Public meetings with no applications for development approval shall be posted in two

public locations not less than 48 hours prior to the scheduled meeting. The Chair shall have the authority to schedule presentations, solicit public comment, and direct the meeting in an orderly fashion.

G. Computation of Time

The time within which an action is to be completed shall be computed by excluding the first day and including the last day; if the last day is a Saturday, Sunday or legal Holiday, that day shall be excluded except as otherwise provided by Vermont Statutes.

SECTION 502: APPROVAL PROCEDURES FOR ACTIVITIES REQUIRING REVIEW UNDER CHAPTERS 6 AND 7

A. Zoning Permit Requirement

A zoning permit is required for the construction of any structure, the making of any material change in the use of any structure or land, the making of a change in the intensity of use of a structure or land, or the filling of land. For the purpose of this Code, the activities identified in this section are referred to as "development activities".

1. Approval Required. Issuance of a zoning permit shall require review and approval under one or more of the following review procedures, as determined by the staff:

(a) Permitted Use - Section 502.B
(b) Conditional Use - Section 502.C
(c) Temporary Use - Section 502.D
(d) Professional Office Development - Section 502.E
(e) Site Plans - Section 502.F
(f) Home Occupation - Section 502.G
(g) Signs - Section 502.H
(h) Accessory Apartments - Section 502.I
(i) Non-conforming Use - Section 502.J
(j) Noncomplying Structure - Section 502.K
(k) Existing Small Lots - Section 502.L
(l) Planned Unit Development (PUD) - Section 502.M
(m) Telecommunications – Section 502.N
(n) Master Plans – Section 502.O

2. Application Requirements. An application for a zoning permit shall include the following:

(a) A plan, drawn to scale, showing the dimensions of the lot and all structures, required setbacks, parking spaces and any required landscaping or screening elements not otherwise detailed on a landscaping plan.

(b) A description of the proposed use or uses of the land and structures and existing or proposed uses of adjacent lands.

(c) Floor Plans indicating the location dimensions of major features such as units, rooms, elevators, stairs, doors and windows. This requirement may be waived by the Administrative Officer for single-family dwellings if it is deemed to

not be necessary to achieve a clear understanding of the proposal.

(d) If not otherwise required through a site plan application, the Administrative Officer may require a survey for new construction or additions of over five hundred (500) square feet if the addition is within ten (10) feet from any required setback line or for other projects, where staff determines a survey is necessary due to the size and scope of the project. Such survey of the property shall be prepared by a licensed Vermont Land Surveyor and shall show property boundaries, easements, as well as existing and proposed structures.

(e) Any other information required by Staff to provide a clear understanding of the proposal.

(f) Applications or requests for all other permits or approvals which may be necessary (i.e. water and sewer connections).

3. Time Limitations:

(a) Staff shall act to approve or deny all permit applications within thirty (30) days of receipt of a complete application. If, however, Staff determines that the application is incomplete or does not include evidence that all conditions established by the Development Review Board have been met, Staff shall notify the applicant in writing of deficiencies. If additional information or action to remedy the deficiencies is not received within thirty (30) days of the notification, Staff shall deny the permit application.

4. Approval Standards and Issuance of Permit. Staff shall issue a Zoning Permit upon determination that the applicant has obtained any approval required under Section 502.A.1 and has complied with any conditions of the approval(s) granted. Each permit shall indicate the time period within which an appeal may be taken (fifteen (15) days) and the following obligations of the permittee:

(a) To immediately post the permit on the property in a location visible from the street and to keep it posted until the development is complete.

5. Administrative Requirements. Upon issuance of a permit, Staff shall:

(a) Deliver a copy to the listers/assessor of the Town.

(b) Post a copy of the permit in at least one public place in the City for a period of at least fifteen (15) days after the date of issuance of the permit.

6. Denial of permit application. If Staff determines the application does not satisfy the requirements of this Code, the application shall be denied and the applicant notified in writing stating the reasons for denial.

7. Appeals. Any interested person may appeal a decision of Staff regarding a Zoning Permit by filing an appeal in accordance with Section 1702 below.

8. Reapplication. A permit may be resubmitted at any time with required additions or corrections. If the re-submittal remedies all deficiencies and is received within thirty (30) days of the initial denial, it shall be attached to the original application and no additional fee shall be required.

9. Expiration of Permits. A zoning permit shall expire one year from the date of issuance. If the applicant has commenced work, the permit may be extended without fees for an additional year if requested in writing prior to the date of expiration and may not be renewed again. If work is not completed after two years, the applicant will be

required to obtain a new permit and pay all appropriate fees in place at the time the permit application is submitted.

B. Approval of Permitted Uses

1. Purpose. Permitted uses are considered to be appropriate within the District in which they are located. These uses are permitted "by right" subject to the required permits and procedures specified in this Code. Review of permitted uses involves a minimal degree of discretion and requires only administrative review to determine compliance with standards applicable to the particular permitted use.

2. Review Requirement. Development activities involving those uses identified as "Permitted Uses" are subject to review under the standards applicable to such uses. Permitted uses, within this code are the uses designated by an "X" on the Use Chart set forth in Section 622. Uses which do not fall under a definition of one of the uses specified in the Use Chart in Section 622, shall be reviewed as permitted uses, if determined by the Administrative Officer to be substantially similar to one of the permitted uses within the District.

3. Approval Standards. Staff shall review an application for a permitted use to determine if it meets the dimensional requirements of Chapter 6 and the development standards of Chapter 7. Approval will be granted if staff determines that the use meets such standards.

4. Expiration of Approval. A decision approving a permitted use shall expire six (6) months from the date of approval if a zoning permit is not issued within such six-month period.

5. Appeals. Any interested person may appeal a Staff decision regarding a permitted use by filing an appeal in accordance with Section 1702.

C. Approval of Conditional Uses:

1. Purpose. To provide a review mechanism for uses which may be allowed in a District after review by the Development Review Board. A Conditional Use is not a permitted use and is allowed only upon specific action by the Board on a specific application.

2. Review Requirement. Development activities involving those uses identified as "Conditional Uses" are subject to review under the standards applicable to such uses. Conditional uses, within the meaning of this Code are those uses designated by a "C" on the Use Chart set forth in Section 622, below. Uses which do not fall under a definition of one of the uses specified in the Use Chart in Section 622, shall be reviewed as conditional uses, if determined by the Administrative Officer not to be substantially similar to one of the permitted uses within the District, or if determined by the Administrative Officer not to be substantially similar to one of the prohibited uses within the District.

3. Approval Standards:

(a) The proposed use will be consistent with the Comprehensive Plan.

(b) The proposed use will not adversely affect the character of the neighborhood.

(c) The proposed use will not be detrimental to adjoining properties.
(d) The proposed use will not negatively affect the public health, safety, or welfare.
(e) The design of the proposed use will minimize any potential adverse impacts.
(f) Specific standards for the proposed use as listed within Chapters 6 and 7 of this Code shall be met.
(g) The proposed use will not adversely affect traffic on streets in the vicinity of the project.
(h) The proposed use will not adversely affect the capacity of existing or planned public infrastructure.
(i) The proposed use will not adversely affect the utilization of renewable energy resources.
(j) Notwithstanding the above approval standards, uses defined in 24 V.S.A. § 4413 (Limitations on municipal bylaws), shall not be restricted beyond the limits specified therein.

4. Conditional Use Application Requirements. Conditional use applications must include all submittal requirement listed in Section 502.F.4 for Site Plan Applications unless staff determines such information is not necessary.

5. Public Hearings. The Board shall convene a public hearing for consideration of all Conditional Use applications.

6. Action by the Development Review Board. The Board shall deny, approve or approve with conditions all applications within forty-five (45) days of the closing of the public hearing. Failure to act within this period shall be deemed approval. The Board shall issue written findings and conclusions supporting its decision on all applications; and the decisions shall include any conditions or restrictions established to ensure that all standards will be met.

7. Expiration of Approval. A decision approving a conditional use shall expire two (2) years from the date of approval if a zoning permit is not issued within such one year period.

8. Appeal. Any interested person may appeal a decision regarding conditional use by filing an appeal in accordance with Section 1706 below.

D. Approval of Temporary Uses

1. Purpose. Within any district there are uses that may be appropriate on a temporary or limited basis. It is the intent of this Code to allow these uses on a limited basis.

2. Review Requirement. Activities involving those uses identified as "Temporary Uses" are subject to review under the standards applicable to such uses. Temporary Uses include: temporary activities authorized in the Planned Exposition District as specified in Section 612; activities identified as "temporary" in the land Use Chart at Section 622; the temporary parking of a vehicle for sale in accordance with Section 703(I); the temporary parking of storage trailers and boxes in accordance with Section 703(J) and temporary outdoor commercial activities in accordance with Section 706(G); the temporary sale of personal goods at garage or yard sales in accordance with Section

706(M).

3. Application Requirements. All applications for a Temporary Use Permit shall be submitted on forms provided by the Community Development Department. The application shall include:

(a) Description and location of the proposed use.

(b) Proposed duration of the use, (including time needed to set up materials, stands, products, or any structures which are to be used.)

(c) Location of any proposed signs.

(d) A description and map of circulation and parking areas.

(e) A description of the potential impact of the use on any public infrastructure or public services, including fire protection and police protection.

4. Approval Standards. Staff shall review all applications for Temporary Use Permits. Staff will issue permits upon finding that the application meets the requirements of applicable sections of this Code. Staff may place conditions upon any approval in the following areas:

(a) Time limits may be established for any use.

(b) Measures to ensure adequate parking, limit signs and traffic control.

(c) The location of any proposed temporary use may be restricted for public safety purposes.

(d) Conditions to ensure conformance with performance standards set forth in Section 718 and other applicable provisions of this Code.

5. Review Times. Staff shall review all applications for Temporary Use Permits within three (3) working days of receipt, excluding weekends and Holidays. This time limitation shall not apply if the application is incomplete.

6. Expiration of Permits. Permits shall expire as specified at the time of issuance. No time extensions shall be granted. Each activity shall require application for a new permit except as expressly provided herein.

7. Appeal of Denial. Any interested person may appeal a decision regarding a temporary use by filing an appeal in accordance with Section 1702 below.

E. Professional Office Development.

1. All activities involving professional office development as defined in Section 722 shall be reviewed pursuant to procedures set forth in this Section. All proposed professional office development shall be reviewed by the Development Review Board to determine if it is an acceptable use.

2. Review Standards. An application for professional office development shall meet the general standards applicable to permitted uses and the specific standards set forth in Section 722.

3. Expiration of Approval. An approval for Professional Office Development shall expire in accordance with terms set forth in the approval.

4. Appeals. Any interested person may appeal a decision of the Development Review Board regarding professional office development in accordance with the procedures set forth in Section 1706 below.

F. Approval of Site Plans

1. Purpose. To provide procedures for the timely and efficient review of applications for Site Plan approval.

2. Review Requirement. Development activities involving any use except activity involving fewer than five (5) housing units on a single lot, or a food truck are subject to review at a Public Meeting under the standards applicable for site plans.

3. Conceptual Site Plan. A Conceptual Site Plan Review is required for the proposal of five (5) or more housing units on a single lot. The purpose of the Conceptual Site Plan Review is to discuss initial project feasibility and to give the applicant the right to proceed. Detailed engineering studies are not required but sufficient data shall be submitted to enable the Development Review Board to review the merits of the proposal.

(a) Review of a Conceptual Plan shall require a public meeting.

(b) The Development Review Board may approve or deny a Conceptual Plan and may make suggestions to be included when the Final Site Plan is prepared.

(c) Approval of a Conceptual Plan authorizes the applicant to proceed to the next steps of the approval process but does not commit the Development Review Board to further approvals.

(d) Submittal requirements. The Conceptual Plan application shall include sufficient information to enable the Development Review Board to review the merits of the application and to determine that all Code standards will be met. At a minimum, the submittal shall include:

(i) The project name, address and legal description; name, address and telephone number of the developer and project design professionals.

(ii) The approximate location of all proposed land uses including the number of dwelling units and/or the number, type and typical square footage of non-residential buildings, and total square footage of the project.

(iii) The proposed height and number of stories of each building.

(iv) A sketch of a typical structure.

(v) The approximate location of proposed roads, parking areas, sidewalks, bikeways, fire lanes and other proposed circulation elements and patterns.

(vi) A landscape concept showing typical planting schemes, types of planting materials and general locations of major landscaping items such as berms, ponds, retaining walls or other man-made improvements.

(vii) The approximate location and size of proposed curb cuts on public or private streets, and the size and type of all interior curb cuts.

(viii) The approximate location and size of all common improvements, common open space and lands to be dedicated to public ownership.

(ix) An estimate or projected use of public infrastructure, including a preliminary statement regarding traffic, sewer, water demand impacts, and stormwater runoff mitigation.

(x) Information on surrounding properties, including land uses, zoning, ownership and traffic patterns.
(xi) The height, size, location and typical sketches of proposed signs and fencing, if any.
(xii) A preliminary analysis of drainage proposals, including a topographical map of the project area.
(xiii) An indication of proposed setbacks and minimum distances between proposed structures.
(xiv) A written request for any waivers to any standards contained in this Code, along with a justification for the request.
(xv) Any other information deemed pertinent to the review of the specific Conceptual Plan.
(xvi) Whenever a proposed site plan involves access to a State highway or other work in the State highway right-of-way such as excavation, grading, paving, or utility installation, the application for site plan approval shall include a letter from the Agency of Transportation confirming that the Agency has reviewed the proposed site plan and determined whether a permit is required under 19 V.S.A. § 1111. If the Agency determines that a permit for the proposed site plan is required under 19 V.S.A. § 1111, then the letter from the Agency shall set out any conditions that the Agency proposes to attach to the permit required under 19 V.S.A. § 1111.

4. Final Site Plan Application Requirements. The applicant shall submit a Site Plan, drawn to scale (including a north arrow) and documentation to include the following:

(a) A vicinity map drawn to scale which clearly shows the site in relationship to the surrounding property and specifies adjoining land use and zoning.
(b) Name, address and phone number of developer and all professionals working on the project.
(c) A survey of the property prepared by a licensed Vermont Land Surveyor which shows existing or proposed rights-of-way and easements. This is required for projects that involve new buildings. Staff may require a survey for additions of over five hundred (500) square feet if the addition is within ten (10) feet from any required setback line or for other projects, where staff determines a survey is necessary due to the size and scope of the project.
(d) Total land area and location, size, height, and number of stories of all existing and proposed structures and the distance from all structures to the nearest property line.
(e) Location and dimensions of existing and proposed easements, streets, driveways, and infrastructure.
(f) Provide clear identification of infrastructure proposed to be turned over to the Municipality as public infrastructure. Draft legal documents (which may include an irrevocable offer of dedication, easement deed, quit claim or warranty deeds) shall be submitted for proposed public infrastructure.
(g) Description of proposed use and floor areas of all structures and calculations of parking and loading requirements.

(h) A topographic map showing final ground contours at no more than two (2) foot intervals if staff determined that such information is necessary.
(i) Identification of existing natural features including rock outcroppings, wetlands, areas of excessive slope, and tree groupings.
(j) A detailed Landscape Plan by a landscape design professional. The Landscape Plan shall specify the type, size, quantity and location of all plant materials, existing and proposed.
(k) Lighting plan pursuant to Section 704.
(l) Impact analysis to include traffic generation and impact on public and/or private infrastructure.
(m) Proposed engineering design standards for all improvements required by this Code.
(n) As necessary, a traffic study.
(o) Written request for waivers of any requirements of this Code.
(p) Location of any proposed new water or sewer service connections with clear delineation of infrastructure proposed for acceptance as public.
(q) Proposed development schedule and phasing request, if applicable.
(r) Location and type of all proposed or required screening or buffering.
(s) Elevation of existing and proposed structures and any proposed change to height of existing structures.
(t) Location and type of all proposed signs.
(u) Phosphorus loads and removal calculations for stormwater infrastructure must be provided.
(v) Whenever a proposed site plan involves access to a State highway or other work in the State highway right-of-way such as excavation, grading, paving, or utility installation, the application for site plan approval shall include a letter from the Agency of Transportation confirming that the Agency has reviewed the proposed site plan and determined whether a permit is required under 19 V.S.A. § 1111. If the Agency determines that a permit for the proposed site plan is required under 19 V.S.A. § 1111, then the letter from the Agency shall set out any conditions that the Agency proposes to attach to the permit required under 19 V.S.A. § 1111.
(w) Whenever a proposed site plan involves significant construction impact to the public right-of-way, a Temporary Traffic Control Plan that considers the safety and operational needs of all transportation modes.
(x) Floor Plans indicating the location dimensions of major features such as units, rooms, elevators, stairs, doors and windows.
(y) Other additional information requested by Staff to provide a clear understanding of the project.

5. Review Standards. All applications for Site Plan approval shall be reviewed for neighborhood compatibility, effect on public infrastructure, traffic generation, public health, safety and welfare, and the General Development Standards specified in Chapter 7 of this Code. The location of fire lanes shall be reviewed by the Fire Chief.

6. Approval Conditions. The Development Review Board may consider and impose

conditions and safeguards with respect to the adequacy of traffic access, of circulation and parking, of landscaping and screening, and to protect the utilization of renewable energy resources.

7. Actions by Development Review Board. The Board shall review all applications for approval except as provided herein. The Board may table an application pending further information from the applicant. The application shall be denied if the applicant does not submit the requested information within the time specified by the Board. The Board may deny, approve, or approve with conditions, any application within forty-five (45) days after the hearing is closed. Failure to act within this time period shall be deemed approval.

8. Exceptions/Waivers. Upon receipt of a written request, the Board may consider and grant waivers to Site Plan standards as authorized in Chapter 7 of this Code.

9. Expiration of Approval. Site Plan approval shall expire two (2) years after approval if a Zoning Permit application has not been made. Staff may approve an extension not to exceed six (6) months upon receipt of a written request prior to expiration of the initial approval by the Board.

10. Appeal of Denial. An applicant may appeal a decision denying approval of a site plan by filing an appeal as specified in Section 1707 of this Code.

11. Site Plan Amendments/Minor Developments. Amendments to approved Site Plans shall be classified by Staff as a major or minor amendment based upon the following criteria:

(a) Major amendment. A major amendment requires review of the proposed changes by the Board and includes the following changes:

(i) Any change in land use density or intensity which requires increased parking or loading spaces.

(ii) Any proposed change which would result in the elimination or removal of existing landscaping required by the Board.

(iii) Any proposed change which would require the relocation of driveways or curb cuts on any public street or right-of-way.

(iv) Any proposed change which would require a waiver of any provision of this Code.

(v) Any change in location of structures which would reduce the approved setback.

(vi) Any major change in the location of landscape areas, sidewalks or bike paths.

(vii) Other proposed changes as determined by Staff which would alter the intent of findings.

(b) Minor amendment/development. A minor amendment or development application requires Staff review and approval. Staff may approve changes to existing sites where no site plan is on file (minor development) if the proposed change meets the criteria below. Applications for a minor development shall include only a zoning permit application. Any proposed development on a site with no approved site plan on file that doesn't meet the criteria below, shall submit a new site plan application for approval by the Board. Approval of

changes to a property without an approved site plan on file does not constitute an approved site plan and any future changes that don't meet the criteria below are subject to full site plan review by the Development Review Board. Staff reserves the right to defer applications to the Development Review Board which would significantly alter the existing site. Minor amendments/developments include the following changes:

(i) Any change in land use density or intensity which does not result in an increased requirement for parking or loading spaces.

(ii) Any engineering design changes as approved by the City Engineer.

(iii) Any addition of less than five hundred (500) square feet if the addition meets all of the requirements of this Code and does not involve a change of use, which exceeds required parking, traffic or infrastructure demands. Any addition which meets the requirements of Section 611.G.

(iv) Any change in lighting plans which meet the requirements of this Code.

(v) Minor changes in location of landscaped areas, sidewalks or bike paths.

(vi) Substitution of proposed planting materials from the approved planting list provided that the substitution does not change the overall design concept approved by the Board.

(vii) Minor changes in the location of structures.

(viii) Other minor changes as determined by Staff which do not alter the concept of the development, or the development as approved by the Board.

12. Appeals.

(a) Any interested person may appeal a Board decision regarding a Site Plan by filing an appeal in accordance with the procedures of Section 1707.

(b) Any interested person may appeal a Staff decision classifying a Site Plan Amendment or acting on a minor amendment by appealing to the Board pursuant to Section 1704.

G. Approval of Home Occupations

1. Purpose. To provide a process for expeditious review of applications for Home Occupation Permits.

2. Review Required. Any proposed Home Occupation as defined by this Code shall require a Home Occupation Permit.

3. Permit Application. Applications shall be made on forms supplied by the Community Development Department.

4. Standards of Review. Any application for Home Occupation Permit shall meet the provisions of Section 711. Staff shall approve or deny an application for a Home Occupation within three (3) days of receipt, and may establish conditions in any or all of the following areas:

(a) Hours of operation

(b) Expiration dates

(c) Parking
(d) Signs

5. Appeals. Any interested person may appeal a decision regarding a Home Occupation Permit to the Development Review Board pursuant to Section 1702 below.

6. Expiration of Permit. Home Occupation approvals shall expire sixty (60) days from the date of approval if not implemented.

H. Approval of Signs

1. The review and approval procedures for regulated signs and advertising features are specified in Section 714.

2. Appeals.

Any interested person may appeal a decision regarding a sign to the Development Review Board in accordance with the provisions of Section 1702 below.

I. Approval of Accessory Apartments

1. Purpose. To provide a mechanism for Administrative Officer review and approval of proposals to create accessory apartments in any Residential District.

2. Review Requirement. Any accessory apartment shall be reviewed as specified by the procedures in this section.

3. Review Procedures. The Administrative Officer may approve accessory apartments in accordance with the standards specified in Section 721.

4. Submittal Requirements. Sufficient information shall be submitted to enable the Administrative Officer to determine the possible impact of the proposal on all abutting residentially zoned properties. The following minimal requirements shall be met.

(a) A plot plan, which shows all existing structures, dimensions and distances from structures to property lines.
(b) The location of existing and proposed parking.
(c) The location of existing and proposed landscaping and screening.
(d) A drawing showing the existing structure arrangement and proposed location and arrangement of the accessory apartment.

5. Appeals. Any interested person may appeal an Administrative Officer decision regarding a permitted use by filing an appeal in accordance with Section 1702.

6. Expiration of Approval. Approval of an accessory apartment shall expire when the Zoning Permit expires.

J. Approval of Activities Regarding Non-conforming Uses

1. Review Requirement. Any use of land or buildings lawfully existing on the effective date of this Code which is not allowable under this Code in the District where it is located shall be considered a non-conforming use and may be maintained subject to the provision of Chapter 8.

2. Appeals:

(a) Any interested person may appeal a Staff decision regarding a non-conforming use to the Development Review Board in accordance with the provisions of Section 1702 below.

(b) Any interested person may appeal a Development Review Board decision regarding a non-conforming use in accordance with the provisions of Section 1706 below.

3. Expiration of Approval. Approvals regarding non-conforming uses shall expire if not implemented within one (1) year from the date of approval.

K. Approval of Activities Regarding Non-complying Structures

1. Review Requirement. Any structure, existing on the effective date of this Code, which does not conform to the dimensional requirements of this Code shall be considered as a non-complying structure. Such structure may continue to be occupied, subject to the provisions of Chapter 8.

2. Appeals. Any interested person may appeal a decision regarding a non-complying structure as specified in Chapter 17.

3. Expiration of Approval. Approvals regarding non-complying structures shall expire if a Zoning Permit application is not received within one (1) year from the date of approval.

L. Approval of Development Activities on Existing Small Lots

Any lot that is legally subdivided, is in individual and separate and nonaffiliated ownership from surrounding properties, and is in existence on the date of enactment of this bylaw, may be developed for the purposes permitted in the district in which it is located, even though the small lot no longer conforms to minimum lot size requirements of the new bylaw. This provision shall not exempt development on such lots from other provisions of this Code.

M. Planned Unit Development (PUD)

The objective of the Planned Unit Development (PUD) is to permit flexibility in the application of land development regulations to encourage compact, pedestrian-oriented development and redevelopment, and to implement the policies of the municipal plan, such as the provision of affordable housing. If flexibility is needed to achieve these objectives, the City may approve waivers in accordance with 723.B. In this way the City may grant the developer a desirable flexibility and at the same time not only protect, but enhance the welfare of the residents and other users of a development as well as the rest of the community. Planned Unit Developments may be used to facilitate development of areas designated for residential, mixed, or single use to achieve the objective stated herein.

1. Activities involving Planned Unit Development shall be reviewed in accordance with this section. An application for a Planned Unit Development shall be submitted and reviewed in accordance with the procedures of Section 511. A proposal for a Planned Unit Development must also be reviewed under Section 723.

2. Review Standards. An application for a Planned Unit Development shall be reviewed under the applicable standards of Section 723.

3. Expiration of approval. An approval for a Planned Unit Development shall expire in accordance with terms set forth in the approval.

4. Appeal. Any interested person may appeal a decision of the Development

Review Board regarding a Planned Unit Development in accordance with the procedures set forth in Section 1707.

N. Telecommunications

1. Authority. Pursuant to 24 V.S.A. § 4414(12), the Development Review Board shall have the authority to regulate construction, alteration, development, decommissioning and dismantling of Wireless Telecommunication Facilities in the City of Essex Junction.

2. Purpose. The purpose of this bylaw is to promote the public health, safety, welfare, and convenience of the residents of the City of Essex Junction, while accommodating the telecommunication needs of the City's residents.

3. Consistency with Federal and State Law; Severability. This bylaw is intended to be consistent with the Telecommunications Act of 1996 and Title 24, Chapter 117 of Vermont Statutes Annotated. If any section of this bylaw is held by a court of competent jurisdiction to be invalid, such finding shall not invalidate any other part of this bylaw.

4. Permit Application Requirements. In addition to information otherwise required in the City of Essex Junction's Land Development Code, applicants shall include the following supplemental information:

Every Wireless Telecommunication Facility and Small Scale Facility permit application shall include:

(a) The applicant's legal name, address and telephone number. If the applicant is not a natural person, the applicant shall provide the state in which it is incorporated and the name and address of its resident agent.

(b) The name, title, address and telephone number of the person to whom correspondence concerning the application should be sent.

(c) The name, address and telephone number of the owner or lessee of the property on which the Wireless Telecommunication Facility will be located.

A Small Scale Facility permit application shall also include:

A final site and building plan and, where applicable, a report indicating the structure's suitability for the telecommunications facility, and that the proposed method of affixing the antenna or other device to the structure complies with standard engineering practices. Complete details of all fixtures and couplings and the exact point(s) of attachment shall be indicated.

Every Wireless Telecommunications Facility permit application shall include:

(a) The names and addresses of all adjoining property owners. Adjoining property owners shall be determined without regard to any public Right-of-way.

(b) A vicinity map showing the entire vicinity within a thousand (1000) foot radius of the Facility, including the location of any tower, topography, public and private roads and driveways, buildings and structures, utilities, water bodies, wetlands, landscape features, historic sites and necessary wildlife habitats. It shall indicate the property lines of the proposed Facility site parcel and all

easements or rights of way needed for access from a public way to the Facility.

(c) The location of the Facility on a USGS Topographic Map or a GIS-generated map compatible with Vermont Center for Geographic Information (VCGI) standards and encompassing the area within at least a two (2) mile radius of the proposed tower site.

(d) Elevations and proposed site plans of the Facility showing all facades and indicating all exterior materials and colors of towers, buildings and equipment, as well as all landscaping, utility wires, guy wires and screening. (All plans shall be drawn at a minimum scale of one (1) inch = fifty (50) feet).

(e) In the case of a site that is forested, the approximate average elevation of the existing vegetation within fifty (50) feet of any tower base.

(f) Construction sequence and time schedule for completion of each phase of the entire project.

(g) A report from a qualified engineer that:

(i) Describes any tower's design and elevation,

(ii) Documents the elevation above grade for all proposed mounting positions for antennas to be collocated on a tower and the minimum distances between antennas,

(iii) Describes a tower's capacity, including the number, elevation and types of antennas that the tower is proposed to accommodate.

(iv) In the case of new Facilities, demonstrates that existing towers and structures within five (5) miles of the site cannot reasonably be modified to provide adequate coverage and adequate capacity to the community.

(v) Describes potential changes or additions to existing structures or towers that would enable them to provide adequate coverage.

(vi) Describes the output frequency, number of channels and the power output per channel for each antenna. In the alternative, a coverage map may be provided.

(vii) Demonstrates the Facility's compliance with the standards set forth in this bylaw or other applicable standards.

(viii) Provides proof that at the proposed Facility site the applicant will be in compliance with all FCC regulations, standards and requirements, and includes a statement that the applicant commits to continue to maintain compliance with all FCC regulations, standards and requirements for radio frequency radiation (RFR).

(ix) Includes such other information as determined by the Development Review Board to evaluate the application.

(h) A letter of intent committing the Facility owner and its successors to permit shared use of any tower if the additional users agree to meet reasonable terms and conditions for shared use, including compliance with all applicable FCC regulations, standards and requirements and the provisions of this bylaw and all other applicable laws.

(i) In the case of an application for additional antennas or other equipment to be installed on an existing Facility, a copy of the executed contract with the owner of

the existing structure.

(j) To the extent required by the National Environmental Policy Act (NEPA) and as administered by the FCC, a complete Environmental Assessment (EA) draft or final report describing the probable impacts of the Facility, or a written statement by the applicant that an EA is not required for the facility.

5. Permit Required. Wireless Telecommunication Facilities may be permitted or conditional uses as indicated in the Use Chart in Section 622. No installation or construction of, or significant addition or modification to, any Wireless Telecommunication Facility shall commence until a permit has been issued by the Administrative Officer. Site Plan review by the Development Review Board is required for all Wireless Telecommunications Facilities, including Small Scale Facilities not exempted below.

6. Exemptions. No permit shall be required for a Wireless Telecommunication Facility or Small Scale Facility that:

(a) Is used exclusively for municipal radio dispatch service or emergency radio dispatch service.

(b) Is used solely for amateur radio activities as long as it is on the site of the business or home being served and is less than thirty six (36) feet in height, measured from grade.

(c) Antennae and satellite dishes that do not exceed 1 meter in diameter or height. The height shall be measured from grade if mounted on the ground or from the top of the structure if mounted on an existing structure.

7. Independent Consultants. Upon submission of an application for a Wireless Telecommunication Facility permit, the Development Review Board may retain independent consultants whose services shall be paid for by the applicant. These consultants shall be qualified professionals in telecommunications engineering, structural engineering, monitoring of electromagnetic fields and such other fields as determined by the Development Review Board. The consultant(s) shall work at the Development Review Board's direction and shall provide the Development Review Board reports and assistance, as the Development Review Board deems necessary to review an application.

O. Master Plans

1. Purpose. To guide long-term development on larger properties and allow for public input early in the process as a means to limit impacts resulting from incremental planning and development. The master plan process is an opportunity to address the long-term vision and conceptual design for development of buildings, land uses, infrastructure and conservation/preservation through integrative design. Master plans are an opportunity to discuss early design concepts with the Development Review Board prior to the formal permitting process. A formal approval of the Master Plan by the Development Review Board is not a guarantee that the development moving forward will gain Development Review Board approval, rather it is an indication that the general concept of the Master Plan is in keeping with the City's vision for the District moving forward. The Master Plan shall address the following:

(a) Land uses;
(b) Land subdivision;
(c) Streets, parking, and open space;
(d) Preservation of significant natural, historical or cultural features;
(e) Stormwater management;
(f) Urban form and urban design including the relationships between buildings, streets, open spaces, and parking areas;
(g) Connections to adjacent areas and networks;
(h) Significant natural and/or historic features; and
(i) Development phasing.

2. Review Procedures. All Master Plans shall be reviewed by the Development Review Board at a public meeting. Approval of a master plan is not a guarantee of future development approvals on the site.

3. Submittal Requirements:
(a) A map in plan view that addresses the items listed in Section 502.O.1.
(b) Supporting documentation to include:
(i) Land uses by gross building square footage
(ii) Total number of units by type and overall density
(iii) Amount of open space and uses
(iv) Building typologies
(v) Amount and location of parking
(vi) Vignettes, sketches, 3D models or other visual media to assist in representing the master plan proposal (optional or as required by the Development Review Board).
(vii) A statement describing the design intent for the master plan including the important physical relationships that influenced the proposed design including, but not limited to, natural features, connections, urban form, views, nodes, public transit, access and pedestrian mobility and connection to adjacent areas.

SECTION 503: SUBDIVISIONS

A. Purpose
To provide a mechanism for the timely review of applications for subdivision approval and to ensure that the development standards of this Code are met.

B. Classification
Staff shall review each subdivision application and classify it as a lot consolidation, minor subdivision or major subdivision. An applicant may request that the Development Review Board review the classification as determined by Staff. The classification criteria are as follows:

1. Lot Consolidation or Boundary Adjustment. An application for a lot consolidation or boundary adjustment shall be reviewed and approved by staff.

2. Minor Subdivision. A minor subdivision includes the platting of five (5) or fewer

lots or minor adjustments to the lot lines of three (3) or more lots. A minor subdivision shall require Sketch Plan and Final Plat approval.

3. Major Subdivision. A major subdivision is any proposal not classified as a Consolidation or Minor Subdivision. A major subdivision requires approval of a Sketch Plan, Preliminary Plat, and Final Plat.

4. Footprint Lot. A footprint lot shall serve as a form of ownership and conveyance. A footprint lot is not recognized for the purposes of zoning as a separate lot with regard to lot coverage maximums, setbacks, and frontage and shall not be reviewed pursuant to the subdivision regulations as a subdivision of property. A project creating footprint lots may otherwise still require review under other sections of the Land Development Code, such as the PUD regulations, for example, based on the specifics of the proposal.

C. Public Meetings/Public Hearings

1. An application for Sketch Plan Approval shall be considered by the Development Review Board at a Public Meeting.

2. Applications for Preliminary Plat or Final Plat approval shall be considered by the Development Review Board at a public hearing.

3. The applicant, or duly authorized agent, is encouraged to attend all meetings and hearings for review of the application. The Development Review Board may delay action on any application if the owner/agent fails to attend scheduled meetings or hearings.

D. Waivers

Any request to waive or alter any requirement of this Code shall be made in writing at the time of application.

E. General Standards of Review

The Development Review Board shall generally review all applications for neighborhood compatibility, effect on adjoining undeveloped land, public infrastructure impact and the general public health, safety, and welfare.

F. Concurrent Reviews

An application for Subdivision approval may be reviewed concurrently with an application for Site Plan, Planned Development, or Conditional Use approval. Concurrent review does not ensure that the applications will not be denied.

G. Effects of Approval or Denial

Final approval of a subdivision authorizes the applicant to apply for any development permit required by this Code.

H. Application Submittal Requirements

Applications submitted for approval shall contain the material specified below. In addition, any request to alter or waive any Code requirements shall be included in writing as a part of the application.

1. Lot Division or Lot Consolidation. An application for a Lot Division or Lot Consolidation shall include the following:

(a) Written request to waive or alter any requirement of this Code, if any.
(b) A survey certified by a surveyor licensed to practice in the State of Vermont.
(c) The location of existing and proposed lot lines.
(d) Certification and signature of the owner(s) of record.
(e) The location of all existing or proposed structures and distance between structures and lot lines.

2. Boundary Adjustments. An application for approval of a Boundary Adjustment shall include two reproducible drawings suitable for filing in the land records which shall meet the requirements of 27 VSA 1403 and two copies of a survey prepared by a licensed surveyor which depicts the two lots with the adjusted boundary and the following endorsements:

"Boundary Adjustments, approved by the City of Essex Junction
on the____ day of _____, 20__, meets all City Code
requirements. Signed this _____ day of _____, 20__
By_____, Title_____

3. Sketch Plan. An application for Sketch Plan approval shall be submitted prior to submission of a Preliminary Plat. The Development Review Board shall review the sketch plan to determine general compliance with this Code and good urban design techniques. These techniques include but are not limited to designs that do the following: maximize open space and connectivity, are economically viable in the long term, are cohesive with existing surroundings, are connected to the landscape, and are environmentally conscious. The Development Review Board shall prepare written findings which clearly express the results of their review of an application. Sketch Plan approval authorizes the applicant to proceed with the Subdivision process. However, Sketch Plan approval does not guarantee Preliminary or Final Plat approval, if further investigation reveals that engineering or design standards cannot be met. An application for Sketch Plan approval shall include the following:

(a) A survey of the subdivision site certified by a surveyor licensed to practice in the State of Vermont.
(b) Approximate location of existing and proposed lot lines and area of the property to be subdivided.
(c) Name, address, and signature of the owner of record.
(d) The general location of all existing or proposed structures and distance between structures and lot lines.
(e) General description of proposed engineering techniques for stormwater management using AutoCAD for input and output calculation and phosphorus removal calculation.
(f) Proposed method to provide water and sewer service.
(g) Approximate location of existing and/or proposed easements.
(h) Approximate location of any land proposed to be donated to the City.

(i) Approximate location of any land to be held in common ownership.

(j) Proposed method to ensure maintenance of any common improvements or lands in common ownership.

(k) General description and proposed methodology for analyzing traffic impact if deemed necessary by the Development Review Board.

(l) Other information as necessary to fully inform the Development Review Board of the extent of the development.

(m) Whenever a proposed subdivision is adjacent to a State highway, the application for subdivision approval shall include a letter from the Agency of Transportation confirming that the Agency has reviewed the proposed subdivision and determined whether a permit is required under 19 V.S.A. § 1111.

4. Preliminary Plat. Approval of a Preliminary Plat authorizes the applicant to make application for Final Plat approval. The Development Review Board shall prepare written findings which identify any conditions of approval or other recommendations. The Development Review Board shall issue its decision and findings within forty-five (45) days of the completion of the hearing at which it was reviewed unless the application was continued. The findings may require submittal of additional information to the Development Review Board or Staff prior to acceptance of an application for Final Plat approval. An application for Preliminary Plat approval shall include the proposed plat and a written statement providing any required information which is not on the proposed plat. At a minimum, the following information is required.

(a) A vicinity map which shows the site in relation to surrounding property and adjacent zoning/land use.

(b) The location and boundary lines of the subdivision and all proposed lots and a map or statement describing contiguous property in which the owner has an interest.

(c) The name, location and width of existing or proposed streets or right of ways within and contiguous to the proposal. For proposed streets, the application shall include plan, profile and grading plan and clear identification of those streets proposed to be turned over to the Municipality as public infrastructure. Draft legal documents (which may include an irrevocable offer of dedication, easement deed, quit claim or warranty deeds) shall be submitted for proposed public infrastructure.

(d) The location and size of sewers, water mains, storm drains, and other infrastructure within or contiguous to the proposal. The location of any above ground utilities or facilities including fire hydrants. Provide clear identification of the infrastructure proposed to be turned over to the Municipality as public infrastructure. Draft legal documents (which may include an irrevocable offer of dedication, easement deed, quit claim or warranty deeds) shall be submitted for proposed public infrastructure. The applicant shall submit all calculations supporting the storm water system design and fire flow requirements.

(e) The location and width of all proposed and existing easements.

(f) The location and type of lighting fixtures.

(g) Topographic survey with contour at no more than two (2) foot intervals by a

surveyor or engineer licensed to practice in the State of Vermont.

(h) The approximate location of existing trees, or tree groupings, excessive slopes, wetlands, waterways and significant natural features within 200 feet of the proposed development.

(i) The location and dimensions of all lots and the square footage of each.

(j) The location and dimensions of parks or open land under common ownership or land proposed for dedication to the City.

(k) The location and dimensions of any buffer or screening area, including the location and height of proposed fencing and/or hedges.

(l) The location, dimensions, and construction material of all sidewalks, pedestrian ways, and bikepaths.

(m) Identification of any proposed development phasing recommended or required by Sketch Plan approval.

(n) Traffic impact study if required by the Development Review Board.

(o) Written description of the proposed design concept.

(p) Other material as required by the Development Review Board as a condition of Sketch Plan approval.

(q) Whenever a proposed subdivision is adjacent to a State highway, the application for subdivision approval shall include a letter from the Agency of Transportation confirming that the Agency has reviewed the proposed subdivision and determined whether a permit is required under 19 V.S.A. § 1111. If the Agency determines that a permit for the proposed subdivision is required under 19 V.S.A. § 1111, then the letter from the Agency shall set out any conditions that the Agency proposes to attach to the permit required under 19 V.S.A. § 1111.

5. Final Plat. No Final Plat shall be submitted which is not in substantial compliance with the Preliminary Plat and any conditions of approval of the Preliminary Plat. The Development Review Board shall, within forty-five (45) days of the close of the hearing, approve, modify and approve or disapprove such plat, unless the application was continued. The grounds for disapproval and/or any conditions to approval shall be included in a written notice of decision. A Final Plat shall conform to all Public Works Specifications and shall include the following:

(a) One (1) reproducible drawing which meets the requirements of 27 VSA 1403 which is suitable for recording in the land records. The scale shall be of sufficient size to show all detail and shall be stated and graphically illustrated on every sheet depicting any of the lands subdivided. A north arrow shall appear on each sheet.

(b) The name of the subdivision shall appear on each sheet. All streets shall be clearly named.

(c) Each plat shall be surveyed with all property boundaries clearly marked. Each lot shall be clearly numbered and all property boundaries clearly delineated.

(d) The property description sufficiently complete so that, without reference to the plat, the starting point and all boundaries of the subdivision can be located.

(e) Permanent Control points shall be shown on the Plat and tied to the Vermont Coordinate system NAD83 as defined in VSA1, Chapter 17, Section 671-679. The surveyor shall certify that the Permanent Control points have been set and the date that they were set.

(f) The final plat shall be submitted in digital form in one of the following options in order of preference:

i. GIS geospatial data. Either a geodatabase or shapefile format. Must be in Vermont State Plane Meters, NAD83 (NSRS or most current).

ii. If sub-part i is not possible, the plat shall be submitted as Coordinated CAD data in Vermont State Plane Coordinates, US Survey Feet, Grid Zone 4400, NAD 83(2011) epoch 2010.0, NAVD 88 (geoid12b).

iii. If sub-parts i and ii are not possible, supply 3 values of State Plane Coordinates on the plan(s).

(g) Location, width, and names of all streets, waterways, or other right of ways shall be shown.

(h) Location and width of all easements shall be shown.

(i) All lot and subdivision lines shall clearly show dimensions, curvature and radii. Curvilinear lots shall show the radii, arc distances, and central angles or radii, chord, and chord bearing, or both. Radial lines will be so designated. Direction or non-radial lines shall be indicated.

(j) The centerline of all streets shall be shown with distance, angles and bearings.

(k) Any areas dedicated or donated to the City shall be clearly designated with distance, angles and bearings.

(l) A licensed land surveyor shall include a certification signed and sealed on the plat.

6. Construction Drawings. Construction drawings shall be submitted with all Final Plat applications. The construction drawings shall include engineering details of all improvements to the property. Sufficient detail shall be provided to allow review and inspection of the subdivision during construction. The City shall have the authority to request additional details as necessary to review the plans for conformance to this Code, accepted engineering practice, and other standards or guidelines which may hereafter be adopted.

7. As-Built Plans. As-built Plans shall be submitted within six (6) months of the completion of the subdivision or phase thereof. Final inspection shall not occur prior to receipt of as-builts. The City shall not accept any street or other public improvements for maintenance prior to submittal of as-built plans. All final deeds and easements needed for transference of roads and/or infrastructure to the municipality shall be submitted to the Community Development Department, with copies for the City Engineer, Public Works Superintendent, and/or Water Quality Superintendent as applicable for review and consideration of processing to the City Council for acceptance City Council The applicant shall submit one set of reproducible drawings suitable for

recording in the land records.

I. Time Limitations

1. Sketch Plan. Within one (1) year of approval of a Sketch Plan, a Preliminary Plat shall be submitted for review by the Development Review Board. If application for a time extension is received prior to the Preliminary Plat submittal date, staff may approve a time extension not to exceed six (6) months.

2. Preliminary Plat. Within one (1) year of approval, a Final Plat shall be submitted for review by the Development Review Board. If application for time extension is received prior to the Final Plat submittal date, the Development Review Board may approve a time extension not to exceed six (6) months. Failure to submit a Final Plat or request a time extension shall negate Sketch Plan approval.

3. Final plat. Construction shall commence on any Final Plat approved within two (2) years of approval. Failure to initiate construction shall negate Final Plat approval and the applicant shall reapply for Subdivision approval. The Development Review Board may grant an extension of up to two (2) years if the applicant demonstrates diligent pursuit of financing or other permits and demonstrates inability to control the delay.

J. Consolidated Applications

Applicants may request that the Development Review Board consider applications for Sketch Plan Approval, Preliminary Plat approval and/or Final Plat Approval simultaneously with a single application. The Development Review Board, however, may determine that separate reviews are required.

K. Filing of Approved Subdivision Final Plat

The approval of a final Subdivision Plat shall expire in one hundred and eighty (180) days, unless the plat has been duly recorded by the applicant with the office of the City Clerk with a copy provided to the Town Assessor. The administrative officer may extend the date for filing the plat by an additional 90 days, if final local or State permits or approvals are still pending. No plat shall be recorded with the City Clerk until it has been approved by the Development Review Board, and such approval is endorsed in writing on such plat by the Development Review Board Chair or Clerk. Endorsement shall not take place until all required plats, construction drawings and supporting documents have been submitted to Staff and determined to be complete and accurate. If submittals are not complete and accurate within one hundred and eighty (180) days, the subdivision approval shall be void and the application shall be resubmitted for final approval.

L. Plat Void if Revised after Approval

No changes, erasure, modification, or revision shall be made on any subdivision plat after approval has been given by the Development Review Board and endorsed in writing on the plat, unless said plat is first resubmitted to the Development Review Board for approval of such modifications after public hearing with the exception of boundary adjustments pursuant to Section 503B. If such subdivision plat is recorded without complying with this requirement, the plat shall be considered null and void. Any change in a previously

approved and recorded subdivision plat shall be resubmitted for approval pursuant to this Code.

M. Appeals.

1. Any interested person may appeal a Development Review Board decision regarding a subdivision by filing an appeal in accordance with the procedures of Section 1707 below.
2. Any interested person may appeal a Staff decision classifying a subdivision by appealing to the Development Review Board pursuant to Section 1704 below.

SECTION 504: APPROVAL OF ACTIVITIES INVOLVING PUBLIC SEWERS

A. Review Requirement

Activities involving uncovering or making any connections with or openings into, or using, altering, or disturbing any public sewer or appurtenance thereof, or proposing a new discharge into a public sewer or a substantial change in the volume or character of pollutants that are being discharged into such sewer shall require review in accordance with the procedures of this section.

B. Review Standards

Activities reviewed under this section shall comply with the standards set forth in Chapter 11.

C. Application Requirements

Applications for the connection of any use or structure shall require a plan prepared by a licensed potable water and wastewater system designer in accordance with the State of Vermont Environmental Protection Rules, Chapter 1, Wastewater System and Potable Water Supply Rules, described in Subchapter 7 - Designer Licensing (https://dec.vermont.gov/water/licensed-designers).

D. Review Procedures

Staff shall review all applications for completeness within three (3) days of receipt. The Public Works Superintendent and Water Quality Superintendent or their designee shall review and approve, approve with conditions, or deny within ten (10) days.

E. Appeals

Any interested party may appeal a decision of the Superintendent to the City Council in accordance with the provisions of Section 1705.

F. Expiration of Approvals

Approvals and capacity shall expire one (1) year from the date permits are issued unless an extension is requested.

SECTION 505: APPROVAL OF ACTIVITIES INVOLVING PRIVATE SEWERS

A. Review Requirement
Activities involving construction of a private sewage disposal system or private sewer or connection to any such system shall require review in accordance with the procedures of this section.

B. Review Standards
Activities reviewed under this section shall comply with the standards set forth in Chapter 11.

C. Review Procedures
All applications for private sewers shall be reviewed by the Development Review Board and approved by the City Council.

D. Appeals
Any interested party may appeal a decision regarding a private sewer as specified in Chapter 17.

E. Expiration of Approvals
Approvals and capacity shall expire one (1) year from the date permits are issued unless an extension is requested.

SECTION 506: APPROVAL OF WAIVERS TO STANDARDS OF SECTION 718.B

A. Review Required
Activities involving the conduct of a circus, carnival, menagerie, entertainment, concert, exhibition or similar activity shall be reviewed in accordance with the procedures of this section.

B. Review Standards
Activities reviewed under this section shall comply with the standards set forth in this Code.

C. Review Procedures
Staff shall review all applications to determine necessity of waivers under the provisions of this Code.

D. Appeals/Waivers
The City Council shall review all waiver requests. Waivers may be granted for one event or for multiple events. The City Council may authorize waivers for the same activity on one or more occasions, or for one or more years.

1. Upon written request, the City Council may grant a waiver from the provisions of Section 718.B for any activity which has received approval required herein, and:

(a) Is a type of activity which cannot comply with the standards of this Code.
(b) Can not occur at a time when the activity would comply with the standards of this Code.
(c) Is a non-routine activity, which is proposed to occur for a specified period of time.

2. When granting a waiver under this Section, the City Council may attach reasonable conditions to minimize the impact of the waiver on adjoining properties. Such conditions may include but are not limited to:
(a) The time in which the activity may occur;
(b) Maximum sound limits, which may not be exceeded;
(c) The posting of a bond to insure compliance with the terms of the waiver; and
(d) Requirements to use particular equipment or procedures to minimize sound.
(e) Hours of operation.

E. Appeals
An individual who proposes an activity, which Staff determines will result in sound in excess of the standards of Section 718.B may appeal such decision to the City Council in accordance with the procedures of Section 1705.

SECTION 507: APPROVAL OF ACTIVITIES INVOLVING PUBLIC WATER LINES

A. Review Requirement
Activities involving uncovering or making any connections with or openings into, or using, altering, or disturbing any public water line or appurtenance thereof shall require review in accordance with the procedures of this section.

B. Review Procedures and Standards
The Public Works Superintendent shall review and approve, approve with conditions, or deny within ten (10) days an application to construct or connect to a public water line. The Superintendent shall review an application under the standards set forth in Chapter 14.

C. Expiration of Approvals.
Approvals and capacity shall expire one (1) year from the date permits are issued unless an extension is requested.

D. Appeals
An applicant for approval under this Section may appeal a decision of the Public Works Superintendent to the City Council in accordance with the provisions of Section 1705.

SECTION 508: APPROVAL OF ACTIVITIES INVOLVING PRIVATE WATER SUPPLY

A. Review Requirement
Activities involving use of a private water supply or construction of or making any connections with or openings into, or using, or altering any private water line shall require

review in accordance with the procedures of this Section.

B. Review Procedures and Standards

1. An application to establish a private water supply shall be submitted to the City Council for its review at a regular or special meeting. The City Council may approve the application if it meets the standards of Section 1416. The decision of the City Council shall be final.

2. The Public Works Superintendent shall review and approve, approve with conditions, or deny within ten (10) days an application to construct or connect to a private water line. The Director shall review an application under the standards set forth in Section 1416.

C. Expiration of Approvals

Approvals shall expire one (1) year from the date permits are issued.

D. Appeals

An applicant for approval of a private water line under this Section may appeal a decision of the Public Works Superintendent to the City Council in accordance with the provisions of Section 1705.

SECTION 509: ACTIVITIES INVOLVING ACCESS TO PUBLIC ROADS

A. Review Required

Activities involving opening, constructing, or reconstructing any driveway, entrance, or approach into a public road Right-of-way; obstructing, altering, or changing a ditch, culvert, or drainage course that drains a public roadway; depositing material or placing improvements in a public Right-of-way; or altering lands adjacent to a public Right-of-way to divert surface waters onto the Right-of-way shall require review in accordance with the procedures of this Section.

B. Review Procedures and Standards

1. Except as provided in subsection 2, below, an application for any activity regulated under this Section shall be submitted to the City Council for its review at a regular or special meeting. The City Council shall review the application under the standard set forth in Section 705. The decision of the City Council shall be final.

2. City Council approval for any activity regulated under this Section shall not be required if such activity is reviewed by Staff, or the Development Review Board under the provisions of Chapters 6, 7 or 9 of this Code.

3. The City Council may revoke or modify any approval authorizing any activity regulated under this Section after sending written notice of intent to take such action to any affected property owner. The City Council shall consider such action at a regular or special meeting of the City Council and provide any affected property owner notice of such meeting and an opportunity to present information at such meeting. The City Council shall review such proposed action under the standards set forth in Section 705.

The City Council shall render its decision in writing, which decision shall be final. The City Council shall send a copy of the decision to any affected property owner.

C. Application Requirements.

1. A scale drawing showing existing and proposed curb cuts including dimensions and radii.
2. A statement describing the purpose of the proposed curb cut changes.
3. Name and address and telephone number of applicant and any professional consultants.

D. Expiration of Approvals

Approvals shall expire one (1) year from the date of approval.

SECTION 510: ISSUANCE OF CERTIFICATES OF OCCUPANCY

A. Purpose

To provide a mechanism for Staff review of all applications for Certificates of Occupancy to ensure that all Code requirements and development conditions are satisfied prior to occupancy of any structure.

B. Requirement for Certificate of Occupancy

No building hereafter erected, and no building hereafter altered, which is vacant during the process of alteration, shall be occupied or used, in part or in whole, until a Certificate of Occupancy has been issued certifying that the building conforms to all approved plans and specifications, and to all provisions of this Code. If a previously occupied building undergoes a change of use, a new Certificate of Occupancy must be reviewed and issued by Staff.

C. Temporary Certificate of Occupancy

Upon request of the owner or his agent, a Temporary Certificate of Occupancy may be issued for occupancy of part of a building, provided that such temporary occupancy would not in any way jeopardize life or property.

D. Requirements

Prior to issuance of a Certificate of Occupancy, the owner or his agent shall provide Staff with evidence that a water meter has been installed (if needed) and that the building conforms to all approved plans and specifications, and to all provisions of this Code. Staff may inspect the building to verify that all requirements are satisfied.

SECTION 511: GENERAL REVIEW PROCEDURES FOR PLANNED UNIT DEVELOPMENTS

A. Purpose

To provide a procedure for the timely and efficient review by the Development Review Board of any proposals for Planned Unit Developments. Planned Unit Development review

is intended to combine subdivision and site plan review into a unified process. This Section is intended to supplement the procedures set forth in Section 502 above and shall be reviewed under the applicable standards of Section 723.

B. Review Requirements and Review Standards

With the exception of applications for Exposition Center PUD's, the review of applications for a Planned Unit Development approval shall include:

1. For major applications review of a Conceptual Plan and review of a Final Development Plan when the proposed development includes six (6) or more units. Review of a Preliminary Development Plan between Conceptual Plan review and Final Development Plan submittal is optional but recommended.
2. For minor applications review of a Conceptual Plan and review of a Final Development Plan when the proposed development includes less than six (6) units.
3. Site Plan Approval where applicable. All applicable site plan information as outlined in Section 502.F shall be submitted with all final development plans.

C. Conceptual Plan

A Conceptual Plan review is required to discuss initial project feasibility and to give the applicant the right to proceed. Detailed engineering studies are not required but sufficient data shall be submitted to enable the Development Review Board to review the merits of the proposal.

1. Review of a Conceptual Plan shall require a public hearing.
2. The Development Review Board may approve or deny a Conceptual Plan, and may make suggestions to be included when the Preliminary or Final Development Plan is prepared.
3. Approval of a Conceptual Plan authorizes the applicant to proceed to the next steps of the approval process, but does not commit the Development Review Board to further approvals.
4. Submittal requirements. The Conceptual Plan application shall include sufficient information to enable the Development Review Board to review the merits of the application and to determine that all Code standards will be met. At a minimum, the submittal shall include:

(a) The project name, address and legal description; name, address and telephone number of the developer and project design professionals.

(b) The approximate location of all proposed land uses including the number of dwelling units and/or the number, type and typical square footage of non-residential buildings, and total square footage of the project.

(c) The proposed height and number of stories of each building.

(d) A sketch of a typical structure.

(e) The approximate location of proposed roads, parking areas, sidewalks, bikeways, fire lanes and other proposed circulation elements and patterns.

(f) A landscape concept showing typical planting schemes, types of planting materials and general locations of major landscaping items such as berms, ponds, retaining walls or other man-made improvements.

(g) The approximate location and size of proposed curb cuts on public or private streets, and the size and type of all interior curb cuts.
(h) The approximate location and size of all common improvements, common open space and lands to be dedicated to public ownership.
(i) An estimate or projected use of public infrastructure, including a preliminary statement regarding traffic, sewer and water demand impacts.
(j) Information on surrounding properties, including land uses, zoning, ownership and traffic patterns.
(k) The height, size, location and typical sketches of proposed signs and fencing, if any.
(l) A preliminary analysis of drainage proposals, including a topographical map of the project area.
(m) An indication of proposed setbacks and minimum distances between proposed structures.
(n) A written request for any waivers to any standards contained in this Code, along with a justification for the request, in accordance with Section 723.B.
(o) Any other information deemed pertinent to the review of the specific Conceptual Plan.

5. Preliminary Development Plan. Preliminary Development Plan approval is optional except where specifically required herein. All applicants for Planned Development approval are encouraged to seek Preliminary Development plan approval.

(a) Review of a Preliminary Development Plan by the Development Review Board does not require a Public Hearing.
(b) Approval of a Preliminary Development Plan authorizes application for Final Development Plan but does not commit the Development Review Board to final approval.
(c) Submittal Requirements.
(i) A statement indicating that the proposed Planned Development is in accord with previous approvals, as applicable.
(ii) A site plan, drawn to scale, and a boundary certified by a land surveyor licensed to practice in the State of Vermont. The site plan shall show the location of all improvements and the location and size of all infrastructure.
(iii) If the project is to include common open space or common improvements, provide specification of ownership and responsibility for maintenance of such commonly owned features.
(iv) The location and dimensions of all easements.
(v) Engineering reports may be required to show conformance with this Code.
(vi) A proposed phasing schedule, if required by the Development Review Board, and estimated construction period.
(vii) A detailed landscape plan by a licensed landscape architect shall specify the type, size, quantity and location of all plant materials, and a landscape cost estimate, existing and proposed.

(viii) A written request for any waivers to any standards contained in this Code, along with a justification for the request, in accordance with Section 723.B.

6. Final Development Plan. Final Development Plan approval is required for all proposed PUD projects.

(a) Approval of a Final Development Plan authorizes the applicant to proceed with applications for all other development permits.

(b) Review of a Final Development Plan shall require a Public Hearing.

(c) Submittal Requirements.

(i) All submittal requirements specified in this Code for a Preliminary Plan review.

(ii) A Final Plat, as applicable, and a phasing schedule as required by the Development Review Board.

(iii) A survey of the property prepared by a licensed Land Surveyor.

(iv) A topographic map showing final ground contours at two (2) foot maximum intervals.

(v) Architectural rendering of typical structures.

(vi) Final engineering designs for infrastructure or other improvements.

(vii) A statement certifying that the development meets all applicable provisions of this Code.

(viii) A written request for any waivers to any standards contained in this Code, along with a justification for the request, in accordance with Section 723.B.

(ix) Whenever a proposed development involves significant construction impact to the public right-of-way, a Temporary Traffic Control Plan that considers the safety and operational needs of all transportation modes.

(d) Each application shall be reviewed on an individual basis in accordance with the provisions of the District in which the property is located. The application must comply with the specific standards set forth in Chapter 6. In general, the Development Review Board shall consider the effects of the proposal on the surrounding neighborhood, public infrastructure and potential development of adjoining property.

(e) Conditions. The Development Review Board may place conditions on any approval as necessary to ensure quality development and to limit potential negative effects of the proposal. A Planned Development may be approved in phases and may require construction within a specified time frame. Conditions shall be in accordance with the District within which the project is located and specific standards herein.

7. Amendment Procedures. Applications may be submitted to amend an approved Planned Development. Staff shall review any application and classify the proposal as follows:

(a) Major Amendment. A major amendment requires submittal of a new Conceptual Plan and review by the Development Review Board at a Public Hearing. The following changes at any stage of a Planned Development

approval, or following approval, constitute major amendments.

(i) Any change in the proposed land use or uses which would require different standards of review, or substantial change in occupancy of commercial uses which would alter traffic and parking needs or building design.

(ii) Any change in the street pattern which would impact adjoining streets.

(iii) Any increase in overall density or intensity of use within the Planned Development if that increase exceeds:

(aa) Ten (10) percent of the approved number of dwelling units or ten (10) dwelling units, whichever is less;

(bb) Ten (10) percent of the approved square footage or two thousand (2,000) square feet for commercial buildings, whichever is less;

(cc) Any other proposed changes, which Staff determines will substantially alter the design or negate the intent of the Plan as approved by the Development Review Board.

(b) Minor Amendment. A minor amendment requires review by the Development Review Board at a public meeting unless the proposed amendment alters an approved subdivision in which case a public hearing shall be required. The following changes constitute minor amendment.

(i) Any increase in density or intensity which do not qualify as a major amendment.

(ii) A decrease in setbacks beyond what is required for the district in which the project is located.

(iii) An increase in height or number of stories of one or more buildings.

(iv) Minor changes in the approved street pattern.

(v) Any decrease in the size of designated open spaces or recreation areas.

(vi) Any decrease in the number of parking spaces or loading/unloading spaces.

(vii) Any decrease in the amount of landscaping to be provided.

(viii) Any change in the phasing plan.

(ix) Any other change which Staff determines to not be either a major amendment or a minimal amendment.

(c) Minimal Amendment. Minimal amendments shall be reviewed and approved by Staff. The following changes constitute minimal amendments.

(i) Any reduction in density or intensity of use.

(ii) Any changes in setbacks, which do not violate the standards of the District in which the project is located.

(iii) Any changes in the location of landscaping, fencing, signage or sidewalks, or other changes which Staff determines to be insignificant.

(iv) Any changes in land uses which do not impact parking or circulation patterns.

(v) Any minor additions that do not add more than five hundred (500) square feet to any structure and which do not significantly alter the architectural appearance of the project.

SECTION 512: APPROVAL OF ACTIVITIES INVOLVING A NEW CONNECTION TO THE PUBLIC STORM DRAINAGE SYSTEM

A. Review Requirement

Activities involving the uncovering or making any connections with or openings into, or using, altering, or disturbing any public storm drainage system or appurtenance thereof, or proposing a new discharge or a substantial change in the volume into a public storm drainage system shall require review in accordance with the procedures of this section.

B. Review Standards

Activities reviewed under this section shall comply with the standards set forth in Section 713 of this Code.

C. Application Requirements

Development of any use, structure, filling activity or redevelopment activity that would increase stormwater runoff from the property shall be connected to the City stormwater system. The applicant shall provide the following information as relevant:

1. Pre-development and post-development drainage calculations for a two (2), ten (10), and twenty-five (25) year design stormwater flow
2. On-site drainage improvements and best management practices focused on Green Stormwater Infrastructure including, but not limited to: rain gardens, buffer strips, filter strips, grass swales, infiltration basins or other infiltrating practices. Permeable pavement systems, cisterns or other structural/ non-structural best management practices are also deemed appropriate for consideration.
3. A downstream analysis, if determined necessary by current or proposed local or state processes including, but not limited to, Total Maximum Daily Load ("TMDL").
4. Projects requiring a State stormwater permit may submit a copy of the issued State permit with supporting documentation and AutoCAD calculations for consideration of compliance with the requirement for a City stormwater management plan. Such properties may include properties greater than one-half (0.5) acre in size and industrial facilities regulated under the Multi Sector General Permit requirements (MSGP).
5. Projects requiring further review as determined by State issued watershed permitting or TMDL (if applicable) may require further improvement to mitigate stormwater flows as part of any related permits.

D. Review Procedures

Staff shall review all applications for completeness within three (3) days of receipt. The Public Works Superintendent or Water Quality Superintendent or their designee shall act on all applications within ten (10) days.

E. Appeals
Any interested party may appeal a decision regarding a public storm sewer connection as specified in Chapter 117 of Title 24.

F. Expiration of Approvals
Approvals shall expire one (1) year from the date permits are issued, if not implemented.

SECTION 513: APPROVAL OF ACTIVITIES INVOLVING THE CONSTRUCTION OF A STORMWATER SYSTEM

A. Review Requirement
Activities involving construction of a stormwater system other than the public storm drainage system, or connection to any such system, shall require review in accordance with the procedures of this section.

B. Review Standards
Activities reviewed under this section shall comply with the procedures set forth herein, and the standards in Section 713 of this Code.

C. Application Requirements.

1. Applications for activities involving the construction of a stormwater system must include a stormwater management plan indicating how the performance requirements and operation and maintenance requirements set forth in this Code will be met. The application shall also identify the legal entity to own and maintain the non-municipal portions of any stormwater system proposed.
2. Pre-development and post-development drainage calculations for a two (2), ten (10), and twenty-five (25) year design stormwater flow.
3. On-site drainage improvements and best management practices focused on Green Stormwater Infrastructure including, but not limited to: rain gardens, buffer strips, filter strips, grass swales, infiltration basins or other infiltrating practices. Permeable pavement systems, cisterns or other structural/ non-structural best management practices are also deemed appropriate for consideration.
4. A downstream analysis, if determined necessary by current or proposed local or state processes including, but not limited to, Total Maximum Daily Load ("TMDL").
5. Projects requiring a State stormwater permit may submit a copy of the issued State permit with supporting documentation including all data needed to document phosphorus loading and reduction based on watershed (on the VT DEC BMP Tracking Table spreadsheet). This will serve as evidence of compliance with the requirement for a City of Essex Junction stormwater management plan and phosphorus control plan.
6. Projects requiring further review as determined by State issued watershed permitting or TMDL (if applicable) may require further improvement to mitigate stormwater flows as part of any related permits.

D. Review Procedures
Staff shall review all applications for completeness within three (3) days of receipt. The Public Works Superintendent or Water Quality Superintendent or their designee shall act on all applications within ten (10) days.

E. Appeals
Any interested party may appeal a decision regarding construction of a stormwater system plan as specified in Chapter 117 of Title 24.

F. Permits for Stormwater Discharges Associated with Construction Activities
Under the National Pollutant Discharge Elimination System (NPDES), construction projects involving one (1) acre or more of land disturbance require a stormwater permit to discharge stormwater runoff from construction activities, as covered by Construction General Permit 3-9020, which is overseen by The Vermont Department of Environmental Conservation's Watershed Management Division.

G. Expiration of Approvals
Approvals shall expire one (1) year from the date permits are issued, if not implemented

SECTION 514: APPROVAL OF ACTIVITIES INVOLVING THE DISTURBANCE OF MORE THAN 0.5 ACRE OF LAND

A. Review Requirement
Activities involving clearing, grading, construction or land development/disturbance of more than half an acre of land (0.5) acre shall require review in accordance with the procedures of this section.

B. Review Standards
Activities reviewed under this section shall comply with the standards set forth in Section 713 of this Code. General requirements may be waived by the Public Works Superintendent or Water Quality Superintendent or their designee if the applicant conforms to the State of Vermont Best Site Management practices as outlined in: "The Low Risk Site Handbook for Erosion Prevention and Sediment Control" (as amended) or in the "Vermont Erosion Prevention and Sediment Control Field Guide" (as amended). The state guidelines are available at http://www.vtwaterquality.org/stormwater/htm/sw_cgp.htm.

C. Application Requirements.
1. Activities involving clearing, grading, construction or land development of land more than half an acre of land (0.5) acre must include an erosion and sediment control plan indicating compliance with the "Low Risk Site Handbook for Erosion Prevention and Sediment Control."
2. Additional erosion control stipulations may be required depending on the specific site conditions, such as the extent of disturbed land, proximity of water, percent slope and soil types.

D. Review Procedures
Staff shall review all applications for completeness within three (3) days of receipt. The Public Works Superintendent or Water Quality Superintendent shall act on all applications within ten (10) days.

E. Appeals
Any interested party may appeal a decision regarding an erosion and sediment control plan as specified in Chapter 117 of Title 24.

F. Expiration of Approvals
Approvals shall expire one (1) year from the date permits are issued, if not implemented.

SECTION 515: APPROVAL OF ACTIVITIES INVOLVING THE DISTURBANCE OF EQUAL TO OR GREATER THAN ONE (1) ACRE AND/OR THE CREATION OF MORE THAN 0.5 ACRE OF IMPERVIOUS SURFACE

A. Review Requirement
Activities involving clearing, grading, construction or land development of one (1) acre or more of land and/or creating a total resulting impervious surface equal to or greater than half an acre (0.5) acre shall require review in accordance with the procedures of the State of Vermont Construction General Permit 3-9020 and General Permit 3-9050 or other applicable state permits governing erosion and stormwater control of large construction sites. Evidence of compliance with this provision of Vermont State requirements must be provided to receive local approval to proceed. Projects with more than half an acre (0.5) acre of impervious surface shall also conform with the general standards.

B. Review Standards
Based on State design criteria.

C. Application Requirements
Application is made to the Agency of Natural Resources Water Quality Division.

D. Review Procedures
The City of Essex Junction reserves the right to require additional conditions above and beyond those in the State issued permit for due cause. The City reserves this right to address specific operational concerns related to the site and its impact on abutters including the municipal right of way and the municipal infrastructure.

E. Appeals
Any interested party may appeal a decision regarding an erosion and sediment control plan as specified in Chapter 117 of Title 24.

F. Expiration of Approvals
Approvals shall expire as per the Land Development Code, concurrent with the permits

issued by the State of Vermont depending on the phasing and size of the project.

SECTION 516: APPROVAL OF ACTIVITIES INVOLVING DEVELOPMENT WITHIN 200 FEET OF A WATERWAY, FLOODPLAIN OR WETLAND

A. Review Requirement
Activities involving development within 200 feet of a waterway, floodplain or wetland shall require review in accordance with the procedures of this section. The property shall maintain a fifteen (15) foot or more undisturbed buffer to adjacent streams. The buffer may be required to be extended based on flood plain profile, slope of the land or other conditions where further setback is warranted for protection of the stream. A set back of fifty (50) feet above high water mark of the floodplain will be considered for impact of stream meandering, streambank crossing, flooding or other natural stream processes that may have an impact on developed land. Development activity in the area of a wetland will require state and federal regulatory review, and set backs will be the same as required by those authorities and permits.

B. Review Standards
Activities reviewed under this section shall comply with the standards set forth in this Code.

C. Application Requirements
Applications for development of any use, structure, excavation, filling, clearing or grading activity located within two hundred (200) feet of a waterway, floodplain or wetland shall indicate the distance from the proposed activity to the waterway, floodplain or wetland and the percent slope of the proposed site.

D. Review Procedures
Staff shall review all applications for completeness within three (3) days of receipt. The Public Works Superintendent or Water Quality Superintendent shall act on all applications within ten 10 days.

E. Appeals
Any interested party may appeal a decision regarding a zoning district as specified in Chapter 117 of Title 24.

F. Expiration of Approvals
Approvals shall expire one (1) year from the date permits are issued, if not implemented.

G. Conditional Use Review
Shall be considered if it is determined that there is no potential adverse impact to the waters of the same.

H. Riparian Buffer Landscaping Requirements

It is the objective of these standards to promote the establishment and protection of heavily vegetated areas of native vegetation and trees along waterways to reduce the impact of stormwater runoff, prevent soil erosion, protect wildlife, fish habitat and maintain water quality.

Any application for development approval under this Code shall provide that all lands within a required riparian buffer are left in an undisturbed, naturally vegetated condition. These standards shall apply to all zoning districts. The following activities are not permitted within Riparian Buffer areas:

1. The creation of new lawn areas.
2. The clearing of trees that are not dead, heavily damaged by ice storms or other natural events, or diseased.
3. Property owners already encroaching on a riparian buffer shall be encouraged to return mowed areas to their naturally vegetated state.

The following conditions will apply to any application for development approval under this Code:

1. Prior to issuing a zoning permit, the Development Review Board may require on-site restoration of degraded riparian habitats through supplemental planting and landscaping with appropriate species and by designating no mow zones.
2. Restoration standards for planting and landscaping appropriate for riparian buffers are outlined in the *Vermont Stormwater Management Manual Rule and Design Guidance (as most recently amended).*
3. Riparian buffers established as part of this section shall be maintained by the developer and all other subsequent property owners or associations within the development. Reference to these established buffers shall be made in the appropriate deeds or common property documents.

The standards for maintenance of the stream buffer zone prohibit the following:

1. Property owners already encroaching on the stream buffer are encouraged to return mowed areas to their naturally vegetated state.
2. Any areas within a required stream buffer that are not vegetated or that are disturbed during construction shall be seeded with a naturalized mix of grasses rather than standard lawn grass and shall not be mowed more than one (1) time per calendar year after establishment.
3. Supplemental planting and landscaping with appropriate species of vegetation to restore and enhance the effective filtering function of a stream buffer is encouraged.

Expansion of pre-existing structures within stream buffers: Any building, structure, or land or use thereof, which is made non-conforming by reason of the adoption of this section, may be expanded or reconstructed, subject to the following provisions:

1. The structure to be expanded or reconstructed was originally constructed on or before promulgation of this rule.

2. The total building footprint area of the expanded or reconstructed structure shall not be more than fifty (50) percent larger than the footprint of the structure lawfully existing.
3. The non-conforming use shall not be changed to another non-conforming use.
4. A non-conforming use that is changed to a conforming use, discontinued for six (6) months, or abandoned shall not be resumed.
5. Enlargement, repair and reconstruction of pre-existing structures within stream buffers shall be permitted if it is determined that the development activity will not decrease the existing structure setback from the water body or increase the encroachment within the stream buffer.

New uses and encroachments within stream buffers: The encroachment of new land development activities into the City's stream buffers is discouraged. The Development Review Board may authorize the following as uses within stream buffers subject to the standards and conditions enumerated for each use:

1. Agriculture, horticulture, and forestry, including the keeping of livestock, provided that any building or structure appurtenant to such uses is located outside the stream buffer.
2. Clearing of vegetation and filling or excavating of earth materials, only to the extent directly necessitated for the construction or safe operation of a permitted or conditional use on the same property and where the Development Review Board finds that there is no practicable alternative to the clearing, filling or excavating within the stream buffer. This section is not meant to exclude any streambank alteration permitting requirements of the State of Vermont.
3. Encroachments necessary to rectify a natural catastrophe for the protection of the public health, safety and welfare.
4. Encroachments necessary for providing for or improving public facilities.
5. Public recreation paths located at least fifteen (15) feet above the ordinary high water mark or measured from the top of bank, whichever is greater.
6. Stormwater treatment facilities meeting the stormwater treatment practices and sizing criteria set forth in the *Vermont Stormwater Management Manual Rule and Design Guidance (as most recently amended)*. Evidence of an approved permit from the Vermont Agency of Natural Resources for coverage under the applicable permitting requirements shall be required to meet this criterion for encroachment into a stream buffer.
7. Roadways or access drives for purposes of crossing a stream buffer area to gain access to land on the opposite side of the buffer, or for purposes of providing safe access to an approved use, in cases where there is no feasible alternative for providing safe access and the roadway or access drive is located at least fifteen (15) feet above the ordinary high water mark or measured from the top of bank, whichever is greater.
8. Utility lines, including power, telephone, cable, internet, sewer and water, to the extent necessary to cross or encroach into the stream buffer where there is no feasible alternative for providing or extending utility services.
9. Outdoor recreation provided any building or structure (including parking and

driveways) appurtenant to such use is located outside the stream buffer, and which does not involve the use of mowed fields within the stream buffer.

10. Research and educational activities provided any building or structure (including parking and driveways) appurtenant to such use is located outside the stream buffer.

I. Exceptions

A planting project considered to have a permit by operation under 24 V.S.A. § 4424(c) shall not be required to file an application to obtain a permit under this Code. A "planting project" means planting vegetation to restore natural and beneficial floodplain functions, as defined in 42 U.S.C. § 4121(a), that include floodwater storage, water quality improvement, and supporting riparian and aquatic habitat. By operation of 24 V.S.A. § 4424(c), a planting project in a flood or other hazard area or river corridor protection area is considered to have a permit under this chapter unless the project is:

1. part of a larger undertaking that includes the construction or installation of structures, the creation of earthen berms or banks, or physical disturbance of land or water other than necessary for planting vegetation; or

2. a forestry operation or part of a forestry operation as defined in 10 V.S.A. § 2602 and exempt from municipal regulation under subsection 4413(d) of this title.

CHAPTER 6: ZONING DISTRICTS REGULATIONS

This section sets forth regulations regarding the use, density, lot size, lot coverage and setbacks on properties in all Zoning Districts within the City. Where applicable, design review standards are also included.

SECTION 600: OFFICIAL ZONING MAP

All land in Essex Junction is divided into Districts as shown on the Official Zoning Map filed with the City Clerk, a copy of which is attached to this Code. Said Official Zoning Map shall be the official record of the zoning status of all land areas within the City.

A. Map Changes
No changes of any nature affecting property shall be made on the Official Zoning Map. It shall be unlawful for any person to alter or change the map upon adoption by the Essex Junction City Council. Any changes or amendments to the Official Zoning Map shall be made by the City Council after Public Hearings pursuant to Title 24, Chapter 117, Section 4404 of Vermont Statutes.

B. Map Interpretation
Staff shall interpret zoning district boundaries as specified below. Appeals to staff decisions may be made to the Development Review Board.

1. District boundaries adjacent to a street, highway, stream or power line shall be construed to follow the centerline.
2. District boundaries adjacent to railroad tracks, or rights of ways shall be construed to follow the centerline.
3. District boundaries, which approximately follow property lines shall be constructed to follow property lines.
4. Where a District splits a parcel or lot, the regulations applying to either portion of the lot may be extended onto the other portion for distance not exceeding fifty (50) feet.
5. The Future Land Use Map as filed with the City Clerk shall be consulted to determine intent in the establishment of any Zoning District boundary.

C. Setback Requirements on Corner Lots
For the purposes of setback requirements, corner lots in all districts are deemed to have two front yards (one on each street), two side yards, and no rear yards.

SECTION 601: MULTI-FAMILY RESIDENTIAL 1 (MF1)

A. Purpose
To provide areas for multi-family residential development and accessory uses.

B. Lot Size/Lot Coverage

1. The minimum lot size shall contain seven thousand five hundred (7,500) square feet. The maximum number of dwelling units shall be three (3) units per seven thousand five hundred (7,500) square feet. In accordance with 24 V.S.A. § 4412, any affordable housing development, as defined in 24 V.S.A. § 4303(2), shall be permitted to exceed density limitations by 40 percent.
2. The maximum total lot coverage shall be fifty (50) percent.
3. No more than two (2) principal buildings shall be allowed per lot, unless approved as part of a Planned Development.

C. Setback Requirements

1. The minimum front yard setback shall be fifteen (15) feet. The maximum front yard setback shall be the larger of the setbacks of the two adjacent lots (or the closest two lots on the same side of the same street). The principal structure closest to the street shall have a setback between the established maximum and minimum setback as described above. If the maximum setback is below the minimum setback as described above, the minimum setback shall prevail. Semi-attached accessory structures (such as a deck) shall be allowed if there is sufficient space between the principal structure and the minimum setback. Porches that are integrated into the principal structure shall be considered part of the principal structure. If a principal structure is not parallel to the front lot line the setback will be determined by the average setback at the two corners of the structure closest to the front lot line. The Development Review Board may waive this requirement if the following conditions are met:
   (a) The proposed setback does not negatively impact the character of the neighborhood; and
   (b) The proposed setback would be in keeping with the setbacks and character of anticipated future development of the area.
2. The minimum side yard setback shall be ten (10) feet.
3. The minimum rear yard setback shall be ten (10) feet.

D. Permitted and Conditional Uses

Permitted and Conditional uses are as indicated on the Use Chart in Section 622 of this Code. A principal building may contain any use identified on the Use Chart in Section 622 for the MF1 zoning district.

E. Parking Requirements

Off-street parking requirements are as specified in Section 703 of this Code.

F. Building Height.

1. Except as permitted in Section 601.F.2, building heights shall not exceed three (3) stories or thirty-five (35) feet, whichever is less.
2. In accordance with 24 V.S.A. § 4412, any affordable housing development, as defined in 24 V.S.A. § 4303(2), shall be permitted one additional floor for no more than four (4) stories or seventy-two (47) feet, whichever is less, provided that the structure

complies with the Vermont Fire and Building Safety Code.

G. Planned Unit Development

Any application for proposed development in the Multi-Family Residential 1 District may, if needed and at the applicant's request, be reviewed as a Planned Unit Development under the provisions of Sections 511 and 723.

SECTION 602: MULTI-FAMILY RESIDENTIAL 2 (MF2)

A. Purpose

To provide areas for the construction of new multi-family dwellings and accessory residential uses.

B. Lot Size/Lot Coverage

1. The minimum lot size shall contain seven thousand five hundred (7,500) square feet. The maximum number of dwelling units shall be three (3) units per seven thousand five hundred (7,500) square feet. In accordance with 24 V.S.A. § 4412, any affordable housing development, as defined in 24 V.S.A. § 4303(2), shall be permitted to exceed density limitations by 40 percent.
2. The maximum lot coverage shall be fifty (50) percent.
3. No more than two (2) principal buildings shall be allowed per lot, unless approved as part of a Planned Development.

C. Setback Requirements

1. The minimum front yard setback shall be fifteen (15) feet. The maximum front yard setback shall be the larger of the setbacks of the two adjacent lots (or the closest two lots on the same side of the same street). The principal structure closest to the street shall have a setback between the established maximum and minimum setback as described above. If the maximum setback is below the minimum setback as described above, the minimum setback shall prevail. Semi-attached accessory structures (such as a deck) shall be allowed if there is sufficient space between the principal structure and the minimum setback. Porches that are integrated into the principal structure shall be considered part of the principal structure. If a principal structure is not parallel to the front lot line the setback will be determined by the average setback at the two corners of the structure closest to the front lot line. The Development Review Board may waive this requirement if the following conditions are met:
   (a) The proposed setback does not negatively impact the character of the neighborhood; and
   (b) The proposed setback would be in keeping with the setbacks and character of anticipated future development of the area.
2. The minimum side yard setback shall be ten (10) feet.
3. The minimum rear yard setback shall be ten (10) feet.

D. Permitted and Conditional Uses

Permitted and Conditional uses are as indicated on the Use Chart in Section 622 of this

Code. A principal building may contain any use identified on the Use Chart in Section 622 for the MF2 zoning district.

E. Parking Requirements
Off-street parking requirements are as specified in Section 703 of this Code.

F. Building Height
Except as permitted in Section 602.F.1, and 602.F.2, building heights shall not exceed three (3) stories or thirty-five (35) feet, whichever is less.

1. The Development Review Board may grant a waiver of up to four (4) stories or forty-eight (48) feet, whichever is less under either of the following conditions:
   (a.) The property is located along a major arterial street and no adverse impacts on the character of the neighborhood would result; or
   (b) The project is not located on a major arterial street, but adequate buffering is proposed that would cause no adverse impacts on the character of the neighborhood.

2 In accordance with 24 V.S.A. § 4412, any affordable housing development, as defined in 24 V.S.A. § 4303(2), shall be permitted one additional floor for no more than:
   (a) four (4) stories or seventy-two (48) feet, whichever is less, if a height waiver is not granted under 602.F.1; or
   (b) no more than five (5) stories or sixty (60) feet, whichever is less, if a waiver is granted under 602.F.1, provided that the structure complies with the Vermont Fire and Building Safety Code.

G. Planned Unit Development
Any application for proposed development in the Multi-Family Residential 2 District may, if needed and at the applicant's request, be reviewed as a Planned Unit Development under the provisions of Sections 511 and 723.

SECTION 603: MULTI-FAMILY RESIDENTIAL 3 (MF3)

A. Purpose
To provide areas for low density multi-family dwellings and accessory residential uses.

B. Lot Size/Lot Coverage
1. The minimum lot size shall be seven thousand five hundred (7,500) square feet
2. The maximum total lot coverage shall be forty (40) percent.

C. Setback Requirements
1. The minimum front yard setback shall be fifteen (15) feet. The maximum front yard setback shall be the larger of the setbacks of the two adjacent lots (or the closest two lots on the same side of the same street). The principal structure closest to the street shall have a setback between the established maximum and minimum setback as described above. If the maximum setback is below the minimum setback as described

above, the minimum setback shall prevail. Semi-attached accessory structures (such as a deck) shall be allowed if there is sufficient space between the principal structure and the minimum setback. Porches that are integrated into the principal structure shall be considered part of the principal structure. If a principal structure is not parallel to the front lot line the setback will be determined by the average setback at the two corners of the structure closest to the front lot line. The Development Review Board may waive this requirement if the following conditions are met:

(a) The proposed setback does not negatively impact the character of the neighborhood; and

(b) The proposed setback would be in keeping with the setbacks and character of anticipated future development of the area.

2. The minimum side yard setback shall be ten (10) feet.
3. The minimum rear yard setback shall be ten (10) feet.

D. Maximum Number of Dwelling Units

The maximum number of dwelling units on any individual lot shall be six (6).

E. Permitted and Conditional Uses

Permitted and Conditional uses are as indicated on the Use Chart in Section 622 of this Code.

F. Parking Requirements

Off-street parking requirements are as specified in Section 703 of this Code.

G. Building Height.

1. Except as permitted in Section 603.G.2, building heights shall not exceed three (3) stories or thirty-five (35) feet, whichever is less.
2. In accordance with 24 V.S.A. § 4412, any affordable housing development, as defined in 24 V.S.A. § 4303(2), shall be permitted one additional floor for no more than four (4) stories or forty-eight (48) feet, whichever is less, provided that the structure complies with the Vermont Fire and Building Safety Code.

H. Planned Unit Development

Any application for proposed development in the Multi-Family Residential 3 District may, if needed and at the applicant's request, be reviewed as a Planned Unit Development under the provisions of Sections 511 and 723.

SECTION 604: VILLAGE CENTER (VC)

A. Purpose

To provide a compact commercial center having a mix of commercial, governmental, cultural and mixed use buildings that are consistent with the purpose of a designated Village Center District, and a neighborhood development area as both are defined by the State of Vermont. The Village Center shall be the core for an ongoing revitalization that

will improve the community's vitality and livability and the goal of having a Center that accommodates growth. Due to the historic nature of the residential neighborhoods surrounding the Five Corners area, the design and layout of any new developments or infill projects shall acknowledge the importance of the existing streetscape and enhance the area through an architectural design and site layout that enhances pedestrian connectivity to adjacent properties.

B. Lot Size/Lot Coverage

1. The minimum lot size shall be five thousand (5,000) square feet. The Village Center District shall not have a maximum allowable density. The maximum number of dwelling units shall be determined by the ability to meet the standards of the Land Development Code including, but not limited to, parking, setbacks, lot coverage and building height.
2. The maximum total lot coverage shall be determined by the Development Review Board as part of Site Plan Review.

C. Setback Requirements

No requirements for commercial or mixed use buildings. For single family buildings, the maximum front yard setback shall be the larger of the setbacks of the two adjacent lots (or the closest two lots on the same side of the same street). The principal structure closest to the street shall have a setback between the established maximum and minimum setback as described above. If the maximum setback is below the minimum setback as described above, the minimum setback shall prevail. Semi-attached accessory structures (such as a deck) shall be allowed if there is sufficient space between the principal structure and the minimum setback. Porches that are integrated into the principal structure shall be considered part of the principal structure. If a principal structure is not parallel to the front lot line the setback will be determined by the average setback at the two corners of the structure closest to the front lot line. The Development Review Board may waive this requirement if the following conditions are met:

1. The proposed setback does not negatively impact the character of the neighborhood; and
2. The proposed setback would be in keeping with the setbacks and character of anticipated future development of the area.

D. Permitted and Conditional Uses

Permitted and Conditional uses are as indicated on the Use Chart in Section 622 of this Code.

E. Design Review and Historic Preservation

Because of the important role the Village Center plays in the regional economy and the unique historic qualities of some of the existing buildings, the Development Review Board is hereby authorized to undertake a special review, as part of its site plan review. Design review is required by the Development Review Board for any proposed construction, reconstruction, demolition or exterior alteration (including a change of color) of any

building in the district with the exception of sign permits, which are approved administratively. Activities involving buildings listed or eligible for the state or national registers of historic places must meet additional standards as described below. All reviews shall be conducted at a public meeting.

1. Purpose. The purpose of this section is to protect those buildings listed or eligible for the State or Federal Register of Historic Places while accommodating new and appropriate infill and redevelopment supporting increased density and multi-modal development. Infill and redevelopment brings opportunities to protect existing historic resources and provide new sources of architectural and urban design for the 21st century while increasing density, activity and economic opportunity in the Village Center District. In addition, the purpose is to carry out the concepts of the Design Five Corners Plan (https://www.ccrpcvt.org/wp-content/uploads/2019/03/D5C-Implementation-Plan_Final-Report.pdf) which are to accommodate infill development while calming traffic and reclaiming more space for people; and to establish a pedestrian friendly atmosphere.
2. Applicability
   (a) The design review standards are applicable to all development proposals within the Village Center District.
   (b) The historic preservation design standards with respect to alterations, additions or redevelopment of existing historic structures as defined in Section 604.E.4.B of this Code are applicable to buildings listed or eligible for the State or National Register of Historic Places or listed on Map 2 in the Comprehensive Plan (https://www.essexjunction.org/fileadmin/files/Planning_Zoning/Map2_Historic_Sites_20190130.pdf). The following buildings are exempt:
      (i) Buildings that have been de-listed, or determined by the Vermont Division for Historic Preservation for state and federal regulatory program purposes to not meet the State Register Criteria for Evaluation and are not eligible for listing in the State Register of Historic Places.
      (ii) Buildings where the historical significance has been compromised and is no longer relevant. A letter must be provided by a qualified Historic Preservation consultant stating this case.
3. District Design Review Procedures. The Development Review Board may deny approval of a proposed development or modification of a structure if it determines that the intent of this Section has not been met. Accordingly:
   (a) Within this district, no structure may be demolished, reconstructed, moved, erected, or changed in use, nor may the exterior be altered or restored without design approval from the Development Review Board, issued in conjunction with subdivision or site plan approval. In the event that subdivision or site plan review is not otherwise required, design review shall be conducted in accordance with site plan review procedures under Section 502 or Section 503.
   (b) Nothing in these design control criteria shall be construed to prevent the ordinary maintenance or repair of any exterior architectural feature in the district, which does not involve a change in the design, material, color or the

outward appearance of the feature.

(c) The review of plans under this Section by the Development Review Board requires the submission of information listed in Section 502 or Section 503 along with building elevations, a description of materials to be used on the exterior of any structure, plans for exterior lighting, signs, drainage and snow removal, and photographs of existing structures and adjacent buildings if applicable. The Development Review Board may require additional information and documentation, as it deems necessary including 3D drawings and/or models of the proposal to assist in understanding the fundamental design elements and important spatial relationships.

(d) Should the Development Review Board deem it necessary to employ an architect or other qualified individual to review any development proposal, the cost of employing such an individual shall be borne by the applicant.

4. District Design Requirements. The Development Review Board shall review all development applications in the Village Center for compliance with the criteria listed below and in accordance with the character of the district as defined by the Essex Junction Comprehensive Plan. The Development Review Board reserves the right to require applicants to undertake their development per the Secretary of Interiors Standards. Staff will review the applicant's proposal and provide guidance as to what the Development Review Board will expect with historic structures.

(a) Design Standards for the Village Center

(i) The relationship of building mass and architectural detail to open space and to the relative size of a person shall be reviewed by the Development Review Board in this District.

(ii) The predominant direction of structural shape, of placement of openings and architectural details at the front façade shall be harmonious with the core principles of a designated Village Center District.

(iii) Buildings shall generally have no setback from the street and be at least two stories in height and maximum four stories to create a consistent street edge and sense of enclosure. Additional building setback to provide for an expansion of the sidewalk or active pedestrian space such as sidewalk cafes or display areas may be allowed and in some cases encouraged.

(iv) Bicycle paths which connect neighborhoods shall be constructed in accordance with planned facilities mapped in the Comprehensive Plan on Map 6: Non-Motorized Transportation, or in conformity to a Bicycle Plan as approved by the Development Review Board.

(v) Site features and design shall promote cycling, walking and transit as a viable means of transportation and recreation for residents, consumers, visitors, and employees. As appropriate to the location of the application, features shall include at least two or more of the following, or similar amenity with approval from the Development Review Board:

a. Pedestrian access directly from the building to the public sidewalk;

b. Pocket park with benches or similar amenities between the public

realm and the private building (see image box for examples to help clarify the intent of this requirement);

c. Public art, murals or interactive games;
d. Covered bus shelter; and
e. Shade trees.

Below: Public Realm Amenity examples for Section 604.E.4(a)(v). These images are provided as illustrations of intent.

All images herein are from *Seven Catalytic Placemaking Strategies: A Discussion about the Future of Vermont Downtowns* by Fred Kent, Kathy Madden and Amy Tomasso.

url: https://www.sociallifeproject.org/rural-placemaking-vermont-downtowns/

(vi) The following architectural elements or features shall be harmonious with existing buildings and significant, predominant or established patterns in the district:

a. The relationship between the width to height of the front elevation of the building.

b. The relationship of width to height of windows and doors.

c. The rhythmic relationship of openings to solid areas in front façades.
d. The spaces between the proposed structure or structural alteration.
e. The relationship of entranceways to buildings and porches.
f. The materials, textures, and colors, including primary and accent or trim colors.
g. Proposed architectural details (such as lintels, arches, chimneys).
h. Proposed roof shapes and lines.
i. Proposed enclosures, including fences, brick walls, stone walls, evergreen hedgerows and building facades, which are also continuous and cohesive with existing walls in the district.
j. Proposed landscaping shall be compatible with existing quality and quantity of landscaping in the vicinity, with consideration given to existing landscape mass and continuity.
k. The proposed ground cover shall be compatible with the predominant ground cover in the district.
l. Storage areas, service areas, trash receptacles, accessory structures and parking areas shall be screened from view from the street and adjoining properties.

(b) Secretary of the Interiors Standards for the Rehabilitation of Historic Structures:

(i) An existing property shall be used for its historic purpose or be placed in a new use that requires minimal change to the defining characteristics of the building and its site and environment.
(ii) The historic character of a property shall be retained and preserved. The removal of historic materials or alteration of features and spaces that characterize a property shall be avoided.
(iii) Each property shall be recognized as a physical record of its time, place, and use. Changes that create a false sense of historical development, such as adding conjectural features or architectural elements from other buildings, shall not be undertaken.
(iv) Most properties change over time; those changes that have acquired historic significance in their own right shall be retained and preserved.
(v) Distinctive features, finishes, and construction techniques or examples of craftsmanship that characterize a property shall be preserved.
(vi) Deteriorated historic features shall be repaired rather than replaced. Where the severity of deterioration requires replacement of a distinctive feature, the new feature shall match the old in design, color, texture, and other visual qualities and, where possible, materials. Replacement of missing features shall be substantiated by documentary, physical, or pictorial evidence.
(vii) Chemical or physical treatments, such as sandblasting, that cause damage to historic materials shall not be used. The surface cleaning of

structures, if appropriate, shall be undertaken using the gentlest means possible.

(viii) Significant archeological resources affected by a project shall be protected and preserved. If such resources must be disturbed, mitigation measures shall be undertaken.

(ix) New additions, exterior alterations, or related new construction shall not destroy historic materials that characterize the property. The new work shall be differentiated from the old and shall be compatible with the massing, size, scale, and architectural features to protect the historic integrity of the property and its environment.

(x) New additions and adjacent or related new construction shall be undertaken in such a manner that if removed in the future, the essential form and integrity of the historic property and its environment would be unimpaired.

5. Demolition of Historic Structures. The demolition of listed, or properties eligible for historic listing is discouraged and it is the intent of this section to limit the demolition of historic structures unless the following standards are met. The intent of this section is to provide a procedure for the review of applications for the demolition of a historic structure. The Development Review Board may require professional assistance in evaluating an application for demolition at the applicants' expense in order to determine compliance with the standards of this section. An application for demolition of a historic structure will be reviewed based on financial, structural, historic, design and community benefits of the proposed redevelopment.

(a) Application for Demolition

(i) A report from a licensed engineer qualified to assess the structural integrity of historic buildings is required. The report shall address the ability for rehabilitation and reuse of the existing building as it pertains to the buildings structural integrity and cost of rehabilitation.

(ii) A report from a qualified professional (planner, economist, business consultant) on the economic feasibility to rehabilitate and/or operate the historic building or site while preserving its historic qualities. The report, at the request of the Development Review Board, may require the report to assess options for sensitive building expansions as it pertains to the economic viability of the building.

(iii) A statement from the applicant regarding compliance with the standards for demolition of a historic structure.

(iv) Any building in non-compliance with the design requirements for historic structures as a result of a fire, flood or similar unforeseen event shall apply within six months of the date of the event for an application to demolish the building or approval of a plan for restoration. All of the standards in this section shall be fully considered including economic hardship, structural integrity and community benefit.

(b) Demolition Review Standards:

(i) Economic Hardship. The continued operation of the historic structure is

financially infeasible based on existing and potential land uses and any costs of rehabilitation. All options for adaptive reuse, resale, or relocation shall be considered and addressed in the application.

(ii) Structural Integrity. The structure is beyond repair or the cost of repairing and operating the building is not financially feasible or reasonable; or

(iii) Community Benefit. The redevelopment plan for the site has significant state, regional or community benefits in terms of urban design, ecology, and cultural or economic benefits. The redevelopment proposal shall consider and address impacts on adjacent historic properties and the entire district. The potential of incorporating historic structures into redevelopment plans shall be considered and is encouraged.

(c) Approval for Demolition. Historic buildings that are approved for demolition require the applicant to comply with the following:

(i) Any approval for the demolition of a historic structure shall require the applicant to document the building in accordance with the Historic American Building Survey (HABS).

(ii) Assurance from the applicant that the redevelopment plan as approved will be implemented if the historic structure demolition is approved based on the community benefit of the redevelopment plan. In addition, structures approved for demolition based on the community benefit shall not be demolished until construction of the entire project has received all financial resources and regulatory permits. The Development Review Board may require a bond or letter of credit as a condition of approval for the demolition of a historic structure.

(iii) The time between demolition and the commencement of construction shall not exceed 3 months unless an alternative timeline is specifically approved as part of the demolition approval from the Development Review Board.

6. Formula-Based Retail and Restaurants.

(a) Purpose. Formula-based retail and restaurants have the potential to negatively impact the unique character and small town atmosphere in the Village Center District unless carefully designed to minimize negative impacts associated with standardized buildings, signs and operations that does not take into account the special qualities and historic features of the District as defined in the Essex Junction Comprehensive Plan.

(b) Applicability. Formula-based retail and restaurants, as defined in Chapter 2, shall require conditional use review and approval for the establishment or expansion of such an operation in the Village Center District.

(c) Review Standards. In addition to the conditional use review standards, the following criteria pertain to all proposed formula-based retail and restaurant establishments and the expansion of existing ones:

(i) New buildings shall be designed with attention to the existing site features and shall not consist of a standardized building type used by the

formula-based business on other sites and locations.

(ii) Façade detailing and style shall be unique and not part of a standardized set of features used in other locations, but rather complement the historic identity of the Village Center District.

F. Parking

Due to the unique characteristics of this District no minimum parking requirements are established. However, the Development Review Board may require parking as a part of any Site Plan approval. The Development Review Board shall use the parking standards of Chapter Seven as a guide to determine reasonable parking. If on-site parking is required, it shall be placed on the side or rear of the building, not in front. If parking is placed on the side, it shall not take up more than thirty (30) percent of the linear frontage of the lot. The Development Review Board may waive this requirement due to site constraints. Below grade parking or structured parking may also be approved by the Development Review Board. Municipal parking lots are exempt from the side, rear and thirty (30) percent limit on linear frontage requirements for parking areas.

G. Planned Unit Development

Any application for proposed development may, if needed and at the applicant's request, be reviewed as a Planned Unit Development under the provisions of Sections 511 and 723.Development Review Board

H. Building Height.

1. Except in as permitted in Section 604.H.2, building heights shall not exceed four (4) stories or fifty-eight (58) feet, whichever is less.

2. In accordance with 24 V.S.A. § 4412, any affordable housing development, as defined in 24 V.S.A. § 4303(2), shall be permitted one additional floor for no more than five (5) stories or seventy-two (72) feet, whichever is less, provided that the structure complies with the Vermont Fire and Building Safety Code.

SECTION 605: HIGHWAY-ARTERIAL DISTRICT (HA)

A. Purpose

To provide areas for retail, wholesale, commercial, residential, service and professional businesses while minimizing negative impacts due to increased traffic.

B. Density/Lot Coverage.

1. The minimum lot size shall be ten thousand (10,000) square feet. The Highway Arterial District shall not have a maximum allowable density. The maximum number of dwelling units shall be determined by the ability to meet the standards of the Land Development Code including, but not limited to, parking, setbacks, lot coverage and building height. In accordance with 24 V.S.A. § 4412, any affordable housing development, as defined in 24 V.S.A. § 4303(2), shall be permitted to exceed density limitations by 40 percent.

2. The maximum total lot coverage shall be sixty-five (65) percent, the sixty-five (65) percent lot coverage may be increased up to eighty (80) percent through a waiver process granted by the Development Review Board. Waivers shall be based upon the following criteria and may include specific conditions:

(a) Unique physical characteristics of the site proposed for development.
(b) Superior building design, lot layout and landscaping design.
(c) Provision of public open spaces or superior bicycle and pedestrian access.
(d) Joint or combined vehicular access with adjoining properties.

C. Setback Requirements

Overhangs or eaves on buildings may encroach into the setback up to two (2) feet.

1. The minimum front yard setback shall be twenty (20) feet.
2. The minimum side yard setback shall be ten (10) feet.
3. The minimum rear yard setback shall be ten (10) feet.

D. Permitted and Conditional Uses

Permitted and Conditional uses are as indicated on the Use Chart in Section 622 of this Code.

E. Parking Requirements

Off-street parking requirements are as specified in Section 703 of this Code.

F. Building Height

1. Except as permitted in section 605.F.2, building height shall not exceed four (4) stories or fifty-eight (58) feet, whichever is less.

2. In accordance with 24 V.S.A. § 4412, any affordable housing development, as defined in 24 V.S.A. § 4303(2), shall be permitted one additional floor for no more than five (5) stories or seventy-two (72) feet, whichever is less, provided that the structure complies with the Vermont Fire and Building Safety Code.

G. Planned Unit Development

Any application for proposed development may, if needed and at the applicant's request, be reviewed as a Planned Unit Development under the provisions of Sections 511 and 723.

SECTION 606: MULTI-FAMILY/MIXED-USE-1 DISTRICT (MF-MU1)

A. Purpose

The Multi-Family/Mixed-Use-1 District is intended to allow high density multi-family development along low intensity commercial uses along major transportation and public transit corridors. High Density, Mixed Use developments and affordable housing with parking below grade or on the first floor of the building are encouraged. Development in the MF-MU1 District should support alternative modes of transportation, while accommodating the automobile.

B. Density/Lot Coverage.

1. The minimum lot size in the MF-MU1 District shall be fifteen thousand (15,000) square feet. The MF-MU1 District shall not have a maximum allowable density. The maximum number of dwelling units shall be determined by the ability to meet the standards of the Land Development Code including, but not limited to, parking, setbacks, lot coverage and building height.
2. The maximum total lot coverage shall be sixty-five (65) percent, the sixty-five (65) percent lot coverage may be increased up to eighty (80) percent through a waiver process granted by the Development Review Board. Waivers shall be based upon the following criteria and may include specific conditions:
   (a) Unique physical characteristics of the site proposed for development.
   (b) Superior building design, lot layout and landscaping design.
   (c) Provision of public open spaces or superior bicycle and pedestrian access.
   (d) Joint or combined vehicular access with adjoining properties.

C. Setback Requirements

The Development Review Board may waive the screening and buffering requirements for new developments upon determining that the development will not adversely impact neighboring properties. Overhangs or eaves on buildings may encroach into the setback up to two (2) feet.

1. Side: The side yard setback shall be ten (10) feet.
2. Front: The minimum front yard setback shall be twenty (20) feet, the maximum front yard setback shall be thirty (30) feet for the principal structure. At least thirty (30) percent of the front of the principal structure shall be within the minimum and maximum setback.
3. Rear: The required rear setback shall be ten (10) feet.

D. Permitted and Conditional Uses

Permitted and Conditional uses are as indicated on the Use Chart in Section 622 of this Code.

E. Parking Requirements

Off-street parking requirements are as specified in Section 703 of this Code.

1. At Grade Parking on First Floor of Building: The building façade for parking on

the first floor of the principal structure shall have a residential appearance and shall blend with the upper floors of the building.

F. Building Height

1. Except as permitted in Section 606.F.2, building height shall not exceed four (4) stories or fifty-eight (58) feet, whichever is less.

2. In accordance with 24 V.S.A. § 4412, any affordable housing development, as defined in 24 V.S.A. § 4303(2), shall be permitted one additional floor for no more than five (5) stories or seventy-two (72) feet, whichever is less, provided that the structure complies with the Vermont Fire and Building Safety Code.

G. Planned Unit Development

The Development Review Board may approve a Planned Unit Development for use as a MF-MU1 District. In connection with such PUD approval, the Development Review Board may authorize the construction of structures and facilities to accommodate any of the uses allowed in the Multi-Family Mixed-Use-1 District. Any application for proposed development in the Multi-Family Mixed-Use-1 District may, at the applicant's request, be reviewed as a Planned Unit Development. Refer to Section 511.B.1-3 for general and specific review standards in addition to waiver information for a PUD.

SECTION 607: MULTI-FAMILY/MIXED-USE-2 DISTRICT (MF-MU2)

A. Purpose

The Multi-Family/Mixed-Use-2 District is intended to allow high density multi-family development along low intensity commercial uses along major transportation and public transit corridors. High Density, Mixed Use developments and affordable housing with parking below grade or on the first floor of the building are encouraged. Development in the MF-MU2 District should support alternative modes of transportation, while accommodating the automobile. Developments within this district should be designed in such a way as to build upon the village character found in the core areas of the City.

B. Density/Lot Coverage

1. The minimum lot size in the MF-MU2 District shall be fifteen thousand (15,000) square feet. The maximum permitted density shall be fifteen (15) units per acre. In accordance with 24 V.S.A. § 4412, any affordable housing development, as defined in 24 V.S.A. § 4303(2), shall be permitted to exceed density limitations by 40 percent.

2. The maximum total lot coverage shall be sixty-five (65) percent, the sixty-five (65) percent lot coverage may be increased up to eighty (80) percent through a waiver process granted by the Development Review Board. Waivers shall be based upon the following criteria and may include specific conditions:

(a) Unique physical characteristics of the site proposed for development.
(b) Superior building design, lot layout and landscaping design.
(c) Provision of public open spaces or superior bicycle and pedestrian access.
(d) Joint or combined vehicular access with adjoining properties.

C. Setback Requirements

The Development Review Board may waive the screening and buffering requirements for new developments upon determining that the development will not adversely impact neighboring properties. Overhangs or eaves on buildings may encroach into the setback up to two (2) feet.

1. Side: The side yard setback shall be ten (10) feet.
2. Front: The minimum front yard setback shall be twenty (20) feet; the maximum front yard setback shall be thirty (30) feet for the principal structure. At least thirty (30) percent of the front of the principal structure shall be within the minimum and maximum setback.
3. Rear: The required rear setback shall be ten (10) feet.

D. Permitted and Conditional Uses

Permitted and Conditional uses are as indicated on the Use Chart in Section 622 of this Code.

E. Parking Requirements

Off-street parking requirements are as specified in Section 703 of this Code.

1. At Grade Parking on First Floor of Building: The building façade for parking on the first floor of the principal structure shall have a residential appearance and shall blend with the upper floors of the building.

F. Building Height.

1. Except as permitted in Section 607.F.2, building height shall not exceed four (4) stories or fifty-eight (58) feet, whichever is less.
2. In accordance with 24 V.S.A. § 4412, any affordable housing development, as defined in 24 V.S.A. § 4303(2), shall be permitted one additional floor for no more than five (5) stories or seventy-two (72) feet, whichever is less, provided that the structure complies with the Vermont Fire and Building Safety Code.

G. Planned Unit Development

The Development Review Board may approve a Planned Unit Development for use as a MF-MU2 District. In connection with such PUD approval, the Development Review Board may authorize the construction of structures and facilities to accommodate any of the uses allowed in the Multi-Family/Mixed-Use-2 District. Any application for proposed development in the Multi-Family/Mixed-Use-2 District may, at the applicant's request, be reviewed as a Planned Unit Development. Refer to Section 511.B.1-3 for general and specific review standards in addition to waiver information for a PUD.

SECTION 608: TRANSIT ORIENTED DEVELOPMENT (TOD)

A. Purpose

The purpose of the Transit Oriented Development District (TOD) is to encourage development that supports a variety of transportation options including public transit (bus and rail), walking, biking and the automobile.

1. In order to achieve the desired goal of providing greater transportation options, development within the district shall embody the characteristics of compact urban development and pedestrian oriented design. Mixed use buildings with first floor retail, wide sidewalks, interconnected streets, on-street parking, high density residential development, pedestrian amenities, transit stations and stops, open spaces, and public or shared parking are strongly encouraged and in many cases required as a part of the standards within the TOD District.
2. The area within the TOD District is currently served by public bus transportation. In addition, the TOD District is adjacent to an active rail corridor, which may be used for light rail service in the future. A bike path is also planned for the rail corridor. Therefore, the TOD District is in an ideal location to provide greater transportation options.
3. The specific objectives of the TOD District are:
   (a) Create an environment that is conducive to using public transit, walking and riding a bike;
   (b) Accommodate a mix of uses in a form that attracts pedestrians;
   (c) Integrate commercial, institutional and residential development into a compact development pattern arranged around a street grid;
   (d) Provide pedestrian amenities and open spaces to create a comfortable and attractive environment;
   (e) Provide public and/or shared parking to accommodate automobiles, but will not detract from the pedestrian environment;
   (f) High Density Residential development;
   (g) First Floor Retail; and
   (h) Encourage the use of Tax Increment Financing to support public improvements in the district.

B. Applicability

Development proposals that involve more than thirty (30) percent or more of the existing building(s) square footage on the effective date of this ordinance shall be in full compliance with the standards of the TOD District. It is the intent of the TOD District regulations to prohibit the expansion of existing non-conforming structures beyond thirty (30) percent of the existing floor space on the effective date of this ordinance unless a waiver is granted by the Development Review Board upon determination that the expansion would not significantly detract from the goals and intent of the TOD District. Any expansion of existing non-conforming structures shall comply with the provisions of Chapter 8.

1. The use chart in Section 622 identifies the allowed uses in the TOD District, which shall apply on effective date of this code. Non-conforming uses shall comply with the standards in Chapter 8 regarding non-conforming uses.
2. The standards within the TOD District in some cases conflict with other standards

established in the Land Development Code. The standards contained within this district shall override and take precedent over other standards when in conflict with the standards of the TOD District.

C. Density/Lot Coverage

1. The minimum lot size in the TOD District is five thousand (5,000) square feet. There shall be no maximum residential density. Residential development potential shall be determined by the ability to meet the other provisions of the Land Development Code including parking, building height, setbacks and lot coverage.
2. The maximum total lot coverage shall be one hundred (100) percent.

D. Setback Requirements

1. There shall be no minimum required setbacks.
2. The maximum front yard setback shall be twenty (20) feet.

E. Building Frontage, Façade and Entry

1. All buildings shall have a minimum building frontage on a public street of seventy-five (75) percent of the frontage of the lot. The Development Review Board may waive this requirement if the proposed land use warrants less building frontage to accommodate on-site parking on the side of the building or due to site constraints.
2. All structures require clear windows, which shall encompass at least fifty (50) percent of the building façade along the street from three (3) feet to six (6) feet and eight (8) inches above the finished sidewalk grade.
3. At-grade, below grade and above grade parking is allowed. However, at-grade structured parking shall not be allowed unless the parking is on the interior of the structure and a liner building is present along the street frontage on the first floor.

F. Building Height.

1. Except as permitted in Section 608.F.2, the maximum allowable building height shall be four (4) stories or fifty-eight (58) feet, whichever is less.
2. In accordance with 24 V.S.A. § 4412, any affordable housing development, as defined in 24 V.S.A. § 4303(2), shall be permitted one additional floor for no more than five (5) stories or seventy-two (72) feet, whichever is less, provided that the structure complies with the Vermont Fire and Building Safety Code.

G. Permitted and Conditional Uses

Permitted and Conditional uses are as indicated on the Use Chart in Section 622 of this Code.

H. Access to Public Streets

Curb cuts onto major arterial streets shall be minimized; shared curb cuts and joint access are strongly encouraged. Each property shall be allowed a single curb cut in accordance with the width requirements of Section 705 unless waived by the Development Review Board upon determination that an additional curb cut is necessary to provide adequate

access to the site.

I. Parking Requirements and Location

1. The parking requirements are as follows:

Land Use	Parking Requirement
Residential	1 space per unit
Lodging	1 space per room
Office	2 spaces per 1,000 SF of net office space
Retail	3 spaces per 1,000 SF of net retail space
Other	As determined by the Development Review Board based on anticipated need. The Development Review Board shall use the requirements of Chapter 7 and other national parking standards as a guide.

2. Parking shall be provided along the rear of the lot, unless a waiver is granted in accordance with Section 608.E.1.
3. At the discretion of the City Council, parking lots created as part of a development project may be accepted by the City as municipal public parking.
4. Shared parking and connections between parking lots are encouraged to provide better access, traffic flow, and ample parking.

J. Street and Sidewalk Regulations

For the redevelopment of large (over five (5) acres) parcels within the TOD District, new streets, blocks, and lots shall be established in order to create a pedestrian friendly environment that supports a variety of transportation options. For new streets, the following standards shall be met:

5. Street Design and Layout
   (a) All new streets within the TOD District shall be provided as public streets. Alleys shall be privately owned and maintained. The overall number of alleys shall be limited to the minimum amount necessary to provide adequate access to the rear of buildings. Alleys shall be designed to minimize the number of access points onto public streets.
   (b) New Streets shall not have a block length greater than six hundred (600) feet.
   (c) Sidewalks within the TOD District shall have a minimum of eight (8) feet of unobstructed width.
   (d) Major redevelopment projects within the TOD District shall include bike lanes at least five (5) feet in width within the development in order to provide convenient and safe bicycle access within the district. It is not expected that every new street will have a bike lane, but rather those that provide major bicycle transportation routes within the district. All new streets shall include

crosswalks at all intersections, which are in compliance with the Americans with Disabilities Act.

(e) Pedestrian amenities including benches, trash receptacles, and bike racks shall be incorporated into the design of new streets.

(f) Street trees shall be planted every forty (40) feet on center with tree grates and structural soil (See Appendix A for Public Works Specifications). Street trees shall be placed between the pedestrian travel way and the curb.

(g) New streets shall include on-street parallel or forty-five (45) degree angled parking.

(h) Pedestrian street lamps shall be incorporated into all new streets. The lamps shall be full cut-off fixtures with metal halide bulbs and mounted no higher than fifteen (15) feet. Pedestrian street lamps shall be of a decorative architectural style and approved by the Development Review Board.

(i) All new streets shall incorporate bus stops and shall be coordinated with Green Mountain Transit (GMT). The applicant shall be required to provide written comments from GMT on the proposed bus stops and facilities.

(j) New streets with parallel parking on both sides of the street shall have two eleven (11) foot travel lanes.

(k) New streets with forty-five (45) degree angled parking shall have two (2) twelve (12) foot travel lanes.

K. Planned Unit Development

Any application for proposed development may, if needed and at the applicant's request, be reviewed as a Planned Unit Development under the provisions of Sections 511 and 723.

L. Special Uses

Uses identified with an “S” on the Use Chart in Section 622 of this Code for the TOD District shall only be allowed on the first story.

SECTION 609: RESIDENTIAL-OFFICE (R-O)

A. Purpose

Provide areas for small office conversions of existing residential structures while maintaining residential type architecture. It is not the intent of this District to allow conversions which substantially alter the residential appearance of the structure or which alter the residential character of the neighborhood.

B. Lot Size/Lot Coverage

1. The minimum lot size shall be seven thousand five hundred (7500) square feet
2. The maximum total lot coverage shall be forty (40) percent.
3. No more than two (2) principal buildings shall be allowed per lot, unless approved as part of a Planned Development.

C. Setback Requirements

1. The minimum front yard setback shall be fifteen (15) feet. The maximum front yard setback shall be the larger of the setbacks of the two adjacent lots (or the closest two lots on the same side of the same street). The principal structure closest to the street shall have a setback between the established maximum and minimum setback as described above. If the maximum setback is below the minimum setback as described above, the minimum setback shall prevail. Semi-attached accessory structures (such as a deck) shall be allowed if there is sufficient space between the principal structure and the minimum setback. Porches that are integrated into the principal structure shall be considered part of the principal structure. If a principal structure is not parallel to the front lot line, the setback will be determined by the average setback at the two corners of the structure closest to the front lot line. The Development Review Board may waive this requirement if the following conditions are met:

(a) The proposed setback does not negatively impact the character of the neighborhood; and

(b) The proposed setback would be in keeping with the setbacks and character of anticipated future development of the area.

Applicants may apply for a variance if they do not meet the criteria above but believe they cannot meet the requirements of this Section.

2. The minimum side yard setback shall be eight (8) feet.

3. The minimum rear yard setback shall be eight (8) feet.

D. Maximum Number of Dwelling Units

The maximum number of dwelling units on any individual lot shall be six (6).

E. Permitted and Conditional Uses

Permitted and Conditional uses are as indicated on the Use Chart in Section 622 of this Code.

F. Parking Requirements

Off-street parking requirements are as specified in Section 703 of this Code.

G. Building Height

Building height shall not exceed three (3) stories or thirty-five (35) feet, whichever is less.

H. Special Standards for Residential Conversions

Any proposed residential conversion which adds one or more dwelling units shall require Site Plan approval. In addition, the following standards shall be met:

1. Parking for additional dwelling units shall be designed to minimize impact on adjoining properties. The Development Review Board may require that screening, landscaping, berming or other techniques be used as a condition of approval.

2. Alterations to the structure shall not substantially change the single family character of the structure. Added exits, stairways and window treatments shall be designed to protect the residential character of the structure. The Development Review

Board may require that additions or changes be screened from view by berms, fencing and/or landscaping treatments.

I. Special Standards for Office Conversions

Proposed conversions to non-residential uses shall require Conditional Use and Site Plan approval. In addition to Site Plan standards, the Development Review Board shall review the following special standards:

1. The proposed use shall not cause significant sound or traffic impacts on adjoining properties.
2. Parking areas shall be arranged to minimize the impact on adjoining properties. Parking shall not be allowed within any front or side yard. The additional parking shall be effectively screened from ground level view of adjoining residences. The Development Review Board may require that screening, landscaping, berming or other techniques be used as a condition of approval.
3. Signs advertising the use shall be limited to twenty (20) square feet in area and not internally illuminated. Only one sign is allowed per business. The one sign may be a freestanding, projecting or wall sign.
4. The application shall specify the number of employees and shall certify to the Development Review Board that there will be no increase in employees without notice. Upon receipt of such notification, the Development Review Board may decide to reconsider the Site Plan approval and shall so notify the applicant within forty-five (45) days of receipt of the notice of increased employees.
5. The application shall include an estimate of the number of daily customers. If, at a later date, the Development Review Board should determine that the daily number of customers is significantly greater than estimated, the Development Review Board may reconsider the Site Plan approval and shall so notify the applicant.
6. Businesses to be allowed in this district are those which generally serve customers on an appointment only basis, and shall be restricted to the following:
   (a) Doctor, lawyer, accountant, insurance agent, planner, engineer, architect and similar professions.
   (b) Real estate offices and travel agencies.
   (c) Barber shop or beauty parlor.
   (d) Dance and gymnastics studios, provided that lessons are restricted to not more than ten (10) customers at a time.
   (e) Retail sales associated with any of the above uses, provided that the space (including storage) allocated to retail goods shall not exceed ten (10) percent of the total floor.
   (f) Apothecary type pharmacy as an accessory use, provided that the space (including storage) allocated to retail goods shall not exceed ten (10) percent of the total floor.
7. The Development Review Board may restrict hours, employees and customers, and may specify other conditions necessary to protect the residential character of the neighborhood.
8. The Development Review Board may impose conditions on parking, traffic

circulation (including prohibiting parking in front yards), drainage and landscaping as it deems necessary to protect the residential character of the neighborhood.

9. Alterations to the structure shall not substantially change the single family character of the structure. Added exits, stairways and window treatments shall be designed to protect the residential character of the structure. New construction shall be of residential construction and shall fit the established character of the neighborhood. The Development Review Board may require that additions or changes be screened from view by berms, fencing and/or landscaping treatments.

J. Standards for Existing Non-Residential Structures

Current uses of non-residential type structures may be sold or leased to support another use, providing it is, in the opinion of the Administrative Officer, similar to the original use and intensity.

SECTION 610: OPEN SPACE DISTRICT

A. Purpose

To provide and maintain open lands within the City and its neighborhoods, and to provide locations for public recreation and school facilities.

B. Lot Size/Lot Coverage

1. The minimum lot size shall contain three (3) acres.
2. The maximum total lot coverage shall be twenty (20) percent.

C. Setback Requirements

1. The minimum front yard setback shall be:
   (a) For agricultural uses, forty (40) feet.
   (b) For all other uses, fifty (50) feet.
2. The minimum side yard setback shall be:
   (a) For agricultural uses, twenty (20) feet.
   (b) For all other uses, fifty (50) feet.
3. The minimum rear yard setback shall be:
   (a) For agricultural uses, twenty (20) feet.
   (b) For all other uses, fifty (50) feet.

D. Permitted and Conditional Uses

Permitted and Conditional uses are as indicated on the Use Chart in Section 622 of this Code.

E. Parking Requirements

Off-street parking requirements are as specified in Section 703 of this Code.

F. Building Height

Building heights shall not exceed three (3) stories or thirty-five (35) feet whichever is less.

SECTION 611: LIGHT INDUSTRIAL (LI)

A. Purpose
To provide areas for manufacturing, warehousing, research and development while maintaining high air and water quality.

B. Density/Lot Coverage
1. The minimum lot size shall be ten thousand (10,000) square feet.
2. The maximum total lot coverage shall be sixty-five (65) percent.

C. Setback Requirements
1. The minimum setback from a public street shall be one hundred (100) feet.
2. The minimum setback from an adjoining property line shall be fifty (50) feet.

D. Permitted and Conditional Uses
Permitted and Conditional uses are as indicated on the Use Chart in Section 622 of this Code.

E. Parking Requirements
Off-street parking requirements are as specified in Section 703 of this Code.

F. Building Heights
The height of any structure shall not exceed four stories or fifty-eight (58) feet, whichever is less. The Development Review Board may waive this requirement to no more than six stories or seventy-two (72) feet upon clear determination that the waiver is necessary for proper functioning of any permitted industrial use and that it will not adversely impact any surrounding properties.

G. Special Standards
Due to the unique characteristics of this district, the following special standards shall apply:
1. Additions not exceeding two thousand (2,000) square feet in area per story and which do not generate additional employees may be approved by Staff if the addition is not visible from any adjoining public street.
2. Additions not exceeding ten thousand (10,000) square feet in area may be approved by Staff, if following public notice of the project, a request for a public hearing is not received with fifteen (15) days of receipt of notice. The request shall be made in writing and shall state the basis for the request.
3. The addition of structures necessary for safety, fire protection or communications which do not exceed one thousand (1,000) square feet in area per story and are not more than sixty-five (65) feet in height may be approved by Staff.

SECTION 612: PLANNED EXPOSITION (PE)

A. Purpose

To provide an area for special events and exposition facilities while minimizing adverse traffic, sound and visual impacts. It is the intent of this district to encourage innovation in design and to encourage pedestrian, bicycle and bus access to such events.

B. Density/Lot Coverage

1. The minimum lot size shall be one hundred (100) acres.
2. The maximum total lot coverage shall be forty (40) percent.

C. Setback Requirements

1. For front yards abutting commercial districts the minimum setback shall be twenty (20) feet.
2. For front yards abutting residential districts the minimum setback shall be fifty (50) feet.
3. For side and rear yards abutting commercial districts the minimum setback shall be twenty (20) feet.
4. For side and rear yards abutting residential districts the minimum setback shall be fifty (50) feet.

D. Permitted and Conditional Uses

Permitted and Conditional uses are as indicated on the Use Chart in Section 622 of this Code.

E. Parking Requirements

Off-street parking requirements shall be specifically approved by the Development Review Board. Office uses shall meet the standards specified in "Professional Office" in Section 703(C). Other uses shall, at a minimum, meet the following standards:

1. One (1) space per three (3) seats in principal seating area or five (5) per one thousand (1,000) Square Foot of Gross Floor Area.
2. Outdoor events – One (1) space per ten (10) visitors.

F. Building Heights

The height of any structure shall not exceed thirty-five (35) feet; provided that the Development Review Board may waive this requirement for facilities constructed a minimum of one hundred (100) feet from any property line with Conceptual Plan and Site Plan review.

G. Exposition Center PUD

The Development Review Board may approve a Planned Unit Development for use as an Exposition Center. In connection with such PUD approval, the Development Review Board may authorize the construction of structures and facilities to accommodate any of the uses allowed in the Planned Exposition District. Development activity involving an Exposition Center PUD shall be reviewed under the provisions of this Subsection. For the purposes of this Code, an Exposition Center PUD shall be defined as the development of a parcel of land

with multiple buildings, vehicle parking areas and appurtenant facilities for the purpose of conducting indoor and outdoor exhibits, carnivals, fairs, concerts, trade shows and similar events.

1. Approval of an application for an Exposition Center PUD requires approval of a Conceptual Plan by the Development Review Board in accordance with the requirements of Section 511.C.
2. If the application involves the construction of new buildings or the alteration of existing buildings or facilities, Site Plan approval is also required; see section 502.F.
3. Submittal Requirements. In addition to the requirements for submittal of a Conceptual Plan specified in Section 511.C, a Conceptual Plan for an Exposition Center PUD shall contain the following:
   (a) The location and type of all permanent signs.
   (b) The location of areas proposed for temporary and permanent signs which are visible from any public street.
   (c) The general location of areas to be used for specific purposes or events, including parking.
   (d) The general location of permanent fencing, screening and landscaping, including a description of types of plant materials.
   (e) The general location of areas to be occupied by temporary structures, including distances between buildings and from structures to property lines. Temporary structures are those not staying in one location for more than two consecutive weeks or not served by water, sewer, and electric power connections.
   (f) The approximate location of any proposed roads, sidewalks or bike paths.
   (g) A proposed phasing schedule and map.
   (h) A description of methods used to estimate the impact of the proposed development on public infrastructure.
4. Standards of Review of Exposition Center PUD.
   (a) Physical characteristics of the site and relation to surrounding properties;
   (b) Relationship to major transportation facilities, including mass transit, walkways and bike paths;
   (c) Design characteristics of the proposal and compatibility to adjoining developed land;
   (d) Unique design or land planning characteristics;
   (e) Methods used to provide a transition between adjoining uses and proposed uses including, but not limited to, setbacks, screening, fencing, building design and parking design;
   (f) The preservation of unique natural physical characteristics;
   (g) Building design compatibility with adjoining structures; and
   (h) Other criteria, as deemed necessary by the Development Review Board, to evaluate the merits of a specific proposal.
5. Standards for Review of Temporary Activities in an Exposition Center PUD.
   (a) The size of the event;
   (b) The location of the event within the Planned Exposition District;

(c) Anticipated traffic impacts;
(d) Proposed hours of operation; and
(e) Conformance with performance standards in Section 718 of this Code.

6. Conditions. The Development Review Board may approve the proposed Exposition Center PUD with conditions designed to meet the standards established in Section 612 of this Code.

7. Classification and Approval of Activities. Plans for specific activities in an Exposition Center PUD shall be classified by the Community Development Department as permitted activities, temporary activities or major activities, and shall be reviewed in the following manner:

(a) Permitted activities. Permitted activities require no permits, provided that no new or temporary structures are proposed. The applicant shall notify Staff in writing, not less than two (2) days, excluding weekends and holidays, prior to the activity to ensure that additional review is not necessary. The following are permitted activities:

(i) Agriculture shows or exhibitions and related sales.
(ii) Educational workshops.
(iii) Special training, including driver's education, surveying techniques and similar training activities.
(iv) Reunions.
(v) Low intensity recreation activities.
(vi) Offices directly related to the Fairground's activities.
(vii) Storage facilities for equipment to be used for maintenance of any approved event or as a seasonal use.
(viii) Horse boarding.

(b) Temporary Activities. Temporary activities require staff review and approval. An application for a Temporary Use Permit shall be submitted in accordance with Section 502.D of this Code. In addition to the Temporary Use Permit standards, Staff shall review a temporary activity under the standards in Section 612.

(i) An application for a temporary activities permit may be submitted for a series of events over a one-year period (an annual permit application) or for individual events. Approval of an annual permit application shall not preclude application for and receipt of any number of single permits for events during the same year.
(ii) Annual permit applications shall be reviewed within twenty-one (21) days of receipt.
(iii) Single permit applications shall be reviewed within forty-eight (48) hours receipt.
(iv) The following shall be deemed temporary activities:

(aa) Antique shows;
(bb) Dog shows;
(cc) Car shows;
(dd) Craft shows;
(ee) Group sales (retail associations, car dealerships, clearance

sales or similar events);

(ff) Sales of products associated with another temporary or permitted event;

(gg) Concerts; and

(hh) Trade shows.

(c) Major Activities. The Development Review Board shall hold a public meeting in connection with review of a major activity, and may require a public hearing.

(i) Standards of review. The Development Review Board shall review each application for a major activity permit on its individual merits. Special consideration shall be given to mitigation efforts proposed to reduce potential community impacts. In granting such a permit, the Development Review Board may impose conditions regarding:

(aa) Time of the events;

(bb) Parking and traffic control measures;

(cc) Temporary off-site parking of recreational vehicles on public property;

(dd) Sound mitigation;

(ee) Location of the event within the District; and

(ff) Impacts which, in the opinion of the Development Review Board, are reasonable and will mitigate adverse impacts.

(ii) The following shall be deemed major activities;

(aa) Any event for which a permit has been denied by Staff;

(bb) Events which last more than five (5) days (excluding set-up and take-down);

(cc) Any event, which exceeds the performance standards specified in Section 718 of this Code.

(iii) Annual agricultural exhibitions shall be reviewed by staff on an annual basis and are classified as a major use. Staff may approve all activities specified below. The Development Review Board shall review any activity denied by Staff.

(aa) Normal Activities. Daily shows (other than grandstand shows), education workshops, product demonstrations, agricultural events, food services, booths, carnivals, and any activity within enclosed structures shall be considered as normal activities and shall not be individually reviewed.

(bb) Cumulative Effects. The cumulative effects of fair activities shall be reviewed annually with Staff, the Police Department and the applicant. Review is restricted to traffic control, lighting, parking, and sound abatement plans. Reasonable efforts shall be made to reduce potential adverse impacts of annual events. In the event that agreement is not reached, the Development Review Board shall consider the outstanding issues at a public meeting on the next Development Review Board agenda.

(cc) Special Events. Special events, including, but not limited to,

concerts, demolition derbies, tractor pulls and other grandstand events shall be reviewed for compliance with standards for sound, dust control, parking and traffic flow. Staff may not grant waivers to any standard included in this Code. If it is expected that sound standards may be exceeded, application shall be made to the City Council for a waiver in accordance with Section 506 of this Code. Staff may approve any special event, which does not exceed standards and may impose reasonable conditions regarding control of traffic, sound and dust. In addition, Staff may stipulate hours of operation to ensure conformance with adopted standards.

8. Signs. Signs in the Planned Exposition Center PUD shall be approved by the Development Review Board as part of Conceptual and/or Site Plan review.

(a) The Development Review Board shall consider the following:

(i) Compatibility with the Conceptual Plan.

(ii) Compatibility with the adjoining property.

(iii) Visual design.

(iv) Landscaping.

(v) Location and size.

(b) Specific types of signs which may be approved subject to the above, including a single sign with changeable messages to advertise events and signs near the streets to direct pedestrian, bicycle and vehicular traffic to appropriate entrances. The general location and type of Temporary signs shall be reviewed by the Development Review Board.

9. Expiration of Approvals. Approval for an Exposition Center PUD or approvals for any activities to be conducted at such PUD shall expire in accordance with terms set forth in the approval.

10. Appeals:

(a) Any interested person may appeal a decision of the Development Review Board regarding an Exposition Center PUD or conduct of a major activity at an Exposition Center PUD in accordance with the procedures set forth in Section 1707 below.

(b) Any interested person may appeal a decision of the Staff classifying an activity at an Exposition Center PUD to the Development Review Board in accordance with the procedures set forth in Section 1704 below.

SECTION 613: PLANNED AGRICULTURE (PA)

A. Purpose

To provide areas for active agricultural uses and provide mechanisms to ensure the long-term viability of agriculture. Prime agriculture or active farming land shall be preserved whenever possible through specific policies of the City. Property used for agricultural purposes shall be deemed the predominant use of land and shall be protected from the adverse effects of urban developments. If development is to occur, the preservation of

open space for agricultural or recreation purposes is important to the long-term environmental sustainability and quality of life in the district. Projects are reviewed on an overall project density basis to allow for the preservation of open space while achieving full build out. Open space networks and preservation of important natural resources should be integrated with new development in such a way as to allow for continued agricultural uses or emerging open space opportunities with responsible development.

B. Density/Lot Coverage

1. The minimum lot size shall be fifteen thousand (15,000) square feet.
2. The maximum total lot coverage shall be thirty (30) percent.

C. Setback Requirements

1. The minimum front yard setback shall be thirty (30) feet. The maximum front yard setback shall be the larger of the setbacks of the two adjacent lots (or the closest two lots on the same side of the same street). The principal structure closest to the street shall have a setback between the established maximum and minimum setback as described above. If the maximum setback is below the minimum setback as described above, the minimum setback shall prevail. Semi-attached accessory structures (such as a deck) shall be allowed if there is sufficient space between the principal structure and the minimum setback. Porches that are integrated into the principal structure shall be considered part of the principal structure. If a principal structure is not parallel to the front lot line, the setback will be determined by the average setback at the two corners of the structure closest to the front lot line. The Development Review Board may waive this requirement if the following conditions are met:
   (a) The proposed setback does not negatively impact the character of the neighborhood; and
   (b) The proposed setback would be in keeping with the setbacks and character of anticipated future development of the area.

   Applicants may apply for a variance if they do not meet the criteria above but believe they cannot meet the requirements of this Section.
2. The minimum side yard setback shall be ten (10) feet.
3. The minimum rear yard setback shall be ten (10) feet.

D. Permitted and Conditional Uses

Permitted and Conditional uses are as indicated on the Use Chart in Section 622.

E. Parking Requirements

Off-street parking requirements are as specified in Section 703 of this Code.

F. Building Height

1. Except as permitted in Section 613.F.3, building height for residential structures and accessory residential structures shall not exceed three (3) stories.
2. Structures utilized for normal agricultural activities shall have no height limitation.

3. In accordance with 24 V.S.A. § 4412, any affordable housing development, as defined in 24 V.S.A. § 4303(2), shall be permitted one additional floor for no more than four (4) stories, provided that the structure complies with the Vermont Fire and Building Safety Code.

G. Agriculture PUD

The Development Review Board may approve a Planned Unit Development for an Agriculture PUD, and in connection with such PUD approval, approve the structures and facilities to accommodate any of the uses allowed in the Planned Agriculture District. Any application for proposed development in the Planned Agriculture District may, at the applicant's request, be reviewed as an Agriculture PUD under the provisions of this Section in this District. All development applications involving more than three (3) units of housing shall be reviewed as an Agriculture PUD.

1. Applications shall be reviewed in accordance with the procedures set forth in Section 511. If the proposed Agriculture PUD includes new or altered buildings or facilities, Site Plan approval and/or Subdivision approval may be required.

2. Submittal requirements. In addition to the submittal requirements established in Section 511, applications for an Agriculture PUD shall include the following:

(a) The location and acreage of land to be reserved for agricultural purposes.

(b) Draft legal documents to ensure the continued availability of said lands for agricultural purposes in the future.

(c) A description and map of areas to receive transferred development rights, if any.

(d) A description of methods used to preserve agricultural lands other than the transfer of development rights, if applicable.

(e) Other information as needed to demonstrate compliance with the purpose of Section 613 of this Code.

3. A Conceptual Plan shall be submitted which includes, at a minimum, the following information:

(a) Location and acreage of all prime agricultural lands in single ownership.

(b) Location and acreage of all land proposed to be developed.

(c) Sending and receiving areas of all land proposed for transfer of development rights.

(d) Location of all land proposed for conservation of prime agricultural lands.

(e) Location and acreage of land proposed to be preserved as open space in perpetuity.

(f) Location and acreage of any lands to be transferred to qualified land trusts or non-profit organizations.

(g) Proposed phasing schedule.

(h) Proposed methods of preserving agriculture land.

4. Standards of Review. Generally, the Development Review Board shall consider the effect of the proposed development on the Community, public infrastructure and adjoining development. Mitigation efforts, including sound control, traffic control and landscaping shall be considered.

(a) General Review Standards

(i) Physical characteristics of the site and relation to surrounding properties.

(ii) Relationship to major transportation facilities, including mass transit, walkways and bike paths.

(iii) Design characteristics of the proposal and compatibility to adjoining developed land.

(iv) Unique design and land planning.

(v) Methods used to provide a transition between adjoining uses and proposed uses including, but not limited to, setbacks, screening, fencing, building design and parking design.

(vi) The preservation of unique natural physical characteristics.

(vii) Building design compatibility with adjoining structures.

(viii) Other criteria, as deemed necessary by the Development Review Board to evaluate the merits of a specific proposal.

(b) Specific Review Standards

(i) Amount of land to be preserved for agricultural purposes.

(ii) Location and type of all proposed uses.

(iii) The proposed design concept, including location and access to any non-agricultural open space.

(iv) Use of innovative techniques, including but not limited to, clustering, Zero Lot Lines development, purchase/leaseback arrangements, and the provision of amenities including biking and hiking trails.

(v) Proposed densities and location of any proposed multi-family dwelling units.

5. Density Bonuses. The Development Review Board may approve density increases for any Planned Agricultural proposal. Density shall be calculated on an overall project basis and allowable bonus density on developable land that is preserved may be applied elsewhere in a development.

(a) Standards. The Development Review Board shall consider the standards as specified below:

(i) The proposed density guarantees the preservation of agricultural lands.

(ii) The proposed development concept is of superior design and quality to a standard subdivision. The proposed development supports a walkable environment and pedestrian connectivity including pedestrian oriented design with attention to the relationship between blocks, lots, street, buildings and open spaces.

(iii) The proposal includes amenities, including but not limited to, pedestrian and bikeways, passive and active open spaces, energy efficient designs and alternative energy sources including renewable energy sources.

(iv) The provision of elderly housing.

(v) The provision of affordable housing.

(b) Bonuses. If the proposal clearly meets the intent of this District and preserves agricultural lands for either agricultural or recreational purposes, the applicant may request bonuses not to exceed the following:

(i) Total density bonus may not exceed an additional one hundred (100) percent of the base density on all developable land.

(ii) Twenty-five (25) percent density bonus for all preserved developable land, to be applied elsewhere on the site.

(iii) One (1) additional residential unit per unit that is perpetually affordable to households earning no more than eighty (80) percent of median income as allowed per district.

Any proposed development under Section 613.G.2 - Exceptions shall not qualify for density bonuses.

(c) Special Residential Standards. Upon approval and construction of any residential development, agricultural uses are prohibited in the developed area with the following exceptions:

(i) Specific agricultural uses which are approved by the Development Review Board as part of a Planned Unit Development Conceptual Plan shall be allowed.

(ii) Barbed wire fencing may be used to separate the agricultural activities from the boundaries of any residential subdivision.

(iii) Horse trails may be allowed as part of the proposed development.

(iv) Lots which are ten (10) acres or more in area may have agricultural uses, provided animals are not kept within twenty-five (25) feet of the property boundaries.

6. Conditions. The Development Review Board may approve the proposed Agriculture PUD with conditions designed to meet the standards established in Section 613 of this Code.

7. Expiration of Approval. An approval for an Agriculture PUD shall expire in accordance with terms set forth in the approval.

8. Appeal. Any interested person may appeal a decision of the Development Review Board regarding an Agriculture PUD in accordance with the procedures set forth in Section 1707 below.

SECTION 614: FLOOD PLAIN (FP)

A. Purpose

The purpose of this district, consistent with 10 V.S.A. § 751, is to:

1. Promote the public health, safety and general welfare;
2. Prevent increases in flooding caused by excessive development of land in flood hazard areas;
3. Minimize and prevent loss of life and property, disruption of commerce, impairment of the tax base, and extraordinary public expenditures and demands on public services that result from flooding and other flood related hazards;
4. Ensure that the City of Essex Junction and individuals remain eligible for federal flood

insurance, disaster recovery funds, and hazard mitigation funds as may be available.

B. Applicability

These regulations shall apply to all areas included in the FP Flood Plain District, or all lands identified as areas of special flood hazard at time of submittal of application on the most recently available Flood Insurance Rate Maps and in the most recently available Flood Insurance Studies published by the Federal Emergency Management Agency (FEMA), National Flood Insurance Program (NFIP), as provided by the Secretary of the Agency of Natural Resources (ANR) pursuant to 10 V.S.A. § 753, which are hereby adopted by reference and declared to be part of this code.

C. Warning And Disclaimer of Liability

This code does not imply that land outside of the areas covered by this bylaw will be free from flood or erosion damages. This code shall not create liability on the part of the City of Essex Junction or any municipal official or employee thereof, for any flood or erosion damages that result from reliance on this code, or any administrative decision lawfully made hereunder.

D. Permitted and Conditional Uses

Permitted uses within this district are restricted to agricultural and accessory uses and structures other than dwellings and/or commercial buildings. Conditional uses are limited to recreational facilities not involving the use of structures or flood control works.

E. Review Procedures

1. Prior to issuing a permit for the construction of new buildings, the substantial improvement of existing buildings, or for development in the floodway, a copy of the application shall be submitted to the Vermont Department of Water Resources and Environmental Engineering in accordance with 24 V.S.A. 4409. A permit may be issued only following receipt of comments from the Department or the expiration of 30 days from the date the application was mailed to the Department, whichever is sooner.
2. Adjacent communities and the Vermont Department of Water Resources and Environmental Engineering shall be notified at least 15 days prior to issuing any permit for the alteration or relocation of a watercourse and copies of such notification shall be submitted to the Administrator of the Federal Insurance Administration.
3. Proposed development shall be reviewed to assure that all necessary permits have been received from those governmental agencies from which approval is required by Federal or State Law.

F. Base Flood Elevations and Floodway Limits

1. Where available, the base flood elevations and floodway limits provided by the National Flood Insurance Program in the Flood Insurance Study and accompanying maps shall be used to administer the provisions of these regulations.
2. In areas where base flood elevations and floodway limits have not been provided by the National Flood Insurance Program, base flood elevation and floodway information available from State or Federal agencies or other sources shall be obtained

and reasonably utilized to administer the provisions of these regulations.

G. Development Standards

1. All development shall be designed to:
   (a) Minimize flood damage to the proposed development and to public facilities and utilities; and
   (b) To provide adequate drainage to reduce exposure to flood hazards.
2. Structures shall be:
   (a) Designed (or modified) and adequately anchored to prevent flotation, collapse, or lateral movement of the structure during the occurrence of the base flood;
   (b) Be constructed with material resistant to flood damage;
   (c) Be constructed by methods and practices that minimize flood damage; and
   (d) Be constructed with electrical, heating, ventilation, plumbing, and air conditioning equipment and other service facilities that are designed and/or located so as to prevent water from entering or accumulating within the components during conditions of flooding.
3. The flood carrying capacity within any altered or relocated portion of a watercourse shall be maintained.
4. New and replacement water supply and sanitary sewage systems shall be designed to minimize or eliminate infiltration of flood waters into the systems and discharges from the systems into flood waters.
5. On-site waste disposal systems shall be located to avoid impairment to them or contamination from them during flooding.
6. Replacement manufactured homes shall be:
   (a) elevated on properly compacted fill such that the top of the fill (the pad) under the entire manufactured home is above the base flood elevation.
   (b) properly anchored to resist flotation, collapse, or lateral movement.
7. Development within the floodway is prohibited unless a registered professional engineer certifies that the proposed development will not result in any increase in flood levels during the occurrence of the base flood.
8. The lowest floor, including basement, of all new buildings shall be at least one foot above the base flood elevation.
9. Existing buildings to be substantially improved for residential purposes shall be modified or elevated to meet the requirements of Subsection 8 (above).
10. Existing buildings to be substantially improved for non-residential purposes shall either:
    (a) Meet the requirements of Subsection 8 (above); or
    (b) Be designed to be watertight below the base flood elevation with walls substantially impermeable and with structural components having the capability of resisting hydrostatic and hydro-dynamic loads and effects of buoyancy. A permit for a building proposed to be flood proofed shall not be issued until a registered professional engineer or architect has reviewed the structural design, specifications and plans, and has certified that the design and proposed methods of construction are in accordance with accepted standards of practice for

meeting the provisions of this Subsection.

11. Junkyards and storage facilities for floatable materials, chemicals, explosives, flammable liquids, or other hazardous or toxic materials, are prohibited within the floodway. These facilities may be permitted outside the floodway, provided the area is filled to at least one foot above the base flood elevation.

12. For all new construction and substantial improvements, fully enclosed areas below the lowest floor that are usable solely for parking of vehicles, building access or storage in an area other than a basement and that are subject to flooding shall be designed to automatically equalize hydrostatic flood forces on exterior walls by allowing for the entry and exit of floodwaters. Designs for meeting this requirement must either be certified by a registered professional engineer or architect or meet or exceed the following minimum criteria: A minimum of two openings having a total net area of not less than one square inch for every square foot of enclosed area subject to flooding shall be provided. The bottom of all openings shall be no higher than one foot above grade. Openings may be equipped with screens, louvers, valves, or other coverings or devices provided that they permit the automatic entry and exit of floodwaters.

13. Recreational vehicles placed on sites within Zones A1-A30, AH and AE shall either:

(a) Be on the site for fewer than 180 consecutive days;

(b) Be fully licensed and ready for highway use; or

(c) Meet all standards of Section 603(B)(1) of the National Flood Insurance Program Regulations and the elevation and anchoring requirements for "manufactured homes" of Section 603(C)(6).

H. Duties and Responsibilities of Staff

The Administrative Officer shall maintain records of:

1. All permits issued for development in areas of special flood hazard.

2. The elevation, in relation to mean sea level, of the lowest floor, including basement, of all new or substantially improved buildings.

3. The elevation, in relation to mean sea level, to which buildings have been flood proofed.

4. All flood-proofing certifications required under this regulation.

5. All variances and justification for their issuance.

I. Variances to the Development Standards

Variances shall be granted by the Development Review Board only:

1. In accordance with the provision of 24 V.S.A. Section 4469.

2. Upon a determination that during the base flood discharge the variance will not result in increased flood levels.

3. Upon a determination that the structure or other development is protected by methods that minimize flood damage during the base flood and create no additional threats to public safety.

SECTION 615: MIXED COMMERCIAL USE DISTRICT (MCU)

A. Purpose

To provide areas for mixed use development in locations which have adequate public and compatible surrounding land uses. A mix of residential, retail and office use is encouraged.

B. Lot Size/Lot Coverage

1. The minimum lot size shall be fifteen thousand (15,000) square feet. The Mixed Commercial Use District shall not have a maximum allowable density. The maximum number of dwelling units shall be determined by the ability to meet the standards of the Land Development Code including, but not limited to, parking, setbacks, lot coverage and building height.
2. The maximum total lot coverage shall be sixty-five (65) percent; the sixty-five (65) percent lot coverage may be increased up to eighty (80) percent through a waiver process granted by the Development Review Board using the same criteria outlined in Section 601.G.

C. Setback Requirements

1. The minimum front yard setback shall be fifteen (15) feet.
2. The minimum side yard setback shall be ten (10) feet.
3. The minimum rear yard setback shall be ten (10) feet.

D. Permitted and Conditional Uses

Permitted and Conditional uses are as indicated on the Use Chart in Section 622 of this Code.

E. Parking Requirements

Off-street parking requirements are as specified in Section 703 of this Code.

F. Building Height.

1. Except as permitted in Section 615.F.2, building heights shall not exceed four (4) stories or fifty-eight (58) feet, whichever is less.
2. In accordance with 24 V.S.A. § 4412, any affordable housing development, as defined in 24 V.S.A. § 4303(2), shall be permitted one additional floor for no more than five (5) stories or seventy-two (72) feet, whichever is less, provided that the structure complies with the Vermont Fire and Building Safety Code.

G. Planned Unit Development

Any application for proposed development in the Mixed Commercial District may, at the applicant's request, be reviewed as a Planned Unit Development under the provisions of Sections 511 and 723.

SECTION 616: PROFESSIONAL OFFICE OVERLAY DISTRICT

A. Purpose

A Professional Office Development Overlay District is to allow for the development of office buildings within areas of existing offices, and as designated on the Future Land Use Map in the Essex Junction Comprehensive Plan.

B. Review

All proposed Professional Office Developments shall require a hearing before the Development Review Board. The Development Review Board shall consider the following criteria and may establish conditions as deemed necessary to meet the purposes of this Section.

1. Compatibility with surrounding office uses.
2. Hours of operation.
3. The proposed use will not interfere with or alter the residential uses of adjoining properties.
4. Permitted Uses. Specific uses shall be determined by the Development Review Board upon review of an application and finding that the proposal meets all the criteria of this Section. However, retail and industrial uses shall not be allowed. Residential uses shall be allowed as a Conditional use. The residential density shall not exceed ten (10) units per acre.

C. Conditions

The Development Review Board may establish conditions as deemed necessary to mitigate impacts of a proposed Professional Office Development.

D. Site Plan

In addition to the Site Plan Standards specified in this Code, the Development Review Board review the following:

1. Lighting shall not negatively impact adjoining residential properties and the use of flood lighting is expressly prohibited.
2. Parking areas shall be screened from view from adjoining residential properties.
3. All structures shall be designed to be compatible in construction with adjoining structures.
4. Proposed signs shall be specifically approved.

SECTION 617: NORTH LINCOLN STREET OVERLAY DISTRICT (NLSO)

A. Purpose

The North Lincoln Street Overlay District is intended to allow additional land uses beyond those allowed by the underlying zoning district due to the fact that the properties within this district are not served by municipal sewer and the property is relatively isolated.

B. Permitted Uses
Uses allowed in the NLSO shall be those uses identified in Section 622 Use Chart, including all uses identified in both the NLSO and the underlying zoning district.

C. Dimensional Standards
Development within the NLSO shall meet the dimensional requirements of the underlying zoning district including setbacks, lot coverage and building height.

D. Density
The allowable residential density in the NLSO shall be established by the underlying zoning district.

SECTION 618: RESIDENTIAL 1 (R1)

A. Purpose
To provide areas for large lot single family residential dwellings and accessory uses.

B. Lot Size/Lot Coverage
1. The minimum lot size shall be fifteen thousand (15,000) square feet.
2. The maximum total lot coverage shall be forty (40) percent. However, the maximum permitted lot coverage for buildings shall not exceed thirty (30) percent.
3. No more than two (2) principal buildings shall be allowed per lot, unless approved as part of a Planned Development.

C. Setback Requirements
1. The minimum front yard setback shall be twenty (20) feet. The maximum front yard setback shall be the larger of the setbacks of the two adjacent lots (or the closest two lots on the same side of the same street). The principal structure closest to the street shall have a setback between the established maximum and minimum setback as described above. If the maximum setback is below the minimum setback as described above, the minimum setback shall prevail. Semi-attached accessory structures (such as a deck) shall be allowed if there is sufficient space between the principal structure and the minimum setback. Porches that are integrated into the principal structure shall be considered part of the principal structure. If a principal structure is not parallel to the front lot line the setback will be determined by the average setback at the two corners of the structure closest to the front lot line. The Development Review Board may waive this requirement if the following conditions are met:
   (a) The proposed setback does not negatively impact the character of the neighborhood; and
   (b) The proposed setback would be in keeping with the setbacks and character of anticipated future development of the area.
2. The minimum side yard setback shall be eight (8) feet.
3. The minimum rear yard setback shall be twenty-five (25) feet.

D. Maximum Number of Dwelling Units
The maximum number of dwelling units on any individual lot shall be four (4).

E. Permitted and Conditional Uses
Permitted and Conditional uses are as indicated on the Use Chart in Section 622 of this Code. A principal structure may contain any use identified on the Use Chart in Section 622 for the R1 zoning district.

F. Parking Requirements
Off-street parking requirements are as specified in Section 703 of this Code.

G. Building Height
Building heights shall not exceed three (3) stories or thirty-five (35) feet, whichever is less.

H. Special Standards
To encourage architectural styles compatible with the other buildings within the district and to encourage parking to be located at the side or rear of residential properties:

1. For the principal building closest to the street, at least one dwelling unit must have a primary pedestrian entrance facing the street.
2. Parking and Driveways in this district are subject to the following standards:
   (a) In the area between the street and three (3) feet beyond the front property line (Area A in the diagram below), the maximum width of the driveway is determined by Section 705 of this code.
   (b) In the area between three (3) feet beyond the front property line and the front of the Principal Building closest to the street (Area B in the diagram below), outdoor parking spaces and any portion of the driveway used for parking shall not take up more than thirty (30) percent or 20 (twenty) feet of the linear frontage of the lot, whichever is more.
   (c) In the area behind the front of the Principal Building closest to the street (Area C in the diagram below), outdoor parking spaces and any portion of the driveway used for parking shall not take up more than thirty (30) percent or 20 (twenty) feet of the linear frontage of the lot, whichever is more unless the width in excess of this limit is screened from view from the street. Screening shall be provided by buildings, other opaque structure, or hedges not less than six (6) feet in height. Any hedges planted for this purpose shall be of sufficient size and density to block vision at eye level within two (2) years of planting.

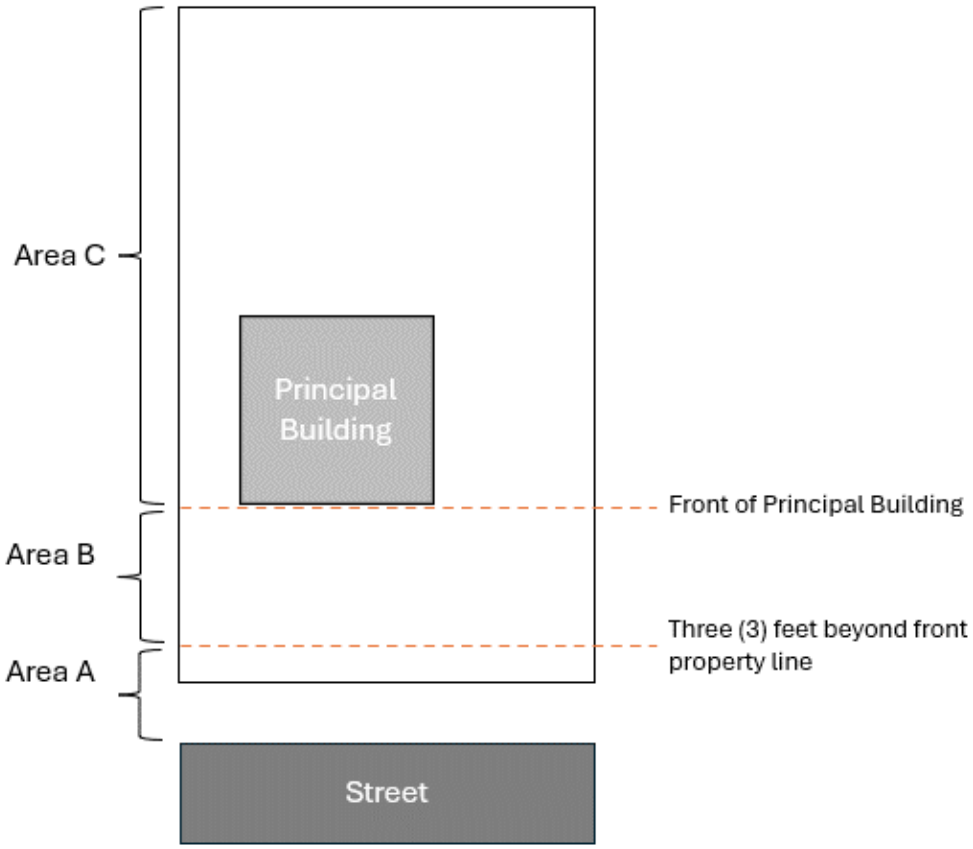

3. On double-frontage lots, these special standards are only applied to one frontage.

SECTION 619: RESIDENTIAL 2 (R2)

A. Purpose
To provide areas for high-density single family residential development and accessory uses.

B. Lot Size/Lot Coverage
1. The minimum lot size shall be seven thousand five hundred (7,500) square feet.
2. The maximum total lot coverage shall be forty (40) percent. However, the maximum permitted lot coverage for buildings shall not exceed thirty (30) percent.
3. No more than two (2) principal buildings shall be allowed per lot, unless approved as part of a Planned Development.

C. Setback Requirements
1. The minimum front yard setback shall be fifteen (15) feet. The maximum front yard setback shall be the larger of the setbacks of the two adjacent lots (or the closest two lots on the same side of the same street). The principal structure closest to the street shall have a setback between the established maximum and minimum setback as described above. If the maximum setback is below the minimum setback as described above, the minimum setback shall prevail. Semi-attached accessory structures (such as

a deck) shall be allowed if there is sufficient space between the principal structure and the minimum setback. Porches that are integrated into the principal structure shall be considered part of the principal structure. If a principal structure is not parallel to the front lot line the setback will be determined by the average setback at the two corners of the structure closest to the front lot line.

The Development Review Board may waive this requirement if the following conditions are met:

(a) The proposed setback does not negatively impact the character of the neighborhood; and

(b) The proposed setback would be in keeping with the setbacks and character of anticipated future development of the area.

2. The minimum side yard setback shall be eight (8) feet.

3. The minimum rear yard setback shall be twenty-five (25) feet for principal structures and fifteen (15) feet for accessory structures or parking spaces.

D. Maximum Number of Dwelling Units

The maximum number of dwelling units on any individual lot shall be four (4).

E. Permitted and Conditional Uses

Permitted and Conditional uses are as indicated on the Use Chart in Section 622 of this Code. A principal building may contain any use identified on the Use Chart in Section 622 for the R2 zoning district.

F. Parking Requirements

Off-street parking requirements are as specified in Section 703 of this Code.

G. Building Height

Building heights shall not exceed three (3) stories or thirty-five (35) feet, whichever is less.

H. Special Standards

To remain at similar existing densities in this district as the Comprehensive Plan calls for:

1. For the principal building closest to the street, at least one dwelling unit must have a primary pedestrian entrance facing the street.
2. Parking and Driveways in this district are subject to the following standards:
   (a) In the area between the street and three (3) feet beyond the front property line (Area A in the diagram below), the maximum width of the driveway is determined by Section 705 of this code.
   (b) In the area between three (3) feet beyond the front property line and the front of the Principal Building closest to the street (Area B in the diagram below), outdoor parking spaces and any portion of the driveway used for parking shall not take up more than thirty (30) percent or 20 (twenty) feet of the linear frontage of the lot, whichever is more.
   (c) In the area behind the front of the Principal Building closest to the street (Area

C in the diagram below), outdoor parking spaces and any portion of the driveway used for parking shall not take up more than thirty (30) percent or 20 (twenty) feet of the linear frontage of the lot, whichever is more unless the width in excess of this limit is screened from view from the street. Screening shall be provided by buildings, other opaque structures, or hedges not less than six (6) feet in height. Any hedges planted for this purpose shall be of sufficient size and density to block vision at eye level within two (2) years of planting.

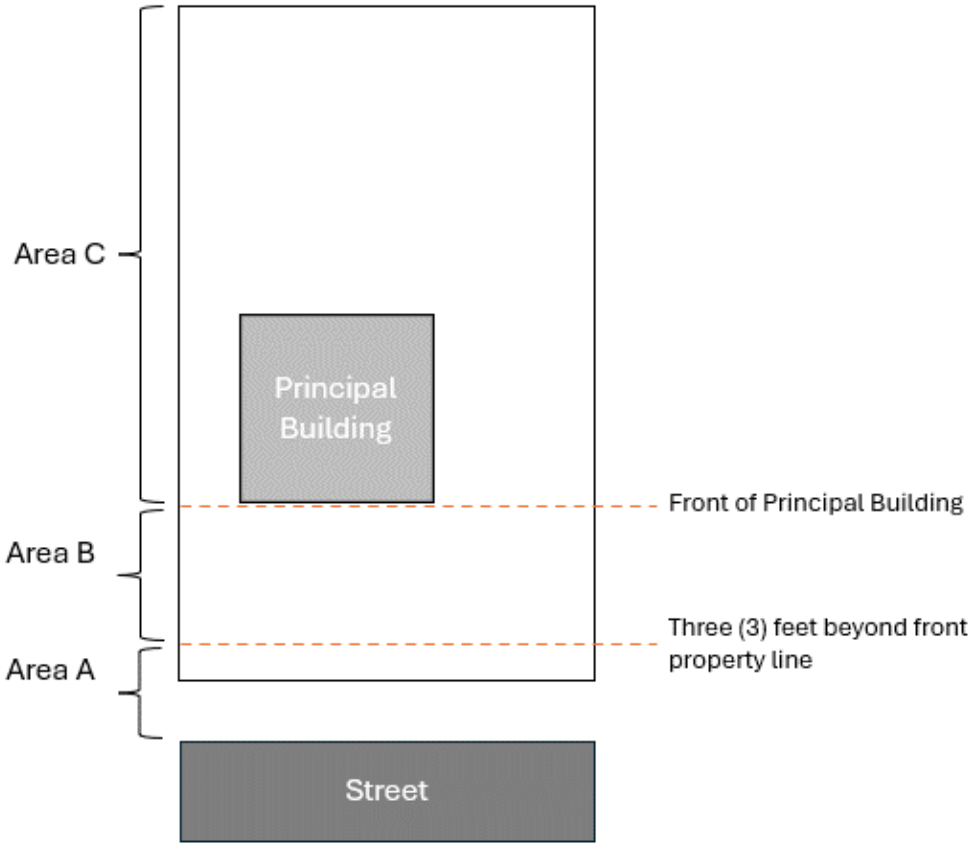

3. On double-frontage lots, these special standards are only applied to one frontage.

SECTION 620: DESIGN REVIEW OVERLAY DISTRICT (DRO)

A. Purpose

The purpose of the Design Review Overlay District is to expand the design review standards used in the Village Center District into the trunk routes of Main Street, Lincoln Street, Pearl Street, Park Street and Maple Street as called for in the Comprehensive Plan; thereby recognizing the economic importance and unique historic qualities of the existing buildings and neighborhoods. The purpose of these standards is to:

1. Enable infill and redevelopment that brings opportunities to protect existing historic resources and provide new sources of architectural and urban design for the 21st century while increasing density, activity and economic opportunity.
2. Carryout the concepts of the Design Five Corners Plan which are to

accommodate infill development while calming traffic and reclaiming more space for people.

3. Establish a pedestrian friendly atmosphere from the surrounding neighborhoods into the Village Center.

B. Applicability

These standards are in addition to the underlying standards of the base zoning district. The design review standards in Section 620.D. are applicable to any new construction, proposed additions, demolition or reconstruction of existing buildings within the Design Review and Historic Preservation Overlay District. Regular maintenance, exterior alterations and change of use are exempt. Regarding demolition the intent is for the Administrative Officer or Development Review Board to review the plan for reconstruction for conformance with this section prior to demolition.

C. Design Review Procedures

The Development Review Board may deny approval of a proposed development or modification of a structure if it determines that the intent of this Section has not been met. Accordingly:

1. Design review from the Development Review Board will be conducted in conjunction with subdivision or site plan approval. If subdivision or site plan review is not otherwise required, design review shall be conducted in accordance with site plan review procedures under Section 502 or Section 503. All reviews shall be conducted at a public meeting.
2. Nothing in these design control criteria shall be construed to prevent the ordinary maintenance or repair of any exterior architectural feature in the district, which does not involve a change in the design, material, color or the outward appearance of the feature.
3. The review of plans under this Section by the Development Review Board requires the submission of information listed in Section 502 or Section 503 along with building elevations, a description of materials to be used on the exterior of any structure, plans for exterior lighting, signs, drainage and snow removal, and photographs of existing structures and adjacent buildings if applicable. The Development Review Board may require additional information and documentation, as it deems necessary including 3D drawings and/or models of the proposal to assist in understanding the fundamental design elements and important spatial relationships.
4. Should the Development Review Board deem it necessary to employ an architect or other qualified individual to review any development proposal, the cost of employing such an individual shall be borne by the applicant.

D. Design Review Standards

The Development Review Board shall review applicable development applications in the Design Review Overlay District for compliance with the criteria listed below and in accordance with the character of the underlying district as defined by the Essex Junction Comprehensive Plan.

1. The relationship of building mass and architectural detail to open space and to the relative size of a person shall be reviewed by the Development Review Board in this District.
2. The predominant direction of structural shape, of placement of openings and architectural details at the front façade shall be harmonious with the core principles of a designated Village Center District.
3. Building setback and height requirements of the underlying zoning district shall apply. However, variation along the frontage may be permitted by the Development Review Board to:
   (a) Create a consistent street edge and sense of enclosure.
   (b) Provide for an expansion of the sidewalk or active pedestrian space such as sidewalk cafes or display areas.
4. Bicycle paths which connect neighborhoods shall be constructed in accordance with planned facilities mapped in the Comprehensive Plan on Map 6: Non-Motorized Transportation, or in conformity to a Bicycle Plan as approved by the Development Review Board.
5. Site features and design shall promote cycling, walking and transit as a viable means of transportation and recreation for residents, consumers, visitors, and employees. As appropriate to the location of the application, features shall include at least two or more of the following, or similar amenity with approval from the Development Review Board:
   (a) Pedestrian access directly from the building to the public sidewalk;
   (b) Pocket park with benches or similar amenities between the public realm and the private building (see image box for examples to help clarify the intent of this requirement);
   (c) Public art, murals or interactive games;
   (d) Covered bus shelter; and
   (e) Shade trees.

Below: Public Realm Amenity examples for Section 620.D.5. These images are provided as illustrations of intent.

All images herein are from *Seven Catalytic Placemaking Strategies: A Discussion about the Future of Vermont Downtowns* by Fred Kent, Kathy Madden and Amy Tomasso.

url: https://www.sociallifeproject.org/rural-placemaking-vermont-downtowns/

6. The following architectural elements or features shall be harmonious with existing buildings and significant, predominant or established patterns in the district:
   (a) The relationship between the width to height of the front elevation of the building.
   (b) The relationship of width to height of windows and doors.

(c) The rhythmic relationship of openings to solid areas in front façades.
(d) The spaces between the proposed structure or structural alteration.
(e) The relationship of entranceways to buildings and porches.
(f) The materials, textures, and colors, including primary and accent or trim colors.
(g) Proposed architectural details (such as lintels, arches, chimneys).
(h) Proposed roof shapes and lines.
(i) Proposed enclosures, including fences, brick walls, stone walls, evergreen hedgerows and building facades, which are also continuous and cohesive with existing walls in the district.
(j) Proposed landscaping shall be compatible with existing quality and quantity of landscaping in the vicinity, with consideration given to existing landscape mass and continuity.
(k) The proposed ground cover shall be compatible with the predominant ground cover in the district.
(l) Storage areas, service areas, trash receptacles, accessory structures and parking areas shall be screened from view from the street and adjoining properties.

SECTION 621: HISTORIC PRESERVATION OVERLAY DISTRICT (HRO)

A. Purpose

The purpose of the Historic Preservation Overlay District is to expand the historic preservation standards used in the Village Center District into the trunk routes of Main Street, Lincoln Street, Pearl Street, Park Street and Maple Street as called for in the Comprehensive Plan; thereby recognizing the economic importance and unique historic qualities of the existing buildings and neighborhoods. The purpose of these standards is to:

1. Protect those buildings listed or eligible for the State or Federal Register of Historic Places while accommodating new and appropriate infill and redevelopment supporting increased density and multi-modal development.
2. Enable infill and redevelopment that brings opportunities to protect existing historic resources and provide new sources of architectural and urban design for the 21st century while increasing density, activity and economic opportunity.

B. Applicability

These standards are in addition to the underlying standards of the base zoning district. The historic preservation design standards in Section 620.D.2. of this Code are applicable to demolition, alterations, additions or redevelopment of buildings within the Design Review and Historic Preservation Overlay District and structures on Map 2 in the Comprehensive Plan ((https://www.essexjunction.org/fileadmin/files/Planning_Zoning/Map2_Historic_Sites_20190130.pdf),or listed on the State or National Registers of Historic Places. The following buildings are exempt:

1. Buildings that have been de-listed or determined by the Vermont Division for Historic Preservation for state and federal regulatory program purposes to not meet

the State Register Criteria for Evaluation and are not eligible for listing in the State Register of Historic Places.

2. Buildings where the historical significance has been compromised and is no longer relevant. A letter must be provided by a qualified Historic Preservation consultant stating this case.

C. Historic Preservation Procedures

The Development Review Board may deny approval of a proposed development or modification of a structure if it determines that the intent of this Section has not been met. Accordingly:

1. Historic Preservation review from the Development Review Board will be conducted in conjunction with subdivision or site plan approval. If subdivision or site plan review is not otherwise required, design review shall be conducted in accordance with site plan review procedures under Section 502 or Section 503. All reviews shall be conducted at a public meeting.

2. Nothing in these Historic Preservation standards shall be construed to prevent the ordinary maintenance or repair of any exterior architectural feature in the district, which does not involve a change in the design, material, color or the outward appearance of the feature.

3. The review of plans under this Section by the Development Review Board requires the submission of information listed in Section 502 or Section 503 along with building elevations, a description of materials to be used on the exterior of any structure, plans for exterior lighting, signs, drainage and snow removal, and photographs of existing structures and adjacent buildings if applicable. The Development Review Board may require additional information and documentation, as it deems necessary including 3D drawings and/or models of the proposal to assist in understanding the fundamental design elements and important spatial relationships.

4. Should the Development Review Board deem it necessary to employ an architect or other qualified individual to review any development proposal, the cost of employing such an individual shall be borne by the applicant.

D. Historic Preservation Standards

The Development Review Board shall review applicable development applications in the Historic Protection Overlay District for compliance with the criteria listed below and in accordance with the character of the underlying district as defined by the Essex Junction Comprehensive Plan. Staff will review the applicant's proposal and provide guidance as to what the Development Review Board will expect with historic structures. The following Secretary of the Interiors Standards for the Rehabilitation of Historic Structures shall apply:

1. An existing property shall be used for its historic purpose or be placed in a new use that requires minimal change to the defining characteristics of the building and its site and environment.
2. The historic character of a property shall be retained and preserved. The removal of historic materials or alteration of features and spaces that characterize a property shall be avoided.

3. Each property shall be recognized as a physical record of its time, place, and use. Changes that create a false sense of historical development, such as adding conjectural features or architectural elements from other buildings, shall not be undertaken.
4. Most properties change over time; those changes that have acquired historic significance in their own right shall be retained and preserved.
5. Distinctive features, finishes, and construction techniques or examples of craftsmanship that characterize a property shall be preserved.
6. Deteriorated historic features shall be repaired rather than replaced. Where the severity of deterioration requires replacement of a distinctive feature, the new feature shall match the old in design, color, texture, and other visual qualities and, where possible, materials. Replacement of missing features shall be substantiated by documentary, physical, or pictorial evidence.
7. Chemical or physical treatments, such as sandblasting, that cause damage to historic materials shall not be used. The surface cleaning of structures, if appropriate, shall be undertaken using the gentlest means possible.
8. Significant archeological resources affected by a project shall be protected and preserved. If such resources must be disturbed, mitigation measures shall be undertaken.
9. New additions, exterior alterations, or related new construction shall not destroy historic materials that characterize the property. The new work shall be differentiated from the old and shall be compatible with the massing, size, scale, and architectural features to protect the historic integrity of the property and its environment.
10. New additions and adjacent or related new construction shall be undertaken in such a manner that if removed in the future, the essential form and integrity of the historic property and its environment would be unimpaired.

E. Demolition of Historic Structures

The demolition of listed, or properties eligible for historic listing is discouraged and it is the intent of this section to limit the demolition of historic structures unless the following standards are met. The intent of this section is to provide a procedure for the review of applications for the demolition of a historic structure. The Development Review Board may require professional assistance in evaluating an application for demolition at the applicants' expense to determine compliance with the standards of this section. An application for demolition of a historic structure will be reviewed based on financial, structural, historic, design and community benefits of the proposed redevelopment.

(1) Application for Demolition

(a) A report from a licensed engineer qualified to assess the structural integrity of historic buildings is required. The report shall address the ability for rehabilitation and reuse of the existing building as it pertains to the building's structural integrity and cost of rehabilitation.

(b) A report from a qualified professional (planner, economist, business consultant) on the economic feasibility to rehabilitate and/or operate the

historic building or site while preserving its historic qualities. The report, at the request of the Development Review Board, may require the report to assess options for sensitive building expansions as it pertains to the economic viability of the building.

(c) A statement from the applicant regarding compliance with the standards for demolition of a historic structure.

(d) Any building in non-compliance with the design requirements for historic structures as a result of a fire, flood or similar unforeseen event shall apply within six months of the date of the event for an application to demolish the building or approval of a plan for restoration. All of the standards in this section shall be fully considered including economic hardship, structural integrity and community benefit.

(2) Demolition Review Standards:

(a) Economic Hardship. The continued operation of the historic structure is financially infeasible based on existing and potential land uses and any costs of rehabilitation. All options for adaptive reuse, resale, or relocation shall be considered and addressed in the application.

(b) Structural Integrity. The structure is beyond repair or the cost of repairing and operating the building is not financially feasible or reasonable; or

(c) Community Benefit. The redevelopment plan for the site has significant state, regional or community benefits in terms of urban design, ecology, and cultural or economic benefits. The redevelopment proposal shall consider and address impacts on adjacent historic properties and the entire district. The potential of incorporating historic structures into redevelopment plans shall be considered and is encouraged.

(3) Approval for Demolition. Historic buildings that are approved for demolition require the applicant to comply with the following:

(a) Any approval for the demolition of a historic structure shall require the applicant to document the building in accordance with the Historic American Building Survey (HABS).

(b) Assurance from the applicant that the redevelopment plan as approved will be implemented if the historic structure demolition is approved based on the community benefit of the redevelopment plan. In addition, structures approved for demolition based on the community benefit shall not be demolished until construction of the entire project has received all financial resources and regulatory permits. The Development Review Board may require a bond or letter of credit as a condition of approval for the demolition of a historic structure.

(c) The time between demolition and the commencement of construction shall not exceed 3 months unless an alternative timeline is specifically approved as part of the demolition approval from the Development Review Board.

SECTION 622: USE CHART

A. District Abbreviations

For the purposes of this Code, and for the chart presented in this Section, the zoning districts shall have the following abbreviations:

1. Multi-Family Residential 1 District (MF1).
2. Multi-Family Residential 2 District (MF2).
3. Multi-Family Residential 3 District (MF3).
4. Village Center District (VC).
5. Highway-Arterial (HA)
6. Multi-Family/Mixed Use-1 District (MF-MU1)
7. Multi-Family/Mixed Use-2 District (MF-MU2)
8. Transit Oriented Development (TOD)
9. Residential-Office District (RO).
10. Open Space (OS)
11. Light Industrial District (LI).
12. Planned Exposition District (PE).
13. Planned Agriculture District (PA).
14. Flood Plain District (FP).
15. Mixed Commercial Use District (MCU).
16. Professional Office Overlay District
17. North Lincoln Street Overlay District (NLSO).
18. Residential 1 District (R1).
19. Residential 2 District (R2).
20. Design Review Overlay District (DRO)
21. Historic Preservation Overlay District (HRO)

B. Permitted Uses

Uses considered to be permitted uses in each district are marked with an "X".

C. Conditional Uses

Uses considered to be conditional uses in each district are marked with a "C".

D. Special Uses

Uses which are generally permitted; but require specific reviews or approvals by the Development Review Board to determine applicability at a specific location are marked with an "S".

E. Prohibited Uses

Uses which are listed but not marked with an “X”, “C”, or “S” are considered to be prohibited uses within each district.

F. Uses not Specified in Use Chart

Uses, which do not fall under a definition of one of the uses specified in the Use Chart

below, shall be reviewed in accordance with Sections 502.B and Section 502.C of this Code.

G. The Use Chart

The following chart indicates uses specifically allowed within each district. Qualifications and other additional requirements can be found in the applicable zoning district standards elsewhere in this Code.

DISTRICT / USE	R1	R2	MF1	MF2	MF3	MCU	LI	MF-MU1	MF-MU2	NLSO	TOD	HA	RO	VC	PE	PA	OS
SINGLE FAMILY DWELLING	X	X	X	X	X	X		X	X				X	X		X	
TWO FAMILY DWELLING	X	X	X	X	X	X		X	X				X	X		X	
THREE FAMILY DWELLING	X	X	X	X	X	X		X	X		X		X	X		X	
FOUR FAMILY DWELLING	X	X	X	X	X	X		X	X		X		X	X		X	
MULTI-FAMILY DWELLING			X	X	X	X		X	X		X	X		X		X	
AGRICULTURE																X	
AGRICULTURE PRODUCTS SALES															S	X	
ANIMAL BOARDING FACILITY															C	X	
ANIMAL EXHIBITS															S	C	
ANIMAL SHELTER	X	X	X	X	X	X	X			X			X		X	X	
ANTENNA TOWER							X										
BANK						X		X	X		X	X		X			
BANK W/ DRIVE THROUGH						X		X	X		X	X					
BED AND BREAKFAST	X	X	X	X	X	X		X	X		X	X	X	X		X	
BOARDING HOUSE	C	C	C	C	C	X		C	C		X	C	C	X			
BUILDING MATERIALS ESTABLISHMENT						X	X			X		X					
BUSINESS SERVICE						X		X	X		X	X	C	X		X	

DISTRICT / USE	R1	R2	MF1	MF2	MF3	MCU	LI	MF-MU1	MF-MU2	NLSO	TOD	HA	RO	VC	PE	PA	OS
CANNABIS RETAIL ESTABLISHMENT											X	X					
CANNABIS WHOLESALE ESTABLISHMENT											X	X					
CANNABIS MEDICAL DISPENSARY											X	X					
CANNABIS CULTIVATOR ESTABLISHMENT																X	
CANNABIS MANUFACTURING ESTABLISHMENT (TIER 1)	X	X	X	X	X	X		X	X		X	X	X	X			
CANNABIS MANUFACTURING ESTABLISHMENT (TIERS 2 & 3)							X										
CANNABIS TESTING LABORATORY ESTABLISHMENT							X										
CAR WASH, INCIDENTAL															S		
CAR WASH												X					
CATERING SERVICES						X	C	X	X		X	X	C	X			
CIRCUS, CARNIVAL						X									S		
CLINIC, MEDICAL						X	X	X	X	X	X	X		X			
CLINIC, VETERINARY						X		X	X		X	X				X	
CONGREGATE HOUSING	C	C	X	X	X	X		X	X		X		X	X		X	
CONSTRUCTION SERVICES ESTABLISHMENT						X	X				C						
CULTURAL FACILITY						X		X	X		X	X	S	X	S		
DAY CARE HOME	X	X	X	X	X	X		X	X		X	X	X	X		X	

DISTRICT / USE	R1	R2	MF1	MF2	MF3	MCU	LI	MF-MU1	MF-MU2	NLSO	TOD	HA	RO	VC	PE	PA	OS
DAY CARE FACILITY	X	X	X	X	X	X	X	X	X		X	X	X	X	X	X	
DORMITORY						X		X	X		S	X		C			
DRY CLEANER						X	X	X	X		X	X					
EATING ESTABLISHMENT DRIVE THROUGH											X	X					
EATING AND DRINKING ESTABLISHMENT						X	X	X	X		X	X		X	S		
FAMILY CARE HOME	X	X	X	X	X	X		X	X		X	X	X	X		X	
FAMILY CARE FACILITY	C	C	C	C	C	C	C	X	X		S	X	C	C	C	C	
FLEA MARKET						X				X					X		
FREIGHT RAIL DISTRIBUTION CENTER							X										
FUNERAL HOME						X				X			C	X			
GAS PUMPS											C	C					
GROUP HOUSING	C	C	C	C	C	X				X				X			
HOME OCCUPATION	X	X	X	X	X	X		X	X		X	X	X	X			
HOTEL, MOTEL – EXTENDED STAY						X		X	X		X	X		X	C		
HOTEL, MOTEL						X		X	X		X	X		X	C		
JUNK YARD																	
LANDFILL COLLECTION SITE							C									C	

DISTRICT / USE	R1	R2	MF1	MF2	MF3	MCU	LI	MF-MU1	MF-MU2	NLSO	TOD	HA	RO	VC	PE	PA	OS
LANDSCAPE SERVICE						X	X			X						X	
MAIL SERVICES						X		X	X		X	X		X			
MANUFACTURING - LIGHT						C	X				X	X					
MANUFACTURING - HEAVY							C										
MASSAGE THERAPY	C	C	C	C	C	C		C	C		C	C	C	C		C	
MEDICAL AND DENTAL LAB						C	X	C	C		X	X	C	C			
MINI-WAREHOUSE						C	X			X							
MOTOR VEHICLE MAINTENANCE SERVICE							C			X		X					
MOTOR VEHICLE REPAIR SERVICES							C					X					
NURSING, REST, CONVALESCENT HOME	C	C	C	C	C			X	X		X					C	
OFFICE, HOME	X	X	X	X	X								X	X		X	
OFFICE, PROFESSIONAL						X	X	X	X		X	X	C	X	S		
PARKING, COMMERCIAL						X	X				X			X	S		
PERSONAL SERVICES ESTABLISHMENT						X		X	X		X	X	C	X			
PLACE OF WORSHIP	X	X	X	X	X	X		X	X		X	X	X	X	X	X	
PRIVATE COMMUNITY USE	C	C	C	C	C	X		X	X		X	X		X		X	
RECREATION USE, LOW INTENSITY	X	X	X	X	X	X	X	X	X		X	X	X	X	S	X	X

DISTRICT / USE	R1	R2	MF1	MF2	MF3	MCU	LI	MF-MU1	MF-MU2	NLSO	TOD	HA	RO	VC	PE	PA	OS
RECREATION USE, HIGH INTENSITY						X		X	X		X	X			S		
RECREATION USE MEDIUM INTENSITY						X		X	X		X	X		X	S		
RECREATIONAL VEHICLE SITE										X					S		
RECYCLING CENTER							C			X					C	C	
REPAIR SERVICES ESTABLISHMENT							X	X	X	X	X	X					
RETAIL, SALES W/ DRIVE-THROUGH						C	X	X	X		X	X			S		
RETAIL SALES						X	X	X	X		X	X		X	S		
ROADSIDE SALE OF AGRICULTURAL PRODUCTS																X	C
SALES, TEMPORARY						X		X	X		X	X		X	S		
SALES, OUTDOORS						X				X				X	S		
SCHOOLS	X	X	X	X	X	X		X	X		X	X	X	X	X	X	X
SHOPPING CENTER						X					X			X			
SMALL SCALE WIRELESS FACILITY						X	X	X	X	X	X	X	X	X	X		
SOLID WASTE COLLECTION POINT							C								C	C	
STABLE, PUBLIC															S	X	
STORAGE, OUTDOOR							X			X					S		

DISTRICT / USE	R1	R2	MF1	MF2	MF3	MCU	LI	MF-MU1	MF-MU2	NLSO	TOD	HA	RO	VC	PE	PA	OS
TAXI-CAB LIMOUSINE SERVICE						C	C			X				C	S		
TRANSIT PARK AND RIDE											X				X		
VEHICLE SALES												C			S		
WAREHOUSE						C	X			X		C					
WIRELESS TELE-COMMUNICATIONS FACILITY						C	C	C	C		C	C			C		
AERODROME																	

CHAPTER 7: GENERAL DEVELOPMENT STANDARDS

SECTION 701: PURPOSE

The purpose of this Chapter is to provide development standards related to specific land uses and/or development standards for any use permitted by any provision of this Code. The regulations as established by this Chapter supplement and do not supersede other requirements of this Code.

SECTION 702: APPLICABILITY

The regulations and standards of this Chapter shall apply to all applications for development approval as required by this Code.

SECTION 703: PARKING AND LOADING

A. Purpose of Parking and Loading Provisions

To ensure the adequate provision of parking and loading facilities for all development within the City.

B. Loading Requirements

All uses shall provide off-street loading spaces except residential uses or other uses specifically waived by the Development Review Board in accordance with Subsection 7 below.

1. Location. All loading spaces shall be located on the same lot as the principal use. Loading spaces shall minimize circulation conflicts on the lot. Loading areas shall not be calculated to include required off-street parking spaces.
2. Size. All loading spaces shall be of sufficient size to allow necessary maneuvering for deliveries without encroaching upon the public right-of-way, parking spaces, or internal parking lot circulation unless a specific waiver is approved by the Development Review Board. Loading spaces shall be fifteen (15) feet wide by twenty-five (25) feet in length. The Development Review Board may require greater dimensions if deemed necessary to handle projected truck traffic volumes.
3. Surfaces. All loading areas shall be hard-surfaced and clearly marked with painting to designate the loading area. This requirement may be waived by Staff or the Development Review Board.
4. Combination of uses. Loading spaces may be designed to serve one or more businesses located in the same building or on the same lot. The Development Review Board may approve joint usage on adjacent lots provided a written agreement is submitted and filed with a deed.
5. Ratios. One (1) space for the first five thousand (5000) square feet of gross floor area. One (1) additional space for each additional thirty thousand (30000) square feet of gross floor area.
6. Other standards. Loading areas shall meet screening, landscaping, lighting, and other development standards as specified herein.
7. Waivers. All waiver requests shall be submitted in writing. Staff may approve a waiver request for a change in use which does not increase loading requirements or any

building expansion which does not exceed five hundred (500) square feet of gross floor area. The Development Review Board may approve waiver requests under the following circumstances.

(a) The proposed use will require minimal deliveries which will not interfere with the traffic circulation on the lot.

(b) Deliveries are made during non-business hours.

(c) Existing development makes it impossible to meet loading standards.

The Development Review Board may require that waivers be filed with City Land records and that a statement be attached that any change in use may require the construction of loading facilities.

C. Off-Street Parking Requirements.

1. All required parking spaces, with the exception of parallel parking spaces, shall have a minimum width of nine (9) feet and a minimum length of eighteen (18) feet. Parallel parking spaces shall have a minimum width of eight (8) feet and minimum length of twenty-two (22) feet.

2. Parking lot aisles shall meet the following minimum dimensional standards:

PARKING PATTERN	MINIMUM ONE-WAY AISLE WIDTH	MINIMUM TWO-WAY AISLE WIDTH
90° PERPENDICULAR	TWENTY'	TWENTY- FOUR
60° ANGLE	EIGHTEEN'	TWENTY- FOUR
45° ANGLE	SIXTEEN'	TWENTY- FOUR
30° ANGLE	FOURTEEN'	TWENTY- FOUR
PARALLEL	TWELVE'	TWENTY- FOUR

The following is a list of parking requirements. Based on the calculations below, fractions of a space shall be rounded up when the fraction of a space is one half (0.5) or above and rounded down when the fraction is below one half (0.5). The required number of off-street parking spaces shall be as follows:

LAND USE\BUILDING TYPE	**REQUIRED PARKING SPACES**
AUTO REPAIR\PAINTING	2.0 PER 1,000 SFGFA*
BANK	3.3 PER 1,000 SFGFA*
BANK WITH DRIVE-THROUGH TELLER	3.0 PER 1,000 SFGFA*
BOWLING ALLEY	4.5 PER LANE
PLACE OF WORSHIP	.5 PER SEAT OR 22 LINEAR INCHES OF BENCH

LAND USE\BUILDING TYPE	REQUIRED PARKING SPACES
CLEANERS	1.5 PER 1,000 SFGFA
CONSTRUCTION SERVICES ESTABLISHMENT	2.5 PER 1,000 SFGFA*
CONVENIENCE STORE	7.5 PER 1,000 SFGFA*
DEPARTMENT/DISCOUNT STORE	4.5 PER 1,000 SFGFA*
DRIVE-THROUGH FACILITY	3 SPACES PER DRIVE-THROUGH WINDOW
EATING AND DRINKING ESTABLISHMENT	1 PER 100 SQUARE FEET OF CUSTOMER SERVICE AREA
FAST FOOD RESTAURANT	MINIMUM – 6 SPACES PER 1,000 SQUARE FEET OF CUSTOMER AREA MAXIMUM – 10 SPACES PER 1,000 SQUARE FEET OF CUSTOMER AREA
FUNERAL HOME	MINIMUM – 1 PER 150 SFGFA* MAXIMUM – 1 PER 75 SFGFA*
FURNITURE STORE	2 PER 1,000 SFGFA*
HARDWARE STORE	3 PER 1,000 SFGFA*
HOSPITAL/CLINIC	1.5 PER BED
HOTEL/MOTEL EXTENDED STAY	1 PER ROOM
INDUSTRIAL PARK	1.6 PER 1,000 SFGFA**
LANDSCAPE SERVICE	1.5 PER 2 EMPLOYEES + 1 PER BUSINESS VEHICLE
LAUNDROMAT	5.0 PER 1,000 SFGFA
MANUFACTURING (LIGHT AND HEAVY)	1 PER 1,000 SFGFA *UP TO 20,000 SQUARE FEET 1 PER 2,000 SFGFA ABOVE 20,000 SQUARE FEET
MEDICAL CLINIC	3.5 PER 1,000 SFGFA*
MEDICAL AND DENTAL LAB	1.5 PER EMPLOYEE
MUSEUM/CULTURAL FACILITY	3.3 PER 1,000 SFGFA**
NURSING HOME	.33 PER ROOM
PERSONAL SERVICES ESTABLISHMENT	2.0 PER 1,000 SFGFA +1 PER CUSTOMER SERVICE STATION
PRINT/COPY SHOP	2.5 PER 1,000 SFGFA*
PROFESSIONAL OFFICE	3.5 PER 1,000 SFGFA*
RECREATION CENTER	4 PER 1,000 SFGFA*
RESIDENTIAL:	
ACCESSORY APARTMENT	1 PER UNIT
BED AND BREAKFAST	1 PER SLEEPING ROOM +2 PER DWELLING
BOARDING HOUSE	1 PER ROOM
DORMITORY	1 PER ROOM
ELDERLY HOUSING	.5 PER DWELLING UNIT
FRATERNITY/SORORITY	1.5 PER 1,000 SFGFA*

LAND USE\BUILDING TYPE	REQUIRED PARKING SPACES
GROUP HOME SINGLE FAMILY, DUPLEX, TRIPLEX AND MULTI-FAMILY	.3 PER SLEEPING ROOM 1 PER DWELLING UNIT
RETAIL SALES ESTABLISHMENT	2.5 PER 1,000 SFGFA*
SERVICE STATION	5.5 PER 1,000 SFGFA*
SHOPPING CENTER	PARKING REQUIREMENT SHALL BE BASED ON THE NET USES OF THE SHOPPING CENTER.
SPORTS CLUB/HEALTH SPA	5 per 1,000 SFGFA*
WAREHOUSE, MINI	.25 PER 1,000 SFGFA*
WAREHOUSE	.25 PER 1,000 SFGFA*
VETERINARY CLINIC	2.5 PER 1,000 SFGFA*
* SFGFA=Square feet of gross floor area. ** SFGRA=Square feet of retail floor area	

D. Drive-through Facilities.

1. Location. Drive-through facilities shall not utilize required parking spaces to meet stacking requirements. Facilities shall be designed to minimize conflicts with other on-site vehicular and pedestrian traffic.
2. Stacking requirements. A minimum of six (6) vehicles shall be accommodated in each stacking lane.

E. Parking or storage of junk vehicles

The parking or storage of any unregistered or junk vehicle is prohibited except as provided in a vehicle repair facility unless screened from view from the adjoining street and property line. No junk vehicle may be parked or stored within any required setback. No such vehicle parked, or stored on any lot shall decrease the required number of parking spaces. In no instance may junk vehicles be parked and stored in any Residential District except for one personally owned vehicle which is totally screened from view.

F. Parking of Commercial Vehicles in Residential Areas

The parking or storage of commercial vehicles shall not exceed one commercial automobile, pick-up or van at a residence.

G. Parking of Recreational Vehicles

Recreational vehicles shall meet the following requirements:

1. No more than one such vehicle may be parked in a driveway or front yard. Vehicle must be parked outside of the required setbacks.
2. No such vehicle, parked or stored, on any lot shall decrease the required number of parking spaces.
3. The parking of a recreation vehicle owned by visitors may be temporarily parked for a period of time not to exceed three (3) consecutive weeks.

4. Any recreational vehicle parked or stored on any residential lot for a period exceeding one (1) month shall be located in an enclosed garage, a carport, or a rear yard, except one (1) vehicle may be placed in a side yard to the rear of the front setback.

H. Parking of Recreational Vehicles on Public Property

The Development Review Board may allow for the temporary off-site parking of recreational vehicles on public property provided it is reviewed and approved as part of a major event taking place within the Planned Exposition District. The Development Review Board may place conditions upon any approval in the following areas:

1. Time limits may be established for the use;
2. Maximum number of vehicles allowed;
3. Traffic safety measures; and
4. Conditions to ensure conformance with performance standards set forth in Section 718 and other applicable standards of the Code.

I. Vehicles For Sale

Any vehicle advertised for sale within any District and not in an approved car lot shall obtain a Temporary Use Permit except as specified below and shall meet the following standards:

1. Within any residentially zoned District, one (1) personal vehicle, which is properly registered to an occupant of the property, may be offered for sale at one time without a Temporary Use Permit.
2. Vehicles for sale may be parked only in designated drive-ways or parking areas and shall not be parked within any required setbacks.
3. No vehicle for sale may be parked in any public right-of-way in any district for more than twenty-four hours.
4. Vehicles for sale and parked in any parking lot for more than four (4) hours shall obtain written permission from the property owner. No more than two (2) Temporary Use Permits shall be granted for any parking lot at any time.
5. Nothing in this Section shall allow the sale of one or more vehicles within any District, or within the public right-of-way, for commercial purposes without full compliance with all provisions of this Code.

J. Parking of Storage Trailers, Storage Boxes and Similar Structures

The parking of storage trailers, storage boxes, railroad cars, or similar structures for storage of personal or business property or use as a food service establishment is expressly prohibited in all districts unless a Temporary Use Permit has been granted.

1. Temporary structures for construction purposes shall be allowed only during the time of construction. Temporary structures for storage of personal or business property shall be allowed for a period not to exceed three (3) months with a Temporary Use Permit. Temporary storage structures shall be located in a side or rear yard outside of the front setback.
2. Within zoning districts where “Eating and Drinking Establishment” is a permitted use, or on any municipal or school property, the operation of food trucks compliant with the specifications of Section 727 is permitted.

K. Other Parking Standards and Applicability

1. Location. All parking lots shall require Site Plan Review. All parking lots shall be located on the lot for which the parking requirement was generated unless specific alternatives are approved by the Development Review Board. The Development Review Board may waive the required number of off-street spaces for a proposed development only if sufficient alternative parking is available or if a waiver is granted in accordance with Section 703.K.15.

2. Parking Lot Fund. The Development Review Board may accept payment in lieu of construction of on-site parking spaces. The cash payment shall be placed in a public parking lot improvements fund. The value of any payments in lieu of construction shall be calculated by multiplying the required number of parking spaces times an average parking space cost. The applicant shall provide an average construction cost which shall be reviewed by the City. The Development Review Board may authorize payments in lieu of parking only within the Village Center District or within any commercial district where the Capital Budget includes the construction of public parking facilities which would serve the proposed business as well as the surrounding commercial area.

3. Surfacing. All parking areas shall be hard-surfaced. Residential driveways serving up to five (5) homes may be gravel, but the driveway apron and any portion in the public right-of-way must be paved twenty (20) feet beyond the edge of the public right-of-way. The Development Review Board may waive this requirement for parking lots in accordance with Section 713.

4. Drainage. All parking lots shall be designed to minimize stormwater run-off on adjacent properties and in no case shall the stormwater flow be allowed to increase. To the extent possible, run-off shall be contained on the lot. All drainage facilities shall be constructed in accord with Public Works Specifications contained in Appendix A of this Code and Section 713 of this code. Unless specifically approved otherwise, all facilities shall be not be connected to the City stormwater system.

5. Accessible provisions. All parking lots shall provide hard-surfaced accessible spaces which are clearly designated, marked, and signed for accessible use only. All accessible spaces shall conform to the American with Disabilities Act. The following number of spaces shall be provided:

Total Parking in Lot	Required Minimum Number of Accessible Spaces
1 to 25	1
26 to 50	2
51 to 75	3
76 to 100	4
101 to 150	5
151 to 200	6
201 to 300	7
301 to 400	8
401 to 500	9

501 to 1000	2 percent of total
1001 and over	20 plus 1 for each 100 over 1000

6. Off-site parking - commuter lots. Commuter lots may be approved by the Development Review Board with Site Plan Review and Approval.
7. Setbacks. All parking spaces shall meet the setback standards for the District in which it is located.
8. Screening. The screening requirements of Section 708 shall apply to the perimeters of all parking lots. In addition, the Development Review Board may require screening for any parking lots located within any front yard. Screening shall emphasize the separation of parking lots from adjoining public streets to minimize glare from vehicle headlights onto public streets. The use of berms and landscape materials is the preferred method of screening. The Development Review Board may approve fencing, if it determines the preferred methods are impractical.
9. Landscaping. All parking lots shall be landscaped as specified in Section 719 of this Code.
10. Pedestrian access. The design of all parking lots shall incorporate measures to minimize safety hazards to pedestrians. Pedestrian paths shall be designated and clearly marked. Separation of vehicle and pedestrian traffic shall be included in all parking lot plans where possible. The Development Review Board may waive this requirement due to unique characteristics of the lot such as small lots, underground parking or innovative alternative designs.
11. Striping. Hard surfaced parking spaces shall be clearly striped and maintained and shall meet standard parking dimensional requirements as specified in Section 703.
12. Traffic Control Signs. The Development Review Board may require the use of uniform ingress and egress signs, traffic control signs, and other signs as necessary to direct the flow of traffic.
13. Lighting. Lighting shall be provided in all parking lots and related walkways as specified in Section 704 of this Code.
14. Joint Parking Facilities. Minimum parking is required in accordance with Section 703.C, unless the applicant requests and the Development Review Board approves a reduced number based on shared parking calculations. The applicant shall use Shared Parking by Mary Smith (https://knowledge.uli.org/en/books/2019/shared-parking) as most recently updated for shared parking calculations. Joint parking arrangements may be approved by the Development Review Board, provided that the applicant has submitted legal documentation to guarantee continued long-term availability of said parking. Within any shopping center or other areas where joint parking has been established, the Development Review Board may not approve any site plan and site plan amendments or other use changes which would increase parking needs, or any waivers of parking requirements, until the applicant has submitted proof of notice to all tenants or shared parking participants of the proposed change.
15. Tandem Parking
    (a) Tandem parking is only allowed for residential uses or for dedicated employee-only parking where signed as such.

(b) Two parking spaces in tandem must have a combined minimum dimension of 9' in width by 34' in length.

(c) Up to 50 percent of the total required off-street parking spaces provided may incorporate tandem parking.

(d) Tandem spaces must be assigned to the same dwelling unit or business establishment. Tandem parking shall not be used to provide guest/shared parking.

16. Waivers. The Development Review Board may waive some or all parking requirements and may place conditions on a waiver as necessary to guarantee adequate parking. The Development Review Board may require any change in use on any property where a waiver has been granted to be reviewed for parking impacts, and the change shall be prohibited if it is deemed to generate a parking deficiency. The Development Review Board shall determine that one or more of the following standards are met at a specific location prior to granting a waiver:

(a) The proposed uses have staggered business hours with minimal overlap in business hours which allow for shared use of parking spaces.

(b) The applicant presents evidence that the parking requirements are excessive based upon new parking studies, traffic engineering data, or obvious and apparent existing parking demands.

(c) The applicant demonstrates that the demand for parking is reduced because the type of business proposed generates substantial pedestrian traffic.

(d) The applicant demonstrates that sufficient off-street parking is available at other locations within two hundred (200) feet, which are or have been approved by the Development Review Board.

(e) The use of mass transit or other alternate transportation reduces parking demand.

(f) Joint parking facilities with abutting businesses are sufficient to meet parking demand.

(g) The latest edition of the ITE Parking Manual, or other professional source, provides data which demonstrates that the parking demand for a proposed use is less than the standards specified in this Code.

L. Bicycle Parking and Storage Standards and Applicability

These standards for short term parking and long-term storage of bicycles are intended to recognize and promote cycling as a viable means of transportation and recreation for residents, consumers, visitors, and employees; and to ensure compliance with the Comprehensive Plan which calls for improved access to and safety of bicycle and pedestrian facilities.

1. Short Term Bicycle Parking. These bicycle parking spaces (bps) standards apply to any application for development that requires site plan approval under Section 502.F of the Land Development Code in all Zoning Districts except for Residential 1 and Planned Agriculture.

(a) The minimum number of bicycle parking spaces shall be as indicated on Table 703.L.1.

(b) Bicycle parking shall utilize the 'Inverted U' style or Post-and-ring style. The rack may not be constructed of wood. See Figure 1 and Figure 2 below for permitted and non-permitted rack types.

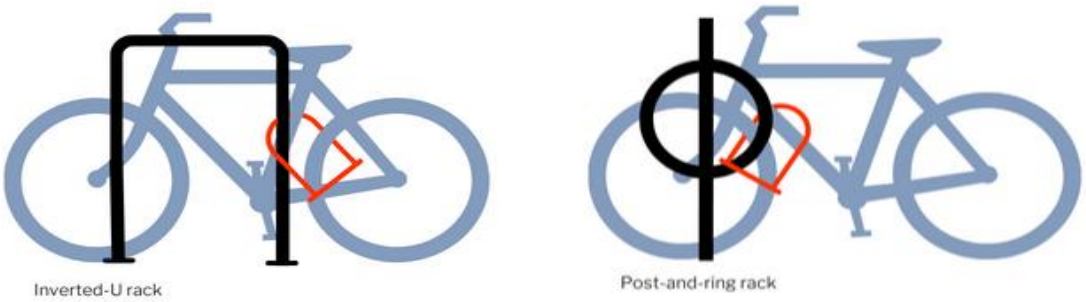

Figure 1: Permitted rack types (not to scale)

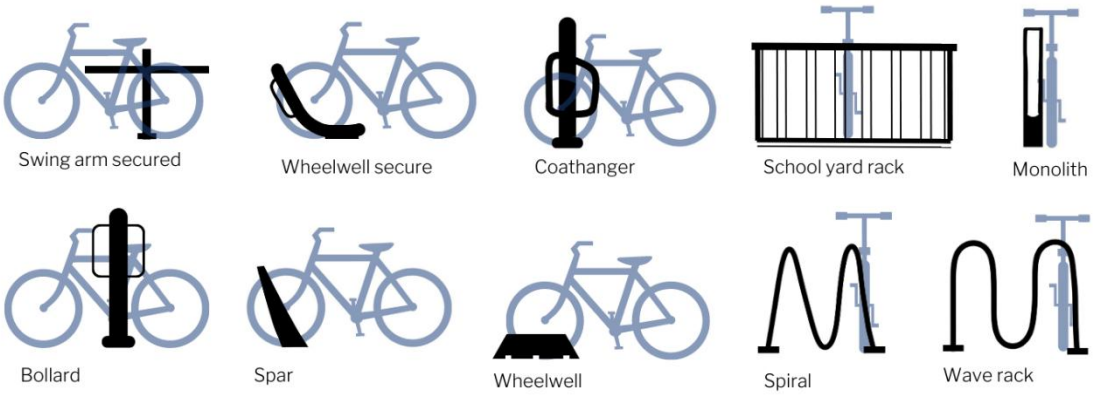

Figure 2: Non-permitted rack types (not to scale)

(c) If an applicant wishes to install something different, any bps shall meet the following specifications:
   (i) Allow secure locking of the frame and wheel;
   (ii) Support a bicycle frame at two points of contact;
   (iii) Meet the intent of the examples provided in the Association of Pedestrian and Bicycle Professionals Essential of Bike Parking, 2015 or as most recently updated.

(d) Location & Serviceability. Each bps:
   (i) Shall be securely anchored to the ground and on a hard, stabilized surface of at least six feet in length and a width sufficient to satisfy the remainder of these regulations;
   (ii) Shall be spaced to allow easy access to each bicycle
   (iii) Shall be spaced sufficiently away from obstructions, including walls, doors, posts, columns, landscaping, and other racks, in accordance with the Association of Pedestrian and Bicycle Professionals Essential of Bike Parking, 2015 or as most recently updated. The minimum spacing is

summarized in Figure 3 below

(iv) Shall be easily accessible from the street or multi-use path and protected from motor vehicles;

(v) Shall be visible to passers-by and well-lit to promote usage and enhance security; especially in retrofitted areas, or where good visibility is not achievable, an applicant may be required to install directional signage.

(vi) Shall be located at or nearby principal entrances where reasonably practicable, unless doing so compromises the other directives of this subsection, including visibility and accessibility.

(vii) Is preferred to be covered from rain when possible

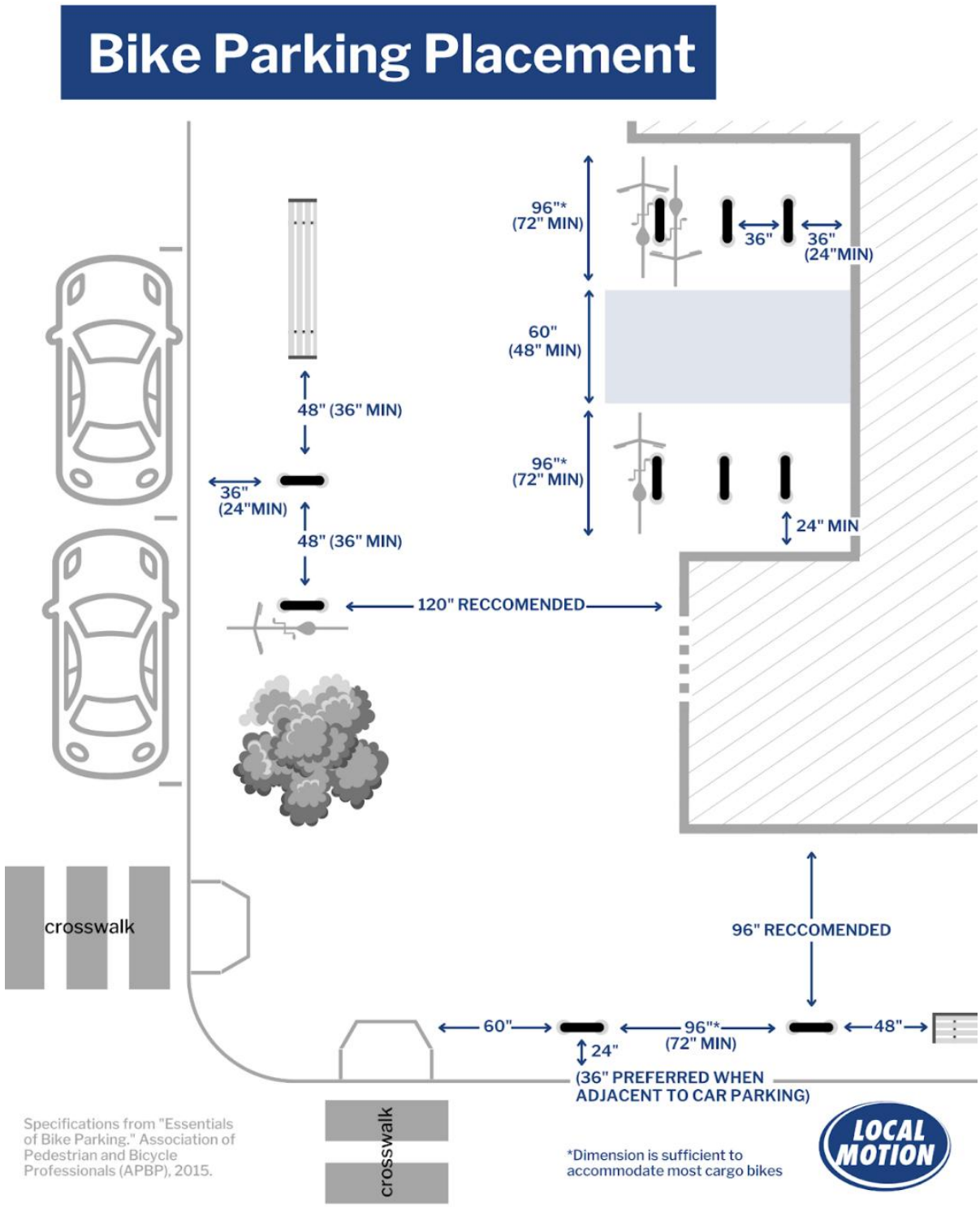

Figure 3: Bike Rack Placement

(e) Bicycle parking serving buildings with multiple entrances shall be dispersed so that all principal entrances are served.

(f) For office building use, up to 50% of short term bicycle parking requirements may be met by supplementing the (indoor) long term bicycle parking requirements with the required short term bicycle parking spaces.

2. Long Term Bicycle Storage Applicability. These standards apply to construction of new mixed use or commercial buildings and any new residential building with more than 3 dwelling units; building additions or reconstruction of a minimum of 5,000 gross square feet in area for mixed use or commercial buildings and any residential building with five or more residential units and a minimum of 5,000 gross square feet in area.
   (a) Standards for Residential Buildings
      (i) Secure Storage in bicycle locker, bicycle storage room or private enclosure outside of the private residence that protects the entire bicycle, including components and accessories against theft and weather.
      (ii) Garages which are private to each unit may count towards parking requirements.
   (b) Standards for Non-Residential Buildings
      (i) Secure storage in bicycle locker, bicycle storage room or enclosure that protects the entire bicycle, including components and accessories against theft and weather, allows secure locking of the frame and wheel and supports a bicycle upright.
      (ii) Where indicated in Table 703.L.2, clothes lockers shall be lockable with the following minimum dimensions: 12” wide, 18” deep, 36” high. Lockers do not need to be in same place as bicycle storage;
      (iii) Secure office space (private offices) may account for up to 50% of the required indoor parking areas and lockers provided they are located on the ground floor of the building, accessible and of sufficient size;
      (iv) Shower and changing facilities dependent on the number of bicycles required to be stored and as indicated on Table 703.L.1.

Table 703.L.1. Bicycle Parking Requirements

Type of Activity	Short Term Bike Parking	Long Term Bike Storage
Residential buildings with more than 3 units	1 for every 10 units; minimum 4[1]	1 for every unit
Warehousing, contractor, and light industry	1 per 20k SF; minimum 2	2 per tenant
Retail, restaurant, office, and all other	1 per 5k SF; minimum 4	50% of required short term bike parking spaces.
Educational	1 space for each 20 students of planned capacity.	For new buildings only, one space for each 20 employees.

[1] May request waiver from minimum per building for buildings with less than 6 units if Development Review Board finds the need is adequately met for visitors.

Table 703.L.2. Long Term parking – shower and changing room facility requirements

Number of protected long term bicycle parking spaces	Changing facility	Unisex Showers	Clothes Lockers
1-3	none	none	1
4 - 9	1[2]	1[2]	3
For every 10	1[2]	1[2]	40% of LTB parking

[2] if unisex, units available to any gender; otherwise provide one per gender

SECTION 704: LIGHTING

A. Purpose

To provide appropriate outdoor lighting adjacent to buildings, streets, sidewalks, and within parking areas for public safety and to minimize glare on streets and adjoining properties while minimizing energy use through the use of efficient fixtures and minimizing the use of lighting during non-business hours or when activity is not occurring on-site.

B. General Standards

Lighting is allowed in required yards and shall be subject to the following regulations:

1. Lights shall be used for the purpose of illumination, including security lighting, and not for advertising purposes.
2. The operation of searchlights is prohibited except for public safety purposes.
3. All light fixtures shall be hooded or shielded and directed downward at sixty (60) degrees to horizontal, unless otherwise approved, and shall have concealed light sources.
4. Light sources shall not be visible at property lines.
5. Intermittent lighting, except for holiday lighting, may not be used.
   (a) Displays, including lighting, erected in connection with the observance of holidays shall not be illuminated after ten (10) days following the holidays. Temporary lighting for holiday decorations from November 15 to January 15 are exempt.
6. Lighting devices may not produce direct or reflected glare on adjoining properties or streets.
7. All residential and commercial exterior light sources shall be Dark Sky Compliant.
8. Lighting for emergency purposes or lighting required on any structure for public safety purposes shall be exempt from the provisions of this section as approved by the Development Review Board.
9. Lighting shall only be used as necessary for the operation of a business or activity. Lights shall be placed on a timer; an operations plan must be approved as part of a development application for the project site. Lighting plans may include the use of some, but not all, of on-site lighting during non-hours of operation.
10. String lights may be used except as specifically prohibited within this Section. Illuminated tubing or strings of lights are not to be illuminated between 10:00pm and 6:00am to minimize light disturbance. If used in connection with commercial premises, string lights shall be switched off outside of business hours. String lights shall not be used as the sole source of light for pedestrian areas.

C. Review of Lighting Plans

The installation of or replacement of any outdoor lighting fixtures of new design shall require a zoning permit with the exception of residential lots with fewer than five (5) housing units. If the proposed lighting is associated with a project that requires Site Plan Review, the Development Review Board shall review and approve the lighting plan. If site plan is not required, staff shall review the lighting plan to ensure conformance with Section

704.

Applicants shall submit an exterior lighting plan for the City's review. The plan shall include the following information:

1. A Site Plan drawn to a maximum scale of one (1) inch to twenty (20) feet, to include building footprint, landscaping, parking areas; and all proposed lighting fixtures, unless another scale is approved by staff;
2. Specifications for all proposed lighting fixtures including a manufacturer's catalog cut and photometric data showing numerical grid of lighting levels, in foot candles, that fixtures will produce on the ground.
3. Proposed mounting height and wattage of all exterior lighting fixtures;
4. For all parking areas, drives, and walkways an analysis and illuminance level diagram showing a numerical grid of lighting levels, in foot candles, and a table of lighting statistics verifying that the proposed installation conforms to the lighting standards in this section; and building elevations with fixtures, portions of wall to be illuminated.

D. Parking Lot and Pathway Illumination

1. For parking lots of ten (10) spaces or more, pole lighting is required to be used to provide even illumination for parking spaces and interior walkways.
2. Light fixtures shall be located no more than five (5) feet outside the perimeter of the parking area.
3. All light fixtures shall be hooded or shielded and downward directed at sixty (60) degrees to horizontal, unless otherwise approved, and shall have concealed light sources.
4. Wood utility or similar poles may not be used to mount light fixtures unless specifically approved by the Development Review Board. Decorative poles of wood or other materials may be approved by the Development Review Board upon determination that they are visually compatible with the design of the development.
5. Energy saving LED lamps with a correlated color temperature not exceeding four thousand three hundred (4,300) Kelvin (K) shall be used. Special alternatives may be approved by the Development Review Board upon determination that the purposes of this Section are achieved.
6. Light fixtures for parking lot and pathway lighting may be mounted on existing utility poles in the public right-of-way. This configuration is allowed only in commercial districts. The luminaries must have extended shields and be mounted ninety (90) degrees to the roadway. Fixtures shall be mounted at the same height as existing street lighting in the area.
7. All parking lot and pathway lighting fixtures shall be cut-off fixtures as defined by the illuminating Engineers Society of North America (IESNA)
8. Alternatives: The design for an area may suggest the use of parking lot and pathway lighting fixtures of a particular "period" or architectural style, as either alternatives or supplements to the lighting described above.
9. Lighting shall conform to the Chittenden County Regional Planning Commission "Outdoor Lighting Manual for Vermont Municipalities" or as otherwise approved

by the City Engineer. The minimum lighting level shall be at least two tenths (0.2) foot candles but not exceed four tenths (0.4) foot candles and the maximum uniformity ratio (average to minimum) shall be 10:1, unless otherwise approved by the City Engineer.

10. Light fixtures shall be mounted in accordance with the table below or as otherwise approved by the City Engineer.

	LI District	HC District	VC District	MF District	All Other Districts
Max Mounting Height	30ft.	20ft.	15ft.	15ft.	16ft.

*Notes: For parking areas of fifty (50) or more spaces, light fixtures may be allowed to be mounted up to thirty (30) feet above grade if all fixtures are a minimum of one hundred (100) feet from a residential district.

E. Illumination of Building Facades and Landscaping:

With the exception of structures in the Light Industrial District and structures having symbolic or historic significance, facade lighting for safety and pedestrian access may be approved by the
Development Review Board as long as it is not visible from off-site. Building facades having symbolic or historic significance shall be approved by the Development Review Board and the following provisions shall be met:

1. The maximum illumination on any vertical surface or angular roof surface shall not exceed two (2) foot candles.
2. When allowed lighting fixtures shall be located and shielded so the light is directed only onto the building facade. Lighting fixtures shall not be directed towards adjacent streets or properties.
3. Lighting directed toward a sign shall be shielded so that it illuminates only the face of the sign. It shall not shine directly into a public right-of-way or residential property.

F. Roadway Lighting:

1. New or replacement light fixtures on arterial and non-residential collector streets, shall be of cut-off cobra type fixtures with LED bulbs with a correlated color temperature not exceeding four thousand three hundred (4300) Kelvin, mounted no more than forty (40) feet above grade. Specific alternatives may be approved by the Development Review Board upon determination that the purposes of this Section will be achieved.
2. On other existing City streets, new or replacement light fixtures shall match existing styles unless alternatives are approved by the Development Review Board. Fixtures shall have concealed LED bulbs with a correlated color temperature not exceeding four thousand three hundred (4300) Kelvin and the height shall match that of existing street lights in the area.
3. On new residential streets, street lights shall use "shoe box" style fixtures on black or bronze anodized poles up to twenty five (25) feet in height with LED bulbs with

a correlated color temperature not exceeding four thousand three hundred (4300) Kelvin, unless alternatives are approved by the Development Review Board.

4. The selection and location of roadway and street lights shall achieve the recommended illuminance per the American National Standards Institute (ANSI)/Illuminating Engineering Society of North America (IESNA) RP-8, American National Standard Practice for Roadway Lighting. The standards summarized in the table below shall be utilized unless otherwise approved by the City Engineer.

Street Type	Average Illuminance (fc)	Average to Minimum	Maximum Mounting Height, ft
Major	0.9	3	30
Collector	0.6	4	30
Residential	0.4	6	25
Pedestrian Areas	0.4	4	to match street

New and replacement fixtures shall be fully cutoff, fully shielded fixtures to minimize glare and light trespass.

New and replacement fixtures shall be light emitting diodes (LEDs) with a maximum correlated color temperature of 4300K.

G. Recreation Facility Lighting:

1. Maximum post and fixture mounting height shall not exceed eighty (80) feet in height.
2. Light fixtures shall not exceed a total cutoff angle of ninety (90) degrees, provided the luminary is shielded to prevent light and glare spill-over to residential property.
3. Recreational lighting may only be used between the hours of 8:00 a.m. and 12:00 midnight.
4. Recreational lighting shall not be permitted within residential districts except for public or private schools, public parks or public open spaces.

H. Review of Lighting Plans

If the project requires Site Plan review, the lighting shall be included in such application for review by the Development Review Board. If Site Plan review is not required, staff shall review the lighting plans.

I. Lighting of Gasoline Station/Convenience Store Aprons and Canopies Where Allowed:

Lighting levels on gasoline station/convenience store aprons and under canopies shall be adequate to facilitate on-site activities. Lighting of such areas shall not be used to attract attention to the business.

1. Areas on the apron away from the gasoline pump island used for parking or vehicle storage shall be illuminated in accordance with the requirements for parking areas.
2. The pump islands and under the canopies shall be illuminated so that the

minimum horizontal illuminance at grade level is at least one (1) foot candle and no more than five and a half (5.5) foot candles. The uniformity ratio (ratio of average to minimum illuminance) shall be no greater than four to one (4:1), which yields an average illumination level of no more than twenty-two (22) foot candles.

3. Light fixtures mounted on canopies shall be recessed so that the lens cover is recessed or flush with the bottom surface of the canopy and shielded by the fixture or the edge of the canopy so that light is restrained to no more than eighty-five (85) degrees from vertical.

4. As an alternative (or supplement) to recessed lights, indirect lighting may be used where light is beamed upward reflecting off the underside of the canopy. Fixtures must be shielded so that direct illumination is focused exclusively on the underside of the canopy.

5. Lights shall not be mounted on the top or sides of the canopy and the sides of the canopy shall not be illuminated.

J. Lighting of Exterior Display/Sales Areas:

Lighting levels on exterior display and sales areas shall not be used to attract attention to the businesses. The applicant shall designate areas to be considered display and sales areas and areas used as parking or passive vehicle storage areas. The designation must be approved by the Development Review Board.

1. Areas designated as parking or passive display and sales areas shall be illuminated
in accordance with the requirements for parking areas in this Section,

2. Areas designated as exterior display and sales shall be illuminated so that the average horizontal illuminance at grade level is no more than five (5) foot candles. The uniformity ratio (ratio of average to minimum illuminance) shall be no greater than four to one (4:1). The average and minimum shall be computed for only that area designated as exterior display sales areas.

3. Light fixtures shall meet the IESNA definition of cut-off fixtures, and shall be located, mounted, aimed and shielded so that direct light is not cast onto adjacent streets.
or properties.

4. Fixtures shall be mounted no more than twenty-five (25) feet above grade, and mounting poles shall be located either inside the illuminated area or no more than ten (10) feet away from the outside edge of the illuminated area.

SECTION 705: CURB CUT AND ACCESS TO PUBLIC STREETS

A. Purpose

To promote the smooth and efficient flow of vehicular, pedestrian, and bicycle traffic and to minimize safety hazards.

B. Residential Uses

All curb cuts for residential uses up to a four-family dwelling shall be reviewed and

approved by Staff through issuance of a zoning permit.

1. Each residential use up to a four-family dwelling on a lot shall be allowed one curb cut
   (a) for residential lots with two or fewer dwelling units, the curb cut shall not exceed twenty (20) feet in width at the street and the driveway shall not be greater than twenty (20) in width until beyond 3 feet of the front property line.
   (b) for residential lots with three or four dwelling units on the side of a street with an adjacent sidewalk, the curb cut shall not exceed twenty (20) feet in width at the street and the driveway shall not be greater than twenty (20) in width until beyond 3 feet of the front property line unless the below conditions are met, in which case, the curb cut shall not exceed twenty-seven (27) feet or thirty (30) percent of the linear frontage of the lot, whichever is less:
      (i) The residential development involves the retrofit or addition upon an existing single-family dwelling or duplex that has been in place for at least five years.
      (ii) The driveway is on a side of the street without a sidewalk.
2. A lot which exceeds two hundred (200) feet of road frontage may be allowed a second curb cut, provided the curb cuts are at least fifty (50) feet apart.
3. For the purpose of determining curb cuts, all residential lots with five (5) or more dwelling units shall be reviewed as commercial curb cuts.

C. Commercial and Industrial

All commercial and industrial development shall be designed to meet the following minimum standards.

1. One traffic lane – Twelve (12) to fifteen (15) foot curb-cut
2. Two traffic lanes – Twenty four (24) to thirty (30) foot curb-cut
3. Three traffic lanes – Thirty (30) to forty five (45) foot curb-cut

The Development Review Board shall review proposed curb cuts and the closure or relocation of existing curb-cuts based upon anticipated traffic, turning movements and need to accommodate buses and trucks. The applicant must provide information supporting a request for more than one twelve (12) foot wide entry and one twelve (12) foot wide exit.

D. General Standards

1. No more than one curb cut is allowed for each seventy-five (75) linear feet of frontage. Lots containing one (1) or two (2) family dwellings shall have only one (1) curb cut unless a second is specifically approved by the Development Review Board upon determination that special conditions justify the exception
2. Property under common ownership with separate leased structures shall be allowed the number of curb cuts which would be allowed for a single use.
3. Lots with frontage on both a principal and a secondary roadway shall obtain access from the secondary roadway unless specifically waived by the Development Review Board. Under special circumstances the Development Review Board may allow corner lots to have curb cuts on both adjoining streets.

4. Curb cuts shall not be less than twenty-five (25) feet from the property line in any Commercial or Industrial District unless joint access is proposed with the adjoining property, or an alternate is approved by the Development Review Board. Curb cuts for any residential property shall meet the setbacks of the District, unless joint access is specifically approved by the Development Review Board.

5. Curb cuts shall be designed to intersect a street at an angle of ninety (90) degrees.

6. Curb cuts shall intersect the pavement at a radius of not less than fifteen (15) feet nor more than forty (40) feet and shall become tangent to the edge of the pavement with the exception of curb cuts for single family dwellings.

7. The Development Review Board may grant exceptions to the curb cut standards due to unique circumstances or superior design. A traffic study may be required to determine the size and number of curb cuts.

8. For the purposes of this Section, a driveway is deemed a curb cut, if curb and gutter is not currently in place or proposed for construction.

E. Alterations Within Public Right-of-way.

The City Council shall have authority to approve a change within the public right-of-way which is not specifically delegated to the Staff by Section 705.B and to the Development Review Board in Section 705.C.

1. Routine maintenance by the Public Works Department and construction projects approved by the City Council shall be exempt from further approvals.

2. Closure or relocation of an existing curb cut (with the exception of the closure or relocation of an existing curb-cut as stipulated by the Development Review Board through Site Plan Review) shall require a Public Meeting by the City Council. Closure or relocation review may be by written request or may be initiated by the City Council. The City Council shall notify by mail all property owners abutting the proposed site and all property owners with a legal interest in the curb cut. Notice shall also be published not less than seven (7) days prior to the meeting in a newspaper of general circulation. The City Council shall consider the following standards:

(a) The use of the curb cut has changed due to an increase or decrease in traffic, and increase or decrease in truck traffic, or a change in use.

(b) Traffic and pedestrian safety hazards have increased due to increased traffic on the adjoining street, or increased usage of the curb cut.

(c) Alteration of the curb cut is necessary due to public improvements of public infrastructure.

(d) Alternate access is immediately available to provide reasonable access to the parcel.

(e) The curb cut was installed or used without approvals as specified in this Code.

(f) The curb cut adversely affects the flow of stormwater within the public right-of-way.

3. Any change, alteration, obstruction, filling, construction or placement of any material within the right-of-way shall require separate review and approval as specified

in this Code. No such activity shall occur without prior approval as specified herein.

4. Any change, alteration, obstruction, filling, construction, or placement of any material adjacent to a public right-of-way which drains, diverts, or alters the flow of water within the right-of-way shall be prohibited, unless specifically approved or permitted as authorized herein.

5. Appeal of any decision or permit granted under the provisions of this Section shall be to the City Council.

SECTION 706: ACCESSORY USES AND STRUCTURES

A. Purpose

To establish criteria for Accessory Uses and Accessory Structures and to establish certain limitations and standards for these uses and structures. Except as specifically provided elsewhere in this Code, no accessory use or structure may be approved, constructed or used before the principal structure is approved, constructed or used.

B. General Requirements

1. All accessory uses or structures shall be designed primarily to serve the principal use or structure.

2. No accessory structure shall be constructed, placed, or moved within any required setback except as provided herein.

3. No accessory structure may be located within any right-of-way, Visibility Triangle, utility easement or drainage easement.

4. No accessory structure shall be occupied unless the principal structure is occupied or used for a use as permitted within the District.

5. All accessory uses or structures shall comply with the use, density, and lot coverage requirements of the District within which it is located.

6. All accessory uses or structures shall obtain permits as specified in this Code unless specifically exempted.

7. All detached and semi-attached accessory structures shall not exceed fifty (50) percent of the above grade floor area of the principal structure. Driveways, walks, decks, patios and similar structures are excluded from this provision.

C. Set-back Exceptions

1. Driveways and Parking. Driveways and parking spaces may be located within any District pursuant to the regulations established herein. Personal vehicles may be parked in the paved area of any residential driveway so long as they are not parked closer than six (6) feet to any sidewalk or bicycle/pedestrian path. Driveways shall meet the rear setback requirement~~s~~ and must be at least two (2) feet from the side property line. No driveway shall be closer than two (2) feet from any side and rear property line. If parking spaces are located within the side yard setback areas of the underlying zoning district, they must be screened from view from the adjacent lot with a 6-foot opaque fence, or with hedges not less than six (6) feet in height. Any hedge planted for this purpose shall be of sufficient size and density to block vision at eye level within two (2)

years of planting. This screening requirement does not apply within the front setback or within any required Visibility Triangle.

2. Utilities. Public utilities and infrastructure may be located within any setback, provided that above ground structures are not located within any required Visibility Triangle. Above-ground utility structures shall be screened with vegetation when said screening does not interfere with the functional characteristics of the structure. To the extent possible above ground structures shall be designed and painted to match the characteristics of adjacent development. New and redevelopment projects shall install utilities underground.

3. Roof Overhangs. Roof overhangs or eaves on any structure may encroach into any setback for a distance not to exceed eighteen (18) inches.

4. Heating, ventilation and air conditioning equipment. Equipment for heating, ventilation or air conditioning which encroaches into a setback by not more than twelve (12) inches shall not be deemed to violate this Code. Equipment placed upon the roof of any commercial or residential structure shall not be deemed a violation of this Code if:

(a) It extends less than two (2) feet above the roof;

(b) It occupies no more than eight (8) square feet of area; and

(c) It generates no additional sound discernable at the adjoining property line.

5. Porches and decks. Porches and decks shall be deemed structures and shall meet the setback requirements.

6. Flagpoles, mailboxes, water fountains, bicycle racks, swing sets, bird houses, telephone booths, benches, and bus shelters may be allowed within a required setback if they meet the standards below:

(a) None of these uses may encroach upon the Visibility Triangle as established in Section 710 of this Code.

(b) Bus shelters shall be reviewed by the Development Review Board and meet Site Plan standards.

(c) Mail boxes are limited to the residents or occupants of the principal structure.

(d) Flagpoles in all districts must meet the requirements of Section 714.C.4

(e) Water fountains, lawn ornamentations, and benches shall not substantially alter the character of any residential neighborhood. Water fountains located on any commercial or industrial property shall not encroach on setbacks and shall require Site Plan approval.

7. Accessible ramps constructed to accommodate disabilities are exempt from setback provisions provided that no reasonable alternative is available and the encroachment is the minimum necessary to provide access. Covered or enclosed ramps shall meet all setback requirements.

8. A non-complying structure may be enlarged or expanded provided that the following conditions are met:

(a) The enlargement or expansion, itself, conforms to all provisions of this Code except setbacks.

(b) The structure, as enlarged, does not diminish any required yard or setback areas except a setback line encroachment equal to the existing building line.

(c) The expansion does not exceed any maximum density, lot coverage, intensity or height limitations.

9. Electric Vehicle Supply Equipment are exempt from setback requirements

10. The exceptions to setback requirements listed in this subsection are not exhaustive. Additional setback exceptions specified elsewhere in this Code are applicable.

D. Satellite Dish Antenna

No satellite dish or other antenna may be erected or placed within any District except in compliance with this Section and with Conditional Use approval.

1. All antenna located within any commercial, industrial, or multi-family District shall be located in a rear yard or be screened from view from adjacent streets and properties. If the applicant clearly demonstrates that said conditions interfere with the receipt of signals, the Board may reduce the conditions as necessary to obtain a signal. The Board may permit the installation of satellite dishes on a roof, if provisions are made to minimize visual impact.

2. Within any residential District, the structure shall be located within the rear yard. If the applicant clearly demonstrates that a signal cannot be received at this location, the dish may be located in the side yard. In no instance shall required setbacks be encroached upon.

3. Within any residential District, landscaping and berming shall be placed at the base of the structure to screen the dish to the extent possible from the neighboring property.

4. All antenna dishes shall be permanently ground-mounted unless specifically approved otherwise by the Development Review Board.

5. If the Board determines that the above standards cannot be met, the Board may alter the requirements of this Section but only to the extent necessary to obtain satellite signals. The Board may place reasonable conditions on its approval to minimize visual or other impacts at adjoining property lines.

6. Satellite dishes less than one (1) meter in diameter are exempt from the provisions of this section and do not require a zoning permit. However, satellite dishes shall be screened from view from the street unless necessary to receive a signal.

E. Residential Garages

No garage shall be located within any residential District except as follows:

1. Residential garages on residential lots with fewer than five (5) housing units in combination with all other detached or semi-attached accessory structures (excluding driveways, decks walks, patios and similar structures) shall not exceed fifty (50) percent of the total above grade floor area of the principal structures unless Conditional Use approval is granted.

2. Any detached garage which contains a second story or exceeds the fifty (50) percent requirement shall require Conditional Use approval by the Board.

3. No space in any garage may be rented or used for commercial or business, except that one or more parking stalls may be rented or used for the parking of motor

vehicles, provided that all other provisions of this Code are met.

F. Storage sheds. Other Structures

Within any residentially zoned District, storage sheds must be located a minimum of five (5) feet from the property line within any side or rear yard. The Administrative Officer may waive this setback for sheds no larger than one hundred and twenty (120) square feet and with a height no taller than twelve (12) feet, and if the structure does not shed rainwater onto neighboring properties. The total square footage of all storage sheds and detached garages shall not exceed fifty (50) percent of the floor area of the principal structures. Storage sheds within any Commercial or Industrial District shall meet Site Plan standards.

Within any residential district, the construction of a tree house, playhouse or an animal shelter (doghouse) shall be exempt from permitting requirements if it meets setbacks and does not exceed fifty (50) sq. ft. in floor area.

G. Outdoor Business Activities:

1. No sale or display of any product shall be allowed within any public right-of-way or upon any public sidewalk without first obtaining a Temporary Use Permit, except a business in the Village Center District that abuts the sidewalk may display merchandise or make seating available for dining, from April 1st through October 31st, provided the merchandise or seating does not block entrances, sidewalks (a minimum of five feet of clear passage must be maintained), or obstruct Visibility Triangles.
2. In any commercial district, an outdoor display or sale which is located entirely upon a private sidewalk shall not require a Temporary Use Permit.
3. The use of stands or tents in parking areas may be approved as part of a Temporary Use Permit if the applicant clearly demonstrates that sufficient parking will be available for the use and the outdoor activity.
4. The display of newspapers in a newspaper stand shall not be deemed an outdoor business activity.

H. Recycling Centers

The location of a recycling center shall require approval of a Conditional Use permit and Site Plan. Any proposal shall include screening, landscaping, and circulation plans. Recycling Centers shall serve as drop off areas for general household recycling purposes. The use of trucks, or commercial haulers, to drop recyclables at recycling centers shall be prohibited. The Board may place conditions necessary to meet the purposes of this Section, including restrictions on the size of the facility and operating hours. Recycling centers shall only be approved in Commercial, Industrial or Planned Exposition Districts.

I. Solid Waste Collection Point.

Any proposal for a solid waste collection point or transfer station shall require approval of a Conditional Use permit and a Site Plan. The proposal shall include screening, landscaping, and circulation plans. At a minimum, these centers shall be landscaped and screened from view from public streets and adjoining properties. Solid Waste Collection Points shall not

be directly connected to storm drainage systems or directly run off into storm drainage systems. Conditions may be placed upon any application including, but not limited to, restrictions on the hours of operation, access, limitations on the numbers and types of trucks and commercial vehicles, and increased setbacks from business and residential areas. The Board may require that storing and sorting occur in entirely enclosed structures. Garbage pickup centers shall be approved only in Commercial, Industrial, or Planned Exposition Districts.

J. Dumpsters or Other Trash Containers:

No dumpster or trash container shall be located or used in any District except in conformance with these standards or approval of a Site Plan.

1. All dumpsters or trash containers located within any District shall be screened from view from the public right-of-way by a nontransparent fence and/or landscaping materials to a height of six (6) feet.
2. Dumpsters shall be covered, and drainage plugs shall be installed. Covers may only be opened for depositing refuse or for emptying of the dumpster. Open top temporary use dumpsters are exempted.
3. All dumpsters or trash containers shall be made of non-combustible materials, with solid sides and a cover suitable in design and construction for the deposit of trash.
4. All trash containers or dumpsters shall comply with the following requirements for separation from structures:
   (a) No less than five (5) feet from a non-combustible structure with a flat roof.
   (b) No less than five (5) feet from a non-combustible structure with a wall height of twenty (20) feet or more.
   (c) No less than fifteen (15) feet from any structure built of combustible material.
5. The provisions of this Section shall not apply to any residential use up to a four family dwelling.

K. Tennis, Basketball or Volleyball Court

These facilities, or similar private recreation facilities, such as outdoor skating rink facilities, may be located in rear or side yard setbacks within five (5) feet of any property line; provided, however, they may not be located in any drainage or utility easement. A single basketball hoop may be located within a front yard, provided that it is located on or adjacent to a driveway and that it is located no closer than ten (10) feet to any public sidewalk, bicycle, pedestrian lane, or right-of-way.

L. Swimming Pools

No swimming pool shall be used or located within any District without conformance to the following standards:

1. Lighting shall be located to prevent direct glare at the lot line.
2. All in-ground pools shall be completely enclosed by a wall, fence or other structure not less than four (4) feet in height. Entrance to a swimming pool shall be from a self-latching and self-closing gate except that the door of any residence forming

any part of the enclosure need not be so equipped. The use of hedges or natural barriers may be allowed if it is of sufficient density to bar entry to the pool.

3. No overhead electrical wires shall cross the pool area or be installed within fifteen (15) feet of the pool surface.

4. Above-ground pools need not meet the fencing requirement of Section L.2 above, if evidence is submitted that entrance to the pool is possible only through the use of steps or stairs, which are portable, and removed when the pool is not in use, or unless accessible from the house.

M. Garage Sales, Yard Sales

Within any Residential Zoning District, garage sales or yard sales of common household goods and appliances may be approved upon submittal of a Temporary Use Permit application pursuant to Section 502(d). Temporary sales for the above purposes shall be permitted for a period of three (3) days. No more than four (4) permits for any one location may be issued in any calendar year.

SECTION 707: FENCES

A. Purpose

To provide standards for the construction or placement of fences.

B. Standards

Any fences placed or located on any property shall meet the following standards:

1. A fence which does not exceed six (6) feet in height may be located at the property line in any side or rear yard and shall not require a zoning permit. Any fence which exceeds six (6) feet in height shall be deemed a structure.

2. No fence may be erected or constructed in such a manner to interfere with any required Visibility Triangle.

3. No fence may be erected or constructed within a public right-of-way or easement. If unavoidable, the fence shall have a removable panel for access to the infrastructure which the easement is granted for.

4. Any fence located adjacent to a publicly owned or maintained sidewalk, bikepath or pedestrian way shall not be located closer than two (2) feet to such public facility.

5. Any nontransparent fence located in a front yard shall not exceed twenty-nine (29) inches in height unless it meets the front yard setback for the Zoning District in which it is located.

6. A chain link fence, not to exceed six (6) feet in height, may be located along the side or front property lines within Commercial or Industrial Districts after Site Plan approval. The fence shall be located and maintained in such a manner that it does not interfere with pedestrian or vehicular vision. The Development Review Board may require landscaping.

7. The use of barbed wire fencing is prohibited except as specified under exceptions below.

C. Exceptions

1. Property located in a Planned Agriculture District may use barbed wire for fencing purposes, provided that said fencing is utilized strictly for agricultural purposes. Properties in the Light Industrial District may also use barbed wire fencing. However, conditions may be imposed upon approval to provide minimal impacts on neighboring properties.
2. The Development Review Board may authorize the use of fences which exceed the six (6) foot requirement for non-commercial, Industrial, or Planned Exposition Districts. The Development Review Board may authorize exceptions only for security or safety purposes and may require landscaping to mitigate visual impacts.
3. In accordance with the standards for Planned Development approval, the Development Review Board may approve alternative standards which are designed specifically as a part of an overall development plan including perimeter walls around the development or other effective visual treatments.

SECTION 708: SCREENING/BUFFERING

A. Purpose

To provide sufficient screening and buffering to mitigate the potential negative impact of adjoining incompatible land uses.

B. Standards.

1. Any Industrial District located adjacent to a residential District shall provide a buffer not less than fifty (50) feet. The buffer shall be landscaped and fenced in such a manner as to minimize impact on the adjoining Residential District.
2. Any Commercial use located adjacent to a residential use shall provide a buffer zone of not less than twenty (20) feet. The buffer zone shall be landscaped in such a manner as to minimize impact on the adjoining residential use. A fence and/or hedge not less than six (6) feet in height may be required. Any fence and /or hedge erected for this purpose shall be of sufficient size and density to block vision at eye level within two (2) years of planting. The use of berms is encouraged and may be required by the Development Review Board as a Site Plan condition.
3. Any multi-family use located adjacent to a single-family use shall provide a buffer zone of not less than fifteen (15) feet. The buffer zone shall be landscaped in such a manner as to minimize impact on the adjoining single-family use. The Development Review Board may require the placement of an opaque fence and/or hedge to screen the multi-family structure from adjoining single-family dwellings. Any multi-family development in the Village Center District that is adjacent to a single family use that is also in the Village Center District shall not be required to provide a fifteen (15) feet buffer zone.
4. Parking lots located adjacent to public streets shall be screened to minimize glare and vehicle light encroachment on the street. Screening may include berms and landscaping.
5. Waivers. The Development Review Board may waive the screening and

buffering requirement if it determines that the encroachment will not have an undue adverse impact on adjacent properties.

SECTION 709: PRIVATE STREETS

A. Standards

The Development Review Board may approve a Private Street only as a part of a Planned Development application. The following conditions shall apply to any private street:

1. The applicant shall submit documentation common to all properties to ensure the continued maintenance of the Private Street.
2. The applicant shall submit documentation to ensure snow removal on the Private Street, as well as include the snow storage area on the plans.
3. Private streets shall meet the requirements of Chapter 9 and Appendix A. Private
Streets shall be built with the same cross section as a Public Street as outlined in Detail 2 of Appendix A.
4. No new private street shall be accepted by the City for maintenance or snow removal without conforming to all street standards specified in Chapter 9.
5. The City shall not be responsible for snow removal or maintenance on any sidewalk located on a private street.
6. The following streets must be provided as public streets and dedicated to the City, unless waived by the Development Review Board upon determination the waiver would be consistent with the provisions of Section 917 of the Land Development Code:
   (a) The principal entry to a planned unit development.
   (b) Roads servicing or planned to service adjacent properties.
   (c) Internal roads, which will carry daily traffic in excess of seven hundred and fifty (750) vehicles based on current trip generation rates published by the Institute of Transportation Engineers.
   (d) Other streets as determined by the Development Review Board.

B. Existing Private Streets

The City shall not accept any existing Private Street or sidewalk for snow removal or maintenance until the facilities meet the standards specified in Chapter 9.

SECTION 710: VISIBILITY TRIANGLES

A. Purpose

To provide clear and unobstructed vision for pedestrian and vehicular traffic at all intersections and driveways.

B. Intersections

On any corner lot, no fence, wall, screen, sign, structure or foliage shall be erected, placed, constructed, planted, or allowed to grow in such a manner as to encroach upon the Visibility Triangle.

1. The Visibility Triangle shall be determined as follows: starting at the intersection of the property lines along the intersecting streets, measure away from the point of intersection a distance of twenty (20) feet along both property lines. Connect these points with an imaginary line. The visibility triangle shall be the triangle defined by the two property lines and the imaginary line.
2. Within this Visibility Triangle, nothing shall encroach upon lines of vision between the heights of thirty (30) inches and eight (8) feet.

C. Driveways

At a point where any driveway intersects with a public street, no fence, wall, screen, sign, structure or foliage shall be erected, placed, constructed, planted, or allowed to grow in such a manner as to encroach upon the Visibility Triangles on either side of the driveway.

1. The Visibility Triangles shall be determined as follows: starting at the intersections of the front property line and the edges of the driveway, measure away from the points of intersection a distance of ten (10) feet along both property line and the edges of the driveway. Connect these points with imaginary lines. The Visibility Triangles shall be the triangles defined by the property line, the edges of the driveway and the imaginary lines.
2. Within these Visibility Triangles, nothing shall encroach upon lines of vision between the heights of thirty (30) inches and eight (8) feet.

D. Exceptions

The following items are exempt from the Visibility Triangle requirement.

1. All plantings or structures not within Visibility Triangles described in B. and C. above, measured at the high point of the street along the right-of-way line.
2. The Visibility Triangle shall not apply to the trunk of an existing tree provided that it is trimmed to meet the vision requirement in B. and C. above.
3. Fire hydrants, public utility poles, street markers, traffic control devices, mailboxes, or other items which by their nature must be located within the Visibility Triangle.
4. Public bus benches.
5. Telephone booths, parking areas, bus shelters, signs, bicycle racks, and similar structures are prohibited.
6. Vegetation related to Green Stormwater Infrastructure or Low Impact Development may be located in Visibility Triangles provided it does not exceed the height requirements as described in B. and C. above.

SECTION 711: HOME OCCUPATIONS

Nothing in this Code shall infringe upon the right of any resident to use a minor portion of a dwelling or garage for an occupation which is customary in residential areas and which does not change the character thereof.

A. Purpose:

1. To protect residential areas from potential adverse impact of excessive traffic,

nuisance, sound and other effects of occupational activities within residential neighborhoods.

2. To establish criteria and development standards for Home Occupations conducted in dwelling units.

3. To provide residents the option to use their residences for certain Home Occupations without altering the residential character of the neighborhood.

4. To assure that public and private services including streets, drainage, water and sewer systems, and other public facilities and services are maintained as designed for residential purposes.

B. Review Criteria

All Home Occupations shall meet the following review criteria and standards:

1. The Home Occupation shall be conducted entirely within the dwelling unit or garage by residents of the dwelling.

2. No employees other than residents of the dwelling are permissible.

3. The area utilized for the Home Occupation shall not exceed twenty (20) percent of the floor area of the residence, including garages.

4. Merchandise offered for sale shall be clearly incidental to the Home Occupation, provided, however, that orders may be taken for later delivery off premises.

5. Delivery of products for a home business shall occur no more frequently than once daily. Vehicles not ordinarily utilized for residential delivery shall be prohibited.

6. No toxic, explosive, flammable, combustible, corrosive, etiologic, radioactive or other hazardous materials shall be used or stored on the premises.

7. No mechanical equipment other than that ordinarily utilized for household or hobby purposes shall be permitted.

8. No activity shall be conducted on the premises which would interfere with radio or television transmission, nor shall there be any offensive sound, smoke, dust or heat noticeable at the property line.

9. The operation of the Home Occupation shall not cause or encourage vehicular or pedestrian traffic not ordinarily associated with the residential area in which the Home Occupation is located except under the following conditions:

(a) Public access to the Home Occupation shall be by invitation only and no more than one (1) vehicle not owned by the occupant may be parked on or adjacent to the property for business purposes. Appointments may overlap for a time period not exceeding thirty (30) minutes.

(b) Occasional parties or meetings associated with the business shall occur no more frequently than four (4) times monthly. Special arrangements must be made to provide sufficient parking so vehicles in no way impede the safety and flow of traffic within the neighborhood.

10. On-premise advertising shall be limited to one (1) non-illuminated sign not exceeding one (1) square foot, and it shall be neutral in color.

11. Public access to Home Occupations shall be restricted to the hours of 8:00 am to 9:00 pm.

SECTION 712: OPEN SPACE REGULATIONS.

Except as specified in this Code, no building, structure or vehicles shall encroach upon any required setback or designated Open Space area. All required setbacks shall be maintained in vegetative cover and shall not be covered with any impermeable surface materials except in Commercial Districts where the Development Review Board may approve specific alternatives.

SECTION 713: STORM WATER MANAGEMENT.

A. Purpose.

The purpose of this Section is to allow no increase in stormwater runoff as a result of any land development activity. The Stormwater Management Section of this Code has been adopted in recognition of the following: that clearing and grading during construction activities increases soil erosion, which in turn negatively affects aquatic and terrestrial habitats; that the creation of impervious surfaces associated with land development increase stormwater runoff rates and volumes, flooding, stream channel erosion, and the transport and deposition of sediment and pollutants and decrease groundwater recharge and stream base flow; that the elimination of illicit discharges and the proper design, construction, operation and maintenance of stormwater systems are crucial for protecting the environment, public health and safety; and, that economic loss and stream water quality degradation can result from these adverse impacts.

B. Construction Site Stormwater Runoff Control

1. Applicability. This subsection shall apply as follows:

(a) New Development or Redevelopment: All new development, construction or reconstruction shall be in full compliance with the provisions of these regulations.

(b) Existing Developed Areas. Compliance required: All property with existing development, which is not in compliance with the provisions of this Section shall be considered non-conforming, and allowed to continue until such time as application is made to add, enlarge or reconstruct a structure on the property. At that time a plan showing existing and new development and the proposed plan shall be submitted.

(c) Agricultural operations shall be regulated by the Agricultural Department best management practices.

2. State Permits.

(a) The City shall accept a State of Vermont General Permit for construction site runoff as evidence of meeting City erosion and sediment control permit requirements for those projects that fall under the jurisdiction of the State requirements. General requirements may be waived by the Public Works Superintendent or Water Quality Superintendent or their designee if the applicant conforms to the State of Vermont Best Site Management practices as outlined in: "The Low Risk Site Handbook for Erosion Prevention and Sediment Control" (as amended) or in the "Vermont Erosion Prevention and Sediment Control Field Guide" (as amended) the state guidelines are available at:

http://www.anr.state.vt.us/dec/waterq/stormwater/htm/swcgp.htm

(b) For all development reviewed and approved under the zoning permit approval process or site plan process, the City hereby incorporates by reference the permit application requirements covered under the Vermont General Permit 3-9020 for stormwater runoff from large construction sites to waters within the jurisdictional area of this Code, which are not principally impaired by collected stormwater runoff.

(c) For all development reviewed, the City hereby incorporates by reference the permit application requirements covered under the Vermont Individual Construction Permit for stormwater runoff from large construction sites to waters within the jurisdictional area of this Code, which are impaired by stormwater runoff. The City also incorporates by reference any applicable requirements in a TMDL issued for impaired receiving waters located within the jurisdictional area of this Code.

3. No person shall be granted a Zoning Permit or other approval by the City for any land disturbance activities regulated under this Code without compliance with the following provisions

(a) All projects involving land disturbance within the City of Essex Junction for which a Zoning Permit or other approval has been issued shall require the permittee to demarcate physically the limits of land disturbance on the site; using measures as described in the "The Low Risk Site Handbook for Erosion Prevention and Sediment Control" (as amended), and; shall advise the permittee to take reasonable steps as outlined in the 2017 Vermont Stormwater Management Manual, Rule, and Design Guidance document to ensure that sediment and eroded materials are not transported via overland flow to surface waters or the MS4.

(b) Projects disturbing more than one acre of land, either individually or as part of a Common Plan of Development, shall require evidence of application and submission of an Erosion and Sediment Control Plan to the Vermont Department of Environmental Conservation for coverage under the Vermont Construction General Permit 3-9020 (2006) for Stormwater Runoff from Construction Sites, as amended, or an Individual Construction Stormwater Discharge Permit, whichever is applicable.

(c) Projects disturbing less than one acre of land, whether individually or as part of a common plan of development, that are not subject to the requirements of the Vermont Construction General Permit 3-9020, but meeting any of the criteria enumerated in 1 through 4, below, shall require approval of an Erosion and Sediment Control Plan, as defined in this Code, by the Water Quality Superintendent:

(i) Any project disturbing more than 1,000 square feet (SF) of land area within a stream corridor and tributaries of Indian Brook or Sunderland Brook as depicted on Map 1 of the Comprehensive Plan.

(ii) Any project disturbing more than 5,000 SF of land area located within the boundaries of a Stormwater Impaired Watershed, as defined

in this Code.

(iii) Projects disturbing more than 10,000 SF of land area outside a Stormwater Impaired Watershed.

(iv) Any project that, in the opinion of the Community Development Director and or the Water Quality Superintendent, has the potential to cause significant erosion, result in the transport of sediment to surface waters or the MS4, or endanger property or public safety if not properly mitigated and controlled.

4. Stormwater Management Performance Standards: Stormwater conveyance systems designed for the infiltration of stormwater, are required providing that underlying soil conditions allow for infiltration without negative impact on adjacent roads, structures, etc. The use of Low Impact Design site design approaches and Green Stormwater Infrastructure best management practices that reduce runoff rates, volumes and pollutant load should be maximized to the extent possible.

(a) Site designs for both new development and redevelopment shall maximize stormwater volume reduction through infiltration, recharge, reuse, and/or evapotranspiration and utilize pervious areas for stormwater treatment. Site designs shall accommodate the peak flow rates of stormwater discharge associated with specified design storms, flood control and soil quality standards as specified in the *Vermont Stormwater Management Manual Rule and Design Guidance (as most recently amended)*. When directed by staff applicants shall use the STP calculator https://dec.vermont.gov/watershed/stormwater/permit-information-applications-fees/ms4-permit/ms4tracking to ensure these standards are met.

(b) Before proposing to use gray stormwater infrastructure practices, applicant must demonstrate why the use of Low Impact Design approaches and Green Stormwater Infrastructure best management practices are not possible.

(c) For new development, structural stormwater treatment practices (STPs) shall be designed to maximize removal of annual post development total suspended solids load (TSS) and total phosphorous, unless a TMDL has been established requiring a more stringent criteria in the receiving water. Site designs shall be in accordance with criteria outlined in the *Vermont Stormwater Management Manual Rule and Design Guidance (as most recently amended)*; constructed properly, and maintained regularly.

(d) For new development and redevelopment that trigger a stormwater permit under this code a stormwater management plan is required showing documentation of the phosphorus loading and reduction calculations. The *Vermont Department of Environmental Conservation Best Management Plan Tracking Spreadsheet* which includes phosphorus loading and reduction (pre- and post development) shall be submitted.

(e) The post-development peak discharge rate shall meet the criteria in the most recent version of the *Vermont Stormwater Management Manual Rule and Design Guidance.*

(f) To protect stream channels from degradation, specific channel

protection criteria shall be provided as prescribed in the most recent version of the *Vermont Stormwater Management Manual Rule and Design Guidance (as amended)*.

(g) Stormwater discharges from intensive land uses or activities with higher potential pollutant loadings, known as hotspots, may require the use of specific structural STPs and pollution prevention practices.

C. Erosion and Sediment Control Plans

1. For projects for which an Erosion and Sediment Control Plan has been approved, the Water Quality Superintendent or their designee shall make inspections as hereinafter required and either shall approve that portion of the work completed or shall notify the permittee via mail, telephone or email of any instance wherein the work fails to comply with the Erosion and Sediment Control Plan as approved.

2. To obtain inspections, the applicant or their agent shall request an inspection from the Water Quality Superintendent via email, or telephone at least ten (10) business days before commencement of any of the following, unless an agreement has been executed for the applicant to provide certification in accordance with Section 713.D, below.

3. For all activities for which Zoning Permits have been issued for a non-residential use, condominium, floodplain modification, new single- or multi – family.

(a) Start of construction, at which time the inspection shall include inspection of the limits of disturbance to ensure the limits are correctly and fully demarcated on the site;

(b) Installation of all sediment and erosion control measures;

(c) Completion of final landscaping.

4. For projects where land disturbance will occur or construction will not be fully completed between October 15th and May 15th (i.e. winter season), an additional inspection is required before November 15th of each year to ensure that winter season stabilization measures are in place.

5. In the event that, in the judgment of the Water Quality Superintendent or their designee additional inspections are necessary to ensure conformance with the approved Erosion and Sediment Control Plan, additional inspections upon twenty-four hours' written, verbal, or email notification to the property/parcel owner may occur. Approval for such inspections shall not be unreasonably withheld by the property/parcel owner.

6. If upon inspection, the site is not in compliance with erosion standards and a TMDL has been issued for the stormwater impaired receiving water located within the jurisdictional area of this Code, the zoning permit will be deemed invalid until appropriate erosion and sediment control practices are implemented.

D. Inspection Certifications

In lieu of the requirements outlined in Section 713.C of this Code, the Water Quality Superintendent may, upon written request of the applicant, allow or require that the applicant or their agent provide a written certification from a professionally licensed engineer, or a certified professional in erosion and sediment control (CPESC), certifying

compliance with the Erosion and Sediment Control Plan as approved upon completion of the activities enumerated in Section 502 above. The applicant or their agent shall make regular inspections of all control measures in accordance with the inspection schedule outlined on the approved Erosion and Sediment Control Plan and shall provide written certification to the Water Quality Superintendent or his/her designee upon completion of each inspection, noting any remedial action required to achieve compliance with the Erosion and Sediment Control Plan.

E. Exemptions

The discharge of any sediment from land disturbance activities approved by the City to any other parcel, the MS4, and or surface waters is prohibited except as described as follows:

(a) Any emergency activity that is immediately necessary for the protection of life, property or natural resources.

(b) Any agricultural activity operating as permitted by the State of Vermont Department of Agriculture.

F. Stormwater Systems Designed for Turn Over to the City

Stormwater systems designed for turn over to the City shall be maintained in accordance with permit requirements by the permittee. All provisions for compliance shall be the responsibility of the permittee until transfer of permit processes is completed.

(a) All proposals for stormwater systems to be turned over to the City for operation and maintenance shall meet or exceed City and State design standards outlined in the most recent version of the *Vermont Stormwater Management Manual Rule and Design Guidance (as amended).*

(b) Prior to acceptance by the City, the applicant shall submit as-builts of the infrastructure and a final inspection shall be conducted.

(c) Prior to acceptance by the City, the developer shall ensure that the stormwater system is clean and in good working condition and all easements for access to infrastructure are recorded in the land records and a copy provided to City Water Quality Superintendent

(d) Only stormwater facilities with valid permits will be considered for acceptance by the City of Essex Junction. Stormwater system infrastructure will only be accepted by the City along with other infrastructure accepted for community ownership. No stormwater system will be accepted unless it is deemed in the interest of the City of Essex Junction.

G. Maintenance of Permitted Stormwater Systems

Should a property owner fail to maintain stormwater infrastructure in accordance with the terms and conditions of this Section, state or other stormwater permit requirements, the City of Essex Junction shall provide written notice of violation. The City of Essex Junction may pursue any steps deemed necessary to prevent or minimize damage to the City storm drainage infrastructure or to the waters of the state.

After written notice of system deficiencies, the property owner/owners representative shall be responsible for carrying out necessary maintenance work to correct the noted deficiencies. Correction shall be required within thirty (30) days. Other reasonable time frames may be assessed if mutually agreeable to the City and the property owner.

When the violation creates a situation of immediate danger to public health or public safety, the City of Essex Junction may perform any necessary immediate work to stabilize the situation. The City maintains the right to assess the property owner for any direct repair costs which shall be a lien on the property.

The Water Quality staff in conjunction with the Community Development Department shall administer, implement and enforce this stormwater management code.

SECTION 714: SIGN STANDARDS.

A. Authority and Intent

These regulations are enacted under the provisions of 24 V.S.A. Section 4411 with the intent to ensure that all Signs and advertising features:

1. Effectively maintain a safe and orderly pedestrian and vehicular environment by being legible and not distracting to motorists, cyclists, and pedestrians;
2. Reduce potentially hazardous conflicts between Signs and traffic control devices;
3. Compliment their surroundings, and protect and promote neighborhood and community character;
4. Effectively optimize communication that support the community's sustained economic development, and reduce visual clutter within or directed upon the public realm; and,
5. Are an enhancement to the City's built environment, and are harmonious in size, design, color, material, and lighting with the building to which it relates, without removing, obscuring or detracting from the community's character, history, and architecture.

The regulations on signs under this Chapter are intended to be content-neutral, where the City considers only the physical aspects of the Sign, not content.

B. Permit Required

All Signs shall require the issuance of a zoning permit subject to the standards of this Section before public erection and display unless otherwise specifically exempt by this Section. All Signs must be maintained in a condition or state of equivalent quality to which it was approved or required by the City. A sign permit shall expire if not erected within one (1) year from the date of approval.

C. Exemptions

Repainting, refacing, repair, or change of lettering, logo, or colors using the same materials within an existing permitted Sign frame shall be exempt from the requirements of this Section and allowed without the requirement to obtain a new zoning permit.

The following types of Signs are permitted in all parts of the city, and shall also be exempt from the requirements of this Section and the necessity to obtain a permit:

1. Highway and Official Signs. Signs within the public right-of-way or along a public thoroughfare designed and placed in conformance with the Manual on Uniform Traffic Control Devices (MUTCD) published by the US Dept. of Transportation, and other public information, traffic control, identification, special event, directional, public notice, and other such Signs erected by or at the direction of a government agency, court, or public utility in the performance of their public duty.
2. Election Period Signs within City Right-of-Way. Temporary signs or banners no larger than six (6) square feet may be displayed for a period not to exceed two (2) weeks leading up to a local, state or federal election within the City Right-of-Way unless city staff determines a sign to be a hazard to public safety. These signs shall be removed within 3 days after the election.
3. Public Notice Signs on Publicly Owned Property. Signs authorized by the City, placed on publicly owned property for the purpose of public notice are exempt from the requirements of this Section.
4. Street Address Identification. Numerals that identify the street address of the property so that it can be easily identified from a public thoroughfare by patrons, guests, and emergency responders provided such numerals are a minimum of 3-inches and maximum of 10-inches in height, and the area of the numerals does not exceed two (2) square feet. In cases where the building is not located within view of the public street, the numerals shall be located on a mailbox or other suitable device such that it is visible from a public thoroughfare.
5. Electronic Message Board. One- or two-sided free-standing signs for municipal departments, which are used to provide public information, and are deemed to meet the intent of Section 502.H.1. Such signs must be approved by the Development Review Board and City Council, may not exceed thirty (30) square feet per side, must be at least five (5) feet from the pavement of any public right-of-way, must not be located within any right-of-way, and may not exceed ten (10) feet in height. Such signs may include an Electronic Message Board not exceeding ten (10) square feet on each side of the sign, which may only be used between the hours of 7:00 A.M. and midnight. Information may be displayed on the message board on an intermittent basis, provided each display is at least five (5) minutes in duration. Each department shall be limited to one (1) sign.
6. Flags:
    a. In the Residential 1 (R1) and Residential 2 (R2) zones: up to 2 flags which may or may not be attached to 1 freestanding pole per lot. Each flag may be up to 15 square feet in area with no single dimension exceeding 5-feet. Any freestanding flagpole shall meet the maximum height and minimum setback requirements per the district-specific dimensional requirements of Chapter 7.
    b. In all other Zoning: 1 flag per 25 feet of a lot's road frontage, up to a maximum of 6 flags which may or may not be attached to up to 6 freestanding poles are permitted. Each flag may be up to 24 square feet in area with no single dimension exceeding 6-feet. The height of any freestanding flagpole shall not

exceed the highest point of the Principal building on the lot or 50-feet whichever is lower and shall meet the minimum setback requirements per the district-specific dimensional requirements of Chapter 7 or 10-feet whichever is more restrictive.

7. Property Management, Information, and Directional Signs. Non-illuminated Signs two (2) square feet or less in size controlling access to a property and/or oriented to and intended primarily for use internal to the property. Examples may include those announcing no trespassing or solicitation; warning of hidden dangers; the private nature of a road or driveway; directional and parking; and regulating fishing or hunting.
8. Signs Inside Buildings. Any Sign which is located completely within an enclosed building and 12-inches or more behind a window or door provided they do not obscure more than 40% of the total window area between 4 and 7 feet above the adjacent sidewalk and otherwise preclude an unobstructed view into the establishment from the sidewalk.
9. Vending Machines and Gas Pumps: Signs incorporated into or upon vending machines or fuel pumps. Internally illuminated vending machines shall not be allowed outside of buildings except in Commercial Districts.
10. Signs Within an Athletic Field or Complex: Any Signs facing inward to the field of play and associated spectators such as those affixed to a wall, window, fence, or scoreboard.
11. Historic Marker: A non-illuminated Wall Sign two (2) square feet or less in size commemorating the historic significance of a building or site.
12. Temporary Signs: Temporary Signs are permitted subject to the standards found in Sec. 714.E Temporary Signs below.
13. Sandwich Boards: Sandwich Boards Signs are permitted subject to the standards found in Sec. 714.L.10 Sandwich Boards Signs below.
14. Directional Signs: In all Districts, any legal business or recreational use, except a Home Occupation, that is not readily visible from a street, may be allowed to erect one (1) off premise directional sign. This sign may not exceed four (4) square feet and must be on an adjacent lot or on a right-of-way owned or leased by the business in question. This directional sign must be set back at least five (5) feet from the edge of the right-of-way. Staff may deny an application for a directional sign in any residential district which in Staff's judgment alters the character of the area.
15. Murals: Non-commercial artistic expression in the form of a unique hand produced work of visual art which is tiled, painted directly upon, or otherwise affixed or placed directly onto an exterior wall of a building or structure provided that the Mural:
    a. does not contain any advertising copy, symbols, lettering, logos or other such recognized branding related to products or services provided on the premises where the mural is located except where otherwise permitted and incorporated into a permitted Sign Type as provided in Secs. 714.B through 714.M Sign Types;
        i. is placed on a Secondary Frontage or non-street-facing side or rear elevation of a Building or Structure; and,
        ii. is not illuminated.

16. Non-illuminated window signs do not require a permit but must comply with the requirements of 714.L.12.

D. Prohibited Signs

The following types and characteristics of Signs shall be prohibited in all parts of the City:

1. No person shall paint, paste, brand, stamp, or in any other manner hang, place on or over, or attach to any tree, rocks, or other natural feature; and any utility pole, street light, transformer, hydrant, bench, or any similar object or surface any advertisement, bill, notice, card, Sign, or poster for any purpose unless as permitted by this Section or otherwise installed by or at the direction of the Department of Public Works.
2. Signs that may obstruct the view of approaching or intersecting traffic, or otherwise interfere with the clear and unobstructed view of a highway or official Sign and/or the safe movement of vehicles, bicycles, or pedestrians operating within, entering, leaving, or crossing a public right-of-way, sidewalk, path, or Thoroughfare including those located within a clear sight triangle;
3. Any Sign and/or Sign structure that obstructs the view of, imitates, or otherwise may be confused with a governmental, traffic or safety Sign;
4. Any Sign and copy that mimics the City's E-911 street naming and addressing system by using a fictitious, or "vanity," address consisting of a combination of a number, name, and/or place type (e.g. "1 City Square") that has not been assigned by the City and thus may interfere with the timely and accurate response by emergency services.
5. Signs that interfere with free passage from or obstruct any fire escape, downspout, window, door, stairways, ladder, or Building opening or appurtenance intended as a means of ingress or egress, or providing light or air.
6. Signs located on any property without prior authorization granted by the Property Owner;
7. Any Sign which advertises goods, products, or services which are not sold, manufactured, stored, or distributed on or from the property on which the Sign is located.
8. Signs located on the roofs of buildings or structures, or that project above the roof or parapet line;
9. Signs mounted, attached, or painted on a trailer, boat, motor vehicle, or other mobile conveyance when parked, stored, or displayed conspicuously close to or within the public right-of-way in a manner intended to attract the attention of the public for advertising purposes, except where the motor vehicle or trailer is regularly and consistently used and moved to conduct normal business activities; and,
10. Signs of any of the following types or with any of the following features or characteristics:
    a. Any Sign, portion of a Sign, or other advertising device with:
        i. visibly moving or movable parts; or,
        ii. flashing, animated, or intermittent illumination except for those specifically allowed in Sec. 714.I or Sec. 714.G; or,
        iii. fluorescent paint or tape, mirrors, disks, reflectors, or similar devices which have the effect of intensifying reflected light.

b. Inflatable Signs, such as but not limited to balloons, gas inflated signs, blimps, or similar inflated signs;
c. Portable Signs, except for Sandwich Board Signs as permitted under Sec. 714.L.10 below or by the Department of Public Works for placement in the public right-of-way;
d. Windblown devices such as but not limited to, streamers, spinners, banners, feather signs, pennants, and Flags other than those specifically allowed in Sec. 714.C.3; and,
e. Searchlights, outdoor image projections, or any other similar displays projected from an external light source into the sky or onto any building, structure, right-of-way, or thoroughfare, except as may be allowed on a limited basis for special events by Public Works, Parks Recreation, or City Council.

E. Temporary Signs

The following types of Temporary Signs are allowed in all Districts without the requirement of a zoning permit provided they meet the standards found in Table 714.E – Temporary Signs below:

Table 714.E Temporary Signs

Temporary Banner	
Number of Signs	1 on a primary street frontage
Types Allowed	Wall
Sign Area	50 sf max.
Sign Height	No higher than the floor level of the 2nd story.
Illumination	None
Duration/ Frequency	Shall not exceed 30 consecutive days and a maximum of 2 display periods per calendar year separated by a minimum of 30 days between display periods.
Temporary Sign	
Number of Signs	1 on a primary street frontage.
Types Allowed	Freestanding, Wall, or Window.
Sign Area	6 sf max. for any individual Sign.
Sign Height	Freestanding: 4’ max above the finished grade (including supports), 3’ max if located within a Clear Sight Triangle
	Wall or Window: No higher than the floor level of the 2nd story.
Illumination	None
Duration/ Frequency	Shall not exceed 30 consecutive days and a maximum of 2 display periods per calendar year separated by a minimum of 30 days between display periods.
Real Estate Sign	

Number of Signs	1 on a primary street frontage of a property offered for rent or sale.
Types Allowed	Freestanding, Wall, or Window.
Sign Area	6 sf max.
Sign Height	Freestanding: 4' max above the finished grade (including supports), 3' max if located within a Clear Sight Triangle. Wall or Window: No higher than the floor level of the 2nd story.
Illumination	None
Duration/ Frequency	Shall not be erected prior to the property being offered for sale or rent, and shall be removed within 3 days after a rental agreement has been executed or title to the property has been transferred.
Election Period Sign	
Number of Signs	6 Signs max. per property
Types Allowed	Freestanding, Wall, and/or Window including Banners
Sign Area	6 sf max. for any individual Sign
Sign Height	• Freestanding: 4' max above the finished grade (including supports), 3' max if located within a Clear Sight Triangle • Wall or Window (including Banners): No higher than the floor level of the 2nd story.
Illumination	None
Duration/ Frequency	Shall not be erected earlier than 60 days prior to an election and shall be removed within 3 days afterwards.
Construction Site Sign	
Number of Signs	1 per street frontage max.
Sign Types Allowed	Freestanding or Wall.
Total Sign Face Area	32 sf max in a Residential district; or, 64 sf max in all other districts.
Sign Height	8' max.
Illumination	None
Location	Installed on the premises of a project under construction.
Duration/ Frequency	Installed no sooner than one week prior to the commencement of construction and shall be removed within 24 hours of completion of construction or if the project ceases construction for 12 months or longer.
Construction Site Wrap	
Number of Signs	1 per street frontage max.
Sign Height	12' max.
Illumination	None

Location	Installed along the perimeter of the premises of a project under construction. Must not be located within any public street right-of-way unless permitted by the Department of Public Works.
Duration/ Frequency	Installed no sooner than one week prior to the commencement of construction and shall be removed within 24 hours of completion of construction or if the project ceases construction for 12 months or longer.
Construction/Real Estate Window Wrap	
Number of Signs	1 per window and door max.
Sign Area	May fill the entire glazed portion of the window and/or door.
Sign Height	No higher than the ceiling level of the 1st story.
Illumination	None
Location	Installed on the premises of a project under construction.
Duration/ Frequency	Shall not be erected prior to the property being offered for sale or rent, or one week prior to the commencement of construction, and shall be removed within 3 days after a rental agreement has been executed or title to the property has been transferred or within 24 hours of completion of construction.

F. Non-Conforming Signs

Any legally pre-existing Sign or other advertising device which does not conform to the current provisions of this Section shall be deemed a non-conforming Sign. Non- conforming Signs may remain in use at the same location, and ordinary maintenance and repair of such Signs shall be permitted. A non-conforming Sign shall not be relocated, enlarged, replaced, redesigned, or altered in any way (except for repainting, refacing, repair or a change of lettering, logo, or colors using the same materials within the existing Sign frame) except to bring the Sign into complete or substantially greater compliance with this Section. In such cases, the DRB may allow a new Sign to be in substantially greater compliance than the existing non-conforming Sign subject to the applicable requirements of this Section. Non-conforming signs that are destroyed or damaged by 50% or more of their value shall not be rebuilt or repaired after one (1) year except in full conformance with this Section. Value shall be determined based on replacement cost.

The following types of non-conforming signs shall be altered to comply with the provisions of this article or removed within ninety (90) days after the effective date of this Code:

1. Portable signs and temporary signs.
2. Signs that are in violation of Section 714.E.

G. Discontinuance and Removal

Any Sign advertising an activity, business, service, or product must be removed, or the Sign face replaced with a blank face, within 60 days of the activity, business, or service promoted by the Sign being discontinued on the premises where the Sign is displayed. If the use is not reestablished, or a new use is not established, within one (1) year, then the

entire Sign Structure and mounting hardware shall be removed.

H. Sign Permit Applications, Submission Requirements, Review and Decision-making

An application is necessary for those requests pertaining to all Signs covered by the requirements of this Section. Submission requirements shall also include all the following as applicable:

1. A completed application form, and signed by the property owner, along with the applicable fee;
2. A scaled rendering of the proposed Sign indicating its dimensions in square inches or feet (length, width, height), and all materials and colors used;
3. Applications involving Freestanding, and Monument Signs shall include a scaled site plan indicating the location of all existing and proposed Signs on the lot, all setbacks in feet from the property lines and/or rights-of-way, and the location of any Clear Sight Triangle.
4. Applications involving Awning, Blade, Canopy, Marquee, Nameplate, Outdoor Display Case, Projecting, Window, and/or Wall Signs shall include scaled building elevations indicating the location of all existing and proposed Signs on the building façade and the frontage dedicated to the establishment in linear feet.
5. Where applicable, the type and method of illumination (i.e. external, internal, or backlit), including the fixture style, placement, and bulb wattage and type. Applications involving an Electronic Changeable Message must also provide written certification from the sign manufacturer that the luminance of the display has been factory pre-set so that it will not exceed 5,000 nits.
6. The total square footage of all existing Signs for the establishment; and,
7. Photographs of the building or site where the Sign is proposed.

I. Calculation of Sign Area and Height

1. The following shall govern the calculation of a Sign's area:
   a. The area of a Sign shall include all numerals, lettering, designs, logos, or symbols, together with the background, whether open or enclosed, upon which they are displayed. Not included are any supporting framework incidental to the display itself unless under Secs. 714.L.1 through 714.L.12 Sign Types.
   b. Where a Sign consists of only individual numerals, letters, logos, or symbols attached, painted, or applied directly to a door, wall, or window, the area shall be considered the smallest polygon which would enclose the sign encompassing all the letters and symbols. (See Figure 714.I.1)

Figure 714.I.1 Area of a Sign affixed directly on a wall or window.

c. If a Sign has two or more faces, the area of all faces is included in determining the maximum area of the Sign, unless the two faces are identical and placed back-to-back or are no more than two feet apart. In such case, the Sign area is calculated as the area of one face. If the two faces are unequal in area, the area of the larger face is used to calculate Sign area.

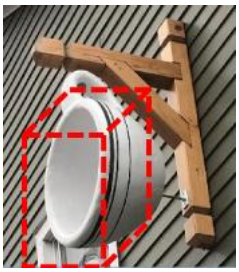

d. The Sign area of a three-dimensional, free-form, or sculptural (non-planar) Sign is calculated as 50% of the sum of the area of the four vertical sides of the smallest cube that will encompass the Sign.

e. The maximum allowable area of a Sign shall include all permanent Signs attached, painted, or applied to a building façade. If an establishment has walls fronting on two (2) or more streets, the Sign area for each street shall be computed separately.

f. Limitations on the height of lettering shall pertain only to the height of individual characters.

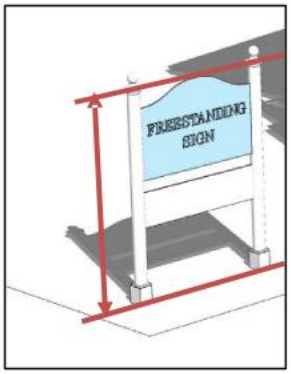

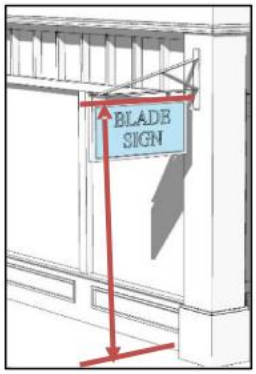

2. Unless described otherwise under Secs. 714.L.1 through 714.L.12 Sign Types, the following shall govern the calculation of a Sign's height:

a. Sign height overall is measured as the vertical distance from the finished grade at the base of a freestanding Sign, or of a building or structure for an attached Sign, to the highest point of the Sign.

b. For Signs attached to and projecting from a building or structure, vertical clearance is measured as the vertical distance from the finished sidewalk level to the lowest point of the Sign or Sign structure.

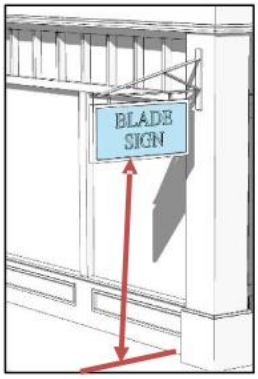

J. Sign Lighting

The following requirements shall pertain to the lighting of all Signs:

1. The eligibility of lighting for any Sign shall be as indicated under Secs. 714.L.1 through 714.L.12 Sign Types.
2. All Signs shall be illuminated such that the illumination is steady and stationary, directed solely at the Sign or internal to it, and does not create glare or unduly illuminate the surrounding area.
3. The luminance of any Sign shall not exceed 250 nits between dusk and dawn, as measured from the brightest element of the Sign's face. Dusk and dawn are defined as, respectively, the time starting at one-half hour before sunset and one-half hour after sunrise, as determined by the National Weather Service (actual time).
4. External Illumination:
   a. Light fixtures shall be located, shielded, and directed such that the light source is directed only onto the Sign face.
   b. Neither the light source nor reflective surfaces of the fixture shall be visible from

the public way or surrounding properties.

c. Light fixtures used to illuminate signs shall be top mounted and shall direct the light downward toward the sign.
d. Ground mounted lights shall not be used unless under special circumstances where conditions of (3) above cannot be met. In such cases, the receptacle or device housing the light source shall not extend more than 12 inches above ground and shall be fully screened and housed.
e. Projecting light fixtures must be simple and unobtrusive in appearance and not obscure the Sign.
    i. Reverse Channel Illumination (i.e. Backlit):
        1. Backlit Signs shall light lettering and logo and other related Sign elements only, and lighting design shall be such that no excess light spill or glare results from the back lighting fixtures and/or source.
        2. The light source shall not be visible from the public way or surrounding properties.
        3. Illumination levels shall not increase the measurable vertical light level at any point 20 feet distant from the Sign in any direction.
    ii. Internal Illumination:
        1. Internally illuminated Signs shall be designed such that light passes through the lettering, logo, and other related Sign elements only, and the background shall remain opaque and light transmission shall be blocked.
        2. The Sign cabinet shall fully enclose the light source so that it is not visible from the exterior of the Sign.
        3. The background must be opaque and a darker color than the message of the Sign.
    iii. Direct Illumination (i.e. the use of exposed lamps, such as neon tubes and LED's, that have no shielding and are visible to the eye):
        1. Direct illumination is limited to letters, numbers, symbols, and accents.
        2. Neon signs shall not exceed three (3) square feet in size.
    iv. Raceways, Conduit, Wiring, and Transformers
        1. All electrical raceways, conduits, and wiring shall be contained completely within the Sign assembly or inside the wall and shall not be exposed.
        2. If a raceway is necessary, it cannot extend in width or height beyond the area of the Sign.
        3. A raceway must be finished to match the background wall or canopy or integrated into the overall design of the Sign.
        4. Visible transformers are not allowed.
    v. Electronic Changeable Message:
        1. Where permitted as provided in Secs. 714.L.1 through 714.L.12 Sign Types, Electronic Changeable Message displays shall:

i. Not have any distracting appearance of motion including but not limited to flashing, blinking, shimmering, animation, video, or scrolling advertising.
ii. Limit the luminance of the display not to exceed 5,000 nits at any time.
iii. Have characters of sufficient size to be easily discerned and must not constitute a safety hazard by distraction of drivers where readily visible to drivers of vehicles on any public way.
iv. Consist only of alphabetic or numeric characters on a plain background, and shall not include any graphic, pictorial, video, or photographic images.
v. Utilize a maximum of only one color for the message on a dark background of only one color.
vi. Have a minimum display time of two (2) minutes. When the message changes, it must complete the transition within 1 second or as rapidly as is technologically practicable whichever is less with no phasing, rolling, scrolling, flashing, or blending.
vii. Be equipped with a light detector/photocell that automatically adjusts the display's brightness according to natural ambient light conditions.
viii. Contain a default mechanism that freezes the changeable message in one position, or shuts off the device entirely, in the event of a malfunction.
ix. Limit the area occupied by the electronic changeable message to no more than (50) percent of the maximum total allowable Sign area as provided in Secs. 714.L.1 through 714.L.12 Sign Types.
x. Be limited to a maximum of three (3) lines of characters including all letters, numbers, spaces, or other symbols dedicated to the electronic changeable message.

K. Alternative Compliance

Minor variation and relief any non-numerical standard found in this Section, and any numerical standard by no more than 20% of such requirement, may be granted by the Development Review Board at a Public Hearing.

Decisions by the DRB regarding any Alternative Compliance granted shall be made in writing, and upon affirmative findings that:

1. the relief sought is necessary in order to accommodate a unique circumstance or opportunity;
2. the relief, if granted, will yield a result equal to or better than strict compliance with the standard being relieved;
3. the relief, if granted, is the minimum variation necessary from the applicable standard to achieve the desired result;
4. the relief, if granted, will not impose an undue adverse burden on adjacent

properties; and,

5. the remainder of the Sign will otherwise be developed consistent with the purpose of this Section, and all other applicable standards.

L. Sign Types

714.L.1: Awning & Canopy Sign

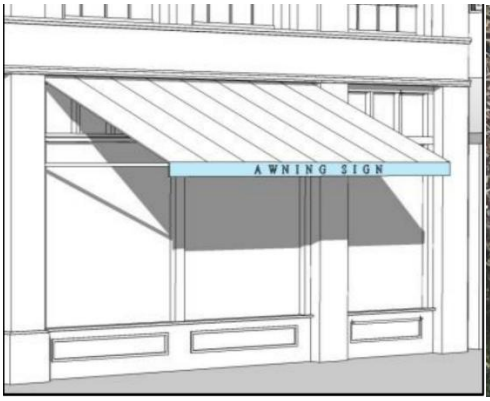

Description

This Sign type consists of one or more faces and is integrated within or part of an Awning or Canopy extending over a principal entrance and/or first floor windows on a Primary or Secondary Frontage, or spanning across an individual storefront or an entire building façade. An awning with letters in the form of a sign shall be considered a wall sign.

Specifications

Location	Only Awnings and Canopies on ground floor doors or windows may contain signs.
Quantity (max)	• 1 per Awning • 3 per Canopy
Area, Lettering (max)	• 75% of the area of the Valance or Canopy face. • 25% of the area of the sloping plane of an Awning.
Height, Lettering (min/max)	• 5-in min; 10-in max on the Valance, or 18-in max on sloping plane of an Awning. • 24” max. on a Canopy • Awnings must clear the sidewalks or ground by at least eight (8) feet.

Miscellaneous

Canopy Signs may be placed on the face and sides of the Canopy or extend above or below the Canopy face provided 8-ft min. clear height above the sidewalk is maintained.

Awning Signs may only be placed on the Valance or sloping plane of the Awning, not both.

Awning Signs shall not be internally illuminated or backlit. Canopy Signs may only be backlit.

Awning or Canopy Signs in a Residential district shall not be illuminated.
The awning may extend to within one (1) foot of the vertical plane created by the curb or right-of-way line. Any encroachment into or over the public right-of-way must also be approved by the Dept. of Public Works and/or City Council as may be applicable.
The top of the awning, where it is attached to the building, shall be no higher than fourteen (14) feet above grade.
Awnings without letters shall be allowed subject to the size and height restrictions above, but the overall number of awnings shall not be restricted.
Awnings may be non-illuminated or externally illuminated only by down directed and shielded fixtures and incandescent bulbs

714.L.2: Band Sign

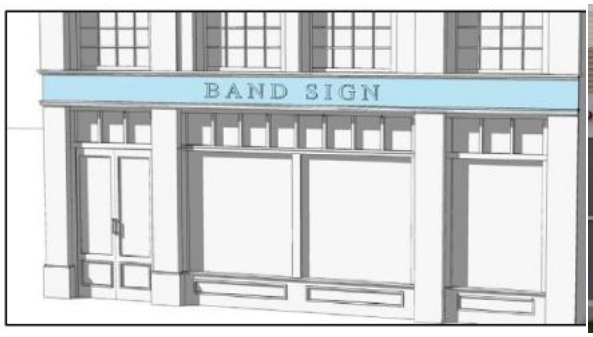

Description

This Sign type consists of a single face, and is placed within a Sign Band that is architecturally integrated into the overall design of the building façade over a principal entrance and spanning across an individual storefront or the entire façade on a Primary Frontage.

Specifications

Quantity (max)	1 Band Sign per street-level storefront.
Width, Sign (max)	Length of the street-level storefront frontage.
Height, Sign (max)	3-ft
Height, Overall (max)	the lesser of the floor level of the second floor or 18-ft above the finished sidewalk.
Depth/Projection, lettering (max)	7-in from the face of the Sign Band.
Area, Sign (max)	75% of that portion of the Sign Band associated with the street-level use.

Miscellaneous

Band Signs shall include only characters, background, lighting, and an optional logo.

If illuminated, Band Signs may only be externally illuminated or backlit.

714.L.3: Blade Sign

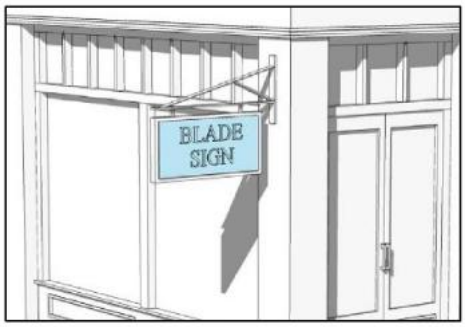

Description

This Sign type consists of 1-2 faces, and projects perpendicular from the Building façade on a Primary or Secondary Frontage, or elevation where street frontage is not available.

Specifications

Location (max)	within 4-feet of a principal entrance.
Quantity (max)	1 per ground floor tenant.
Width, Sign (max)	3-ft
Height, Sign (max)	3-ft
Depth, Sign (max)	6-in
Offset from Building (min/max)	6-in min and 12-in max from the façade.
Projection (max)	4-ft from the façade.
Area, Sign (max)	9 sqft
Height, Clear (min)	8-ft min. above finished sidewalk (the lowest portion of the overhanging sign and/or bracket).
Height, Overall (max)	The lesser of the floor level of the second floor or 18-ft above the finished sidewalk.

Miscellaneous

The bracket must be an integral part of the Sign design.

A Blade Sign erected on a building that adjoins the intersection of 2 streets may intersect at a 45 degree angle to the corner of the building.

A Blade Sign may be attached to the face or underside of a canopy

If illuminated, Blade Signs shall only be externally illuminated. Blade Signs in any Residential, RCO, or Urban Reserve district shall not be illuminated.

Any encroachment into or over the public right-of-way must also be approved by the Dept. of Public Works and/or City Council as may be applicable.

714.L.4: Directory Sign

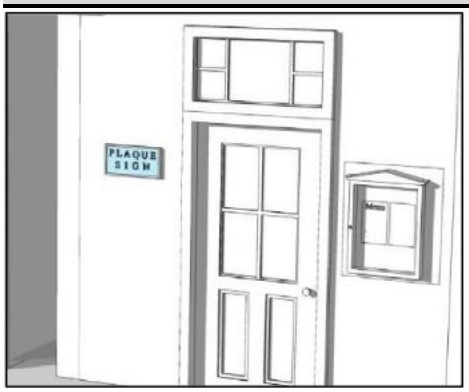

Description

This Sign type has a single face and consists of either a panel or individual letters applied directly to a building wall, typically listing the names of building tenants.

Specifications

Location (max)	within 4-feet and to the side of a principal entrance.
Quantity (max)	1 per principal entrance
Width (max)	18-inches
Height (max)	36-inches
Depth/Projection (max)	3-inches from the façade

Miscellaneous

If illuminated, Directory Signs may only be backlit.

Directory Signs in any Residential, RCO, or Urban Reserve district shall not be illuminated.

714.L.5: Freestanding Sign

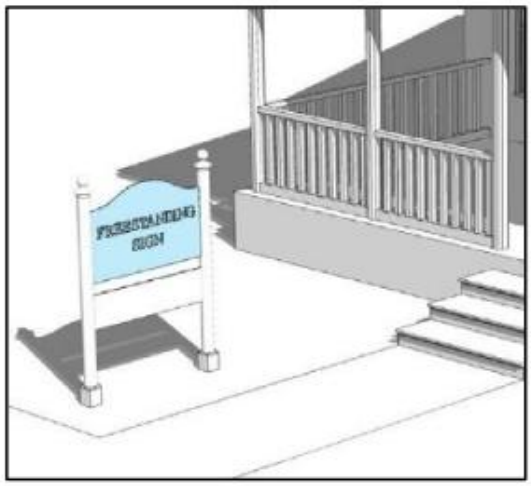

Description

This Sign type consists of 1 or 2 faces, is fully detached from a Building, and placed in a front yard with external support consisting of 1-2 posts.

Specifications

Quantity (max)	1 per lot, per primary street frontage except as specified below*
Width (max)	8-ft (not including supports)
Height	10-ft (not including supports)
Depth (face-to-face) (max)	1-ft
Sign Area (max)	60 sf. (not including supports) or 0.3 sf per linear foot of street facing building frontage whichever is less.
Setback (min)	The lesser of 3-ft from the front properly line or in-line with the building façade, and 5-ft from any side properly line
Height, Overall (max)	14-ft above the finished grade (including supports).

Miscellaneous

No part of a Freestanding Sign may encroach or overhang upon a public right-of-way, clear sight triangle, driveway, parking area, or walkway.

Freestanding Signs associated with a Fuel Service Station may include an electronic changeable message only for the display of numerals.

Freestanding Signs may only be internally or externally illuminated or backlit.

* No lot or group of contiguous lots used for a single development, may have more than one freestanding sign. However, lots with greater than four hundred (400) feet of frontage may

have an additional freestanding sign, not to exceed thirty (30) square feet provided the freestanding signs are at least one hundred and fifty (150) feet apart.

Business with Drive-Through Facilities may have one (1) menu board sign in addition to one (1) free-standing sign. A menu board sign shall not exceed forty-eight (48) square feet and shall be screened from the public right-of-way.

714.L.6: Marquee

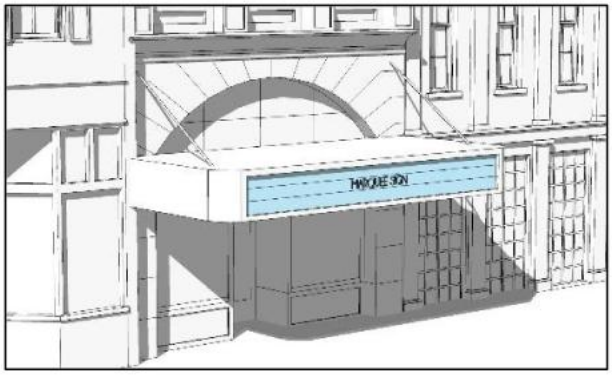

Description

This Sign type consists of 1-3 faces on an iconic structural feature of a Building that projects perpendicular from the façade over a principal entrance.

Specifications

Quantity (max)	1 per primary street frontage.
Width (max)	Width of the street-level frontage associated with the principal entrance
Projection (min/max)	6-ft min.; 10-ft max. from the façade
Setback (min)	No closer than 3-ft from the back of the curb
Area, Sign (max)	75% of any face of the Marquee
Height, Clear (min)	10-ft above the finished sidewalk
Height, Overall (max)	The top of the Marquee shall be no more than the lesser of the floor level of third Story or 35-ft above the finished sidewalk

Miscellaneous

Marquees within the Design Review Overlay District (DRO) shall be subject to design review by the Development Review Board.

A Marquee erected on a Building that adjoins the intersection of 2 streets may intersect at a 45 degree angle to the corner of the Building.

Marquees shall be cantilevered or supported from above. Columns or Posts extending to the ground are prohibited.

Marquees may be illuminated internally and directly, and may include manual or electronic changeable message. Marquees may include intermittent blinking and flashing lamps and borders.

Any encroachment into or over the public right-of-way must also be approved by the Dept. of Public Works and/or City Council as may be applicable.

714.L.7: Monument Sign

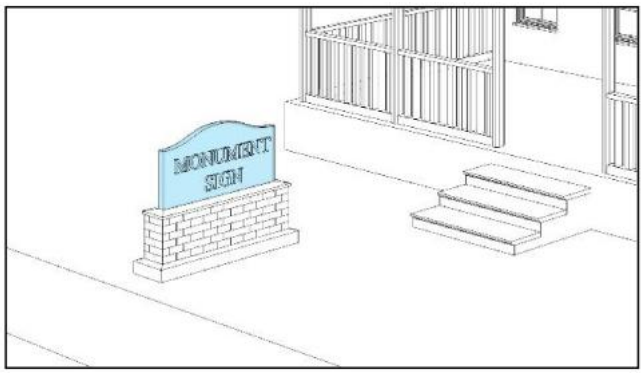

Description

This Sign type consists of 1-2 faces, is placed in a front yard fully detached from a Building, and is supported along the entire length of its base.

Specifications

Quantity	1 per primary street frontage.
Depth (face-to-face) (max)	2.5-ft
Setback (min)	• The lesser of 3-ft from the front properly line or in line with the building façade. • 5-ft from any side properly line.
Area (max)	60 sf (not including supports) or 0.5 sf per linear foot of street facing building frontage whichever is less.
Height, Overall (max)	6-ft from the finished grade

Miscellaneous

No part of a Monument Sign may encroach upon a public right-of-way, clear sight triangle, driveway, parking area, or walkway.

If illuminated, a Monument Sign may only be internally or externally illuminated or backlit.

Monument Signs in a Residential district shall not be illuminated.

A Monument Sign associated with a public or civic use may include manual or electronic changeable message.

714.L.8: Outdoor Display Case

Description

This Sign type has a single face and consists of a metal or wood framed cabinet mounted onto a building façade on a Primary or Secondary Frontage with a transparent window and a lockable opening allowing the contents, such as menus or posters, to be kept current.

Specifications

Quantity	1 per tenant*
Width (max)	3 ft
Height (max)	4 ft
Area (max)	6 ft
Height, Overall (max)	6-ft from the finished grade
Depth/Projection (max)	3 in from the Façade

Miscellaneous

* Cinemas, Performing Arts Centers, and Performing Arts Studios may have up to 4 Outdoor Display Cases per street frontage, each not exceeding 12-sqft in area, not to exceed fifteen (15%) per cent of the area of the Façade associated with the tenant.

Outdoor Display Cases may only be illuminated from inside the display case, and shall not include electronic changeable messages.

714.L.9: Projecting Sign

Description

This Sign type consists of 2 faces on an iconic structural feature of a Building that projects perpendicular from the Façade.

Specifications

Quantity (max)	1 per Primary street Frontage
Width, Sign (max)	4-ft
Height, Sign (max)	10-ft
Depth, Sign (max)	6-in
Offset from Building (min & max)	6-in min and 12-in max from the Façade
Projection (max)	5-ft from the Façade (incl brackets)
Area, Sign (max)	40 sqft
Height, Clear (min)	the greater of the floor level of second Story or 15-ft above finished sidewalk
Height, Overall (max)	the lesser of the floor level of third Story or 35-ft above the finished sidewalk

Miscellaneous

All projecting signs require design review by the Development Review Board. Projecting signs in any district which would project over any public right-of-way shall require approval by the City Council.

The bracket must be an integral part of the Sign design.

A Projecting Sign erected on a building that adjoins the intersection of 2 streets may intersect at a 45 degree angle to the corner of the building.

A Projecting Sign shall be cantilevered or supported from above. Columns or Posts extending to the ground are prohibited.

A Projecting Sign may be illuminated externally, internally, and directly.

Any encroachment into or over the public right-of-way must also be approved by the Dept. of Public Works and/or City Council as may be applicable.

714.L.10: Sandwich Board

Description

This Sign type is a two-sided, portable sign that is constructed in the form of an "A" or similar tent-like shape, or attached to a heavy base in the form of an inverted "T".

Specifications

Quantity (max)	1 per ground floor tenant; and 1 per 4 upper story or below grade tenants.
Area (max)	8 sf
Height (max)	4-ft above the finished grade; 3-ft if placed within a clear sight triangle.
Width (max)	3-ft
Location	• 15-ft max. from the front door of the business. • no closer than 10-ft from a street intersection or crosswalk. • no closer than 12-ft from another Sandwich Board.

Miscellaneous

A Sandwich Board shall not interfere with ingress and egress points and the flow of pedestrian traffic, and a minimum of 5-feet of sidewalk clearance must be maintained at all times.

A Sandwich Board shall only be displayed during business hours, and must be taken indoors when the business is closed.

A Sandwich Board must be freestanding, and shall not be attached to the ground or any other structure or object.

A Sandwich Board shall be constructed of durable, weather resistant materials and finish, and

sufficiently weighted to the ground to prevent blow-down. During high wind events all Sandwich Boards shall be taken indoors.

714.L.11: Wall Sign

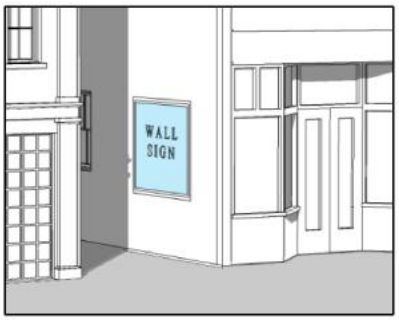

Description

This Sign type has a single face and is attached, painted, or otherwise mounted parallel to a building or structure wall on a Primary or Secondary Frontage or elevation where no street Frontage is available.

Specifications

Height (max)	No higher than the floor level of the second story.
Area (max)	• 2 sf per linear foot of street frontage, or elevation where no street frontage is available, associated with a first floor tenant. • 10 sf for a second floor tenant with only a ground floor entryway. • In no case may the total area of all Wall Signs exceed the lesser of two hundred (200) square feet or fifteen (15%) per cent of the area of the façade or elevation to which they are attached. • Any individual wall sign located fewer than 50 feet from the nearest public road from which the sign is visible, shall not exceed eighty (80) square feet in size. • A Wall Sign in any residential district shall not exceed 6-sf in area.
Depth/ Projection (max)	12-in max. from the façade

Miscellaneous

A Wall Sign may not be applied on or obscure architectural features such as: windows, doors (other than egress-only), pilasters, cornices, window, door or other building trim, feature bands, and other recessed or projecting features.

A Wall Sign may not be painted on walls made of previously unpainted stone or brick.

If illuminated, Wall Signs may be externally illuminated or backlit.

714.L.12: Window Sign

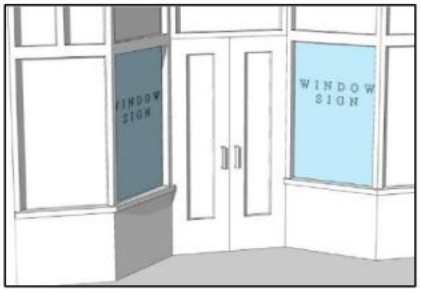

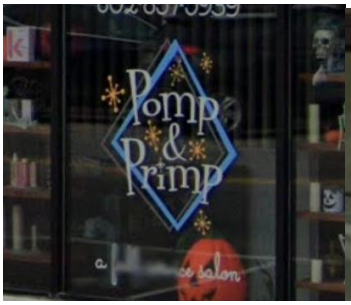

Description

This Sign type has a single face, and is affixed directly onto or behind the glazing of a window and/or door on a Primary or Secondary Frontage, or elevation where no Frontage is available.

Specifications

Quantity (max)	1 per first or second floor window and/or ground floor entry.
Area (max)	• 20% of the area of any individual window located between 4 and 7 feet above the adjacent sidewalk or finished grade. • Total area may not exceed 30% of the total window area of all windows with Signs per façade or elevation. • Window sign may not completely obstruct a single window, unless businesses are obligated to obscure windows according to state or federal regulations.
Height, Lettering (max)	8-inches

Miscellaneous

Non-illuminated window signs do not require a permit, but must comply with the requirements of Section 714.L.12.

Neon window signs shall require approval through a sign permit.

Characters and logos shall be placed directly on the glazing or placed no more than 12” behind the glazing. Items placed more than 12” from the glazing shall not be considered a Window Sign.

Window Signs shall not be illuminated, however the use of neon as part of the Sign design is

permitted. Neon 'Open' signs shall not exceed 3 square feet.

Within the Village Center Zoning District, businesses with less than one hundred and fifty (150 feet of street frontage shall be limited to one (1) internally lit or neon window sign, unless the business is located on a corner lot, in which case it shall be allowed to have two (2) internally lit or neon window signs, one (1) facing each street frontage. A business that has over one hundred and fifty (150) feet of street frontage shall be allowed two (2) internally lit or neon window signs subject to the size restrictions.

Window Signs in any Residential district shall not be illuminated.

Window area calculations shall include only the glazing.

Window Signs shall not interfere with the primary function of windows, which is to enable passersby and public safety personnel to see through windows into premises and view product displays.

M. Location of Sign Types

All Signs shall meet the standards set forth in this Section, and the Sign Types described in this Part in Secs. 714.M.1 through 714.M.3 below.

1. Mixing Multiple Sign Types: Mixing multiple sign types on a single building or site in any combination is permitted unless otherwise limited by the Sign Type or Table 714.M.1 below.
2. Multiple signs on a façade shall be designed and organized in a manner consistent and complementary with the overall architecture of the Building, and employ complimentary materials, colors, design, and scale of letters. The Sign Types permitted in each zoning district shall be as defined in Table 714.M.2 below.

Table 714.M.1

	Awning & Canopy Sign	Band Sign	Blade Sign	Directory Sign	Freestanding Sign	Marquee	Monument Sign	Outdoor Display Case	Projecting Sign	Sandwich Board	Wall Sign	Window Sign
Awning & Canopy Sign		○	○	○	○	●	○	○	○	○	○	○
Band Sign	○		○	○	○	○	○	○	○	○	○	○
Blade Sign	○	○		○	○	●	●	○	●	○	○	○
Directory Sign	○	○	○		○	○	○	○	○	○	○	○
Freestanding Sign	○	○	○	○		●	●	○	●	○	○	○
Marquee	●	○	●	○	●		●	○	●	○	○	○
Monument Sign	○	○	●	○	●	●		○	●	○	○	○
Outdoor Display Case	○	○	○	○	○	○	○		○	○	○	○
Projecting Sign	○	○	●	○	●	●	●	○		○	○	○
Sandwich Board	○	○	○	○	○	○	○	○	○		○	○
Wall Sign	○	○	○	○	○	○	○	○	○	○		○
Window Sign	○	○	○	○	○	○	○	○	○	○	○	

○ - Sign Types are permitted on the same frontage or elevation.
● - Sign Types are **not** permitted on the same frontage or elevation.

Table 714.M.2	Sign Types Permitted by Zoning District								
Sign Type	Residential 1	Residential 2	Multi-Family Residental 1	Multi-Family Residental 2	Multi-Family Residental 3	Multi-Family/ Mixed Use 1	Multi-Family/ Mixed Use 2	Village Center	Sign Type Standards
Awning & Canopy Sign	●	●	●	●	●	●	●	○	714.L.1
Band Sign	●	●	●	●	●	●	●	○	714.L.2
Blade Sign	●	●	○	○	○	○	○	○	714L.3
Directory Sign	●	●	○	○	○	○	○	○	714.L.4
Freestanding Sign	●	●	○	○	○	○	○	○	714.L.5
Marquee	●	●	●	●	●	●	●	○	714.L.6
Monument Sign	●	●	○	○	○	○	○	●	714.L.7
Outdoor Display Case	●	●	○	○	○	○	○	○	714.L.8
Projecting Sign	●	●	○	○	○	○	○	○	714.L.9
Sandwich Board	●	●	○	○	○	○	○	○	714.L.10
Wall Sign	●	●	○	○	○	○	○	○	714.L.11
Window Sign	●	●	○	○	○	○	○	○	714.L.12
○ - Sign Type is permitted					● - Sign Type is **not** permitted				

Table 714.M.2 Continued	Sign Types Permitted by Zoning District								
Sign Type	Transit Oriented Development	Residential-Office	Light Industrial	Planned Exposition	Planned Exposition	Planned Agriculture	Open Space	Floodplain	Sign Type Standards
Awning & Canopy Sign	○	○	●	○	●	●	●	●	714.L.1
Band Sign	○	○	●	○	●	●	●	●	714.L.2
Blade Sign	○	○	●	○	●	●	●	●	714L.3
Directory Sign	○	○	○	○	○	●	●	●	714.L.4
Freestanding Sign	○	○	○	○	○	○	○	○	714.L.5
Marquee	○	●	●	○	○	●	●	●	714.L.6
Monument Sign	●	○	●	○	●	○	○	○	714.L.7
Outdoor Display Case	○	○	○	○	○	●	●	●	714.L.8
Projecting Sign	○	○	○	○	○	●	●	●	714.L.9
Sandwich Board	○	○	○	○	○	●	●	●	714.L.10
Wall Sign	○	○	○	○	○	●	●	●	714.L.11
Window Sign	○	○	○	○	○	●	●	●	714.L.12
○ - Sign Type is permitted					● - Sign Type is **not** permitted				

N. Subdivision, Multi-Family, and School Entrance Signs.
At any entrance to a residential subdivision, multi-family development or school, there may be not more than two free-standing or wall signs identifying the entrance. A single side of any such sign may not exceed ten (10) square feet.

O. Maintenance of Signs
1. All signs and all components thereof, including but not limited to, supports, braces, and anchors, shall be kept in a state of good repair. With respect to freestanding signs, components (supporting structures, backs, etc.) not bearing a message shall be constructed of materials that blend with the natural environment or shall be painted or stained with a neutral color to blend with the natural environment.
2. Staff is authorized to order the repair or removal of any sign which in the judgment of the Staff is dangerous, or which is erected or maintained contrary to this Code.

P. Unlawful Cutting of Trees or Shrubs

No person may damage, trim, destroy or remove any trees, shrubs or other vegetation for the purpose of increasing or enhancing the visibility of any sign in any of the following locations:

1. Within any public right-of-way, unless the work is done pursuant to the expressed written authorization of the City or other Agency having jurisdiction over the streets.
2. On property that is not under the ownership or control of the person responsible for such work unless the work is authorized by the owner.
3. In any area where such trees or shrubs are required to remain under a permit issued by the City or any other Agency having jurisdiction to issue such permits.

SECTION 715: TELECOMMUNICATIONS

A. Balloon Test

The Development Review Board may require the applicant to fly a four (4) foot diameter brightly colored balloon at the location and maximum elevation of any proposed tower. If a balloon test is required, the applicant shall advertise the date, time, and location of this balloon test at least seven (7) days in advance of the test in a newspaper with a general circulation in the City. The applicant shall also inform the Development Review Board, in writing, of the date, time and location of the test, at least fifteen (15) days in advance of the test.

1. The balloon shall be flown for at least eight (8) consecutive daylight hours on two (2) days. If visibility and weather conditions are inadequate for observers to be able to clearly see the balloon test, further tests may be required by the Development Review Board.

B. Criteria For Approval and Conditions

An application for a Wireless Telecommunication Facility permit shall be approved after a hearing when the Development Review Board finds all the following criteria have been met:

1. The Facility will not be built on speculation. If the applicant is not a Wireless Telecommunication Service Provider, the Development Review Board may require the applicant to provide a copy of a contract or letter of intent showing that a Wireless Telecommunication Service Provider is legally obligated to locate a Wireless Telecommunication Facility on lands owned or leased by the applicant.
2. The Facility will not project more than twenty (20) feet above the average elevation of the tree line measured within fifty (50) feet of the highest vertical element of the Wireless Telecommunication Facility, unless the proposed elevation is reasonably necessary to provide adequate Wireless Telecommunication Service capacity or coverage or to facilitate collocation of facilities.
3. The minimum distance from the base of any tower to any property line is not less than one hundred (100) percent of the total elevation of the tower, including antenna or equipment.
4. The Facility will not be illuminated by artificial means and will not display any

lights or signs except for such lights and signs as required by Federal Aviation Administration, federal or state law, or this Code.

5. The applicant will remove the Facility, should the Facility be abandoned or cease to operate. The Development Review Board may require the applicant to provide a bond, or other form of financial guarantee acceptable to the Development Review Board to cover the cost of removal of the Facility, should the Facility be abandoned or cease to operate.

6. The applicant demonstrates that the facility will be in compliance with all Federal Communications Commission (FCC) standards and requirements regarding radio frequency radiation.

7. The applicant will maintain adequate insurance on the Facility.

8. The Facility will be properly identified with appropriate warnings indicating the presence of radio frequency radiation. The Development Review Board may condition a permit on the provision of appropriate fencing.

9. The proposed equipment cannot be reasonably collocated at an existing Wireless Telecommunication Facility. In determining whether the proposed equipment cannot be reasonably collocated at an existing facility, the Development Review Board shall consider the following factors:

(a) The proposed equipment would exceed the structural or spatial capacity of the existing facility, and the existing facility cannot be reinforced, modified or replaced to accommodate planned equipment at a reasonable cost.

(b) The proposed equipment would materially impact the usefulness of other equipment at the existing facility and such an impact cannot be mitigated or prevented at a reasonable cost.

(c) The proposed equipment, alone or together with existing equipment, would create radio frequency interference and/or radio frequency radiation in violation of federal standards.

(d) Existing towers and structures cannot accommodate the proposed equipment at an elevation necessary to function reasonably or are too far from the area of needed coverage to function adequately.

(e) Collocation of the equipment upon an existing tower would cause an undue aesthetic impact.

10. The Facility provides reasonable opportunity for collocation of other equipment.

11. The Facility will not unreasonably interfere with the view from any public park, natural scenic vista, historic building or district, or major view corridor.

12. The Facility will not have an undue adverse aesthetic impact. In determining whether a facility has an undue adverse aesthetic impact, the Development Review Board shall consider the following factors:

(a) The results of the balloon test, if conducted.

(b) The extent to which the proposed towers and equipment have been designed to blend into the surrounding environment through the use of screening, camouflage, architectural design, and/or imitation of natural features.

(c) The extent to which access roads have been designed to follow the contour of the land and will be constructed within forest or forest fringe areas and not

open fields.

(d) The duration and frequency with which the Facility will be viewed on a public highway or from public property.

(e) The degree to which the Facility will be screened by existing vegetation, topography, or existing structures.

(f) Background features in the line of sight to the Facility that obscure or make the Facility more conspicuous.

(g) The distance of the Facility from the point of view and the proportion of the facility that is above the skyline.

(h) The sensitivity or unique value of a particular view affected by the Facility.

(i) Any significant disruption of a viewshed that provides context to an important historic or scenic resource.

13. The Facility will not destroy or significantly imperil necessary wildlife habitat or that all reasonable means of minimizing the destruction or imperilment of such habitat or species will be utilized.

14. The Facility will not generate undue sound.

C. Continuing Obligations For Wireless Telecommunication Facilities

The owner of a Wireless Telecommunication Facility shall, at such times as requested by the Development Review Board, file a certificate showing that it is in compliance with all FCC standards and requirements regarding radio frequency radiation, and that adequate insurance has been obtained for the Facility. Failure to file a certificate within the timeframe requested by the Development Review Board, shall mean that the Facility has been abandoned.

D. Removal of Abandoned or Unused Facilities

Unless otherwise approved by the Development Review Board, an abandoned or unused Wireless Telecommunication Facility shall be removed within ninety (90) days of abandonment or cessation of use. If the Facility is not removed within ninety (90) days of abandonment or cessation of use, the Development Review Board may cause the Facility to be removed. The costs of removal shall be assessed against the Facility owner. Unused portions of a Wireless Telecommunication Facility shall be removed within one hundred and eighty (180) days of the time that such portion is no longer used. Replacement of portions of a Facility previously removed shall require a new permit, pursuant to Section 502.N.5-6.

SECTION 716: FIRE ACCESS

A. Purpose

To mitigate risk to life and property by providing adequate access for fire trucks or through the use of fire suppression systems.

B. General Standards

1. For all development applications requiring site plan review under Section 502.F

and for all residential development activities involving two or more principal buildings on a single lot, fire access shall be reviewed by the Essex Junction Fire Chief or their designee.

2. For residential uses, each principal building must be accessible by fire apparatus through a road, driveway or other unobstructed gravel or hard surface. For lots with four or fewer residential units, this requirement may be waived by the Fire Chief or designee if

(a) An adequate fire sprinkler system is installed within each principal residential building that is not directly accessible by fire apparatus, or

(b) The principal residential building not directly accessible by fire apparatus is determined by the fire chief not to present significant danger to its occupants or its surrounding structures due to its limited size, internal layout or location relative to nearby structures.

3. The provisions of this section shall not in any way impair or remove the necessity of compliance with the Vermont Fire and Building Safety Code; or any other applicable local, state, or federal laws or regulations.

SECTION 717: DAY CARE AND FAMILY CARE FACILITIES

A. Purpose

To allow for the provision of Day Care and Family Care Facilities within all Districts and to provide criteria for the review of such facilities.

B. General Standards:

1. Parking. Parking for Day Care and Family Care Facilities shall meet the following standards:

(a) Appropriate parking and unloading areas shall be provided for all facilities.

(b) The amount of parking and unloading areas to be provided shall be based on the number of clients served at any one time and the number of shifts to be provided.

(c) The location of parking and unloading areas shall be considered relative to the structure, its entrances, and the location of adjoining streets.

(d) The impact of required parking facilities upon adjoining properties and neighborhood characteristics shall also be considered.

2. Operators of the Day Care or Family Care Facility shall submit a parking and circulation plan which shall include:

(a) A general layout of the lot, including the location of existing structures, driveways, and abutting streets and alleys.

(b) The location of proposed parking and unloading areas.

C. Day Care Facility Standards:

1. Play space of not less than thirty-five (35) square feet per child shall be provided. Play space shall not include floor space used for permanent and stationary equipment, storage, halls, bathrooms, offices and kitchens.

2. A fenced-in play area of not less than fifty (50) square feet per child shall be provided; said space shall not be located closer than twenty-five (25) feet to any public or private street and shall be fenced to a minimum height of forty-eight (48) inches.
3. A fenced outdoor play area shall not be required if a child care center exclusively provides preschool instruction for not more than three (3) hours per day, and children are not permitted to play outside.
4. Day care facilities shall not be located above the first story of the structure unless safety codes are met. Basements shall not be used for child care unless all usable rooms have fire escapes and rescue windows or doors, which meet all Vermont Fire Protection Codes.

D. Standards of Review

The Administrator Officer or Development Review Board shall review all applications for Family and Day Care Facilities as Site Plans. In addition, review shall include the following:

1. Proximity to major streets.
2. Proximity to schools, recreation facilities, sidewalks and bicycle paths.
3. Traffic to be generated by the facility.
4. Proposed hours of operation of the facility.
5. Maximum number of children to be served by the facility.
6. Potential impact of the proposed facility upon the surrounding neighborhood.
7. Existing or potential levels of air and sound pollution in the area.
8. Access to adjacent areas of commercial or industrial employment.
9. Type of vehicular traffic common to the area.

E. Administrator Officer or Development Review Board Actions

The Administrator Officer or Development Review Board may deny, approve, or approve with conditions based upon applicable review criteria.

F. Exemptions

Day Care Homes and Family Care Homes as defined in this Code are exempt from the provisions of this Section.

SECTION 718: PERFORMANCE STANDARDS

A. Purpose/Applicability

These performance standards are established to protect the public health, safety and general welfare. No land or building shall be used or occupied in any manner, which creates dangerous, injurious, noxious or otherwise objectionable conditions. The City may retain a qualified consultant at the expense of the applicant or owner to review any application for conformance to any of these standards. Any use authorized by this Code shall meet performance standards as specified herein. No use may be established or structure constructed which violates these performance standards without specific approval of the Development Review Board or City Council as authorized herein.

B. Sound

It shall be a violation of this Code for any property owner or occupant to create, or allow to be created, sound in excess of the following stated limits:

1. At any point where the property on which the sound emanates adjoins any property used for residential purposes sound shall not exceed the following levels of intensity:

TIME PERIOD	One hour Average dba	Instantaneous Maximum dba
12:00 Midnight to 1:00 AM	55	65
1:00 AM to 7:00 AM	50	60
7:00 AM to 12:00 Midnight	70	80
9:00 PM to 12:00 Midnight preceding official Essex Junction school days	60	70

2. At any point where the property on which the sound emanates adjoins any property used for commercial uses:

TIME PERIOD	One hour Average dba	Instantaneous Maximum dba
12:00 Midnight to 1:00 AM	70	80
1:00 AM to 7:00 AM	60	70
7:00 AM to 12:00 Midnight	80	90

3. At any point where the property on which the sound emanates adjoins any property used for industrial purposes:

TIME PERIOD	One hour Average dba	Instantaneous Maximum dba
12:00 Midnight to 1:00 AM	70	80
1:00 AM to 7:00 AM	60	70
7:00 AM to 12:00 Midnight	85	95

4. For purposes of this regulation, the following terms shall be defined as stated

below.

(a) Decibel - a unit measure of sound level;

(b) Sound level - in decibels measured by a sound level meter, using "A" frequency weighting (expressed in DBA)

(c) Average sound level - a sound level during a given period of time (e.g., one hour) found by the general rule of combination of sound levels. Also called equivalent sound level.

5. Exemptions. Sounds associated with standard agricultural operations shall be exempt from this standard.

C. Odor

No use shall be located or operated which involves the emission of odorous matter which is detectable beyond the property line of the lot on which the odor is generated.

1. The odor threshold established herein shall be determined by observation at the property line.

2. Where the operator or owner disagrees with the determination that a violation exists, the City shall cause the odor to be measured by the methods and procedures established by the American Society for Testing materials. The owner, or operator, shall be responsible for all costs associated with the required testing.

3. Odors emanating from standard agricultural operations, municipal wastewater and pump stations are exempt.

D. Explosives

No use or structure shall be established which involves the storage or sale of explosives as a principal use. Explosive materials which are incidental to any construction activity are exempt from this requirement provided, however, that provisions are made for handling and storing such materials that meet or exceed all applicable Federal and State regulations.

E. Smoke and Particulate Matter

No use shall be established or operated which emits smoke or particulate matter beyond the property line. The smoke and particulate matter threshold shall be determined by observation at the property line.

1. Any application for development approval which may cause the emission of smoke or particulate matter shall produce evidence that the emissions will not exceed applicable Federal or State emission standards.

2. When the City asserts that a violation exists and the owner or operator disagrees the City shall cause the smoke or particulate matter to be measured by an expert at the expense of the owner or operator.

3. The owner or operator of any source of particulate matter shall use best available control technology to minimize emissions. All construction or land-clearing activities shall use best available control technology to minimize emissions.

4. Techniques used to minimize particulate emissions shall include, but are not limited to, application of dust suppressants, watering of construction sites, control of speed on unpaved drives or parking areas and the installation of pollution control

devices at any emission point source.

5. Wood stoves or fireplaces are exempt from this standard.

F. Hazardous materials

Hazardous materials as defined in applicable State and Federal regulations shall not be used, stored, or transported contrary to these regulations. Review and regulations regarding the classification of hazardous materials shall be the responsibility of applicable State and/or Federal agencies. Inspection of sites which involve the use of hazardous materials shall be the responsibility of applicable Federal and/or State agencies. The Development Review Board may place conditions on any application as recommended by an outside expert hired by the City. Furthermore, any location which stores or uses hazardous materials shall notify the Fire Department regarding the location and type of said hazardous materials on the site.

G. Visual Impact

The Development Review Board may review the visual impact of any proposed development located in any Commercial or Industrial District. The Development Review Board may place conditions on any approval or may require the alteration or relocation of any proposed structure which in its opinion would significantly alter the existing character of the area.

1. Factors for Evaluation. Visual impact shall be evaluated through analysis of the following factors and characteristics:

(a) Conformance to all regulations and standards as specified herein.

(b) Selection and appropriate use of materials.

(c) Harmony and compatibility of architectural character with surrounding structures.

(d) Exterior space utilization in regard to efficient use of site and existing significant natural or man-made features.

(e) Circulation - vehicular and pedestrian.

(f) Height, size and bulk of proposed and adjoining buildings.

(g) Creativity.

Nothing in this section shall be deemed to require a specific design or architectural treatment. Evaluation of a proposal shall be based upon the specific proposal at a specific site.

2. Relationship of Buildings to Site:

(a) The site should be designed to provide an appropriate and safe transition from the street to the building. Consideration shall be given to safe pedestrian movements, use of planting materials and placement of parking areas to provide a transition.

(b) Consideration shall be given to screening parking areas from view from public ways through the use of design elements such as decorative screening, building wall extensions, berms and landscaping materials.

c) The height and scale of each building shall be compatible with the site and existing adjoining buildings:

3. Relationship of buildings and site to adjoining area.
(a) Adjacent buildings of different architectural styles shall be considered. To the extent possible, compatibility shall be ensured through the use of screens, sight breaks and materials. Consideration shall be given to the height, bulk and scale of the proposed structure in comparison to existing adjoining buildings.
(b) General architectural features including basic building and roof forms, treatment of cornices and windows, treatment of major entrances, placement of doors, fenestration patterns, and use of colors shall be reviewed for compatibility with adjoining buildings.
4. Landscape and Site Treatment:
(a) Where unique natural or significant man made features exist, effort should be made to preserve these features.
(b) Landscape treatment shall enhance architectural features and vistas.
(c) Landscaping and grading shall direct and encourage safe pedestrian, bicycle and vehicular access.
(d) Screening of service yards, dumpsters, and utilities shall be accomplished through the use of walls, fencing, plantings or courtyards.
(e) Exterior lighting shall be designed and installed to enhance the building design and to minimize negative impact on adjacent buildings or properties.
5. Building Design:
(a) Evaluation of the appearance of a project shall be based upon the quality of design and relationship to its surroundings. Generally, the following standards shall be considered:
(i) Architectural harmony of the building with adjoining buildings.
(ii) Materials shall be of durable quality and shall be architecturally harmonious. Consideration shall be given to the use of materials which are suitable for the proposed use of the building.
(iii) Building components, such as doors, windows, eaves and parapets, shall have good proportions and relationships to each other.
(iv) Colors shall be harmonious to the site and adjoining buildings.
(v) Lighting fixtures shall be part of the architectural concept and shall be compatible with surrounding buildings and materials.
(vi) Variation and creativity of detail, form and siting shall be considered to provide visual interest.
(vii) Scale of the proposed buildings, including number of stories, bulk, height, site location and lot coverage shall be considered to determine compatibility with adjoining buildings.

H. Gas Transmission Lines and Facilities
Every gas transmission and distribution piping system shall be constructed, operated, and maintained in compliance with current Federal and State rules and regulations. Every gas appliance and gas piping system shall be constructed, operated and maintained in compliance with the provisions of the "American Standards for the Installation of Gas Appliances and Gas Piping." Any construction, placement, or alteration of any facilities

within the public right-of-way shall be reviewed and approved as specified herein.

SECTION 719: LANDSCAPE AND TREE PLANTING REQUIREMENTS

A. Purpose and Intent

To protect and enhance the community's environmental, water, economic and aesthetic quality, thereby contributing to the overall objective of promoting public health, safety, and welfare. More specifically, it is the purpose of this Section to:

1. Reduce sound, glare, and heat.
2. Protect, preserve and improve property values.
3. Reduce conflicts between adjoining land uses and incompatible activities.
4. Promote energy conservation through the use of vegetation.
5. Protect the environment by contributing to air purification, oxygen regeneration, ground water recharge and use of green stormwater practices.
6. Enhance community appearance, identity and unique natural beauty.
7. Create an inviting pedestrian friendly streetscape.
8. Preserve and protect existing mature tree growth.
9. Channelize vehicular and pedestrian movement within off-street parking areas.
10. Delineate parking areas and adjacent right-of-way.
11. Delineate ingress and egress points.

B. Low Impact Design approaches and Green Stormwater Best Management Practices

To promote and provide incentives for use of LID/GSI practices (i.e. bioretention areas, vegetated swales, planter boxes, rainwater harvesting systems, and other vegetated practices), these practices may be used to meet landscaping, parking lot landscaping, buffering, streetscape, and tree preservation requirements of this section. These practices may be constructed in the designated landscape, buffering, streetscape and tree preservation area if they are part of an approved stormwater management plan for the site; and if they are reviewed favorably by the Tree Advisory Committee and/or the Essex Junction Tree Warden.

C. Tree Protection

Any application for development approval by the Development Review Board shall submit a plan, which indicates the location of existing mature trees, or tree groupings, and shall indicate on the plan those trees or tree groupings which are proposed to be saved. This plan shall be developed by a consulting arborist or landscape architect. The Development Review Board may grant a credit of up to fifty (50) percent of the required landscaping for the preservation of mature trees. If removal of trees or shrubs in the City right of way is necessary for the proposed development, replacement trees equal to or better than shall be planted in coordination with and approval from the City Tree Advisory Committee.

D. Shade Trees

The developer or applicant for any development approval under this Code shall plant one (1) shade tree for each forty (40) feet of frontage along a right-of-way bordering the

property, unless modifications are needed due to existing utilities or other safety factors. The species shall be approved by the Development Review Board or Administrative Officer in coordination with the City Tree Advisory Committee.

1. Existing single family and two family lots are exempt from this provision.
2. Street trees shall be planted either within the right-of-way or along the frontage of the lot, as determined by the Development Review Board or Administrative Officer in coordination with the City Tree Advisory Committee.
3. The Development Review Board or Administrative Officer may waive this requirement if substantial efforts are proposed for preserving existing mature trees along the right-of-way. In this circumstance, a tree protection plan for these mature trees must be submitted.
4. This provision shall not apply to applications for the expansion of existing commercial or industrial facilities if the expansion amounts to five hundred (500) square feet or less of enclosed floor space.
5. Any disturbance of existing landscape must be replaced or substituted with comparable landscaping in an appropriate location.

E. Landscaping

There shall be a sufficient amount of landscaping and screening, as may be reasonably determined by the Development Review Board, to ensure protection of and enhance the quality of the project in question and adjacent properties. The landscape plan must be drawn by a landscape architect, landscape designer, or competent landscape professional, and the landscaping requirement will be a minimum of three (3) percent of the total construction cost for new construction up to $250,000. For new construction projects above $250,000, the landscape requirement shall be a minimum of two (2) percent of the total construction cost. In the case of construction projects above $1,000,000, a landscape architect, licensed by the State of Vermont's Office of Professional Regulation, will be required to prepare a landscape plan. This may be waived in unusual circumstances. The Development Review Board may permit or require improvements to the public right-of-way in part or in lieu of on-site landscaping to be used to improve the pedestrian environment including street trees, plantings, stormwater retention and pedestrian amenities. With a new use on existing development or renovation on existing property, the applicant must provide landscaping adequate to provide screening and environmental enhancement to the satisfaction of the Development Review Board. The Development Review Board may modify the planting requirements to more fully implement the purpose and intent of this section.

1. Landscape Plan:
   (a) Preliminary Site Plan
      (i) A general concept of the landscaping and GSI/LID (if applicable), in both written and graphic form.
      (ii) A list of existing vegetation, with the location, type, and size of existing trees of six (6) inches or greater in caliper.
      (iii) A written plan to preserve and protect significant existing vegetation

during and after construction. Such plan will be sufficient detail that the City of Essex Junction will be able to inspect the site during construction to ensure that the existing vegetation is protected as per plan.

(iv) The location of existing natural features, such as streams, wetlands, and rock outcroppings.

(b) Final Landscape Plan

(i) All proposed physical improvements, such as buildings, walls, parking areas sidewalks, etc.

(ii) Proposed landscaping materials, including vegetation to remain, types of new plant materials, identified by common name and botanical name, sizes of all new plant materials by height and/or diameter at time of planting and at maturity, quantities of each of the planting materials, and treatment of the ground surface (paving, seeding, or groundcover).

(iii) Methods of controlling erosion and protecting landscaped areas.

(iv) A landscape phasing plan. Construction phasing shall be shown on the landscape plan with landscape and construction activities correlated.

2. Landscaping Requirements:

(a) All required landscaping shall comply with the intent and purpose of these regulations.

(b) If at the time of final inspection, all the requirements of these regulations have not been completed in a satisfactory manner, a certificate of occupancy shall not be issued unless the applicant has provided a monetary security guarantee. All required landscaping shall be installed as per plans submitted.

3. Applicability - New and Existing Developed Areas

(a) The Development Review Board shall require review of proposed landscaping.

(b) New Development or Redevelopment: All new development, construction or reconstruction shall be in full compliance with the provisions of these regulations.

c) Existing Developed Areas. Compliance required: All property with existing development which is not in compliance with the provisions of this Section shall be considered non-conforming and allowed to continue until such time as application is made to add, enlarge or reconstruct a structure on the property. At that time a plan showing existing and new development and the proposed landscaping plan shall be submitted. The Development Review Board will consider the existing development, proposed change or alteration, and the impact of the proposed use on the site, parking and circulation. Nothing in this Section shall prevent the Development Review Board from requiring landscaping for the proposed area designated for change.

4. General Requirements

(a) Planting Materials and Specifications: All plant materials shall be in accordance with the American Standards for Nursery Stock (ANSI Z60.1) or latest version. All installations shall follow the acceptable horticultural practices as described in the most current ANSI A300 Planting and Transplanting Standards.

(b) Maintenance: All planting shown on an approved site plan shall be maintained by the property owner in a vigorous growing condition throughout the duration of the use. Plants not so maintained shall be replaced with new plants at the beginning of the next growing season. Trees with a caliper of less than five (5) inches may be replaced on an inch-by-inch basis with trees of at least two and a half (2.5) inches caliper preferably of the same genus. Replacement of trees greater than 5 inches in caliper shall be done in consultation with the City Tree Warden.

(c) Failure to maintain: Failure to replace materials per approved plans shall be a violation of this Code.

5. Design Standards:

(a) Required parking areas must be shaded by deciduous trees (either retained or planted by the developer) that have or will have when fully mature a trunk of at least twelve (12) inches in diameter. Each tree shall be presumed to shade a circular area having a radius of fifteen (15) feet with the trunk of the tree as the center and there must be sufficient trees so that using this standard, twenty (20) percent of the parking area will be shaded. The twenty (20) percent parking lot shade coverage may be waived by the Development Review Board in unusual circumstances, such as existing lots or lots which are not visible from off-site or if the shade requirements can't be met in conjunction with the incorporated LID/GSI practices.

(b) Trees used in parking lots should be placed far enough back from the curb to accommodate the overhang of an automobile.

(c) The parking lot should be screened with shrubs or other barriers to the extent possible.

(d) When planters are used in parking lot interiors, a surface area should be made available for aeration and water infiltration of at least twenty-five (25) square feet per tree. Islands may be graded and planted to serve as collection and treatment areas for stormwater management practices including LID/GSI. It is recommended that sections of curb cut be no more than five (5) feet in length.

(e) If possible, the parking lot should be located to the rear or side of the building with landscaping to the front of the structure.

(f) Fruit bearing trees should be avoided where vehicular and pedestrian traffic exists.

(g) Curbs or other physical barriers should be installed around plant material located within the parking lot unless curbs or other physical barriers prohibit proper functioning of LID/GSI stormwater treatment practices.

(h) When trees are planted to provide shade on the pavement, they should be located to the south of the pavement to maximize available shade.

(i) To the extent possible, trees should be located so that at mature height spread they will not interfere with overhead power lines.

(j) Evergreen trees should be avoided in areas where the mature trees will create hazardous interruption of views to oncoming traffic, or where they will create hazardous snow drifting on the parking area or public right-of-way.

(k) Vegetative areas should be planted with species normally found in the area.
(l) The City of Essex Junction may require additional design to enhance and sustain tree growth, such as the use of Silva cells, engineered soils, or an expansion of the proposed planting area.

6. The Development Review Board shall require compliance with any Tree Ordinance or Landscape Design Standards enacted by the City of Essex Junction, subsequent to the effective date of these regulations.

7. Landscape plans for all development applications must be reviewed by the Tree Advisory Committee and/or the City of Essex Junction Tree Warden. Comments from the Tree Advisory Committee and/or the City of Essex Junction Tree Warden shall be considered by the Development Review Board.

8. Example Schematics:

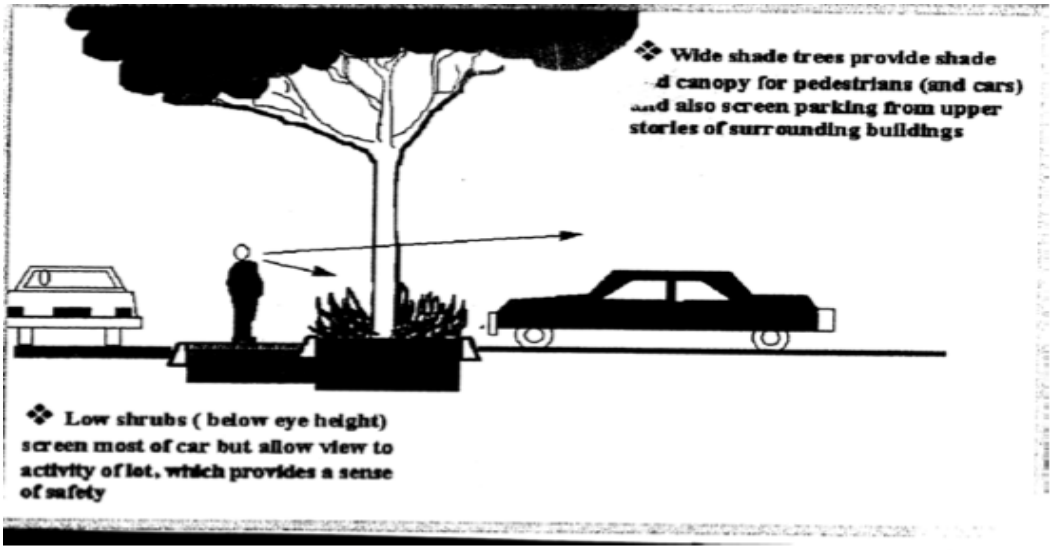

From Landscape Guide for Vermont Roadways & Transportation Facilities

Figure 4: Parking Area Landscaping/Screening

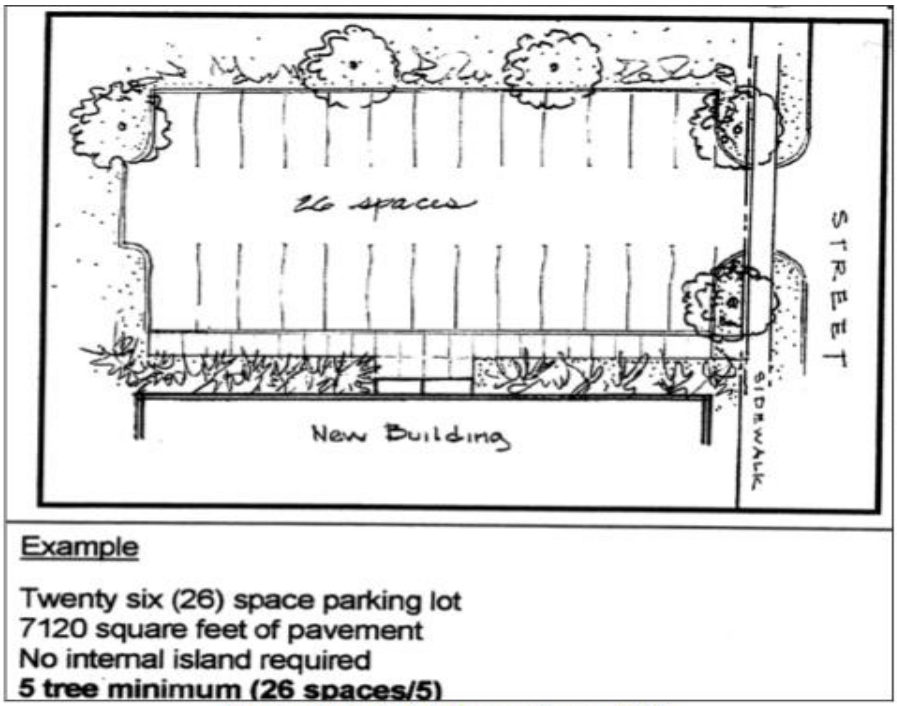

Illustration by Kathleen Ryan, ASLA

Figure 5: Perimeter Landscaping for Parking Areas

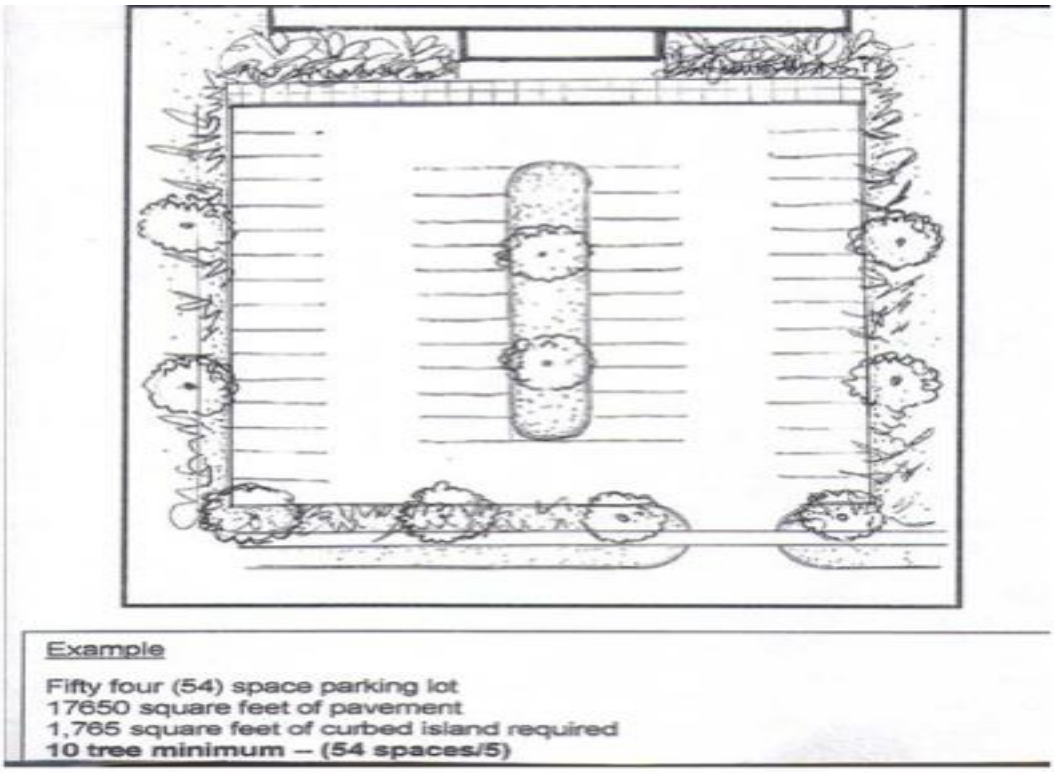

Illustration by Kathleen Ryan, ASLA

Figure 6: Internal and Perimeter Landscaping for Parking Areas

F. Approved Plant Materials

An emphasis shall be placed on selecting species hardy to Vermont and the Champlain Valley. Trees and plantings that are close to driveways, sidewalks and roads shall be salt

tolerant. Generally, plants shall be from the most current tree species list recommended by the Vermont Urban Community and Forestry Program. The Development Review Board may refer to any or all of the following publications as resources:

1. Vermont Tree Selection Guide from the Vermont Urban and Community Forestry Program: https://vtcommunityforestry.org/sites/default/files/pictures/complete_vt_tree_selection_guide_2022.pdf.
2. Planting Sustainable Landscapes- A Guide for Plan Reviewers, prepared by Department of Forests and Parks and the Vermont Chapter of the American Society of Landscape Architects- Section-111.
3. Street Tree Fact Sheets- Published by the Municipal Tree Restoration Program with support from the USDA Forest Service, Northeastern Area State and Private Forestry.

G. Performance Bond

The applicant shall provide a suitable performance bond or other form of security to guarantee the performance and completion of all planting required by this Section, which bond or security shall also guarantee all plantings for a period of two (2) years. Following this time period, the plantings are still required to be maintained in accordance with Section E.4.b.

SECTION 720: LOT FRONTAGE

A. Lot Frontage

Within any District, a minimum frontage of sixty (60) feet is required at the street, unless specifically stated otherwise. The Development Review Board may waive this requirement in unusual circumstances, including but not limited to small lots and preexisting, non-conforming lots.

B. Required Frontage

In accordance with Section 4406 of Vermont Municipal Planning and Development Act (24 VSA, Chapter 117), no development shall be permitted on any lot which does not have either frontage on a public road or public waters or, without approval of the Development Review Board, access to such road or waters by a permanent easement or right-of-way at least twenty (20) feet in width.

SECTION 721: ACCESSORY APARTMENTS

A. Purpose

To allow the provision of small apartments within or appurtenant to an existing single family dwellings to improve the ability of households to provide housing.

B. Standards.

1. Thirty (30) percent of the existing residential floor space, or 900 square feet,

whichever is greater, may be converted, added on to the principal structure or built in a detached accessory structure to accommodate an accessory apartment.

2. No more than one accessory apartment may be allowed on any single family lot.

3. The converted dwelling shall retain the appearance of a single family dwelling.

4. An accessory apartment shall not be allowed in a residential garage, unless there is adequate separation between the residential unit and garage and is compliant with the Vermont Fire Prevention Code.

5. The parking area shall be appropriately landscaped or screened to retain the appearance of a single family dwelling.

6. An accessory apartment may be approved within an existing unattached structure or a new unattached structure which is located on the same lot, if the following conditions are met:

(a) All other provisions of this Section are met.

(b) Additional driveways or parking areas shall not be constructed on the lot except adjacent to the existing driveway or parking area.

(c) If an existing unattached structure is utilized as an accessory apartment, the single family dwelling shall not be eligible for an additional accessory apartment.

(d) New unattached accessory structures shall be a maximum of 1.5 stories.

7. Either the single family residence or the accessory apartment must be owner occupied. All permits shall be voided if this occupancy requirement is not adhered to.

SECTION 722: PROFESSIONAL OFFICE OVERLAY DISTRICT

A. Purpose

A Professional Office Development Overlay District is to allow for the development of office buildings within areas of existing offices, and as designated on the Future Land Use Map in the Comprehensive Plan.

B. Approval Process

All proposed professional office developments shall require a hearing before the Development Review Board. The Development Review Board shall consider the following criteria and may establish conditions as deemed necessary to meet the purposes of this Section.

1. Compatibility with surrounding office uses.

2. Hours of operation.

3. The proposed use will not interfere with or alter the residential uses of adjoining properties.

4. Permitted Uses. Specific uses shall be determined by the Development Review Board upon review of an application and finding that the proposal meets all the criteria of this Section. However, retail and industrial uses shall not be allowed. Residential uses shall be allowed as a Conditional Use. The residential density shall not exceed ten (10) units per acre.

C. Conditions

The Development Review Board may establish conditions as deemed necessary to mitigate impacts of a proposed professional office development.

D. Site Plan

In addition to the Site Plan Standards specified in this Code, the Development Review Board shall review the following:

1. Lighting shall not negatively impact adjoining residential properties, and the use of flood lighting is expressly prohibited.
2. Parking areas shall be screened from view from adjoining residential properties.
3. All structures shall be designed to be compatible in construction with adjoining structures.
4. Proposed signs shall be specifically approved.

SECTION 723: PLANNED UNIT DEVELOPMENT (PUD)

The objective of the Planned Unit Development (PUD) is to permit flexibility in the application of land development regulations to encourage compact, pedestrian-oriented development and redevelopment, and to implement the policies of the municipal plan, such as the provision of affordable housing. If flexibility is needed to achieve these objectives, the City may approve waivers in accordance with 723.B. In this way the City may grant the developer a desirable flexibility and at the same time not only protect, but enhance the welfare of the residents and other users of a development as well as the rest of the community. Planned Unit Developments may be used to facilitate development of areas designated for residential, mixed, or single use to achieve the objective stated herein.

A. Planned Unit Development

The Development Review Board may review any subdivision under Section 503 as a Planned Unit Development under this Section.

1. Application Requirements. Submittal of a Planned Unit Development application shall be in conformance with the submittal standards of Section 511, Planned Developments.
2. Density. A Planned Unit Development shall meet the density requirements of the Residential District in which it is located. The Development Review Board may grant density bonuses not to exceed one-hundred (100) percent in the R1 District and up to twenty-five (25) percent in the R2 District of the gross density as permitted in the District. Bonuses may be earned by the following schedule and shall be requested by the applicant. The applicant shall provide sufficient information to justify all bonus requests. The Development Review Board may, at its sole discretion, request additional information prior to approval of any bonus. Density bonuses are as follows:
   (a) Preservation of natural resources including scenic views, mature tree stands, unique vegetation or unique rock formations not to exceed five (5) percent.
   (b) Preservation of solar access not to exceed five (5) percent. Credit shall be given for the preservation of solar access to ten (10) homes, or ten (10) percent

of the total development, whichever is greater.

(c) Renewable Energy Generation one hundred (100) percent density bonus for projects that generate at least twenty-five (25) percent of the total project energy use through on-site renewable sources (e.g., solar photovoltaic, solar hot water, wind, geothermal, biomass, etc.). Energy use shall be based on professional estimates. The total bonus shall be equal to the percentage of the total project energy generated from on-site solar power generation. Credit may only be granted for preservation of solar access or solar power generation, not both.

(d) Preservation and donation to the City or non-profit organization of open space through the use of clustering, Zero-Lot Lines or other innovative techniques not to exceed five (5) percent.

(e) Provision of recreation facilities which are available to all City residents not to exceed five (5) percent.

(f) Construction of bicycle paths which connect neighborhoods, especially as mapped in the Comprehensive Plan on Map 6: Non-Motorized Transportation, or in conformity to a Bicycle Plan as approved by the Development Review Board not to exceed five (5) percent.

(g) Innovative design which reduces long-term maintenance costs not to exceed five (5) percent.

(h) Provision of affordable housing which is deeded to a land trust or non-profit organization or includes other mechanisms to guarantee the perpetual affordability of the units not to exceed twenty (20) percent. A minimum of ten (10) percent of the total number of units constructed shall be affordable to a family of four with eighty (80) percent of the current median family income (per Federal HUD Standards of Chittenden County).

(i) Other considerations which in the opinion of the Development Review Board provide important community services including the dedication of land for public purposes not to exceed five (5) percent.

B. Design Considerations and Associated Waivers

The Development Review Board may waive requirements of the underlying Zoning District for lot coverage, setbacks, and parking if needed to achieve the objectives of the PUD, Height may be waived only in accordance with sub-section 4 below. Waivers shall be based upon the following criteria and may include specific conditions.

1. **Superior building design, lot layout and landscaping design**. To be granted the flexibility permitted under these regulations, the PUD must demonstrate a level of design and amenity exceeding that typical of conventional development. The proposal shall include all the following except for (e) if not applicable:
   (a) Landscaping. Landscape plan development by a licensed landscape architect regardless of the cost of construction; and reviewed by the Tree Advisory Committee.
   (b) Private open space. For PUDs where every residential unit has ground- floor

access, each residential unit shall include a private outdoor open space (yard, deck or similar), of not less than seven hundred and fifty (750) square feet. For PUDs where some residential units are accessed through stairs, elevators, or a hallway on the second floor or above, each residential unit on the second floor or above shall include a private outdoor space (deck, balcony, or similar) of not less than 40 square feet. Each residential unit on the ground floor shall include a private outdoor space (yard, deck or similar) of not less than 100 square feet.

(c) Common open space. At a minimum, up to fifteen (15) percent of the gross PUD area shall be developed with passive and active amenities. If public amenities exist on adjacent properties connections to those amenities shall be established. Amenities shall include at least one or more of the following, or similar amenity with approval from the Development Review Board:

i. Jogging/exercise track;
ii. Off-street bicycle paths;
iii. Playgrounds;
iv. Tennis court;
v. Athletic fields;
vi. Wooded areas; and
vii. Open fields that may be in active agricultural production

(d) Building Massing. Varied building massing or other measure to reduce monotony in design.

(e) Land Use Intensity Transition. If the proposed development is an increase in land use intensity from the surrounding properties the design shall minimize the intensity of the development adjacent to the less intense properties surrounding it. This may be accomplished through a reduction in building height, landscape buffer, or similar mechanism required by the Development Review Board.

2. **Provision of public open spaces or superior bicycle and pedestrian access.** To be granted the flexibility permitted under these regulations, the PUD must demonstrate site features and design that promotes cycling, walking and transit as a viable means of transportation and recreation for residents, consumers, visitors, and employees. Features shall include at least one or more of the following, or similar amenity with approval from the Development Review Board:

(a) Pedestrian access directly from the building to the public sidewalk;

(b) Construction of bicycle paths which connect neighborhoods, especially as mapped in the Comprehensive Plan on Map 6: Non-Motorized Transportation, or in conformity to a Bicycle Plan as approved by the Development Review Board;

(c) Pocket park with benches or similar amenities between the public realm and the private building (see image box for examples to help clarify the intent of this requirement);

(d) Public art, murals or interactive games;

(e) Covered bus shelter; and
(f) Shade trees.

Public Realm Amenity examples for Section 604.E.4(a)(iv). These images are provided as illustrations of intent.

All images herein are from *Seven Catalytic Placemaking Strategies: A Discussion about the Future of Vermont Downtowns* by Fred Kent, Kathy Madden and Amy Tomasso.

url: https://www.sociallifeproject.org/rural-placemaking-vermont-downtowns/

3. **Joint or combined vehicular access with adjoining properties**. Because a reduction in curb cuts directly onto public roads is beneficial for pedestrian

safety and can help improve access management, waivers will be granted if needed to accommodate joint or combined vehicular access with adjoining properties.

4. **Waiver of building height in Light Industrial District** only as described in Section 611.F.

C. Findings Review Requirements

The Development Review Board shall make the following findings before approving a PUD zoning request:

1. Superior Design. The final plan represents a higher standard of integrated design and amenity than could be achieved under otherwise applicable zoning district and subdivision regulations, and that solely on this basis waivers to the use and design standards established by these regulations are warranted.
2. Meets PUD Requirements. The final plan meets the requirements for Planned Unit Developments set forth in this Code and that no modifications to the use and design standards otherwise applicable are allowed other than those permitted herein.
3. Consistent with General Plan. The final plan is consistent with the Essex Junction Comprehensive Plan.
4. Circulation. The streets, sidewalks, pedestrian ways, bicycle paths, off-street parking and loading as appropriate to the planned uses are provided. That they are adequate in location, size, capacity and design to ensure safe and efficient circulation of automobiles, trucks, bicycles, pedestrians, fire trucks, and garbage trucks without blocking traffic, creating unnecessary through traffic within the preliminary plan, or unduly interfering with the safety or capacity of adjacent thoroughfares.
5. Open Spaces and Landscaping. The quality and quantity of common open spaces and landscaping provided are consistent with the higher standards of design and amenity required in a Planned Unit Development. The size, shape, and location of a substantial portion of total common open space provided in residential areas render it usable for recreation purposes.
6. Phasing. Each proposed development phase of the PUD may, together with any phases that preceded it, exist as an independent unit that meets all the foregoing criteria and all other applicable regulations herein even if no subsequent phase should ever be completed.

SECTION 724: RAISING, KEEPING, OR HARBORING LIVESTOCK

The raising, keeping, or harboring of livestock, wild animals or other domesticated farm animals for personal use or commercial purposes shall be prohibited in all Zoning Districts, except for the PA and PE Districts. The raising, keeping or harboring or livestock, wild animals or other domesticated farm animals shall require a minimum lot size of ten acres. Refer to the Municipal Code for exceptions.

SECTION 725: ABANDONMENT OF STRUCTURES

Within six (6) months after work on an excavation for a building has begun or within six (6) months after a permanent or temporary building or structure has been destroyed, demolished

or abandoned, and determined to be in an unsafe condition, all structural materials shall be removed from the site, and excavation thus remaining shall be covered over or filled to the normal grade by the owner.

SECTION 726: OUTDOOR CANNABIS CULTIVATION

Effective January 1, 2025, and in accordance to 7 V.S.A. § 869, Outdoor Cannabis Cultivator Establishments shall maintain a 50 foot minimum setback distance between the cannabis plant canopy and a property boundary or edge of a highway.

SECTION 727: FOOD TRUCKS

A. Purpose

To allow for the ongoing operation of food trucks on private property in zoning districts where "eating and drinking establishment" is a permitted use.

B. General Standards:

1. Parking for staff and customers shall be provided in accordance with the requirements of Section 703.
2. A food truck itself may be located outside of designated hard-surface parking area so long as the following criteria are met:
   (a) its placement does not impede vehicular circulation
   (b) its placement does not block pedestrian paths
   (c) its placement does not impede emergency access
   (d) its placement does not interfere with stormwater management functions
   (e) the food truck regularly in operation at that location
   (f) the food truck is not operating as a "ghost kitchen"
3. Unless permitted as a temporary use, a food truck shall be considered as permanent principal or accessory structure and shall be approved under the requirements of Section 502.
4. A food truck shall meet the setback, lot coverage, and height requirements of the underlying zoning district.

C. Food Truck Standards:

1. A food truck shall not use a portable gasoline or diesel electric generator unless all of the following conditions are met:
   (a) The food truck is permitted as a temporary use and is operated on a property for fewer than thirty days within any six-month period.
   (b) The generator is not operated between the hours of 10:00pm and 7:00am.
   (c) The noise limits in Section 718.B are met except as waived through a valid Sound Indemnification Agreement with the City.
2. Unless permitted as a temporary use, a food truck operating at a site with one or more other food trucks on the same lot, shall provide staff and customers with access to a restroom.
   (a) If a portable restroom is provided, the structure shall meet all setback requirements of the underlying zoning district, be screened from view from the

street, and shall not produce odors noticeable from adjacent sidewalks and properties.

(b) Restroom access may be provided through a written agreement with a nearby property which has a restroom within 500 feet of the Food Truck. This agreement shall be available upon request by the Administrative Officer.

3. Adequate trash receptables shall be provided near the Food Truck.
4. Food Truck operators shall not dump or otherwise dispose of greywater, wastewater, or grease on site, in tree pits, or storm drains, on the streets, or into any natural body of water.
5. Greywater and wastewater shall be disposed of in accordance with the requirements of Chapter 11 of this Code.

CHAPTER 8: NONCONFORMITIES

SECTION 801: NON-CONFORMING USES

Any use of land or buildings legally existing on the effective date of this Code, which has become non-conforming as a result of this Code shall be considered as a Non-Conforming Use and may be maintained subject to the provision of this Section.

A. Expansion of Non-Conforming Uses

Except as may be provided in this Section, a non-conforming use shall not be expanded or extended to occupy more land or floor area than it occupied on the effective date of this Code and shall not be expanded to displace a conforming use.

B. Change of Use

A non-conforming use may be changed to a Permitted Use or Conditional Use for the district in which it is located. A non-conforming use shall not be changed to another non-conforming use.

C. Discontinuation of a Non-Conforming Use

If a non-conforming use is discontinued or abandoned for a period of one hundred eighty (180) consecutive days, including any period of discontinuation prior to the effective date of this Code, that use shall not be renewed or re-established, and any subsequent use of the lot or structure shall be in conformance with all provisions of this Code.

1. If a non-conforming use is discontinued because the structure in which it is located is destroyed or damaged by fire, flood, windstorm or similar abnormal event, that use may be re-established in the structure when and if it is rebuilt, provided that the structure complies with all provisions of this Code and that the non-complying use occupies no more floor area than it did prior to the event.

SECTION 802: NON-COMPLYING STRUCTURES

Any structure, existing on the effective date of this Code, which does not conform to the dimensional requirements of this Code shall be considered as a non-complying structure. Such structure may continue to be occupied, subject to the following:

A. Disclaimer

Nothing in this Section shall be construed as permitting the use of a structure declared unsafe or to be a fire hazard by any appropriate governmental authority.

B. Maintenance, Repair and Expansion

1. Ordinary repairs and maintenance may be made to a non-complying structure, provided that the structure is not made more non-conforming. Staff shall determine what constitutes "ordinary repairs and maintenance". Appeals of such determinations shall be in accordance with Section 1701.
2. A non-complying structure may be enlarged or expanded provided that the following conditions are met:

(a) The enlargement or expansion, itself, conforms to all provisions of this Code except setbacks.

(b) The structure, as enlarged, does not diminish any required yard or setback areas except a setback line encroachment equal to the existing building line.

(c) The expansion does not exceed any maximum density, lot coverage, intensity or height limitations.

C. Reconstruction

1. If a non-complying structure is destroyed or damaged by fire, flood, windstorm or similar abnormal event, and the cost of restoring the structure to its condition immediately prior to the event exceeds fifty (50) percent of the value of the structure immediately prior to the event, the structure may be restored or reconstructed, upon Conditional Use and Site Plan approval (when site plan approval is applicable), provided that the following conditions are met:

(a) The structure, as restored or reconstructed shall not be more non-complying than the original structure prior to the event.

(b) Except as specified in Section 801.C.1 of this Code, the uses of the restored or reconstructed structure shall conform to all provisions of this Code.

2. Non-conforming structures on properties with one single family dwelling may be rebuilt as long as the new structure is not more non-conforming than the existing structure. However, if staff determines the structure could reasonably be rebuilt in conformance with the existing regulations the applicant will be required to comply with the existing regulations. Appeal of staff decisions may be made in accordance with Section 1701.

SECTION 803: EXISTING SMALL LOTS

Any lot that is legally subdivided, is in individual and separate and nonaffiliated ownership from surrounding properties, and is in existence on the date of enactment of this bylaw, may be developed for the purposes permitted in the district in which it is located, even though the small lot no longer conforms to minimum lot size requirements of the new bylaw. This provision shall not exempt development on such lots from other provisions of this Code.

SECTION 804: ENFORCEMENT; LIMITATIONS

Although not subject to enforcement action pursuant to Chapter 10, uses, structures, and lots which are deemed to be controlled by the Bianchi decision, and the subsequent enactment of 24 VSA Sec. 4454, shall be considered violations that are not considered legal to any extent and shall in no event be granted the consideration or allowances of non-conforming structures, uses, and lots. Thus, no change, alteration, enlargement, and reestablishment after discontinuance for more than one hundred eighty (180) days or reconstruction after a fire, flood, windstorm or similar abnormal event as described in section 802.C, shall be permitted, except to a conforming use, structure, or lot.

CHAPTER 9: SUBDIVISIONS

SECTION 901: PURPOSE

To provide uniform standards for the division of land within the City and to minimize public costs for the maintenance and repair of facilities installed and constructed as a requirement of this Code.

SECTION 902: REQUIRED PERMITS

Nothing in this Chapter shall waive or modify the requirement to obtain other permits as specified in this Code.

SECTION 903: APPLICABILITY

Any proposal or development, which includes the subdivision or division of land for sale or construction purposes, now or in the future, shall meet the requirements of this Chapter.

SECTION 904: GENERAL APPLICATION REQUIREMENT

All proposals for the subdivision of any property shall meet the application requirements as specified in Section 503 of this Code.

SECTION 905: GENERAL STANDARDS

A. Conformity with Other Regulations
No land shall be subdivided except in conformity with the requirements of this Code.

B. Site Suitability
No subdivision shall be approved on any land, which is unsuitable for development due to flood hazard, poor drainage, unstable soils, rock formations, slopes, or other conditions, which may be a hazard to the public health, safety or welfare unless sufficient measures are proposed to mitigate the identified risks.

C. Public Facilities
All subdivision proposals shall demonstrate the adequacy of all public facilities and services including streets, drainage, stormwater treatment, water supply, sanitation facilities, lighting, emergency access, recreation facilities and similar services or facilities. All proposals shall include an analysis of any potential adverse impact of these services or facilities on adjacent land uses.

D. Protection of Significant Features
In all subdivisions, to the maximum extent possible, efforts shall be made to preserve historic sites, scenic views, forested lands, and unique natural physical characteristics. The Development Review Board shall consider all alternatives available to preserve these significant features, including the donation of lands for public purposes.

E. Subdivision Name

Every subdivision shall be given a unique name, which distinguishes it from other existing subdivisions within the City. Every effort shall be made not to duplicate names of subdivisions in adjoining communities.

F. Lot requirements

1. Arrangement. Lot area, width, depth, orientation, and setbacks shall be arranged to minimize impact on adjoining properties and public streets. Double Frontage Lots shall be avoided whenever possible. Frontage on all corner lots shall be increased by a minimum of fifteen (15) percent.
2. Shape. Side lot lines shall be as close as practical to right angles to street lines or radial to curving street lines. Lots shall be no more than twice as deep as the width of the lot.
3. Access. Each lot shall have direct access to a public street. The Development Review Board may approve a private drive, which serves not more than two (2) lots if both lots have the required sixty (60) feet of frontage on a public street for new subdivisions. A private drive can also serve an existing lot without sixty (60) feet of frontage. Secondary access shall be provided whenever possible. The Development Review Board may require secondary access for any subdivision of ten (10) or more lots or units. The Development Review Board may require more than two (2) access points into subdivisions over ten (10) lots or units based on the ability to connect existing or planned streets. The Development Review Board may require a right-of-way(s) accommodate future street connections to adjacent properties in any subdivision.

G. Boundary Adjustments.

1. No additional lots shall be created.
2. No existing lot shall be made non-conforming.
3. No currently non-conforming lot shall be made more non-conforming.
4. No existing structure shall be made non-complying.
5. No currently non-complying structure shall be made more non-complying.

SECTION 906: STREETS

A. General Standards

Streets approved as a part of any subdivision shall be constructed as specified in Appendix A.

B. Arrangement

1. All streets shall be integrated with the existing system of streets.
2. All streets shall be extended to the boundary of the proposed subdivision if the Development Review Board determines a future need for street extensions to serve adjoining property.
3. Street design shall include measures to discourage through traffic in Residential Districts.
4. Street design shall include measures to encourage improved connectivity in the

Village Center District and strike an appropriate balance between all modes of transit.

5. Access for emergency vehicles shall be considered in the layout of any street.

C. Design

1. Streets shall be designed to the extent possible to intersect at right angles. The approach to the intersection should be approximately at right angles for a distance of fifty (50) feet.

2. No intersection shall have more than four (4) approaches. Whenever possible, "T" intersections shall be used in all residential subdivisions.

3. New intersections on one side of the street shall be located immediately across the street from an existing intersection whenever possible. Street jogs with centerline offsets of less than one hundred twenty five (125) feet are prohibited, unless the Development Review Board finds that no reasonable alternative exists.

4. Curb radii shall be adequate for the design speed of any street. All streets shall have curbs on both sides unless a waiver is requested and approved by the Development Review Board for GSI runoff control discharge points. City Council approval is not needed for GSI runoff control discharge point curb cuts as they are not vehicle access points.

5. All right-of-way and pavement widths shall be as specified in the table below. No curbing shall be included in the calculation of pavement widths.

6. The centerline grade of any street shall not exceed eight (8) percent.

7. New streets should be designed to follow the natural topography of the site to the extent possible. The applicant shall provide plan and profile drawings and critical cross-sections of grading plans.

RIGHT OF WAY WIDTHS	
Major Arterials	60 feet
Local residential street	50 feet
Cul de sac Turn-around Diameter	50 feet 100 feet
Private Street Easements	40 feet
Private Driveways	20 feet

PAVEMENT WIDTHS	
Major Arterials	32 feet
Local residential streets	28 feet
Cul de sac Turn-around Diameter	28 feet 75 feet
Private streets	20 feet

Private Driveways	12 feet

D. Dead-end Streets

Dead-end streets may be allowed only on a temporary basis until the street may be extended to adjacent property. The Development Review Board may require a temporary turn-around on any dead-end street. If the dead-end street extends to more than six hundred (600) feet, from the closest intersection, a temporary turnaround shall be required. Dead-end streets shall be limited to one thousand (1,000) feet. When a dead-end street is connected the temporary turn-around or cul de sac shall be removed, returned to grass and deeded to the adjacent property owners at the expense of the developer making the connection. Where undeveloped land lies beyond the developed portion of the subdivision, the Development Review Board shall require that no development occur at the terminus of the dead-end street and the right-of-way improvements be extended to the property line. The Development Review Board has the right to condition or restrict access to any thru street to minimize any negative impact caused by traffic to a specific use where a special and vulnerable population is present with specific needs that would be at risk with thru traffic. Restricted access shall not negate the ability of the Development Review Board to require more than one access point for subdivisions of ten (10) or more lots or units.

Waiver. The Development Review Board may waive the requirement that a dead-end street be temporary if, in the opinion of the Development Review Board, all of the following standards are met:

1. The street connection is not required to provide adequate emergency access to the proposed development, future development on adjacent parcels or development along the dead-end street.
2. The street connection is not necessary to provide a through connection.
3. The street connection is not required to provide a secondary access point to the proposed subdivision, future development on adjacent parcels, or for the properties now served by the dead-end street, in accordance with Section 905.F.3.
4. The street connection is not required to provide convenient vehicular access to the proposed subdivision or future development on adjacent parcels.
5. The street connection is not necessary to accommodate future development on adjacent parcels.

E. Dedications

Unless specifically approved otherwise, all right-of-ways, utility connections, stormwater infrastructure, and streets shall be dedicated to the City in accordance with the deed and acceptance provisions of this LDC. No private streets or drives utilities or stormwater infrastructure shall be accepted by the City until the right-of-way, pavement and construction standards of the City are met in their entirety and deeded to the City with City Council approval. All proposed subdivisions to be served by private infrastructure shall include a proposed homeowners association agreement with the final application. The association agreements shall be reviewed and approved by the City Attorney and City

Engineer, Public Works Superintendent and Water Quality Superintendent prior to final plan approval by the Development Review Board.

F. Street Utilities Easements

Upon specific approval of the Development Review Board, the right-of-way width may be reduced by five (5) feet on either or both sides for a total of ten (10) feet provided that a permanent easement is granted for public use.

G. Right-of-Way Widths

For the purpose of determining right-of-way and pavement widths, the following standards shall apply.

1. Major arterial shall be any street with one or more of the following characteristics:
   (a) The street provides a through connection to adjoining developments.
   (b) The street provides future connections to undeveloped land.
   (c) The street connects two state highways or connects two existing arterials.
   (d) Traffic projections demonstrate a necessity at a future date to construct one or more additional lanes.
   (e) Any subdivision road which facilitates through traffic.
   (f) The street is located in a commercial or non-residential district and the Development Review Board determines a need for the right-of-way for vehicle, pedestrian and bikeway purposes, or for bus transportation purposes.
2. Local residential street shall be any street not designated major arterial, private street or private driveway.
3. Private streets shall be as defined in Section 709 of this Code.
4. Private drives shall serve no more than two (2) lots if both lots have the required sixty (60) feet of frontage on a public street.

H. Curb Cuts

Curb cuts shall be consistent with the provisions of Section 509 and 705 of this Code.

I. Street Surface

Streets shall be hard surfaced. The Development Review Board may waive this requirement for existing private streets that are not hard surfaced and for which the total proposed number of units does not exceed five. The apron and any portion in the public right-of-way must be paved twenty (20) feet beyond the edge of the public right-of-way.

SECTION 907: EASEMENTS

Drainage and utility easements shall be specified on the plat. Easements shall be based upon standard engineering practices for the associated utility and a twenty-five (25) year design storm.

SECTION 908: RECREATIONAL OPEN SPACE

Open space provides ecological, health and social benefits to new and existing residents and

must be incorporated into new developments if required by the Development Review Board based on the standards contained herein. Within any subdivision, site plan, PUD plan the Development Review Board may require the dedication of not more than fifteen (15) percent of the land for open space and recreation purposes. The Development Review Board may require that all or part of the land be developable. The designation of all open space up to and exceeding the fifteen (15) percent that may be required by the Development Review Board shall not be deducted from the total project land area for density purposes if the project is reviewed as a PUD and meets the intent of the Planned Development Standards as listed in Section 511. Under this scenario, density will be calculated on an overall project basis with preserved open space and developed land both counting towards the total land area. Developed areas may then be denser than the underlying zoning district allows in accordance with Development Review Board approval and the planned development standards. The dedicated open space must be preserved indefinitely through either donation of the land to the City or a conservation easement guaranteeing public access. If development is to occur the preservation of open space for agricultural or recreation purposes are important to the long-term environmental sustainability and quality of life in the district. Projects are reviewed on an overall project density basis to allow for the preservation of open space while achieving full build out. Open space networks and preservation of important natural resources should be integrated with new development in such a way as to allow for continued agricultural uses or emerging open space opportunities with responsible development. This dedication does not specifically preclude the use of land for environmental or stormwater purposes if deemed to be in the best interest of the community.

A. Open Space Designation

Land to be preserved shall be chosen for its physical and ecological features including significant ecological functions, access, stormwater management and open space function. Open spaces may provide for a variety of functions including but not limited to agricultural, active recreation, wildlife habitat and natural areas based on the following criteria:

1. Open space uses and functions to meet the needs of existing and future populations.
   b) Physical and ecological functions of the land.
   c) Agreements with other preservation or recreational organizations for the long-term management of the property.
   d) The relationship between the open space and existing and proposed development.
   e) Funding and organization for maintenance of the open space.

SECTION 909: PEDESTRIAN AND BIKEWAY STANDARDS

A. General Standards

1. Concrete Sidewalks shall be constructed along both sides of major arterials and along one side of all other streets. The Development Review Board may waive this requirement in favor of a specific alternative, which provides equal or superior pedestrian access.
   (a) Sidewalks shall be constructed as specified in Appendix A.

(b) Sidewalks shall be a minimum five (5) feet wide. The Development Review Board may require sidewalks along major arterials to be greater than five (5) feet wide if it determines that heavy usage or safety factors justify the added width.

2. The Development Review Board may require other walkways to connect with pedestrian origins or destinations, or to connect with walkways planned or existing on adjacent properties.

(a) Walkways may be surfaced in concrete, bituminous paving or gravel as determined by the level of usage anticipated.

(b) Walkways shall be a minimum five (5) feet wide and constructed to the specifications in Appendix A for the designated material.

3. All subdivisions shall be designed to include bicycle access, unless this requirement is specifically waived by the Development Review Board. The construction of a hard-surfaced bicycle path along one side of a street shall eliminate the need to construct a sidewalk along that side of the street, provided a sidewalk is constructed along the other side of the street.

(a) Bicycle paths shall be ten (10) feet wide.

(b) Bicycle paths shall be surfaced with bituminous paving which meets the specifications for such material in Appendix A.

SECTION 910: INFRASTRUCTURE IMPROVEMENTS

All infrastructure improvements shall meet the applicable standards of the Land Development Code, including but not limited to Appendix A: Public Works Specifications unless an alternate is specifically reviewed and approved by the City Engineer, Public Works Superintendent and/or Water Quality Superintendent as applicable and the Development Review Board. All construction and installation shall be reviewed by the City. The City shall have the authority to require on-site changes as deemed necessary. Infrastructure may be required to be oversized to serve future development, as determined by the Development Review Board.

SECTION 911: MONUMENTS AND LOT CORNER MARKERS

Permanent right-of-way monuments shall be set at all street intersections and at all angles and curves or other critical points in street lines. Each monument shall be a precast concrete post, four (4) inches by four (4) inches and forty-eight (48) inches long. The top shall have a center mark, which shall be the point of reference. The monuments shall be set in place after all other street improvements are completed. Corner markers (i.e. iron rods) shall be set at all corners and angle points of all lots, plots or parcels, and shall be located in the ground below finish grade level. If monuments and lot corner markers are disturbed, they shall be replaced, and any surrounding material shall be repaired.

SECTION 912: STREET LIGHTS

Streetlights shall be located at each intersection and at approximately one hundred fifty (150) foot intervals between intersections. Streetlights shall be located at the corner to provide light at the intersection, where possible. Streetlights shall be provided at major curves and at the ends of cul-de-sacs.

1. Street light poles and fixtures shall be as approved by the Development Review

Board, designed to be harmonious with their surroundings.

2. Street lighting plans shall be approved by the City.

SECTION 913: UTILITY LINES

All services for electricity, cable television, telephone, outdoor lighting, and other utilities shall be located underground. The applicant shall work with utilities to ensure suitable locations for underground installations and necessary above-ground equipment, both for the proposed subdivision and areas adjacent to the subdivision. Above-ground equipment shall not be located within the visibility triangles and shall be hidden from view in the public right-of-way.

SECTION 914: INSTALLATION/GUARANTEES

The applicant shall provide a guarantee for all improvements.

A. Performance Bond

Prior to starting land development or obtaining a zoning permit, the applicant shall furnish the City with a performance bond with appropriate surety or security (as approved by the City Attorney) in an amount to cover the full costs of all new streets and other required public improvements as determined by the City Engineer for a period of two (2) years after acceptance by the City Council. Such bond shall include a provision that the principal of the bond comply with all terms of the final plat approval and shall include, but not be limited to, the performance of all required public improvements. Such bonds shall provide for, and secure to the public, the completion of all required public improvements and the maintenance thereof for a period of two (2) years after the City Council accepts the public streets and other required public improvements.

B. Acceptance of Streets and Open Space

The approval of a Final Plat, or filing of a Final Plat, shall not constitute acceptance of any street, park or other open space shown on such plan. Acceptance shall be by resolution of the City Council.

SECTION 915: AS-BUILT PLANS.

One (1) set of mylars, two (2) paper copies and digital files of plans showing as-built conditions of streets and other infrastructure improvements shall be submitted prior to final inspections and public acceptance of said improvements.

The as-built files shall be submitted in digital form in one of the following options in order of preference:

1. GIS geospatial data. Either a geodatabase or shapefile format. Must be in Vermont State Plane Meters, NAD83 (NSRS or most current).

    f) If sub-part i is not possible, the plat shall be submitted as Coordinated CAD data in Vermont State Plane Coordinates, US Survey Feet, Grid Zone 4400, NAD 83(2011) epoch 2010.0, NAVD 88 (geoid12b).

    g) If sub-parts i and ii are not possible, supply 3 values of State Plane Coordinates on the plan(s).

For stormwater management systems, the Vermont Department of Environmental Conservation's Best Management Practices Tracking spreadsheet with Phosphorus removal numbers shall also be submitted prior to final inspections and public acceptance of said improvements.

SECTION 916: OFF-SITE IMPROVEMENTS

The Development Review Board may require, upon recommendation of the City Engineer, the construction of off-site improvements. Said improvements may include oversize piping, drainage improvements, intersection improvements, traffic control improvements or other improvements necessitated by the proposed development. Arrangements may be made by the applicant to obtain reimbursement from future developments, which utilize the off-site improvements. The City may financially participate in off-site improvements, which improve existing deficiencies.

SECTION 917: WAIVERS/EXCEPTIONS

The Development Review Board may waive or modify the provisions of this Chapter as specified below. Waivers or modifications shall be requested in writing and must be specifically approved by the Development Review Board.

A. Standards

No waiver or modification may be granted unless:

1. The subdivision is consistent with the intent and purpose of all provisions of the Plan and this Code.
2. The waiver or modification would have no significant adverse impact on the public interest or on adjacent property.
3. A superior alternative is proposed which meets all the requirements of this Code.
4. The waiver or modification is necessary to protect or enhance significant existing natural or cultural features such as historic sites, scenic areas, or major tree groupings.
5. The strict application of the specific requirement would be technically impractical in terms of engineering, design and construction practices, due to specific characteristics of the property, which are unique and are not generally existent on other property. In no instance shall this be interpreted to allow the creation of non-conforming lots.

SECTION 914: DEDICATIONS OF PUBLIC INFRASTRUCTURE

Unless specifically approved otherwise, all right-of-ways, utility connections, stormwater infrastructure, and streets shall be dedicated to the City in accordance with the deed and acceptance provisions of this LDC. No private streets or drives, utilities or stormwater infrastructure shall be accepted by the City until the right-of-way, pavement and construction standards of the City are met in their entirety and deeded, or easements conveyed, to the City with Council approval.

SECTION 915: PRIVATE INFRASTRUCTURE

All proposed subdivisions to be served by private infrastructure shall include a proposed homeowners association agreement with the final application. The association agreements shall be reviewed and approved by the City Attorney and City Engineer, Public Works Superintendent and Water Quality Superintendent prior to final plan approval by the Development Review Board.

CHAPTER 10: ENFORCEMENT

SECTION 1001: VIOLATIONS

A. It shall be a violation of this Code for any person to commence any activity for which an approval or permit is required without first obtaining such permit or approval. It shall also be a violation of this Code for any person to fail to comply with all requirements and conditions of any approval or permit granted.

B. The Administrative Officer shall issue a written "Notice of Violation" to any person believed to be in violation of this Code. Such Notice of Violation shall:

1. Describe the activity, which violates this Code;
2. Identify the provisions of this Code, which have been violated;
3. State the specific action required to cure the violation;
4. State that if the violation is not cured within seven (7) days of the Notice of Violation, the City may institute court proceedings to obtain a court order directing compliance with the Code and fines shall be awarded as established by state laws; and
5. State that the Notice of Violation may be appealed to the Development Review Board in accordance with the procedures of Section 1702 of the Code.

C. Upon failure of any person to cure a violation after receipt of a Notice of Violation, the Administrative Officer shall institute an appropriate court action on behalf of the City.

SECTION 1002: ENFORCEMENT THROUGH THE JUDICIAL BUREAU

A. As an alternative to the procedure for enforcing violations of this code and provided for in 24 V.S.A. § 1974a (d) the administrative officer may enforce zoning violations through the Judicial Bureau against the civil offense of being in violation of the standards of this ordinance. (Copy of “Ordinance Enforcement in Judicial Bureau, a Comprehensive Guide” is located in the City Offices or at VT League of Cities and Towns website - http://www.vlct.org).

B. Fines for each offense shall be one hundred (100) U.S. dollars. Each day an offense occurs constitutes a separate offense.

CHAPTER 11: SEWER REGULATIONS

SECTION 1101: SEWER USE RULES AND REGULATIONS

A. Building Sewers and Connections

No unauthorized person shall uncover, make any connections with or opening into, use, alter, or disturb any public sewer or appurtenance thereof without first obtaining a written permit from the City. Any persons proposing a new discharge into the system, or a substantial change in the volume or character of pollutants that are discharged shall notify the City at least forty-five (45) days prior to the proposed change or connection. Producers of potential high strength waste need to contact the Water Quality Superintendent prior to proceeding.

There shall be three (3) classes of building sewer permits:

1. For residential service;
2. For commercial service; and
3. For service to establishments producing industrial wastes.

In all cases, the owner or agent shall make an application to the City. The application shall be supplemented by plans, specifications, or other information pertinent to the application.

All expenses incidental to the installation, maintenance and connection of the building sewer shall be borne by the owner. The owner shall indemnify the City from any loss or damage that may directly or indirectly be caused by the installation of the building sewer.

A separate and independent building sewer shall be provided for all buildings; However, if one building is at the rear of another on an interior lot the sewer may be extended if the following conditions are met:

1. No private sewer is available; and
2. A private sewer can not be constructed to the rear building through an adjoining alley, court, yard, or driveway.

Old building sewers may be used in connection with new buildings if they meet all requirements of this Chapter after examination and test by the City.

The size, slope, alignment, materials of construction, and the methods to be used in excavating, laying pipe, jointing, testing, and backfilling the trench, shall all conform to the requirements of the building and plumbing code or other applicable rules and regulations of the City. In the absence of code provisions, the materials and procedures set forth in appropriate specifications of the A.S.T.M. and State Environmental Protection Rules Chapters 1 (as amended) and other applicable design standards shall be followed. All such connections shall be made gas-tight and water-tight. Any deviation from the prescribed procedures and materials must be approved by the City Engineer before installation.

If possible, the building sewer shall enter the building at an elevation below the basement floor. If the building drain is too low to permit gravity flow, sanitary sewage flow shall be lifted by an approved means and discharged to the building sewer.

No person shall connect roof downspouts, exterior foundation drains, area way drains, other sources of surface runoff, open floor drains, or ground water to a building sewer or building drain, which directly or indirectly connects to a public sanitary sewer

All connections to the public sewer shall conform to the requirements of the building and plumbing code or other applicable rules and regulations of the City or the procedures set forth in appropriate specifications of the A.S.T.M. and W.P.C.F. Manual of Practice No. 9. All such connections shall be made gas-tight and water-tight. Any deviation from the prescribed procedures and materials must be approved by the City Engineer before installation.

The applicant for the building sewer permit shall notify the City when the building sewer is ready for inspection and connection to the public sewer. The connection shall be made under the supervision of the City Engineer or its representative.

Excavations for building sewer installations shall be guarded with barricades and lights to minimize safety hazard. Streets, sidewalks, and other public property disturbed in the course of the work shall be restored in a manner satisfactory to the City Engineer.

B. Use of Sewers

No person shall discharge or cause to be discharged any storm water, surface water, ground water, roof runoff, subsurface drainage, floor drain, uncontaminated cooling water, or unpolluted industrial process water to any sanitary sewer.

Combined sewer systems are specifically prohibited.

No person shall discharge or cause to be discharged any of the following described waters or wastes to any public sewers:

1. Any gasoline, benzene, naphtha, fuel oil, dry cleaning fluid, or other flammable or explosive liquid, solid, or gas.
2. Any waters or wastes containing toxic or poisonous solids, liquids, or gases in sufficient quantity, either singly or by interaction with other wastes, to injure or interfere with any sewage treatment process, constitute a hazard to humans or animals, create a public nuisance, or create any hazard in the receiving waters of the sewage treatment plant.
3. Any waters or wastes having a pH lower than five (5.0), nor greater than nine and one half (9.5), or having corrosive property capable of causing damage or hazard to structures, equipment, and personnel.
4. Solid or viscous grease, fats and/or oils or other substances, in quantities or sizes capable of obstructing sewer flow or interfering with the operation of the treatment

plant. Other substances include, but are not limited to ashes, cinders, sand, mud, straw, shavings, metal, glass, rags, feathers, tar, plastics, wood, unground garbage, whole blood, paunch manure, hair and fleshings, entrails, and paper products, either whole or ground by garbage grinders.

No person shall discharge or cause to be discharged the following described substances, materials, waters, or wastes, if in the opinion of the City Engineer such wastes can harm the sewer, sewage treatment process, or equipment, adversely affect the receiving stream, or endanger life, limb, public property, or constitute a nuisance. Discharge to drain of an otherwise regulated material through an unapproved pretreatment unit is specifically prohibited. In determining the acceptability of these wastes, the City Engineer will consider such factors as the quantities of subject wastes in relation to sewer flows and velocities, sewer construction materials, the sewage treatment process, sewage treatment plant capacity, ability to treat wastes in the sewage treatment plant, and other relevant factors. The substances prohibited are:

1. Any liquid or vapor having a temperature higher than one hundred fifty (150) degrees Fahrenheit (sixty five (65) degrees Celsius).
2. Any water or waste containing fats, wax, grease, or oils, whether emulsified or not, in excess of one hundred (100) mg/l or containing substances which may solidify or become viscous at temperatures between thirty-two (32) and one hundred fifty (150) degrees Fahrenheit (zero (0) and sixty-five (65) degrees Celsius).
3. Any garbage that has not been properly shredded. The installation and operation of any garbage grinder equipped with a motor of three-fourths (3/4) horsepower (0.76 hp metric) or greater shall be subject to the review and approval of Staff.
4. Any waters or wastes containing strong acid iron pickling wastes, or concentrated plating solutions whether neutralized or not.
5. Any water or wastes containing iron, cadmium, lead, mercury, selenium, chromium, copper, zinc, and similar objectionable or toxic substances; or wastes exerting an excessive chlorine requirement, to such a degree that any such material received in the composite sewage at the sewage treatment works exceeds the limits established by the City Engineer for such materials or is proven to provide for significant degradation of the byproduct sludge from the treatment process.
6. Any waters or wastes containing phenols or other taste or odor producing substances, in such concentrations exceeding limits which may be established by the City as necessary, after treatment of the composite sewage to meet the requirements of the State, Federal, or other public agencies or jurisdiction for such discharge to the receiving waters.
7. Any radioactive wastes or isotopes of such half-life or concentration as may exceed limits established by the City Engineer in compliance with applicable State or Federal regulations.
8. Any waters or wastes having a pH in excess of nine and one half (9.5).
9. Materials, which exert or cause:

(a) Unusual concentrations or inert suspended solids (such as, but not limited to, Fullers earth, lime slurries, and lime residues) or of dissolved solids (such as but not limited to sodium chloride and sodium sulfate).
(b) Excessive discoloration (such as, but not limited to, dye wastes and vegetable tanning solutions).
(c) Unusual BOD, chemical oxygen demand, or chlorine requirements in such quantities as to constitute a significant load on the sewage treatment works, may cause the affluent limitations of the discharge permit to be exceeded.
(d) Unusual volume of flow or concentration of wastes constituting "slugs" as defined herein.

10. Water or wastes containing substances which are not amenable to treatment or reduction by the sewage treatment processes employed, or which cannot meet the regulations of agencies with authority over discharge to the receiving waters.

If any waters or wastes are discharged, or proposed for discharge to the public sewers, which contain the substances or characteristics enumerated in Section B of this Chapter, and which in the judgment of the City Engineer, may have a deleterious effect upon the sewage works, processes, equipment, sludge quality, or receiving waters, or which may create a hazard to life or constitute a public nuisance, the City Engineer may:
(a) Reject the wastes,
(b) Require pretreatment to an acceptable condition for discharge to the public sewers,
(c) Require control over the quantities and rates of discharge.

If the City Engineer permits the pretreatment or equalization of waste flows, the design and installation of plants and equipment shall be reviewed and approved by the City Engineer, subject to the requirements of applicable codes, ordinances, laws, and the municipal discharge permit. Further, such pretreatment installations must be consistent with the requirements of any state pretreatment permit issued.

Grease, oil, and sand interceptors shall be provided if, in the opinion of the City Engineer, they are necessary to properly handle liquid wastes with excessive amounts of grease, flammable wastes, sand, or other harmful ingredients; Interceptors shall not be required for private living quarters or dwelling units. All interceptors shall be of a type and capacity approved by the City Engineer and shall be located as to be readily and easily accessible for cleaning and inspection. Installation of an interceptor does not infer an obligation by the City Engineer to accept segregated material for further treatment or disposal.

If preliminary treatment or flow-equalizing facilities are provided for any waters or wastes, they shall be maintained in satisfactory and effective operation at the owner’s expense.

If required by the City Engineer, the owner of property served by a building sewer, which carries industrial wastes, shall install a control manhole together with meters and appurtenances as necessary to facilitate observation, sampling, and measurement of wastes. The manhole shall be located and constructed in accordance with plans approved

by the City Engineer. The manhole shall be installed at the owner's expense and shall be maintained to be safe and accessible at all times to City staff and representatives.

All industries discharging into a public sewer shall monitor their discharges as reasonably required by the City Engineer. Participating industry shall be responsible for reasonable expenses incurred by the City Engineer and WWTF Staff for unusual sampling in determining conformance with these sewer regulations. Such instances can include, but shall not be limited to, compliance monitoring, duplicate analysis check samples, or random sampling for compliance. Where industrial pretreatment permits are issued by the State of Vermont, monitoring records must also be submitted to the Secretary in accord with such permit and submitted to the Water Quality Superintendent on the same schedule as compliance reporting to the ANR. Detailed records of analysis or any other monitoring shall be made available upon request by Staff to the Secretary or agency with jurisdiction over discharges to the receiving waters.

All measurements, tests, and analyses of the characteristics of waters and wastes shall be determined in accordance with the latest edition of "Standard Methods for the Examination of Water and Wastewater" published by the Water Environment Association and the American Public Health Association, and shall be determined at the control manhole provided, or upon samples taken at said control manhole. If no special manhole has been required, the control manhole shall be the nearest downstream manhole from the point at which the building sewer is connected. Sampling shall be carried out by customarily accepted methods to reflect the effect of constituents upon the sewage works and to determine the existence of hazards to life, limb, and property. (The particular analyses involved will determine whether a composite of all outfalls of a premise is appropriate, or whether a grab sample or samples should be taken). Normally, but not always, BOD and suspended solids analyses are obtained from composites of all outfalls whereas pH's may be determined from periodic grab samples.

Any industry in violation of the provisions of this Chapter may have its disposal authorization terminated as in condition 1101 E.

Nothing in this Chapter shall be construed to prevent a special agreement or arrangement between the City, other cities or towns and any industrial concern whereby an industrial waste of unusual strength or character may be accepted by the City for treatment. Any special agreement may be subject to payment by the industrial concern and no agreements shall contravene any requirements of existing Federal or State laws. Except as specifically provided, no privy, privy vault, septic tank, cesspool, or other facility intended or used for sewage disposal may be constructed.

Any house, building, or property used for human occupancy, employment, recreation, or other purposes, which abuts an alley, street, or right-of-way with a sewer (or which will abut a sewer line in the future) shall install toilet facilities and connect said facilities to the proper public sewer in accordance with the provisions of this Chapter, within ninety (90)

days after receipt of official notice.

C. Use of the Public Sewers

No unauthorized person shall maliciously, willfully, or negligently break, damage, destroy, uncover, deface, or tamper with any structure, appurtenance, or equipment which is a part of the sewage works. Any person violating this provision shall be subject to immediate arrest under charge of disorderly conduct.

D. Powers and Authority of Inspectors

Any duly authorized employee of the City shall be permitted to enter all properties for the purposes of inspection, observation, measurement, sampling, and testing in accordance with the provisions of this Chapter. The City shall have no authority to inquire into any processes (including metallurgical, chemical, oil, refining, ceramic, paper, or other industries) except as the process has a direct bearing on the kind and source of discharge to the sewers or waterways or facilities for waste treatment.

While performing the necessary work on private property referred to in this Chapter, duly authorized employees of the City shall observe all safety rules applicable to the premises established by the company and the company shall be held harmless for injury or death to the City employees. The City shall indemnify the company against liability claims and demands for personal injury or property damage asserted against the company and growing out of the gauging and sampling operation, except as such may be caused by negligence or failure of the company to maintain safe conditions.

The City shall be permitted to enter all private property over which the City holds an easement for the purposes of, but not limited to inspection, observation, measurement, sampling, repair, and maintenance of any portion of the sewage works lying within said easement. All entry and subsequent work within said easement shall be completed in accordance with the terms of the easement.

E. Penalties

Any person violating any provision of this Chapter shall be served by the City with written notice stating the nature of the violation and providing a reasonable time limit for the satisfactory correction thereof. The offender shall, within the time stated in such notice, permanently cease all violations.

Any person who shall continue any violation beyond the time limit specified, shall be guilty of a misdemeanor, and on conviction thereof shall be fined in an amount not exceeding five hundred (500) US dollars for each violation. Each week in which any such violation shall continue shall be deemed a separate offense.

Any person violating any of the provisions of this Section shall become liable to the City for any expense, loss, or damage occasioned the City by reason of such offense.

F. Validity

The invalidity of any section, clause, sentence, or provisions of this Section shall not affect the validity of any other part of this Section, which can be given effect without such invalid part or parts.

G. Charges for Debt Service and Operation/Maintenance

The City Council shall include in the annual City general, wastewater and sanitation budgets, an amount sufficient to repay the cost of development and construction of the City of Essex Junction public sewer system.

Tax exempt property and Federal, State and municipal properties connected to the City of Essex Junction public sewerage system shall be subject to sewer rents for the discharge of debt service.

The City Council shall annually establish a user charge rate in US dollars per one thousand (1,000) gallons of water consumed for all premises connected to the City public sewer system for the payment of operating costs, maintenance and repair of the system. The established annual user charge rate shall be made known to each user of the system.

The user charge rate established by the City Council shall be applied to the annual consumption of water by the user as metered by the City and the wastewater quantities transmitted to the City for treatment by the Towns of Essex and Williston measured in accordance with the prevailing inter-municipal agreement.

The City Council reserves the right to assess charges in a fair and equitable manner for use of the public sewer system by metered water usage or by contract in the event a user does not fall within any of the classifications listed in this Chapter.

Failure of any owner or agent to receive a bill shall not excuse non-payment. If the owner fails to receive a bill, he/she shall obtain a bill from the City Clerk.
Collection of delinquent charges may be enforced by the City pursuant to 24 V.S.A. 3612, 24 V.S.A. 2615, and 24 V.S.A. Chapter 129.

The City Clerk shall file all delinquent charges in accordance with 24 V.S.A. Chapter 129, Uniform Water and Sewer Disconnect.

The City Council shall have the right to abate any and all delinquent penalty charges, which, in their sole and uncontrolled discretion, deem to be in the best interest of the City to abate.

Pursuant to 24 V.S.A. 3611 all revenues received from sewer rents including interest and penalties thereof shall be credited to the City general fund for the payment of debt service and all revenues received from the user charges shall be credited to a special fund to be known as the "Public Sewerage System Operations and Maintenance Account".

A user of the public sewerage system identified as a contributor of a toxic substance to the sewerage system shall be assessed a charge equal to the added cost of processing that waste.

H. Commercial and Industrial Cost Recovery System

All wastewaters entering the City of Essex Junction public sewerage system are domestic type wastes. The City retains the right to surcharge as allowed by State and Federal law, all waste streams consistently to be stronger than domestic type wastes. Surcharges imposed will be in proportional increments in relation to typical domestic sewage normally measured at two hundred and twenty (220) mg/1 each five (5) day BOD and/or total suspended solids.

I. Private Sewage Disposal

Off-Site - All new development shall be directly connected to a public sewer. Existing state and federal approved private wastewater treatment systems in the Light Industrial District are exempt from this requirement. Food Trucks are also exempt from this requirement.

The developer is required to provide such pumping and other facilities as necessary. Improvements to existing City facilities may be required when significant impact to sanitary sewage infrastructure is determined through the subdivision permitting review. The Development Review Board may require at the applicant's expense, the installation of larger sewer lines, pumping and other facilities, outside the development, if the sewer service would otherwise be inadequate.

This exception shall not apply when lots are created as part of a major subdivision. Major subdivisions shall discharge to the public sewer system. An exception may be granted by the City Council for the development of one single-family residence, commercial or light industrial use estimated to discharge under five thousand (5,000) gallons per day per unit if the applicant meets all of the following requirements:

1. The lot to be developed is more than one thousand (1,000) feet from an existing public sewer line having capacity to serve those lots, or that there are unique physical conditions that prohibit or severely restrict the connection to a public sewer; for example, class one or two wetland, steep slope in excess of twenty (20) percent, ledge material.
2. The lot has a minimum acre of three (3) acres.
3. Facilities will be designed and installed as specified in all applicable City and State regulations and standards.

Prior to construction of a private sewage disposal system, the owner shall obtain a written permit. The applicant shall supplement the permit with plans, specifications, and other information as deemed necessary by the City.

A permit for a private sewage disposal system shall not be effective until installation is completed to the satisfaction of the City Engineer. The City Engineer shall be allowed to

inspect the work at any stage of construction. The applicant shall notify Staff when the work is ready for final inspection, prior to covering any underground portions. The inspection shall be made within twenty-four (24) hours of receipt of notice by the City Engineer.

Construction Drawings and Technical Specifications shall include: Details of proposed connections with the existing sewage disposal system or adequate provisions for on-site disposal or septic waste disposal. If on-site sewage disposal is proposed, the locations and results of tests to ascertain subsurface soils, rock and groundwater conditions shall be provided. All tests and design criteria shall be in accordance with applicable State and local regulations or standards (See State Health Regulations).

When a public sewer becomes available to a property served by a private sewage disposal system, a direct connection shall be made to the public sewer in compliance with this Chapter. Any septic tanks, cesspools, or similar disposal facilities shall be abandoned and filled with suitable material.

The owner shall operate and maintain the private sewage disposal facilities in a sanitary manner at all times, at no expense to the City.

No statement contained in this Chapter shall be construed to interfere with any additional requirements that may be imposed by the Health Officer.

When an existing on-site system is abandoned, it must be cleaned of sludge and filled with clean bank-run gravel or dirt within ninety (90) days from the date the septic system was abandoned. Whenever an existing septic system fails, as determined by the Health Officer, the property owner(s), at their expense, will be required to connect to the public sewer within ninety (90) days, unless the property owner receives an exception from the City Council and complies with all of the following requirements:

1. The lot is more than three hundred (300) feet from a public right of way with an existing public sewer main having capacity to serve the use in question, or that there are unique physical conditions that prohibit or severely restrict the connection to a public sewer, for example, class one or two wetlands, steep slope in excess of twenty (20) percent, ledge material; and
2. Facilities will be designed and installed as specified in all applicable City and State regulations and standards.

If any septic system fails and the property owner does not receive an exemption from the City Council, the septic system shall be cleaned of sludge and filled with clean bank-run gravel or dirt within ninety (90) days from the date that the septic system was determined to have failed by the Health Officer.

J. Private Sewers

"Private sewers" shall mean a sewer in which all owners of abutting properties have equal

rights through an association of abutting property owners or any sewer line that is not owned and maintained by the City. Private sewers shall be permitted only when:

1. The sewer serves buildings which front on an approved road; or
2. The elevations of the building drains for a series of buildings are too low to permit gravity flow directly to the public sewer and a private sewer is the most economical means for connecting the building drains to the public sewers.
3. The private sewer serves no more than three (3) lots.
4. Plans of the private sewer are provided which accurately show the location, elevation and size of mains and laterals.
5. The private sewer has sufficient capacity for all users connected to it, as certified by a registered engineer.
6. Written permission is obtained from all property owners presently connected to the line.
7. All private sewers shall be located outside the City Right-of-way and shall be designed by a registered engineer licensed to practice in the State of Vermont and constructed to City standards (subject to the approval of the City Engineer). Bylaws for the association of owners controlling the private sewer shall:
   (a) Be subject to approval by the Development Review Board;
   (b) Be included in the deed for each property abutting the private sewer in perpetuity; and
   (c) Include a statement absolving the City from any responsibility for the operation and maintenance of the private sewer and indemnify the City for any liability for damage associated with the private sewer.
8. All private sewers shall be connected to the public sewer system, existing state and federal approved private wastewater treatment systems in the Light Industrial District are exempt from this requirement.
9. After a private sewer system has been approved as specified herein, additional connections to that private sewer system shall be prohibited unless they are approved by the Development Review Board and the City Engineer.
10. The City Engineer will have the authority to require any necessary repairs to private sewer laterals or lines (including the connection to the City main). All laterals and services from the main to the building are private. If the private owner refuses to repair the lateral when requested to do so by the City Engineer, the City Engineer can contract for these repairs and bill the private owner for all actual costs. These charges will become part of the sewer bill.

K. Pump Stations

Sewage Lift Stations shall be constructed when topography/or other relevant site conditions warrant. Sewage to be centrally collected and “raised” to the surface for continued gravity flow to the central treatment facility. Any constructed sewage lift station shall be owned and maintained by the site developer, homeowners association, or other private entity unless the Sewage Lift Station is built in accordance with theses general specifications and the City agrees to accept the Lift Station upon completion of the installation. Acceptance shall include all appurtenant structures, applicable warranties and

sureties. Acceptance shall include and be concluded with transfer of the station and its property where installed, by warranty deed to the Municipality.

Whereas reliability is important to protect the public health, facilities constructed to transmit sewage from a service area greater than ten (10) homes shall be of the following general type and configuration: (Note: The City will not accept for ownership any Wet Pit Submersible Pump stations).

Wet Well/Dry Pit: For capacity of output less than one hundred (100) gallons per minute a duplex station.
For capacity of output greater than one hundred (100) gallons per minute a vacuum primed or a flooded suction duplex centrifugal pump stations will
be considered. No suction lift shall be greater than nineteen (19) feet.

Design considerations shall be based on the most current Agency of Natural resources Sewage Flow Estimating Tables - Environmental Protection Rules and be designed in accordance with the "Recommended Standards for Wastewater Facilities" (commonly known as the Ten State Standards) as the Vermont Department of Environmental Conservation, Wastewater Management Division. Emergency storage or pumping provisions shall be provided as required by the Regulators.

Wet well design shall be such that pump cycles shall run for approximately five (5) minutes with a minimum force main velocity of two (2.0) ft/second without using gravity lines for available storage.

Level control shall be by an integrated, submerged level transducer with field adjustable set points. Control shall provide for LED Readout of wet well level and provide for set points for high level alarm and low-level alarm. Also, integrated into the control system will be a redundant iron construction control operated by a wet well float switch with adjustable time out from zero (0) to five (5) minutes when the float switch contact opens. A proportional signal output of four (4) to twenty (20) milliamps shall be provided. Signal output shall be proportional to level indicator.

1. Flooded Suction Non-Clog Sewage Pump Station.
   i) Close coupled motor driven with mechanical seal lubricated and pressurized from backhead.
   ii) Non clog.
   iii) Able to pass a sphere of three (3) inches diameter.
   iv) Heavy cast iron construction.
   v) Motors shall be three (3) phase premium efficiency with the bearing nearest the motor as radial and thrust load and upper bearing radial only.
   vi) Closed cast iron impeller.
   vii) Factory built in one (1) complete assembly.

h) Wet Well Mounted Duplex Pump Station.
   i) Close coupled motor driven with mechanical seal lubricated and pressurized from backhead.
   ii) Non-clog.
   iii) Able to pass a sphere of three (3) inches diameter.
   iv) Heavy cast iron construction.
   v) Motors shall be three (3) phase premium efficiency with the bearing nearest the motor as radial and thrust load and upper bearing radial only.
   vi) Closed cast iron impeller.
   vii) Factory built in one (1) complete assembly.
   viii) Vacuum primed.
   ix) Hinged fiberglass cover with drip edge - lockable with integrated latch to keep hatch in open position.
   x) Adjustable/closeable vent louvers.
   xi) Pumps shall be designed for the use of vacuum priming and mechanical sealing.

i) Wet Well Mounted Pump Station with Duplex Recessed Impeller Type.
   i) Close coupled motor driven with mechanical seal lubricated and pressurized from backhead.
   ii) Non-clog.
   iii) Able to pass a sphere of three (3) inches diameter.
   iv) Heavy cast
   v) Motors shall be three (3) phase premium efficiency with the bearing nearest the motor as radial and thrust load and upper bearing radial only.
   vi) Closed cast iron impeller.
   vii) Factory built in one (1) complete assembly.

SECTION 1102: SEWER ALLOCATION

A. Allocation of Capacity

Wastewater discharge capacity shall be requested by an applicant who has submitted an application for a Zoning Permit, Sketch Plan Approval or Site Plan Approval for a proposed project. To obtain an allocation project information shall be provided using the Sewer Allocation Request form. The application shall include 1) Calculation of the development wastewater flow to be generated by the project in the amount of gallons/day requested, (use the State of Vermont Wastewater System and Portable Water Supply Rules Subchapter 8) . 2) Unless waived by the Manager or Board all projects generating more than one thousand gallons per day shall be certified by a Vermont licensed professional engineer. Applicants under this section shall be allocated capacity according to the date they apply for an allocation of capacity under this Chapter in an amount equal to that approved by the Water Quality Superintendent. Applicable Sewer Allocation fees must be paid by the applicant prior to the issuance of a zoning permit.

B. Expiration of Allocations

Any allocation of capacity shall expire two (3) years from the date allocation is issued by the Water Quality Superintendent if the improvements needing such capacity are not substantially completed. For good cause shown, Staff may approve a one (1) year extension provided a request for such extension is filed with Staff at least thirty (30) days prior to the expiration of the initial three (3) year period, or the expiration of subsequent (1) year extensions.

For the purposes of this Chapter improvements shall be substantially completed when they are capable of being issued a Certificate of Occupancy.

C. Assignability of Allocations

Allocations of capacity is not alienable, assignable or transferable without written approval of the City. Allocation may not be sold or transferred for use on property other than that for which the allocation is initially granted. Any change in use that impacts wastewater characterization or allocation amount that differs from what was approved shall be submitted to the City for a reallocation request.

D. Administration

Requests for allocation of capacity under this Chapter shall be submitted on the Sewer Allocation Request Form and shall be accompanied by an application fee established by the City Council.

Except as provided below, the Staff shall act to approve or deny any request for allocation of capacity within thirty (30) days of the receipt of said application. Failure to act within said thirty (30) day period shall not constitute approval of an application.

A decision of the Staff to approve or deny an allocation of capacity under this Chapter shall be appealable to the City Council.

Staff shall have no authority to approve a request for allocation of capacity in an amount of ten thousand (10,000) gallons per day or greater. Staff shall forward a request for such allocation to the City Council who shall hold a public hearing. The City Council shall give due consideration to the following:

1. Whether the proposed project complies with the Comprehensive Plan and City Ordinances in effect, or which have been warned for public hearing before the City Council.
2. Ability of the City's Wastewater Treatment facility and collection system to accommodate the proposed discharge.
3. Impact of the proposed allocation on the City's ability to sustain balanced growth within the limits of remaining available capacity.

CHAPTER 12: RESERVED

CHAPTER 13: RESERVED

CHAPTER 14: WATER SYSTEM MANAGEMENT AND USE

SECTION 1401: APPLICABILITY

Any person obtaining water from the City of Essex Junction shall agree to the following regulations and such other regulations as the City may establish to manage the water system.

SECTION 1402: APPLICATIONS

A. The applicant must state fully and truly the purposes for which the water shall be required and shall agree to conform to these regulations. No person supplied with water from the City mains will be entitled to use it for any purpose other than those stated on the application. Application for any other water use shall require a separate permit application.

B. The owner of record shall be responsible for any permit issued or work completed under the provisions of this Chapter. The owner shall keep the City advised of the address to which bills, notices, and other communications are to be delivered. The owner of the premises shall be held responsible for all water payments. A change of tenants or premises will not relieve the owners from the payment of a back bill.

SECTION 1403: METER REQUIREMENTS

Under no circumstances are plumbers or persons other than those authorized by the City permitted to turn water on or off at the meter. The water will not in any instance be turned onto any premises for use until a meter has been suitably attached as provided herein.

SECTION 1404: WATER DAMAGE

A. All persons taking water must keep the fixtures and service pipe within their own premises in good repair and fully protected from frost and must prevent unnecessary leakage of water. The City shall not be liable for leakage of hydrants, pipes or fixtures upon the premises of the consumer, nor from any obstructions therein by freezing or otherwise, nor for damages resulting from any of the foregoing causes. All leaks that are on the building side of the curb stop will be repaired at the private owners' cost.

B. The City shall not be liable for any injury, loss or damage of whatever nature occasioned by the failure to maintain a constant or uniform pressure in the water mains, or for damages occasioned by or growing out of a stoppage of said water by frost or other cause, or for damage occasioned by or growing out of an insufficient supply of the same, or for accident or damage of any kind caused by or growing out of the use or failure of said water.

SECTION 1405: DISCONTINUATION

When the owner desires to discontinue the use of water, notice must be given to the City. Water rates will be collected for all water used until the water is shut off at the curb stop.

SECTION 1406: ABATEMENT

No abatement of water rates will be allowed by reason of disuse or diminished use, or vacancy of premises, unless notice is given to the City previous to the change. No refunds or abatements shall be made for any of the reasons specified in Section 1404.

SECTION 1407: WATER USAGE

No person shall give away or use water for any purpose other than that for which payment has been made. No person shall, in any way, pollute the waters of any collecting basin, or reservoir, or in any way interfere or meddle with, or obstruct access to any stopcocks or hydrants or other appurtenances of the City water system.

SECTION 1408: FIRE HYDRANTS

The City shall, from time to time, examine City fire hydrants. Except when shut off for repairs, all hydrants shall be kept in working order, and all defective hydrants shall be repaired without unnecessary delay. No person shall open any hydrant or draw water there from except the City or persons under their direction or the officers of the Fire Department and members of the fire companies under their direction for fire purposes.

SECTION 1409: WATER METERS

All residential meters shall be furnished by the City and the meters shall be placed in a manner as may be satisfactory to the City. The type, make and size of the meters shall be as the City may prescribe and approve. The costs of any damage to the meters by frost, hot water, improper usage or neglect shall be paid by the property owners including removal and reinstallation. In no case shall the City furnish water through any meter of which they do not have exclusive control.

SECTION 1410: MULTIPLE USE OF METERS

If different parties occupy the same building or premises and are supplied from the same service pipe or meter, all the occupants will have the water cut off for the failure of any one of the consumers to pay their bill. There shall not be two or more services on one meter except where permitted by the City.

SECTION 1411: METER FAILURES

If, from any cause, a meter fails to register the amount of water passing through it, the consumer will be charged the average daily rate as shown by the meter when in working order.

SECTION 1412: WATER METER CONNECTIONS

Users of meters must connect all water-using fixtures on their premises with their meters in such a manner that all water used will be measured. All water passing through meters must be paid for, whether used or wasted. All meters must be set under the direction of the City and shall not be moved or disturbed without permission. The use of water through a meter so that the meter will not, in the opinion of the City, accurately measure water usage will not be allowed. In such cases the City shall cause the meter or meters to be placed on such service to accurately measure water usage.

SECTION 1413: PAYMENT

Payment shall be due within thirty (30) days of the mailing date.

SECTION 1414: DELINQUENT PAYMENTS

If payment is not received within thirty (30) days from the due date, they are subject a five (5) percent penalty. Disconnections shall be pursuant to VSA Title 24 Chapter 129, Uniform Water and Sewer Disconnect.

SECTION 1415: OTHER CITY RIGHTS

The City is granted the following right:

A. To permit water to run in exposed places at such times and in such quantities as they may direct.

B. To shut off the water for repairs at any time.

C. To change the regulations and rates.

D. To adopt temporary regulations as needed for emergencies.

E. To not apply as a co-applicant to privately funded water line extensions when it is deemed not to meet provisions of this code OR if not deemed in the best interest of the City of Essex Junction.

SECTION 1416: WATER SUPPLY

A. Off-Site

All new development (residential, commercial and industrial) must be directly connected to a public water main. The developer is required to provide such facilities as may be necessary. The developer may be required by the Development Review Board to provide or to have installed at his/her expense, larger water lines, meters, and other facilities outside the development, if the water service would otherwise be inadequate.

B. Exception

An exception may be granted by City Council for the development of one single-family residence, commercial or light industrial use if the applicant meets all of the following requirements:

1. The lot to be developed is more than one thousand (1,000) feet from an existing public water line having capacity to serve those lots, or that there are unique physical conditions that prohibit or severely restrict the connection to a public sewer; for example, class one or two wetlands, steep slopes in excess of twenty (20) percent, or ledge material.
2. Each lot has a minimum area of three (3) acres.
3. Facilities will be designed and installed as specified in all applicable City and

State regulations and standards.

Whenever an existing private water supply fails, as determined by the Health Officer, the property owner(s), at their expense, will be required to connect to the public water main within ninety (90) days, unless the property owner receives an exception from the Council and complies with all of the following requirements:

1. The lot is more than three hundred (300) feet from a public right-of-way with an existing public water main having capacity to serve the use in question, or that there are unique physical conditions that prohibit or severely restrict the connection to a public sewer, for example, class one or two wetlands, steep slope in excess of twenty (20) percent, or ledge material; and
2. Facilities will be designed and installed as specified in all applicable City and State regulations and standards.

C. Private Water Lines

Private water lines may be approved and connections to existing private water lines may be approved, if the following conditions are met:

1. A private water line shall serve no more than three (3) separate users.
2. The private water line shall be located within an easement granted to the City providing access to the line and absolving the City of all maintenance responsibilities.
3. Curb stops shall be provided for each user connection.
4. A water meter shall be installed at each user structure by the City in conformance with this Chapter.
5. Written permission for the new connection is obtained from all property owners connected to the line.
6. The water line shall be designed by a professional engineer licensed to practice in Vermont.
7. The engineer shall provide plans showing the accurate location of the existing main, all laterals, and the size and type of piping. The engineer shall certify that the existing private water line can provide sufficient water at adequate pressure to all current and proposed connections to the line. After construction of the line, pressure and disinfection testing records shall be submitted to the City along with the design Engineer's certification that the work was completed in accordance with the approved plans.
8. The City will have the authority to require any necessary repairs to private water lines (including the connection to the City main). All lines from the main to the building are private. If the private owner refuses to repair the line when requested to do so by the City Engineer, the City can contract for these repairs and bill the private owner for all actual costs. These charges will become part of the water bill.

D. Construction Drawings and Technical Specifications

Details of proposed connections with the existing public system or adequate provisions for an on-site water system shall be submitted. If an on-site water system is proposed, in accordance with Section 1416.B, the locations and results of tests to ascertain subsurface

soils, rock and groundwater conditions shall be provided. All tests and design criteria shall conform to applicable State and local regulations or standards.

SECTION 1417: PENALTIES

Any person violating any of the above rules will be liable for a fine. Any person convicted of vandalism to property under this Chapter shall pay treble damage costs.

CHAPTER 15: RESERVED

CHAPTER 16: RESERVED

CHAPTER 17: APPEALS

SECTION 1701: ADMINISTRATIVE DETERMINATIONS

A. Purpose
To provide for the timely response to requests for interpretation of provisions of this Code.

B. Filing of Application
A request for interpretation does not require a formal application. However, all requests shall be in writing and shall refer to the sections of the Code upon which the request is based.

C. Staff Review
Staff shall provide a written response to any written request. Nothing in this section authorizes Staff to approve any application unless specifically authorized.

D. Interested Persons
For the purposes of appeals, an interested person means any one of the following:

1. A person owning title to property, or a municipality or solid waste management district empowered to condemn it or an interest in it, affected by a bylaw, who alleges that the bylaw imposes on the property unreasonable or inappropriate restrictions of present or potential use under the particular circumstances of the case.
2. The municipality that has a plan or a bylaw at issue in an appeal brought under this chapter or any municipality that adjoins that municipality.
3. A person owning or occupying property in the immediate neighborhood of a property that is the subject of any decision or act taken under this chapter, who can demonstrate a physical or environmental impact on the person's interest under the criteria reviewed, and who alleges that the decision or act, if confirmed, will not be in accord with the policies, purposes, or terms of the plan or bylaw of that municipality.
4. Any ten (10) persons who may be any combination of voters or real property owners within a municipality listed in subdivision (2) of this subsection who, by signed petition to the appropriate municipal panel of a municipality, the plan or a bylaw of which is at issue in any appeal brought under this title, allege that any relief requested by a person under this title, if granted, will not be in accord with the policies, purposes, or terms of the plan or bylaw of that municipality. This petition to the appropriate municipal panel must designate one person to serve as the representative of the petitioners regarding all matters related to the appeal.
5. Any department and administrative subdivision of this state owning property or any interest in property within a municipality listed in subdivision (2) of this subsection, and the agency of commerce and community development of this state.

E. Appeals
A prospective applicant may appeal administrative determinations as follows:

1. A determination that a Zoning Permit is required under Section 502.A to the

Development Review Board following the procedures of Section 1702.

2. A determination that one or more approvals set forth in Section 502.A.1 are required to the Development Review Board following the procedures of Section 1702.

3. A determination that Subdivision Approval is required under Section 503 to the Development Review Board following the procedures of Section 1704.

4. A determination that a Public Sewer System Approval is required under Section 504 to the City Council following the procedures of Section 1705.

5. A determination that a Private Sewer System Approval is required under Section 505 to the City Council following the procedures of Section 1705.

6. A determination that a Noise Standard Waiver is required under Section 506 to the City Council following the procedures of Section 1705.

7. A determination that a Public Water System Approval is required under Section 507 to the City Council following the procedures of Section 1705.

8. A determination that a Private Water System Approval is required under Section 508 to the City Council following the procedures of Section 1705.

9. A determination that a Public Road Access Approval is required under Section 509 to the City Council following the procedures of Section 1705.

10. Any appeal of a Staff interpretation or determination shall be in accordance with the provisions of Section 303 except as specifically provided herein.

F. Standards of Review

Staff shall review all requests based upon provisions of this Code and the rules of interpretation as contained herein. Staff shall issue a letter of interpretation within 14 days of receipt of a written request. Determinations shall be limited as follows:

1. A determination that a particular use, which does not fall under a definition of one of the uses specified in the Use Chart in Section 622 of this Code, is clearly not allowed within the District or is substantially similar to one of the permitted or conditional uses within the District.

2. An interpretation of any definition of any term within this Code as it affects any proposed development.

3. An interpretation of any administrative or application procedure.

4. An interpretation of any Zoning District boundary.

5. An interpretation of the completeness of materials submitted for any review.

6. An interpretation of any policies established by any Board or Commission of the City of Essex Junction.

7. A determination that an application for an amendment to an approved Planned Development requires new Conceptual Plan Approval.

8. A determination that a proposed amendment to an approved Site Plan is a major or minor amendment.

SECTION 1702: APPEALS OF STAFF DECISIONS PURSUANT TO SECTION 502

A. Purpose

To provide a mechanism by which interested parties may appeal a Staff decision under any

subsection of section 502 regarding an application.

B. Notice of Appeal
Any interested person who believes that the Administrative Officer has committed an error in making a decision or taking an action may appeal such act or decision to the Development Review Board by filing a written Notice of Appeal with the City Clerk within fifteen (15) calendar days of the subject action or decision. A copy of the notice of appeal shall be filed with the administrative officer. The Notice of Appeal must identify the decision or action appealed and state why such decision or action is erroneous.

C. Action by the Development Review Board
The Board shall conduct a duly warned Public Hearing at which it will take testimony and receive evidence from the applicant, Staff and interested parties. The Board shall then consider all relevant evidence before it and shall render its decision and issue signed findings of fact and conclusions within forty-five (45) days of the Public Hearing. Failure to act within this time shall result in granting of the Appeal.

D. Standards of Review
The Board shall review any appeal in accordance with the following:
1. Review is restricted to Staff decision appealed.
2. Any interpretation shall fully consider the intent of the provision or sections of Code upon which the Appeal is based.
3. Any interpretation shall fully consider the intent of all applicable provisions of the Comprehensive Plan.

SECTION 1703: REQUESTS FOR VARIANCES FROM THE REQUIREMENTS OF CHAPTERS 6 and 7

A. Purpose
To provide a mechanism for granting relief from a specific requirement of this Code, which when strictly applied to a specific parcel may cause undue hardship for the applicant.

B. Action by Development Review Board
The Board may approve or deny an application for a Variance. The Board may grant only the minimum relief necessary to allow the applicant reasonable use of the property in question. A use variance shall not be granted.

No Variance may grant rights to a particular piece of property, which is not allowed on other properties within the District except as necessary to allow reasonable use of the property as intended within the District.

C. Standards of Review
In accordance with Section 4469 of Title 24, Chapter 117, of Vermont Statutes Annotated, the Board may grant Variances if it finds that all of the following standards of review are met and such findings are included in its written decisions.

1. There are unique physical circumstances or conditions, including irregularity, narrowness, or shallowness of lot size or shape, or exceptional topographical or other physical conditions peculiar to the particular property, and that unnecessary hardship is due to these conditions, and not the circumstances or conditions generally created by the provisions of the bylaw in the neighborhood or district in which the property is located.
2. Because of these physical circumstances or conditions, there is no possibility that the property can be developed in strict conformity with the provisions of the bylaw, and that the authorization of a variance is therefore necessary to enable the reasonable use of the property.
3. Unnecessary hardship has not been created by the appellant.
4. The variance, if authorized, will not alter the essential character of the neighborhood or district in which the property is located, substantially or permanently impair the appropriate use or development of adjacent property, reduce access to renewable energy resources, or be detrimental to the public welfare.
5. The variance, if authorized, will represent the minimum variance that will afford relief and will represent the least deviation possible from the bylaw and from the plan.
6. A request for a Variance that is primarily a request for a renewable energy resource structure shall meet only the following criteria:
   (a) It is unusually difficult or unduly expensive for the appellant to build a suitable renewable energy resource structure in conformance with the bylaws.
   (b) The hardship was not created by the appellant.
   (c) The variance, if authorized, will not alter the essential character of the neighborhood or district in which the property is located, substantially or permanently impair the appropriate use or development of adjacent property, reduce access to renewable energy resources, or be detrimental to the public welfare.
   (d) The variance, if authorized, will represent the minimum variance that will afford relief and will represent the least deviation possible from the bylaws and from the plan.
   (e) In rendering a decision in favor of an appellant under this section, the Development Review Board may attach such conditions to variances as it may consider necessary and appropriate under the circumstances to implement the purposes of this chapter and the plan of the municipality then in effect.

D. Effect of Approval or Denial

Approval by the Board authorizes the applicant to apply for a Zoning Permit in accord with the Findings as signed by the Board. An application which was denied may not be refiled within six (6) months of the effective date of the denial unless substantive new evidence is submitted.

SECTION 1704: APPEALS OF STAFF DECISIONS TO THE DEVELOPMENT REVIEW BOARD

A. Purpose

To provide a mechanism by which interested parties may appeal the:

1. Classification of activities at an Exposition Center PUD pursuant to Section 502.E.6; or
2. Staff decisions regarding Site Plan Approvals pursuant to Section 502.I.10; or
3. Administrative determinations of Staff regarding the applicability of subdivision review to a particular project; or
4. A decision of Staff under the provisions of Section 503.B, regarding classification of a project or a determination that an application is not complete.

B. Notice of Appeal

Any interested person who believes that Staff has committed an error in making a decision or taking an action may appeal such act or decision to the Development Review Board by filing a written Notice of Appeal with the City Clerk within fifteen (15) calendar days of the subject action or decision. A copy of the notice of appeal shall be filed with the administrative officer. The Notice of Appeal must identify the decision or action appealed and state why such decision or action is erroneous.

C. Action by the Board

The Board shall conduct a duly warned public hearing at which it will take testimony and receive evidence from the applicant, interested parties and Staff. The Board shall consider all relevant evidence before it. It shall issue its decision in writing with findings of fact and conclusions within forty-five (45) days of the final public hearing. Failure to act within this time shall result in granting the appeal.

D. Standard of Review

In an appeal under this Section, the Board shall proceed de novo but shall limit its review and decision to the specific decision or action appealed.

SECTION 1705: APPEALS TO THE CITY COUNCIL

A. Purpose

To provide a mechanism by which interested parties may appeal any decision or act of Staff under the provisions of Sections 504-509, including administrative determinations, and determinations that an application is not complete.

B. Notice of Appeal

Any interested person who believes that the Staff has committed an error in making a decision or taking an action may appeal such act or decision to the City Council by filing a written Notice of Appeal with the City Clerk within 15 calendar days of the subject action or decision. The Notice of Appeal must identify the decision or action appealed and state why such decision or action is erroneous.

C. Action by the City Council

The Council shall conduct a duly warned Public Hearing, except in those matters identified

in subsection E below, at which it will take testimony and receive evidence from the applicant, interested parties and Staff. The Council shall consider all relevant evidence before it. It shall issue its decision in writing with findings of fact and conclusions within forty-five (45) days of the final public hearing. Failure to act within this time shall result in granting of the Appeal.

D. Standard of Review
In an appeal under this Section, the Council shall proceed de novo but shall limit its review and decision to the specific decision or action appealed.

E. Matters Not Requiring a Public Hearing
The City Council shall not be required to hold a public hearing for consideration of the following matters:

1. Review of Staff determination pursuant to Section 506 that a waiver is required from the standards of Chapter 13. The identified matters may be considered by the City Council and decided at a regular or special meeting of the Council.

F. Decisions of the City Council shall be final.

SECTION 1706: APPEALS FROM DEVELOPMENT REVIEW BOARD DECISIONS

Decisions of the Development Review Board made pursuant to Sections 1702, 1703 and 1704 may be appealed to the Environmental Division in accordance with the provisions of 24 V.S.A. §4471. All appeals shall be on the record.

SECTION 1707: ON THE RECORD REVIEW

As provided for in 24 V.S.A. § 4471 (b) the use of on the record review procedures will be followed for all development applications that require review by the Development Review Board. The procedures outlined in the Municipal Administrative Procedure Act (MAPA) shall govern all Development Review Board application reviews. Evidence provided and recorded at public meetings and hearings shall follow the Vermont Rules of Evidence as outlined in 24 V.S.A. § 1206 (b).

APPENDIX A: PUBLIC WORKS SPECIFICATIONS

SECTION 101: TITLE, PURPOSE AND APPLICABILITY

A. Title. This Chapter shall be entitled the "Public Works Minimum Specifications" of the City of Essex Junction.

B. Purpose. The City Council may adopt, and from time to time, amend, specifications for the design and construction of streets, water distribution facilities, sanitary sewer facilities, storm water facilities, and improvements and facilities appurtenant to any of these facilities. Such standards may apply to new construction and to reconstruction of existing facilities. Such standards may also apply to the construction or reconstruction of such facilities, whether publicly or privately owned, if such facilities connect to facilities which are publicly owned. Prior to the adoption of any such standards, the Council shall consider such standards at a public meeting. Following such consideration, the Council shall act to adopt, not adopt, or adopt such standards with amendments by appropriate resolution of the Council.

C. Applicability. The provisions of this Chapter shall be applicable to any new construction as well as to reconstruction made necessary by obsolescence or deterioration. Variations from these specifications shall not be permitted without written approval by the City Engineer. It shall be the policy that all engineering design be based on the latest methods and technologies when determining sizes, strengths and quantities.

For the purposes of this Chapter, City Engineer shall mean the person or persons appointed by the Council in accord with the City Charter to act in that capacity. The City Engineer may authorize alteration in design or materials used when construction conditions justify such changes.

SECTION 102: STREET SPECIFICATIONS

A. Description. This item shall consist of a sub-base course of sand as approved by the Engineer and constructed on a prepared subgrade in accordance with the sections as shown on the accepted drawings.

B. Materials. Sand shall consist of material reasonably free from silt, loam, clay, or organic matter. It shall conform to the Vermont Standard Specification for sand borrow, No. 703.03A. It shall be obtained from approved sources and shall meet the requirements set forth in this table:

Sieve Designation	Percentage by Weight Passing Square Mesh Sieve
2"	100
1 ½ "	90-100
½ "	70-100
No. 4	60-100
No. 100	0-20
No. 200	0-8

C. Preparation of Subgrade. Objectionable and unsuitable materials shall be removed and replaced with approved material as directed by the City Engineer. Subgrade shall meet the lines and grades shown on the drawings.

1. Sand shall be deposited and spread so as to distribute the material in uniform layers, compacted to a density of ninety-five (95) percent of the maximum dry density using the Standard Proctor Test, according to ASTM D698.
2. Underdrains shall be installed where necessary to provide subgrade stabilization or to prevent the accumulation of water beneath the roadway in areas of highly frost reactive soils.
3. In areas where soil conditions are poor, the City reserves the right to require that an inert filter fabric be installed beneath the roadbed.

SECTION 103: GRAVEL BASE - BOTTOM COURSE

A. Description. This item shall consist of a base course composed of dense graded crushed stone in accordance with VAOT specification 704.06A, as approved by the Engineer and constructed on a prepared subgrade in accordance with the sections as shown on the accepted drawings.

B. Materials. All materials shall be secured from approved sources. Such gravel shall consist of hard, durable stones, which show uniform resistance to abrasion, and which are intermixed with sand or other approved binding material as directed by the Engineer. It shall meet the requirements of Vermont Standard Specification Item No. 704.06A, Dense Graded Crushed Stone for Sub-base. The gravel shall be uniformly graded from coarse to fine and shall meet the grading requirements set forth in this table:

Sieve Designation	Percentage by Weight Passing Square Mesh Sieve
3 ½”	100
3”	90-100
2”	75-100
1”	50-80
½”	30-60
No. 4	15-40
No. 200	0-6

All bottom course material shall be deposited and spread so as to distribute the material in uniform layers, compacted to a density of ninety-five (95) percent of the maximum dry density using the Standard Proctor Test, according to ASTM D698.

C. Preparation of Subgrade. All boulders, organic material, soft clay, spongy material and any other objectionable and unsuitable material shall be removed and replaced with approved material as directed by the City Engineer. The subgrade shall be complete with all underdrains, sand blanket, or filter fabric in place. Approval of the City Engineer shall be necessary prior to placing of gravel bottom course.

SECTION 104: CRUSHER RUN - TOP COURSE

A. Description. This item shall consist of an upper course of crusher run gravel to be placed over the gravel base - bottom course, which will have been prepared in accordance with these specifications. This upper course shall conform to the following specifications and be placed in accordance with the lines, grades, and typical cross-sections as shown in the accepted drawings. Material shall meet Vermont Standard Specification Item No. 704.05A - Fine; crushed gravel for sub-base.

B. Materials. All materials shall be secured from approved sources. This gravel shall consist of angular and round fragments of hard durable rock of uniform quality throughout, reasonably free from thin, elongated pieces, soft or disintegrated stone, dirt or other objectionable matter. The grading requirements shall conform to the following table:

Sieve Designation	Percentage by Weight Passing Square Mesh Sieve
2"	100
1 ½”	90-100
No. 4	30-60
No. 100	0-12
No. 200	0-6

This upper course of crusher run gravel shall be deposited and spread in a uniform layer and compacted to a density of 95% of the maximum dry density using the Standard Proctor Test, according to ASTM D698.

SECTION 105: BITUMINOUS CONCRETE PAVEMENT

A. Description. This type of pavement shall be composed of mineral aggregate, mineral filler if required, and bituminous material, plant mixed and laid hot. This pavement shall be constructed in two (2) courses on the prepared or existing base in accordance with these specifications and in conformity with the lines, grades, thickness and typical cross-sections shown on the accepted drawings. No puddles will be allowed on streets or sidewalks.

B. Material:

1. The course aggregate shall consist of clean, hard crushed rock or screened crushed gravel free from dirt or foreign matter. It shall be reasonably free from soft and elongated pieces.
2. The fine mineral aggregate shall consist of sand or a mixture of sand and stone screenings of which at least fifty (50) percent by weight shall be sand. The sand shall consist of clean, hard, durable grains, free from dirt, unsuitable material, and pieces, which are structurally weak.
3. The asphalt cement shall conform to all the requirements as set forth by the State of Vermont Standard Specifications for Highway Construction. (Section 702).

C. Construction Methods. Equipment for spreading and finishing the mixture shall be a mechanical spreading and finishing machine provided with an activated screed and heated if required. The machine shall be capable of spreading the mixture without segregation and shall be approved by the City Engineer before being used.

Application of bituminous concrete pavement shall conform in all respects to Vermont Standard Specifications Section 406. These requirements shall include but not be limited to the following:

1. Weather Conditions, unless otherwise approved by the City Engineer. The plant mixed material shall not be placed between November 1 and May 1. Bituminous wearing course shall not be applied prior to May 15 or after October 15. The material shall not be placed when the air temperature at the paving site in the shade and away from artificial heat, is forty (40) degrees Fahrenheit or lower. Placing shall not begin until the air temperature is over forty (40) degrees Fahrenheit and rising.
2. Spreading and Finishing. Immediately before placing the bituminous mixture, the existing surface shall be cleaned of all loose or unsuitable material. Contact surfaces of pavement, curbing, gutters and manholes shall be painted with a thin, uniform coat of Emulsified Asphalt Type RS-1 immediately prior to placement of the mixture against them.
3. Compaction. Immediately after the bituminous mixture has been spread, struck off and surface irregularities adjusted, it shall be thoroughly and uniformly compacted by rolling. Along forms, curbs, headers, walls and other places not accessible to the rollers, the mixture shall be thoroughly compacted with hot or lightly oiled hand tampers, smoothing irons or with mechanical tampers. On depressed areas, a trench roller may be used or cleated compression strips may be used under the roller to transmit compression to the depressed area.
4. Surface Tolerance. The base course shall be finished to within a grade tolerance of one quarter (¼) inch, provided that this deviation is not maintained for a distance longer than fifty (50) feet, and provided that the required crown or super-elevation is maintained. The surface course will be tested by the Engineer using a sixteen (16) foot straight edge at selected locations parallel with the centerline. Any variations exceeding one eighth (1/8) of an inch between any two contacts shall be satisfactorily eliminated. A ten (10) foot straight edge may be used on a vertical curve. The straight edges shall be provided by the contractor.
5. Bituminous concrete pavement and pathways shall be constructed using a mechanical spreading and finishing machine and shall be approved by the City Engineer. After placement, the material shall be thoroughly compacted with rollers or other equipment approved by the City Engineer.

SECTION 106: CEMENT CONCRETE CURB

A. Description. This item shall consist of a Portland Cement concrete curb constructed on a prepared subgrade in accordance with these specifications and the cross-section shown on the accepted drawings. In general, each property is allowed one curb cut. Additional curb cuts, and curb cut locations, and layout shall be as specified in Section 705 of this code.

B. Materials. All concrete used in the construction of roadway curbs shall be Air Entrained five percent plus or minus one percent (5.0% $\pm$ 1%) so determined by an air meter approved by the City Engineer. This concrete shall have a twenty-eight (28) day compressive strength of four thousand (4000) psi and meet State of Vermont Standard Specifications for Class A concrete, Section 541.

C. Construction Methods.

1. Preparation of subgrade - All boulders, organic material, soft clay, spongy material and any other objectionable material shall be removed and replaced with approved material. The concrete curbing shall be built to the required line and grade on a sub-base of gravel six (6) inches in depth, which shall be fully compacted.

2. Forms for concrete - The forms shall be of metal or of acceptable planed and matched lumber and of such construction that a smooth surface will be produced. All forms shall be oiled.

3. Placing and finishing concrete - Just prior to placing the concrete, the subgrade shall be moistened. The concrete mixed to the proper consistency shall be placed in the forms and thoroughly tamped in place so that all honeycombs will be eliminated and sufficient mortar will be brought to the surface. The use of vibrators or other compaction equipment to move the concrete within the forms is not approved. The curbing shall immediately upon removal of the forms, be rubbed down to a smooth and uniform finish, no plastering or patching will be allowed. After the forms have been removed, the trench shall be backfilled with approved gravel and fill as needed and thoroughly tamped, care being taken not to affect the alignment or grade of the curbing.

4. Expansion and contraction joints – One half-inch (1/2”) expansion joints shall be placed at intervals of twenty (20) feet for continuous pours. At intervals not greater than ten (10) feet nor less than five (5) feet, the concrete curbs shall be scored for a depth equal to one-third (1/3) the total depth of the concrete.

5. Curing the concrete - When completed, the concrete shall be kept moist for a period of not less than three (3) days and longer if the Engineer deems necessary and shall be protected from the elements in an approved manner. If the contractor elects, he may apply an approved curing compound according to directions of the manufacturer.

6. Seasonal Limits - No concrete shall be poured on a frost or thawing subgrade or during unseasonable weather conditions, or when the temperature is forty (40) degrees Fahrenheit or lower and falling.

7. Anti-Spalling Compound - Upon completion of the initial curing period (approximately twenty eight (28) days after placement), Anti-Spalling Compound is to be applied in two (2) coats. The first coat shall be applied at the rate of twenty-five thousandths (0.025) of a gallon per square yard and the second coat at a rate of fifteen thousandths (0.015) of a gallon per square yard. The air temperature during application shall not be lower than fifty (50) degrees Fahrenheit. All exposed surfaces shall be treated and shall be exceptionally clean prior to the time of application.

SECTION 107: GRANITE CURB

A. Description. This item shall consist of a granite curb constructed on a prepared subgrade in accordance with these specifications and the cross-section shown on the accepted drawings.

B. Materials:

1. All curbs shall be obtained from approved sources and shall meet the requirements of Sections 707.01, Mortar, Type I and 729.01, Vertical Granite Curb of the Standard Specifications for Highway and Bridge Construction, Vermont Department of Highways.

2. Curb shall be cut from hard durable quarried granite, grey in color and free from seams, cracks or other structural defects. Curbstones shall be furnished in minimum lengths of six (6) feet and the top surface shall be sawed to true plane plus or minus one eighth (±1/8) of an inch. The top front arias line shall be rounded to a two (2) inch radius and the front face shall be smooth quarry split. The top eight (8) inches of the front face shall have no projections greater than one (1) inch or depressions deeper than two (2) inches.

3. Curb Cuts - Same as for Cement Concrete Curb, as specified in section 705 of this Code.

C. Construction.

1. Excavation shall be made to the required depth and the base material shall be compacted to a firm true surface. A fine dirty stone such as "ShurPac" shall be used to level the bed for the curb.

2. Curb stones shall be set so that the front arias line conforms to the line and grade shown on the plan.

3. No joints larger than one (1) inch will be permitted between stones. All joints shall be completely filled with Type I Mortar and shall be neatly pointed on front and top.

4. Topsoil shall be filled against the back of curb and shall be blended to existing lawns. Fill slopes shall not exceed six to one (6:1) unless authorized by the Engineer.

SECTION 108: CEMENT CONCRETE SIDEWALK

A. Description. This item shall consist of sidewalk made of one course Portland Cement concrete not less than four (4) inches thick and with a width of not less than five (5) feet. Where physical constraints exist, and at the discretion of the City, existing sidewalks less than five (5) feet may be reconstructed with a width less than five (5) feet. Where the sidewalk crosses a driveway the depth of concrete shall not be less than six (6) inches and, in some areas not less than eight (8) inches for the full width of the driveway. The sidewalk shall be constructed in accordance with these specifications and the cross-sections as shown on the accepted drawings.

B. Materials. Same as for Cement Concrete Curb.

C. Construction Methods:

1. Preparation of Subgrade - All boulders, organic material, soft clay, spongy material, and any other objectionable material shall be removed and replaced with

approved material. The subgrade shall be properly shaped, rolled and uniformly compacted to conform with the accepted cross-sections and grades.

2. Base - Six (6) inches of compacted, approved gravel (704.05A-Fine) shall be constructed on the subgrade to accepted cross-sections and grades. Twelve (12) inches base is required for drive aprons.

3. Forms for Concrete - The forms for the concrete shall be made of wood or metal, well oiled, straight, free from warps or kinks and of sufficient strength. They shall be staked securely enough to resist the pressure of the concrete to be deposited, they shall not vary from the approved line and grade and shall be kept so until the concrete has set.

4. Placing and Finishing Concrete - Just prior to placing the concrete, the sub-base shall be moistened. The concrete mixed to the proper consistency shall be placed in the forms and thoroughly tamped in place so that all honeycombs will be eliminated and sufficient mortar will be brought to the surface. Unless otherwise approved by the City, sidewalk shall be cast in one hundred (100) foot sections with no expansion joints. Connection to existing sidewalk and between one hundred (100) foot sections shall be accomplished with steel dowels, spaced twelve (12) inches on center. Sidewalk adjacent to curb shall be separated with four (4) millimeter polyethylene. After this, the surface shall be brought to a smooth even finish by means of a wooden float. The surface shall be broom finished. All faces adjacent to the forms shall be spaded so that after the forms are stripped, the surface of the faces will be smooth, even and free of honeycombs. All edges shall be tool rounded with an edger having a quarter (0.25) inch radius.

5. Scoring Concrete - Sidewalk joints shall be saw cut at five (5) foot intervals to one third (1/3) the sidewalk depth. Struck transverse false joints shall not be utilized. Connections to existing concrete requires minimum one half (1/2) inch smooth steel dowels, spaced twelve (12) inches on center, and shall be installed by drilling.

6. Curing Concrete - All sidewalks shall be treated with Certi-Vex AC 1315, per the manufacturer's instructions.

7. Backfilling - Backfill shall be of suitable plant mixed gravel and shall be placed and tamped until firm and solid. Backfilling shall follow immediately after the concrete forms have been removed.

8. Seasonal Limits - Same as for Cement Concrete Curb.

9. Anti-Spalling Compound - Same as for Cement Concrete Curb.

D. Accessible Access. Sidewalk ramps shall be constructed as shown in these specifications and located in accordance with the approved plans at all intersections. Detectable surface shall be truncated domes constructed of cast iron. Saw cutting, exposed aggregate, or scoring sidewalk ramps is not acceptable.

SECTION 109: CEMENT CONCRETE DRIVEWAY APRONS (PRIVATE AND COMMERCIAL DRIVES)

A. Description. This item shall consist of a Portland Cement Concrete driveway apron not less than six (6) inches thick and in some areas not less than eight (8) inches thick at the discretion of the City. The sub-base shall be constructed on the approved subgrade in accordance with these specifications and as shown on the accepted drawings.

B. Materials. Same as for Cement Concrete Curb.

C. Construction Methods.

1. Preparation of Subgrade - Same as for Cement Concrete Sidewalk.

j) Forms for Concrete - same as for Cement Concrete Curb.

k) Placing and Finishing Concrete - Same as for Cement Concrete Sidewalk.

l) Curb - Curbs shall be constructed so as to protrude one (1) inch above the roadway surface at the entrance to the driveway. This curb shall be constructed with a smooth and gradual depression transition.

m) Sidewalks - The section of sidewalk at the driveway shall be constructed to a thickness of not less than six (6) inches, but in some areas not less than eight (8) inches at the discretion of the City Engineer.

n) Curing Concrete - Same as for Cement Concrete Curb.

o) Seasonal Limits - Same as for Cement Concrete Curb.

p) Anti-Spalling Compound - Same as for Cement Concrete Curb.

SECTION 110: BITUMINOUS CONCRETE DRIVEWAY APRONS (PRIVATE AND COMMERCIAL DRIVES)

A. Description. Same as for Bituminous Concrete pavement.

B. Materials Same as for Bituminous Concrete Pavement.

C. Construction Methods

1. Preparation of Subgrade - Same as for Cement Concrete Sidewalk. Minimum of twelve (12) inches compacted gravel (704.05A-Fine).
2. Curb - Same as for Cement Concrete Driveway Aprons.
3. Sidewalks - Same as for Cement Concrete Sidewalks.
4. Method of Application - To be approved by the Engineer.

SECTION 111: RIGHT OF WAY MONUMENTS

A. Description. This item shall consist of installing Right-of-way monuments below finish grade at all street corners and all points of curvature and/or tangency as shown on the accepted plans.

B. Materials. Concrete - Concrete monuments shall be precast in one piece four (4) inches by four (4) inches by thirty-six (36) inches of Class B Concrete with four (4) reinforcing steel rods. Monuments shall meet the requirements of Title 26, Chapter 45, and Part 5 Minimum Standards for the Practice of Land Surveying.

C. Construction Methods.

1. The monuments shall be erected at locations indicated on the Plans, or as directed by the City Engineer. They shall be set vertically and to a depth so that the top of the monument is at an established grade. The monuments are to be set in place after all other street development is completed.

2. The location of monuments shall be established by a surveyor licensed to practice in the State of Vermont.

SECTION 112: WATER DISTRIBUTION SPECIFICATIONS

A. Description. This item shall consist of the excavation and backfilling required for the complete construction of the water mains, which shall include valves, tees, hydrants, elbows, reducers and all other appurtenances necessary for a complete water main system as indicated on the accepted drawings.

B. Materials.

1. Pipes - Water mains shall be double cement-lined Ductile Iron Pipe, A.W.W.A. thickness Class fifty two (52) of the size shown on the accepted plans: (Minimum diameter – eight (8) inches). PVC water mains are not acceptable.

2) Fittings - All fittings are to be mechanical joint cement lined Ductile Iron A.W.W.A., pressure rating three hundred and fifty (350) psi to twelve (12) inch diameter pipe, and to meet requirements of A.W.W.A. Standards C 110-77.

3) Other materials may be accepted on a case-by-case basis.

C. Gate Valves - Gate valves shall be A.W.W.A. C 500-80 Standard Gate Valves with mechanical joints of sizes as required on the plans. All valves shall be of cast or ductile iron body, parallel brass seats, non-rising stem, inside screw, resilient wedge construction with "O" Ring Stem Seals. All valves to be equipped with a valve box for a minimum of five (5) feet of cover material. The gate valves shall open left and be designed for a working pressure of two hundred (200) psi.

D. Construction Methods.

1. Installation - All water main installation and testing shall be made in accordance with A.W.W.A. Standard C.600. Depth of cover shall be no less than six (6) feet on all mains, valves, and fittings. In areas where deep fills occur, the fill shall be applied in six (6) inch layers and each layer shall be compacted to ninety-five (95) percent Standard Proctor Density.

2. Excavation - The trench shall be excavated to the line and grade shown on the drawings. The trench should be as narrow as possible but ample to permit the pipe to be laid and joined properly.

3. Bell Holes - Holes for the bells shall be provided at each joint but shall be no larger than necessary for joint assembly and assurance that the pipe barrel will lie flat on the trench bottom. Push-on type joints require only minimum depressions for bell holes.

4. Rock Conditions - When excavation of rock is encountered, all rock shall be removed to provide a clearance of at least six (6) inches below and on each side of all pipe, valves, and fittings. When excavation is completed, a layer of appropriate backfill material shall be placed on the bottom of the trench to the previously mentioned depths, leveled, and tamped. All temporary supports need to be removed prior to burying the pipe.

Temporary support, adequate protection, and maintenance of all underground structures, drains, sewers, and other obstructions encountered in the progress of the work shall be furnished by the contractor.

5. Unsuitable Subgrade Material - When the subgrade is found to include ashes, cinders, refuse, organic material, or other unsuitable material, such material shall be removed to a minimum of at least six (6) inches and replaced with clean, stable backfill material. When such materials are encountered, polyethylene encasement should be used. The bedding shall be consolidated and leveled in order that the pipe may be installed properly.

6. Pipe Plugs - At times when pipe laying is not in progress, the open ends of pipe shall be closed by a water-tight plug or other means approved by the Engineer. The plug shall remain in place until the trench is pumped completely dry. Care must be taken to prevent pipe flotation should the trench fill with water.

7. Joint Deflection - When it is necessary to deflect pipe from a straight line in either the horizontal or vertical plane, the amount of joint deflection shall not exceed five (5) degrees or eighteen (18) inches per eighteen (18) feet of pipe length.

8. Backfill Material - All backfill material shall be free from cinders, ashes, refuse, vegetable or organic material, boulders, rocks or stones, frozen soil, or other material that, in the opinion of the Engineer, is unsuitable.

(a) From one (1) foot above top of the pipe to the subgrade of the pavement, material containing stones up to eight (8) inches in their greatest dimension may be used, unless otherwise specified.

(b) When the type of backfill material is not indicated on the plans or is not specified, the excavated material may be used, provided that such material consists of loam, sand, gravel, clay, or other materials that, in the opinion of the Engineer, are suitable for backfilling.

(c) If excavated material is indicated on the drawings or specified for backfill, and there is a deficiency due to a rejection of part thereof, the required amount of sand, gravel or other approved material shall be provided.

9. Valve Location - Valves in water mains shall, where practical, be located within the street property lines unless shown otherwise on the plans, but not in the paved surface of the street or the sidewalks. Mains shall be drained through drainage branches or blow-offs. Drainage branches, blow-offs, air vents and appurtenances shall be provided with valves and shall be located and installed as shown on the plans. Drainage branches or blow-offs shall not be directly connected to any storm or sanitary sewer, submerged in any stream, or be installed in any other manner that will permit back-siphonage into the distribution system.

10. Valve Protection - A valve box or a vault shall be provided for every valve. All gate vale boxes, extensions and risers shall be cast iron.

11. Thrust Blocks - All plugs, caps, tees, hydrants, and bends deflecting twenty-two and a half (22 ½) degrees or more shall be provided with a thrust block bearing against undisturbed soil. At the approval of the Engineer, the contractor may, in proper soil conditions, install concrete blocks to provide thrust for water pipes.

12. Testing and Acceptance - The pipeline upon completion shall be tested for pressure and leakage by the contractor, in the presence of the Engineer, to a pressure of at least one and half (1.5) times the working pressure in the line at the lowest point or two hundred (200) psi, whichever is greater, for two (2) hours duration and shall not vary by more than plus or minus five (±5) psi. Any defective work shown by this test will be replaced by the contractor at no extra cost to the owner. The contractor shall furnish all material, labor, and appliances for testing pipe sections as the work progresses. The contractor shall furnish all materials, labor and equipment to test for leakage in the system at one and a half (1.5) times working pressure by means of test meters or other means approved by the Engineers. The leakage shall not be greater than the determined by the following formula:

$$L \equiv \frac{S \times D \times (P^{0.5})}{148{,}000}$$

in which L is the allowable leakage in gallons per hour; S equals length of pipeline tested in feet; D equals nominal pipe diameter in inches; and P equals average test pressure in psi. If leakage so measured exceeds the allowable amount the contractor shall at once locate the leaks and make the necessary repairs to bring the leakage within the acceptable limits at no extra cost to the owner. All visible leaks are to be repaired regardless of the amount of leakage.

13. Flushing - Prior to Chlorination, the contractor shall flush the mains to A.W.W.A. Standard C601 until a clear stream is obtained.

14. Chlorination - Chlorination of the water main shall be conducted only after the main has been satisfactorily pressure and leakage tested and flushed and a clean stream is obtained, as determined by the Engineer. The Contractor shall furnish all labor, equipment, materials, and tools necessary to disinfect the pipe and appurtenances in accordance with AWWA Standard for Disinfecting Water Main C651, latest revision. The

continuous feed method shall be performed under the supervision of the Engineer. The Contractor shall thoroughly flush and dechlorinate while flushing the original chlorination of the main to completely remove all the chlorinated water. The Contractor shall coordinate with the City of Essex Junction Wastewater Treatment Facility on the disposal of heavily chlorinated water flushed from the main. The disinfection process shall be deemed acceptable only after two samples of water from the flushed, disinfected main, collected twenty-four (24) hours apart, show no evidence of bacteriological contamination, as determined by the Health Department or other approved lab.

15. Protection of Water Supplies - Water mains shall be laid at least ten (10) feet horizontally from any existing or proposed sanitary sewer. This distance can be reduced to five (5) feet for storm sewers. The distance shall be measured edge of pipe to edge of pipe. Where impractical due to ledge, boulders, or other unusual conditions, to maintain ten (10) foot horizontal separation between water and sewer lines, the water line may be in a separate trench or on an undisturbed earth shelf in the sewer trench provided that the bottom of the water line is at least eighteen (18) inches above the top of the sewer. Wherever impossible or impractical to maintain eighteen (18) inches vertical separation, the sanitary sewer line shall be constructed to normal waterline standards and pressure tested to fifty (50) psi for fifteen (15) minutes prior to backfilling. No leakage shall be allowed for this test.

Sewer crossing water mains shall be laid beneath the water main with at least eighteen (18) inches vertical clearance between the top of the sewer and the bottom of the water main. When it is impossible to maintain the eighteen (18) inches vertical separation or where the sewer must be laid above the water main;

(a) The crossing shall be arranged so that one full length of sewer is centered above or below the water line, with sewer joints as far as possible from water joints;

(b) The sanitary sewer pipe must be constructed to water main standards for minimum distance of twenty (20) feet either side of the crossing or a total of three (3) pipe lengths, whichever is greater;

(c) The section constructed to water main standards must be pressure tested to maintain fifty (50) psi for fifteen (15) minutes without leakage prior to backfilling beyond one (1) foot above the pipe to assure water tightness; and

(d) Where a water main crosses under a sewer, adequate structural support shall be provided for the sewer to prevent damage to the water main.

No water main shall pass through, or come into contact with, any part of a sanitary sewer manhole. There shall be no physical connection between the distribution system and any pipes, pumps, hydrants, or tanks, which are supplied or may be supplied with water that is, or may be, contaminated.

SECTION 113: HYDRANTS

A. All hydrants are to be three-way, five (5) inch minimum diameter and limited to the following makes:

1. Kennedy A.W.W.A K-81
2. Mueller A.W.W.A. Cat. No. A 243
3. Waterous A.W.W.A. Pacer

B. All threads shall be "double start" style and have:

1) Steamer connection: Five (5) inch STORZ Connector

2) Two and half (2½) inch spuds:

(a) Outside diameter of three and one eighth (3.125) inches plus zero (0) to two hundredths (0.02) inches;

(b) Inside diameter of two and a half (2½) inches six (6) threads per inch.

3) There shall be a minimum of twelve (12) inches between the ground and the bottom of the steamer cap.

4) Single family house subdivisions will require not more than three hundred and fifty (350) feet between hydrants, and a minimum water flow of not less than one thousand (1,000) gallons per minute from each hydrant. At least one hydrant shall be located at each intersection.

5) A ten (10) foot by ten (10) foot easement will be required around the hydrant if located on private property. Each hydrant must be a minimum of four (4) feet from the edge of the sidewalk (to the closest point of the hydrant). No structures or planting to be placed within this easement.

6) Color Code:

Gallons/minute	Color on cap of hydrant
more than 1000	green
500-1000	yellow
less than 500	red

The City will test the hydrants and the contractor will paint the CAPS of the hydrant in accordance with the above color code chart. The base of the hydrant shall be painted red for all hydrants by the contractor.

7) Thrust Blocks: Thrust blocks must be installed in accordance with the specifications given in the water system section of these specifications.

8) No private hydrants will be approved.

SECTION 114: SERVICE CONNECTIONS

A. Description. This item shall consist of the installation of individual services from the water main to the meter with the necessary corporations, curb stops, curb boxes, stop and drains, meter spacers with stubs and pipe as indicated on the accepted drawings.

B. Materials:

1. Pipe - Service pipes shall be three quarter (3/4) inch Type "K" Copper Tubing manufactured according to ASTM Specifications B.88-62 or approved equal.
2. Corporation Stops - All corporation stops shall be constructed of brass according to A.W.W.A. Standard C 800 and be three quarter (3/4) inch thread compression corporation stops Mueller Cat. No. H-15000 or equal.
3. Curb Stops - All curb stops shall be constructed of brass according to A.W.W.A. Standard C 800 and be three quarter (3/4) inch inverted key curb stop, Mueller Cat. No. 15200 or equal with compression fittings.
4. Curb Boxes - All curb boxes shall be Extension Type with stationary rod and arch pattern base, Mueller Cat. No. H-10334 or equal with a five (5) foot bury. Curb box couplings and extensions will be the same material as the curb box.
5. Ball Valves - Ball Valves shall be three quarter (3/4) inch.

C. Construction Methods

1. Services – One (1) curb stop and one (1) water meter shall be installed for each individual dwelling unit, condominium unit, apartment unit, commercial, or office occupancy. Exceptions will be permitted in cases where a condominium association signs a binding agreement to be responsible for all collections of water bills. In cases where condominiums are converted into separate apartments, separate curb stops and water meters shall be installed for each unit. All water meters shall be purchased through the City Water Department and shall be installed by City employees. The contractor shall make all necessary taps into the water main and for each lot, install an approved brass corporation stop, connect the three quarter (3/4) inch type "K" copper service pipe to the compression which pipe shall be connected to the three quarter (3/4) inch type Brass Curb Stop with inlet and outlet for three quarter (3/4) inch type "K" copper service pipe. Such curb stop shall be installed within the strip of Right-of-way between the sidewalk and property line. Curb stops must be located within the public Right-of-way or within a Right-of-way granted to the City of Essex Junction for access. The corporation stop shall be left open, and the curb stop closed. Such curb stop shall be located not less than five (5) feet below the ground surface and shall be accessible from the surface through an approved valve box.
2. Service Connections - The service connections shall be made by installing three quarter (3/4) inch type "K" copper pipe, or approved equal, on the end of the approved brass curb stop and proceeding through the cellar wall to an approved three quarter (3/4) inch ball valve on each side of the meter. Meter space shall be provided between the ball valve. All service connections must be installed to the curb stop for all lots in a subdivision before the streets are paved.

SECTION 115: SANITARY SEWER SPECIFICATIONS.

Sewer Mains Polyvinyl Chloride (PVC)

A. Description. This item shall consist of the excavation and backfilling required for the complete construction of gravity sewers which shall include manholes, service connections and all other appurtenances necessary for a complete Sanitary Sewer System as indicated on the accepted drawings.

B. Installation. All pipe fittings shall be installed in accordance with Specifications herein, the Contract Drawings and the manufacturer's recommendations. Both ends of all new sewer lines must be closed (capped) during construction to prevent the entry of earth into the sewer system.

C. Materials:

1. Pipes - For gravity sewers a minimum pipe diameter of eight (8) inches shall be used. Polyvinyl Chloride (PVC) shall meet ASTM Specification D 3034-SDR 35. The nominal laying length of the pipe shall be twenty (20) feet or twelve and a half (12.5) feet.
2. Joints - The pipes and fittings shall be joined with flexible elastomeric seals meeting the requirements of ASTM D-3212.
3. Manholes - Pre-cast Reinforced Concrete manholes shall be furnished with reinforced copolymer polypropylene ladder rungs, with a five (5) inch wall thickness, and minimum inside diameter of four (4) feet of all barrel sections, and with a wall thickness varying from five (5) inches at the bottom to eight (8) inches at the top of all cone sections.
4. Bedding Material - All sewer pipe shall be laid on a six (6) inch layer of three quarter (¾) inch crushed stone so that one hundred (100) percent will pass a three quarter (¾) inch square opening sieve and eighty (80) to one hundred (100) percent will be retained in a No. 4 sieve.
5. Manhole Frame and Cover - Manhole frames and covers shall be of the form and dimensions shown on the accepted drawings and shall be machined to provide a good tight non-rocking fit and have a minimum weight of four hundred (400) pounds. The cover pattern shall be a diamond pattern with lift holes around the perimeter. These frames and covers shall be the same as those manufactured by C.E. Maguire by LeBaron Foundry - Catalog LC266, Wt. 400#, LC268-1 Self Sealing Frame and Cover, or an approved equal.

D. Construction Methods

1. Excavations - Excavations shall be made to a point at least six (6) inches below the pipe invert to accommodate the bedding material. All excavations are to be kept dry while pipe is being laid and until each joint and pipe has been inspected by the Engineer and approval given to commence backfilling operations.

2. Laying Sewer Pipe - The bell end of the pipe shall face upgrade at all times and be placed in such a position as to make the invert even when the next pipe section is inserted. Where required by adverse grading conditions, the contractor shall fill any gully to make a suitable bedding for the sewer pipe. The fill shall be compacted to a ninety-five (95) percent Standard proctor density upon which the six (6) inches of bedding material shall be placed. Any pipe which is not laid to grade and alignment shall be re-laid to the satisfaction of the engineer. The bedding material shall be placed and compacted on each side of the pipe to a height six (6) inches above the pipe and for the full width of the excavated trench or as shown on the accepted plans.

3. Backfill - Backfill shall consist of approved material placed in six (6) inch layers with each layer being thoroughly compacted to a density of 95% of the maximum dry density using the Standard Proctor Test, according to ASTM D698. Debris, frozen material, large clods or stones, organic matter, or other unstable materials shall not be used for backfill. No stones in excess of one and one half (1.5) inch diameter shall be placed within two (2) feet of the outside of the pipe. Particular precautions shall be taken in placement and compaction of the backfill material in order not to damage and/or break the pipe. The backfill shall be brought up evenly on both sides of the pipe for its full length. Walking or working on the completed pipeline except as may be necessary in tamping or backfilling, shall not be permitted until the trench has been backfilled to a height of at least two (2) feet over the top of the pipe. During construction all openings to the pipe lines shall be protected from contamination by earth or other materials.

4. Manholes - Manholes shall be installed at the end of each line, at all changes in grade, size or alignment of pipe, at all pipe intersections, and at distances not greater than three hundred (300) feet. Pre-cast Reinforced Concrete Manholes shall have the top section set at a grade that will place the riser a minimum of three (3) inches and a maximum of twelve (12) inches from the top of the pre-cast manhole cone. Adjustments shall be made using pre-cast concrete riser rings, expanded polypropylene riser rings, or cast-in-place concrete. Bricks shall not be used. All joints shall be grooved type and shall be fully bedded with mastic seal when setting sections. Lifting holes in all manhole sections shall be filled solid with mortar. No cracked, damaged or defective sections will be allowed in the work. Inlet and outlet pipes shall be joined to the manhole with a rubber-gasketed flexible watertight connection that allows differential settlement of the pipe and manhole wall to take place. If the elevation difference of pipe inverts is twenty-four (24) inches or more, a drop manhole shall be provided. Drop manholes shall have an external drop encased in concrete or an internal drop using a drop bowl. If an internal drop is used, the manhole inside diameter shall be increased to a minimum of five (5) feet.

5. Inverts - Inverts may be constructed of red hard burned brick set on edge, or pre-cast concrete.

6. Leakage and Testing - If inspection of the completed sewer or any part thereof shows any pipe, manhole, or joint which allows infiltration of water, the defective work, or material, shall be replaced or repaired as directed by the Engineer. After the sewer

has been completed, the contractor shall furnish all labor and materials necessary, and in general, assist the Engineer to conduct such leakage tests at such times and at such locations as the Engineer deems necessary.

(a) Air Testing Procedures:

(i) Plug all openings in the test section.

(ii) Add air until the internal pressure of the line is raised to approximately four (4.0) pounds/square inch (psi) greater than the average pressure of any ground water. After this pressure is reached, allow the pressure to stabilize. The pressure will normally drop as the air temperature stabilizes. This usually takes two (2) to five (5) minutes depending on the pipe size. The pressure may be reduced to three and one half (3.5) psi before starting the test.

(iii) When the pressure has stabilized and is at or above the starting test pressure of three and one half (3.5) psi above maximum groundwater pressure, start the test. If the pressure drops more than one (1.0) psi during the test time, the line is presumed to have failed the test. If a one (1.0) psi drop does not occur within the test time, the line has passed the test.

(b) Test Time:

(i) The following table shows the required test time, T, in minutes per one hundred (100) feet of pipe for each nominal pipe size. Test times are for a one (1.0) psi pressure drop from three and one half (3.5) to two and one half (2.5) psi.

(ii) If the section of line to be tested includes more than one pipe size, calculate the test time for each size and add the test times to arrive at the total test time for the section.

(iii) It is not necessary to hold the test for the whole period when it is clearly evident that the rate of air loss is less than the allowable.

MINIMUM TEST TIME FOR VARIOUS PIPE SIZES

Nominal Pipe Size (Inches)	T (time) min/100 feet	Nominal Pipe Size (Inches)	T (time) min/100ft
3	0.2	21	3.0
4	0.3	24	3.6
6	0.7	27	4.2
8	1.2	30	4.8
10	1.5	33	5.4

Nominal Pipe Size (Inches)	T (time) min/100 feet
12	1.8
15	2.1
18	2.4

Nominal Pipe Size (Inches)	T (time) min/100ft
36	6.0
39	6.6
42	7.3

(c) Manholes - All manholes shall be tested for leakage. Manholes shall be tested for leakage in accordance with one of the following:

(i) Water Test - After the manhole has been assembled in place, all lifting holes and exterior joints shall be filled and pointed with an approved non-shrinking mortar. All pipes and other openings into the manhole shall be suitably plugged and the plugs placed to prevent blowout.

(ii) Each manhole shall be checked for exfiltration by filling with water to the top of the cone section. A stabilization period of one (1) hour shall be provided to allow for absorption. At the end of this period, the manhole shall be refilled to the top of the cone, if necessary, and the measuring time of at least six (6) hours begun. At the end of the test period, the manhole shall be refilled to the top of the cone measuring the volume of water added. This amount shall be converted to a twenty-four (24) hour rate and the leakage determined on the basis of depth. The leakage for each manhole shall not exceed one (1) gallon per vertical foot for a twenty-four (24) hour period for exfiltration and there shall be no visible infiltration.

(d) Vacuum Test - Vacuum testing of manholes shall also be considered acceptable using the following guidelines: The test shall be done after assembly of the manhole. The manhole to pipe connection shall be flexible. A sixty (60) inch/lb. Torque wrench shall be used to tighten the external clamps. All lift holes shall be plugged with a non-shrink mortar, as approved by the Engineer. The seal between manhole sections shall be approved, preformed flexible mastic per ASTM C923. The completed manhole shall not be backfilled prior to testing. Manholes which have been backfilled shall be excavated to expose the entire exterior prior to vacuum testing or the manhole shall be tested for leakage by means of a hydrostatic test. Interior piping and plugs shall be adequately braced to prevent movement. A vacuum of ten (10) inches of Hg shall be drawn within the manhole. The manhole shall pass the test if the vacuum remains between ten (10) inches Hg and nine (9) inches Hg for at least two (2) minutes.

7. Deflection Testing – Deflection tests shall be performed on all flexible pipe after the final backfill has been in place for at least thirty (30) days. The deflection test shall

be run using a rigid ball or mandrel having a diameter equal to ninety-five (95) percent of the inside diameter of the pipe. No mechanical pulling devices shall be used during the deflection tests. All pipe not meeting the deflection test shall be re-excavated and replaced at the Contractor's expense.

SECTION 116: SERVICE CONNECTIONS

A. Description. This item shall consist of the installation of individual services from the sewer main to the property line as shown on the accepted drawings. There shall be Sanitary Sewer Service installed for each lot as shown on the Plan. All sewer services must be installed beyond the R.O.W. for all lots in a subdivision before the streets are paved, and before the leakage test on the sewer main is performed.

B. Materials:

1. Pipes - Sanitary sewer services shall have a minimum pipe diameter of four (4) inches and made of the same material as the main sanitary sewer system. All pipe and joints shall meet the specifications set forth for the sewer mains.
2. Bedding Material - All sewer services shall be laid on a six (6) inch layer of three quarter (¾) inch crushed stone.
3. Any tap into existing sewer main shall utilize a new "wye" fitting connected to the existing main with rigid, gasketed couplings. Saddle type connectors shall not be used.

C. Construction Methods

1. Excavation - Same as for sewer main.
2. Laying Sewer Pipe - Same as for sewer main.
3. Backfill - Same as for sewer main.
4. Markers - The end of the service shall be plugged, as recommended by the pipe manufacturer, and marked with a two (2) inch PVC Pipe with both ends capped, which shall extend above the surface of the ground. The bottom of the two (2) inch pipe shall be left at the elevation of the service invert.
5. Leakage and Testing - In conjunction with sewer mains.
6. Seasonal Limits - Same as for sewer mains.

SECTION 117: STORM SEWER SPECIFICATIONS - STORM DRAINS

A. Description. This item shall consist of catch basins, manholes, pipe and drainage outlets meeting the specifications for the diameter of pipe required and installed as indicated on the accepted drawings.

B. Materials:

1. Pipe Specifications:

(a) Polyvinyl chloride pipe:

PVC pipe shall conform in all respects to the latest revision of ASTM specification D3034 or F679 or F794, Type PSM, HDPE ADS N-12 (or equivalent) or PS Polyvinyl Chloride (PVC) Sewer Pipe and Fittings, SDR 35 or Perma-Loc Series 46. Wall thickness of all PVC pipe shall meet ASTM Specifications for SDR 35 or Perma-Loc Series 46 pipe. All pipe and fittings shall be clearly marked as follows:

Manufacturer's Name and Trademark
Nominal pipe size
Material Designation 12454C PVC
Legend "Type PSM SDR 35 PVC Sewer Pipe" or "PS 46 PVC Sewer Pipe"
Designation ASTM D3034, F794 or F679

Joints shall be push-on type using elastic gaskets, and shall conform to ASTM D3212. The gaskets shall be factory installed. The pipe shall be furnished in nominal thirteen (13) foot lengths. Sufficient numbers of short lengths and fully machined fittings shall be provided for use at manholes, chimneys, and connections. All connections will require the use of manufactured fittings. Field fabricated saddle type connections will not be considered acceptable.

Any pipe or fitting having a crack, or other defect, or which has received a severe blow shall be marked rejected and removed at once from the work site.

All field cuts are to be made with a saw, at ninety (90) degrees to the pipe centerline. The cut end is to be beveled to the same angle as the factory bevel and all interior burrs are to be removed. A homing mark will be placed on all pipes prior to assembly.

The pipe installed under this specification shall be installed so that the deflection shall be less than five (5) percent as measured a minimum of thirty (30) days after installation.
The Contractor will submit certification that the materials of construction have been sampled, tested, inspected and meet all the requirements including wall thickness in accordance with ASTM D3034 for all pipe and fittings to be included in the project work.

PVC pipe shall not be installed when the temperature drops below thirty-two (32) degrees Fahrenheit or goes above one hundred (100) degrees Fahrenheit. During cold weather, the flexibility and impact resistance of PVC pipe is reduced. Extra care is required when handling PVC pipe during cold weather.

(b) Smooth Interior and Annular Exterior Corrugated High Density Polyethylene (HDPE) Pipe:

This specification describes four (4) to sixty (60) inch (one hundred (100) to one thousand five hundred (1500) millimeters) Smooth Interior and Annular Exterior Corrugated High Density Polyethylene (HDPE) Pipe with a Silt Tight and Leak Resistant Joint for use in nonpressure gravity flow drainage applications.

(i) AASHTO M252: Standard Specification for Corrugated Polyethylene Pipe, four (4) inches to ten (10) inches (one hundred (100) to two hundred and fifty (250) millitmeters), Type S.

(ii) AASHTO M294: Standard Specification for Corrugated Polyethylene Pipe, twelve (12) inches to forty-eight (48) inches (three hundred (300) to one thousand two hundred (1200) millimeters), Type S.

(iii) AASHTO MP7-97: Standard Specification for Corrugated Polyethylene Pipe, fifty-four (54) inches to sixty (60) inches (one thousand three hundred and fifty (1350) to one thousand five hundred (1500) millimeters), Type S.

(iv) ASTM D2321: Standard Practice for Underground Installation of Thermoplastic Pipe for Sewers and Other Gravity-Flow Applications.

(v) ASTM D3350: Standard Specification for Polyethylene Plastic Pipe and Fittings Materials.

(vi) ASTM F477: Standard Specification for Elastomeric Seals (Gaskets) for Joining Plastic Pipe.

(vii) Pipe and fitting material shall be high-density polyethylene meeting ASTM D3350 minimum cell classification 324420C for four (4) through ten (10) inch diameters or 335420C for twelve (12) through sixty (60) inch diameters.

(viii) Pipe manufactured for this specification shall comply with the requirements for test methods, dimensions, and markings found in AASHTO M252, AASHTO M294 and/or AASHTO MP7-97. The prescribed sizes of pipe are nominal inside diameters. Pipe sizes shall be no less than ninety-nine (99) percent of nominal inside diameter and have a minimum of twenty (20.0) feet laying length.

(ix) For four (4) to ten (10) inch (one hundred (100) to two hundred and fifty (250) millimeter) diameters, the pipe supplied shall be smooth Interior and Annular Exterior Corrugated High Density Polyethylene (HDPE) Pipe meeting the requirements of AASHTO M252, Type S. (x) For twelve (12) to forty-eight (48) inch (three hundred (300) to one thousand two hundred (1200) millimeter) diameters, the pipe supplied shall be smooth Interior and Annular Exterior Corrugated High Density Polyethylene (HDPE) Pipe meeting the requirements of AASHTO M294, Type S.

(xi) For fifty-four (54) to sixty (60) inch (one thousand three hundred and fifty (1350) to one thousand five hundred (1500) millimeter) diameters, the pipe supplied shall be smooth Interior and Annular Exterior Corrugated High Density Polyethylene (HDPE) Pipe meeting the

requirements of AASHTO MP7-97, Type S.
(xii) Manning's "n" value for use in design shall not be less than one hundredth (0.010).
(xiii) Fittings shall conform to AASHTO M252, M294 or MP7-97. Fabricated fittings shall be welded on the interior and exterior at all junctions.
(xiv) Pipe shall be joined with bell-and-spigot joints meeting AASHTO M252, M294 or MP7-97. Joints shall provide silt tight and leak resistant joint.
(xv) Pipe joints shall incorporate a gasket meeting the requirements of ASTM F477 to form silt tight and leak resistant connection. Joints shall exceed the soil tight joint performance criteria of AASHTO Standard Specifications for Highway Bridges, Division II, Section 26.
(xvi) Gaskets shall be installed by the pipe manufacturer and covered with a removable wrap to ensure the gasket is free from debris.
(xvii) A joint lubricant supplied by the manufacturer shall be used on the gasket and bell during assembly.
(xviii) Smooth Interior and Annular Exterior Corrugated HDPE Pipe shall be Sure-Lok F477 as manufactured by Hancor, Inc. or a pre-approved equal. All alternate products must be submitted to the City Engineer two weeks before bid date for approval.
(xix) Minimum depth of burial shall be as per manufacturing recommendation for the diameter specified.

2. Catch Basins or Manholes: A pre-cast (or cast in place) concrete catch basin or manhole shall be installed at the end of each line, at all changes in grade, size or alignment of pipe, at all pipe intersections, and at distances not greater than three hundred (300) feet.

(a) Catch Basins - The catch basins shall conform to requirements for precast risers and base sections found in ASTM C913, latest edition. The cast iron frame and grate shall be Type D LeBaron #LF 248-2, or equal with a minimum weight of four hundred and eighty (480) pounds. For steep grades, a Type E LeBaron #LK 120A, or equal may be supplemented with a minimum weight of four hundred and thirty (430) pounds. There shall be either a manhole or a catch basin every three hundred (300) feet on normal slopes to allow for proper cleaning of the lines.
(b) Manholes - The manholes and manhole frames and covers shall conform to the specifications as set forth under Sanitary Sewer Specifications.
(c) Booted connections shall be used for thirty-six (36) inch pipe and smaller.

C. Construction Methods

1. Pipeline Trenches - The trenches and other excavations shall be of sufficient width and depth at all points to allow all pipes to be laid, joints to be formed and

structures and appurtenant construction to be built in the most thorough and workmanlike manner and to allow for sheeting and shoring, pumping and draining and for removing and replacing unsuitable material. Trenches and excavations shall be at least twelve inches wider than the outside dimensions of the structure they are to contain; trenches must not be unnecessarily wide so as to materially increase load on the pipe resulting from backfill. Bottoms of trenches and other excavations shall be carried to lines and shapes satisfactory to the Engineer. Bottoms of trenches for pipe shall be carried to a depth six inches greater than grade of pipeline, refilled to grade and bedded in the specified bedding method as detailed on the Detail Plans.

Wherever boulders or ledge rock are encountered in excavations for pipelines or structures, such boulders or ledge rock shall be removed to a depth of six inches below grade and space occupied by them shall be refilled to grade with the specified bedding material. Trenches shall be opened at such times and to such extent only as may be permitted by the Engineer. All driveways, crosswalks, sod, shrubs, trees and any other surface material affected by the work shall be carefully taken up and kept separate from the other excavated material. If suitable, excavated material shall be used for embankments, backfill and fill. Side slopes of excavations shall be less than the angle of repose of material excavated and shall be flat enough to prevent slides or cave-ins. Any excavation required as a result of slides or cave-ins shall be done by the Contractor at his own expense.

Placement of bedding material shall not be done until the ground has been thoroughly dewatered and the Contractor is ready to install pipe or to construct foundations of various structures.

The total running length of trench allowed to be open shall be kept as short as is practical. Only that length of trench which can be protected by means of barricades, fences, and the like shall be allowed to remain open overnight. All trench excavations shall be backfilled prior to work shutdown for each weekend.

2. Pipe Laying - Storm drains and culverts shall be constructed on a trench bottom prepared and bedded as shown on the Detail Plans. Each pipe shall be checked just prior to laying to ensure that it is clear of all dirt and debris and shall be laid true to line and grade. All joints shall be tight, and inverts shall be continuous. When pipe is to be laid within the State Highway Right-of-way it shall also be installed in accordance with requirements of Section 601 of the Vermont Highway Department Specifications. Metal pipe shall be firmly joined with coupling bands, concrete and PVC and HDPE pipe joints shall be rubber gasket type. PVC and HDPE pipe shall be bedded from the trench bottom, six (6) inches below the invert of the pipe, to six (6) inches above the crown of the pipe with approved granular pipe bedding.

3. Backfilling Trenches - Frozen material shall not be placed in backfills and backfills shall not be placed on frozen material. No stones in excess of three (3) inches diameter shall be placed within two (2) feet of the pipe. Larger stones may be used in the backfill

provided care is taken that stones do not become nested and that all voids between stones are completely filled with fine materials. The size and quantities of stone used in backfill will be subject to approval by the Engineer. No backfill shall be dropped from a height of more than three (3) feet from the top of the pipe.

The backfill shall consist of two separate zones:

(a) The first zone shall extend from the top of the bedding material to a height of twenty-four (24) inches above the crown of the pipe. Select excavated material with stones no larger than three (3) inch diameter shall be placed in six (6) inch lifts and compacted to a density of ninety-five (95) percent of the maximum dry density using the Standard Proctor Test, according to ASTM D698 or AASHTO T99 (latest version). The materials shall be placed carefully so as not to disturb the pipe or cause it to break or misalign.

(b) The second zone shall extend from the top of the first zone to within four (4) inches of finished grade or to road subgrade. Material in this zone shall be select excavated material, placed in six (6) inch lifts and compacted to a density of ninety five (95) percent of maximum dry density using the Standard Proctor Test, according to ASTM D698 or AASHTO T99 (latest version). Suitable cohesive soil can be backfilled in this zone and compacted using impact type equipment, pneumatic tampers, engine or self-propelled, sheepsfoot rollers on wide trenches or other suitable equipment, providing the ninety-five (95) percent compaction requirement is met. In cohesionless soils, vibratory plates in confined areas and vibratory rollers in unconfined areas can be utilized, providing the specified degree of compaction is met. Granular cohesionless material may, in some cases and upon approval of the Engineer, be compacted using water jetting or immersion type vibrators with flooding and pooling.

4. Installing Catch Basins and Manholes - All construction of sewer manholes must be carried out to ensure watertight work. Any leaks in manholes shall be completely repaired to the satisfaction of the City Engineer or the entire structure shall be removed and rebuilt. All manhole lift holes shall be grouted inside and out with expandable grout. The pipe opening in the precast manhole riser shall have a cast-in-place flexible gasket or an equivalent system for pipe installation, as approved by the City Engineer. Joints between manhole risers shall be soft butyl joint sealer (rope form). Joints between pipes and catch basin base sections shall be sealed with boots for pipes thirty-six (36) inch diameter or smaller and with cement mortar for pipes larger than thirty-six (36) inch diameter, smoothed on the inside and built up with a heavy bed of excess mortar on the outside. Frames shall be brought to grade with precast concrete riser rings, expanded polypropylene riser rings, or cast-in-place concrete, and shall be set in a full bed of mortar. In roadways, the frames shall be set to final grade only after the base course paving has been completed.

5. Drainage outlets - Drainage outlets of the stormwater system being conveyed to the City along roadways must comply with the Vermont General Permit 3-9040 for Stormwater Discharges from Municipal Roads requirements and specifications.

SECTION 118: RESTRICTIONS AND CONDITIONS OF RIGHT-OF-WAY

All work relating to the City of Essex Junction Rights-of-way shall be approved by an authorized official before any construction commences.

A. Laying of Pipes, Conduits:

1. After any pipes, conduits, drains or other underground structures are laid, or any excavation is made in the roadway, the trenches or openings shall be properly backfilled with suitable material; the backfill shall be thoroughly tamped, and the surface of the road over said structures shall be left even with the adjoining ground. If the work is done in cold weather, no frozen material shall be used for backfilling.
2. Whenever the hardened surface of the roadway, gutters or any part of the surface of the highway is disturbed it shall be replaced in as good condition as before it was disturbed, and if new materials are required, they shall correspond with those already in place on the road.
3. Where service pipes are to cross the highway, the connections shall be made without disturbing the hardened surface of the roadway, fabric or underdrain, by driving the pipes under the roadway, or the service pipes shall be carried under and across the road in a large pipe, unless otherwise ordered by the Engineer.
4. All repairs to City facilities within the Right-of-way will be provided with a one (1) year warranty.

B. Poles, Wires, Overhead Structures, and Cutting and Trimming of Trees:

1. No trees, fences, phone booths, or other structures shall be erected in the Right-of-way unless authorized by the City. All mailboxes, telephone, and electric utility boxes shall be located at least three (3) feet outside the edge of the sidewalk. All above ground utility boxes shall be landscaped with evergreen shrubs that will not exceed the height of the utility box by more than one (1) foot when mature.
2. No structure except for the streetlights shall be erected in the Right-of-way within fifty (50) feet of an intersection. This includes above ground utility boxes.

C. General Conditions:

1. During the progress of the work all structures underground and above ground shall be properly protected from damage or injury; such barrier shall be erected and maintained as may be necessary for the protection of the traveling public; the same shall be properly lighted at night; and the party or parties shall be responsible for all damages to persons or property due to or resulting from any work done.
2. All utilities in new subdivisions shall be underground, including electric, cable TV, telephone, and other wires. All utilities, including gas and electric, shall be installed in the Right-of-way prior to the installation of underdrain, fabric, sub-base or paving of the street.

D. Street Lights. Streetlights shall be located as specified in Section 704 of this Code.

SECTION 119: INSPECTION

These inspections shall be required of the Developer and work shall not proceed until each check has been made with work reviewed by the City Engineer. The developer pays for the cost of all of these inspections.

A. Streets, Curbs and Sidewalks:

q) Stake out
r) Completion of subgrade
s) Completion of base courses

8. Completion of Surface

Storm Drainage Systems:

a) Stake out
b) Pipe laid - prior to any backfilling
c) Connections to structures
d) Completion of backfill to within two (2) feet of subgrade
e) Completion of backfilling

9. Sewer System:

a) Stake out
b) Pipe laid - prior to any backfill
c) Connections to structure or piping
d) Completion of backfill to with two (2) feet of subgrade
e) Completion of backfilling
f) Lamping of pipe runs
g) Testing
h) Mandrel testing
i) Initial operation
j) Completion of appurtenances

10. Water Mains

a) Stake out
b) Connection to existing mains
c) Pipe laid and thrust blocks cast - prior to any backfill
d) Completion of backfill to within two (2) feet of subgrade
e) Completion of backfilling
f) Pressure and leakage tests
g) Disinfection
h) Initial operation
i) Completion of appurtenances

SECTION 120: FINAL INSPECTION CHECK LIST

A. Streets, Curbs, and Sidewalks:

j) Settlement, depression or imperfections in finish surface
k) All required monuments and front boundary line markers installed.
l) Seeding and erosion control on cut and fill slopes
m) Surface drainage (during rainstorm)
n) General appearance
o) Material testing results, lab reports and record drawings complete and on file

11. Storm Drainage Systems:

a) Catch basins, manholes and pipe lines clean
b) Ditches and outlets clean
c) Erosion control measures completed
d) General appearance
e) Material testing results, lab reports, manufacturer's certificates, and record drawings complete and on file

12. Sewer System:

a) Manholes, pipe lines and appurtenances clean
b) Inverts and shelves completed to plans with smooth transitions
c) Manhole frames and covers set at proper elevation
d) General appearance
e) Material testing results, lab reports, manufacturer's certificate, leakage test results for pipe and manholes, and mandrel deflection tests complete and on file

13. Water System:

a) Valves, hydrants and curb stops operating properly
b) Valve box covers and curb boxes set at proper elevations
c) General appearance
d) Tie information and record drawing complete
e) Material testing results, lab reports, manufacturer's certificates, pressures and leakage test results and disinfection test results are complete and on file

14. As-built Plans:

One set of mylars and two paper copies of plans showing all as-built utilities, and water and sewer house connections must be submitted to the City Engineer by the developer in accordance with Chapter 9. In addition, the developer shall provide to the City the record drawings in an AutoCAD™ compatible electronic format; as well as a complete set of the record drawings in PDF format.

SECTION 121: VARIATIONS AND WAIVERS

Requests for waivers of any provisions of this Chapter, or for approval of variations to those provisions, shall be submitted to the City Engineer in writing, along with technical information supporting the request. The City Engineer must approve, modify, or deny such requests, and all decisions by the City Engineer shall be in writing.

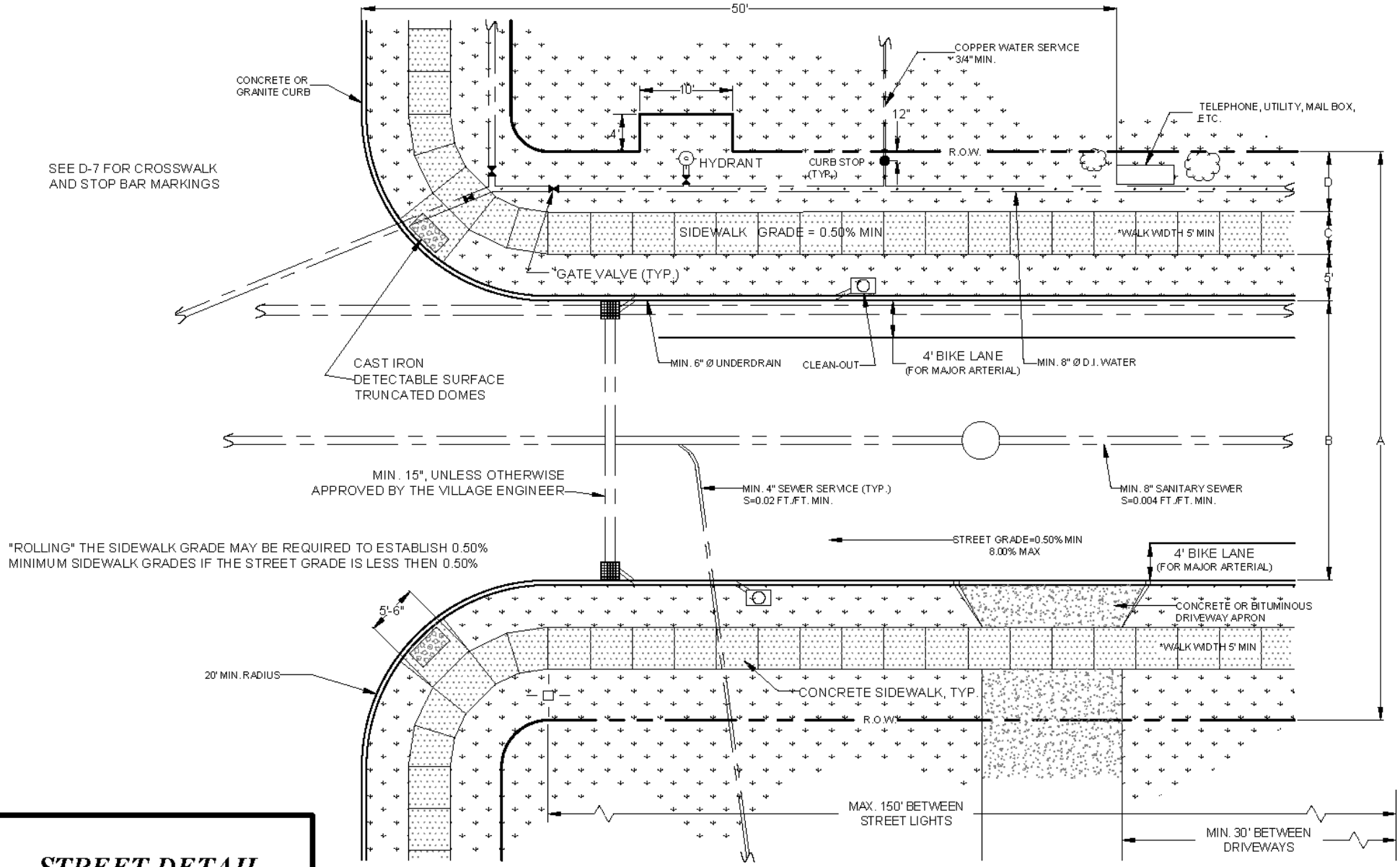

STREET DETAIL

NOT TO SCALE

TYPICAL PLAN

	A	B	C	D
MAJOR ARTERIAL	60'	32'	5'	4'
LOCAL RESIDENTIAL STREET	50'	28'	5'	1'

	A	B	C	D
MAJOR ARTERIAL	60'	16'	5'	4'
LOCAL RESIDENTIAL STREET	50'	14'	5'	1'

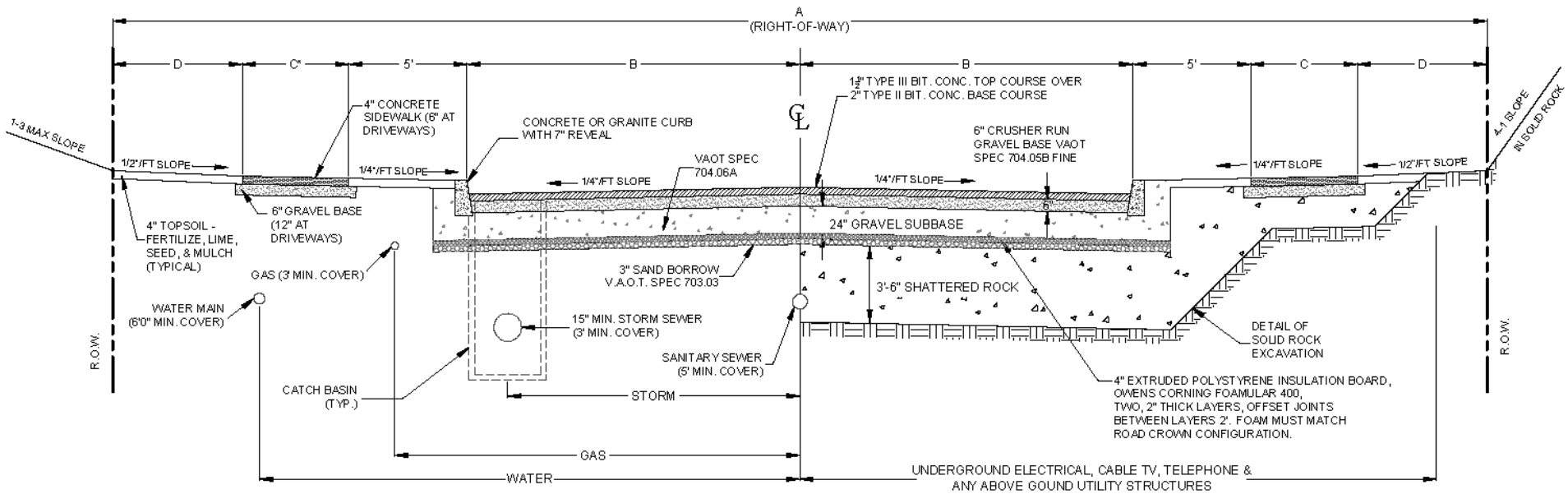

1. MINIMUM SLOPE OF DRAINAGE PIPES SHALL BE 0.2%.
2. ALL MATERIAL AND CONSTRUCTION SHALL BE IN ACCORDANCE WITH CITY OF ESSEX JUNCTION PUBLIC WORKS SPECIFICATIONS.
3. MATCH EXISTING SLOPES AT PROPERTY LINES. MAXIMUM SLOPE 1 VERTICAL/3 HORIZONTAL.
4. SOME AREAS MAY REQUIRE WALKS OF GREATER WIDTH AT THE DISCRETION OF THE CITY.
5. SOIL BORINGS AND TEST PITS MAY BE REQUIRED BY THE CITY TO VERIFY PROPOSED DESIGN.
6. YELLOW OR ORANGE WARNING TAPE SHALL BE BURIED 15" ABOVE ALL GAS AND ELECTRIC LINES.
7. 26' MINIMUM WIDTH OF PAVEMENT MAY BE APPROVED BY THE CITY FOR STREETS SERVING SINGLE FAMILY UNITS IF THE DESIGN AVERAGE DAILY TRAFFIC (ADT) IS LESS THAN 250 VEHICLES.

INSULATION REQUIREMENTS:
INSULATION SHALL BE OWENS CORNING RIGID FOAM INSULATION: FOAMULAR 400. INSULATION SHALL BE 2" THICK, SUPPLIED IN 2'X 8' PIECES WITH SQUARE EDGES. COMPRESSIVE STRENGTH SHALL BE A MINIMUM OF 40 POUNDS PER SQUARE INCH.

INSULATION INSTALLATION: THE CONTRACTOR MUST PREPARE THE SAND BED SO THAT ALL PROJECTIONS THAT INTERFERE WITH PLACEMENT OF INSULATION BOARDS ARE TO BE REMOVED, FORMED TO FIT AROUND OR AS SPECIFIED BY THE ENGINEER. THE CONTRACTOR MAY NOT MOVE EQUIPMENT ONTO FOAM UNTIL THE FIRST 12" (MINIMUM) OF GRAVEL HAS BEEN PLACED.

STREET DETAIL

NOT TO SCALE

TYPICAL SECTION WITH FOAM INSULATION

	A	B	C	D
MAJOR ARTERIAL	60'	16'	5'	4'
LOCAL RESIDENTIAL STREET	50'	14'	5'	1'

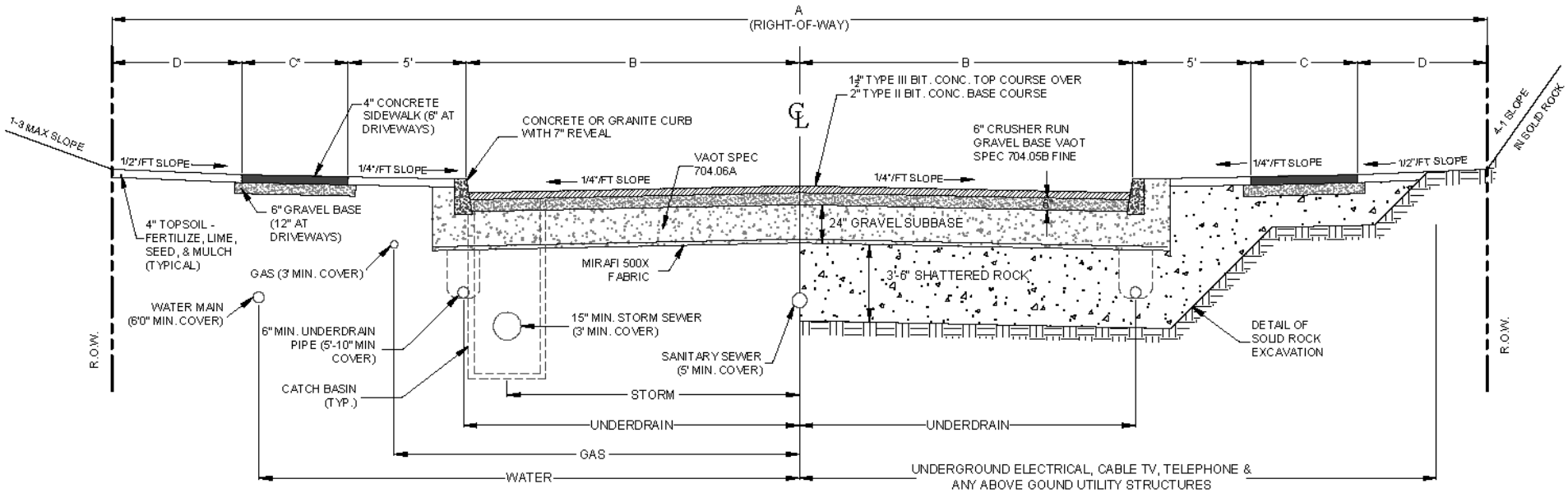

1. MINIMUM SLOPE OF DRAINAGE PIPES SHALL BE 0.2%.
2. ALL MATERIAL AND CONSTRUCTION SHALL BE IN ACCORDANCE WITH CITY OF ESSEX JUNCTION PUBLIC WORKS SPECIFICATIONS.
3. MATCH EXISTING SLOPES AT PROPERTY LINES. MAXIMUM SLOPE 1 VERTICAL/3 HORIZONTAL.
4. SOME AREAS MAY REQUIRE WALKS OF GREATER WIDTH AT THE DISCRETION OF THE CITY.
5. SOIL BORINGS AND TEST PITS MAY BE REQUIRED BY THE CITY TO VERIFY PROPOSED DESIGN.
6. MIRAFI 500X FABRIC OR APPROVED EQUAL SHALL BE INSTALLED UNDER GRAVEL SUBBASE COURSE BENEATH THE STREET, CURB AND SIDEWALK UNLESS OTHERWISE APPROVED BY CITY.
7. YELLOW OR ORANGE WARNING TAPE SHALL BE BURIED 15" ABOVE ALL GAS AND ELECTRIC LINES.
8. 26' MINIMUM WIDTH OF PAVEMENT MAY BE APPROVED BY THE CITY FOR STREETS SERVING SINGLE FAMILY UNITS IF THE DESIGN AVERAGE DAILY TRAFFIC (ADT) IS LESS THAN 250 VEHICLES.

STREET DETAIL

NOT TO SCALE

TYPICAL SECTION

NOTE:
THIS SECTION MUST BE PRE-APPROVED BY WRITTEN AUTHORIZATION OF THE CITY PRIOR TO USE. THE SECTION INDICATED ON SHEET D-2 IS THE PREFERRED SECTION.

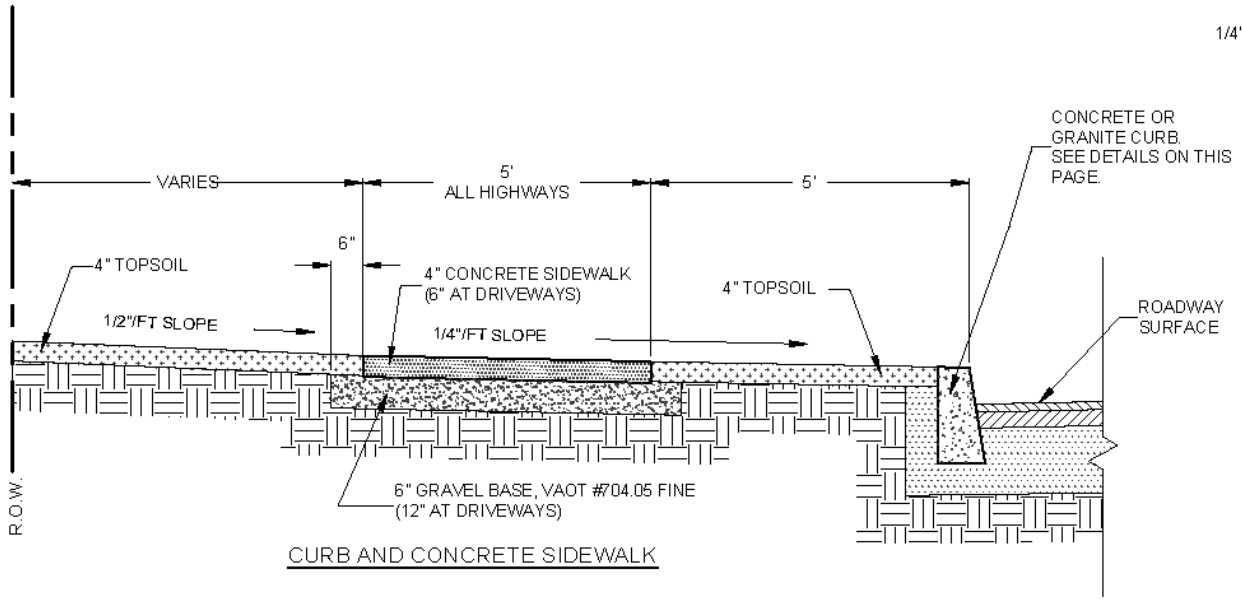

CURB AND CONCRETE SIDEWALK

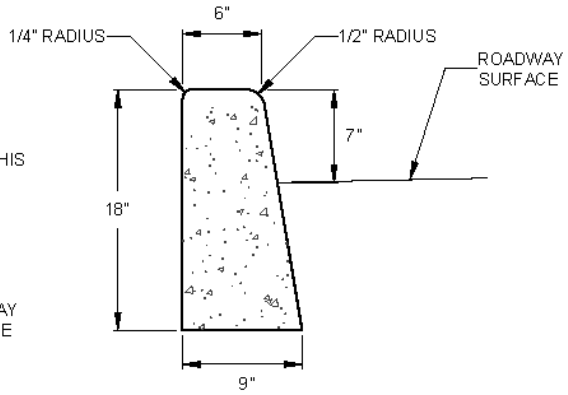

END AREA OF 0.94 SQ. FEET

TYPICAL CONCRETE CURB

1. ALL CURB RADII LESS THEN 200' SHALL BE FORMED USING FLEXIBLE FORMS.
2. CURB REVEAL AT DRIVEWAYS SHALL BE 1" MAX. AND 1/4" MAX. AT HANDICAP ACCESS RAMPS.
3. CURBING SHALL BE CONSTRUCTED IN 10 FOOT SECTIONS WITH 1/8" JOINTS BETWEEN SECTIONS.
4. SIDEWALK SHALL BE CAST IN 100' SECTIONS WITH NO EXPANSION JOINTS. CONNECTION TO EXISTING SIDEWALK AND BETWEEN 100 FOOT SECTIONS SHALL BE ACCOMPLISHED WITH STEEL DOWELS, SPACED 12" ON CENTER. SIDEWALK ADJACENT TO CURB SHALL BE SEPARATED BY 4 MIL POLYETHYLENE. SIDEWALK JOINTS SHALL BE SAW CUT AT 5' INTERVALS TO 1/3 THE SIDEWALK DEPTH. STRUCK TRANSVERSE FALSE JOINTS SHALL NOT BE UTILIZED.
5. ALL MATERIALS AND CONSTRUCTION TO BE ACCORDING TO SPECIFICATIONS.
6. SOME AREAS REQUIRE WALKS OF GREATER WIDTH OF THE DISCRETION OF THE CITY.
7. CONCRETE WALKS SHALL BE 6" THICKNESS ACROSS DRIVES.
8. CONCRETE FOR CURB AND SIDEWALK SHALL BE 4,000 PSI.
9. ALL SIDEWALKS SHALL BE TREATED WITH CERTI-VEX AC 1315, PER THE MANUFACTURER'S INSTRUCTIONS.

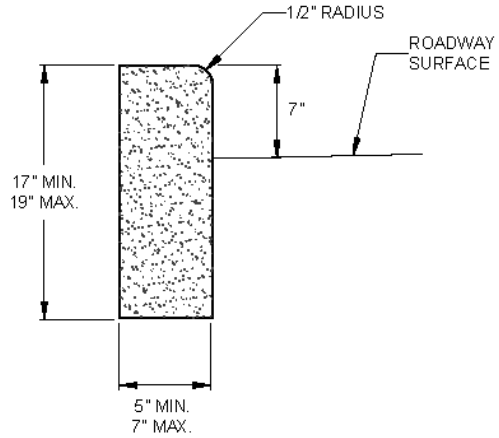

TYPICAL GRANITE CURB

STREET DETAIL

NOT TO SCALE

CURB AND CONCRETE SIDEWALK

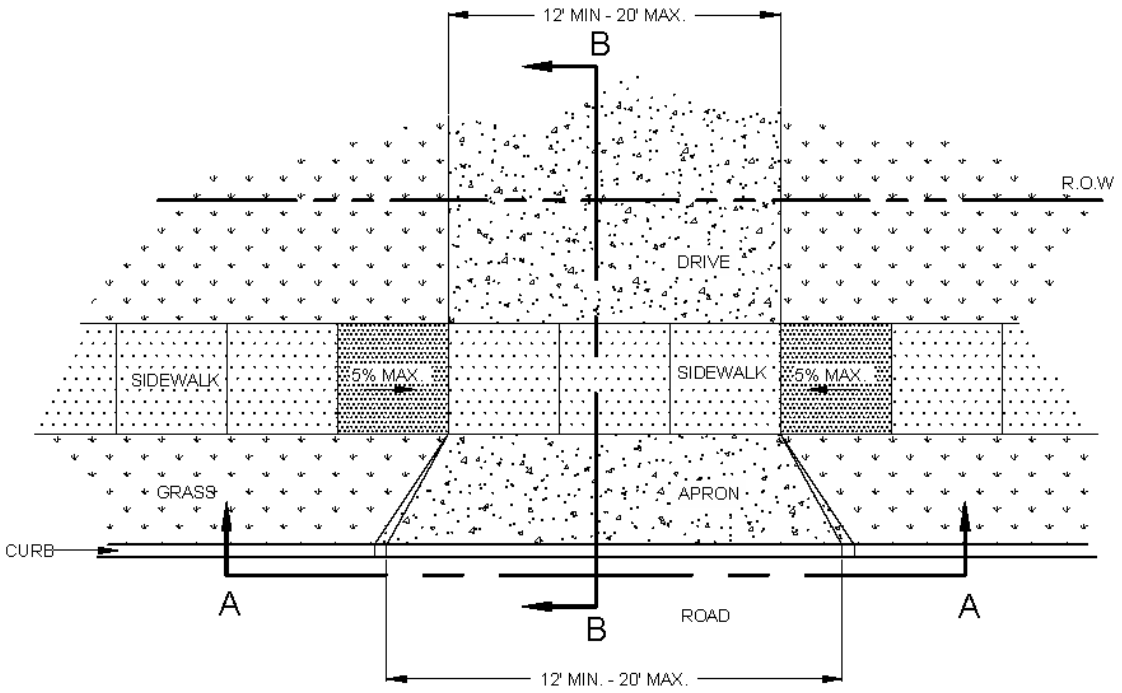

PLAN

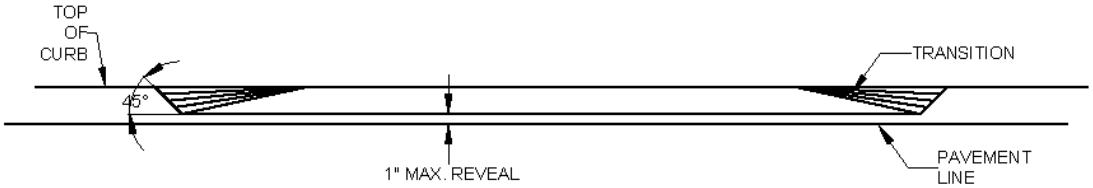

SECTION A-A

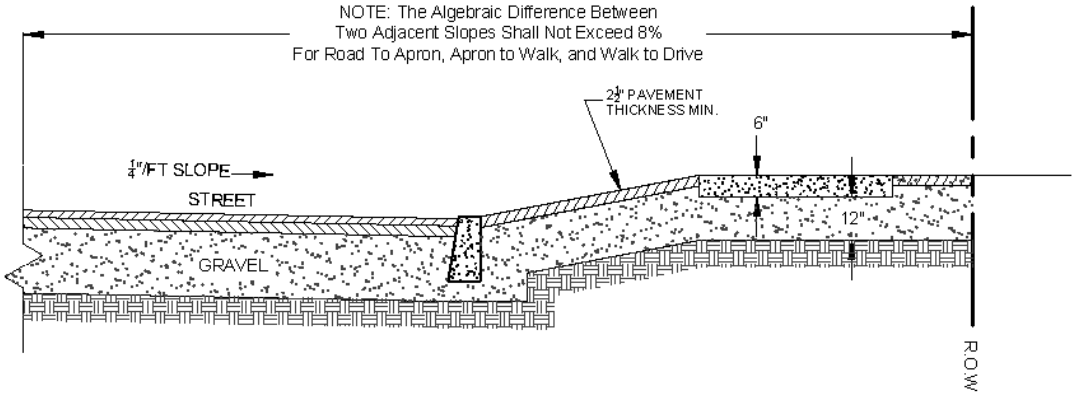

SECTION B-B

STREET DETAIL

NOT TO SCALE

RESIDENTIAL DRIVEWAY APRON

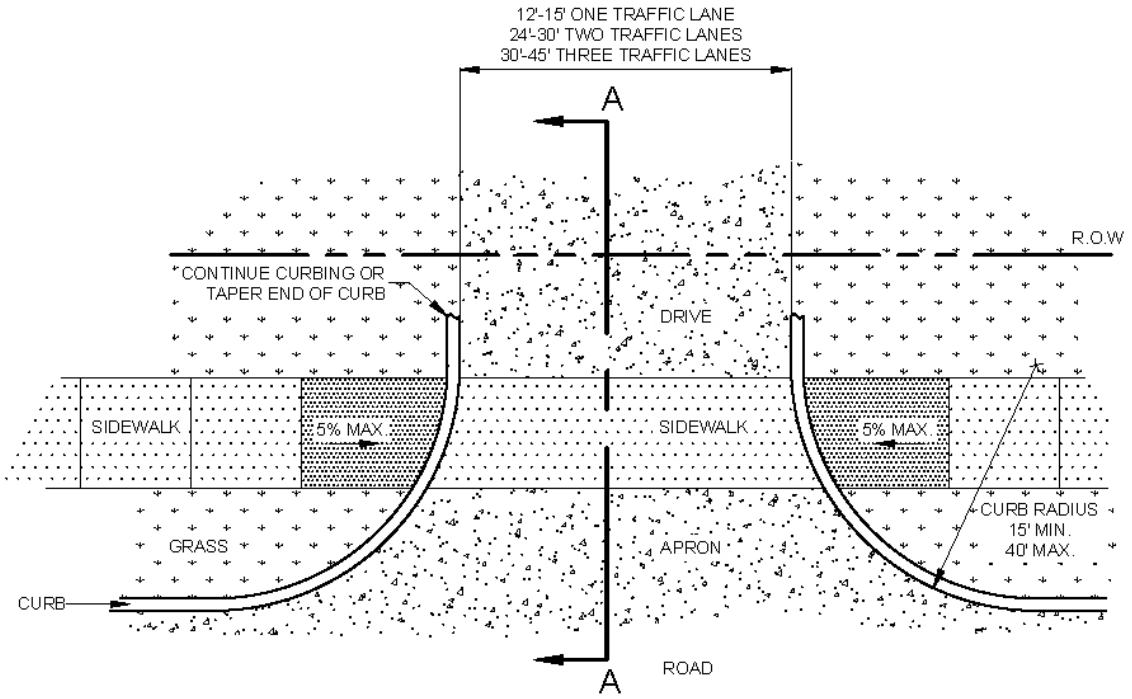

PLAN

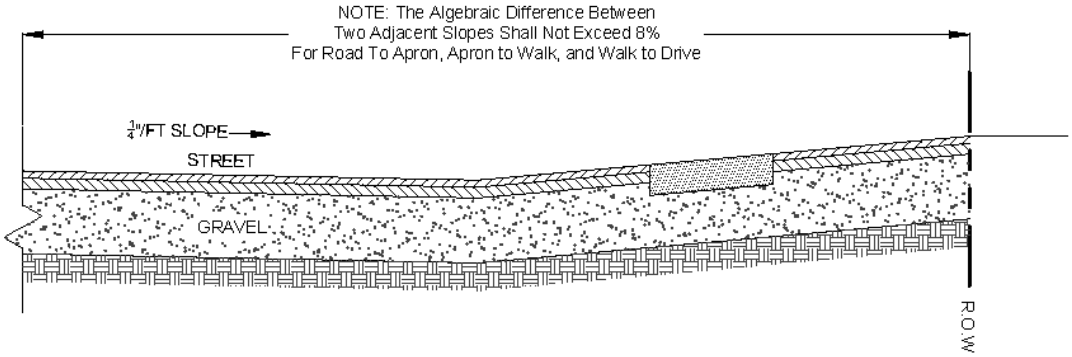

SECTION A-A

STREET DETAIL

NOT TO SCALE

COMMERCIAL/INDUSTRIAL DRIVEWAY APRON

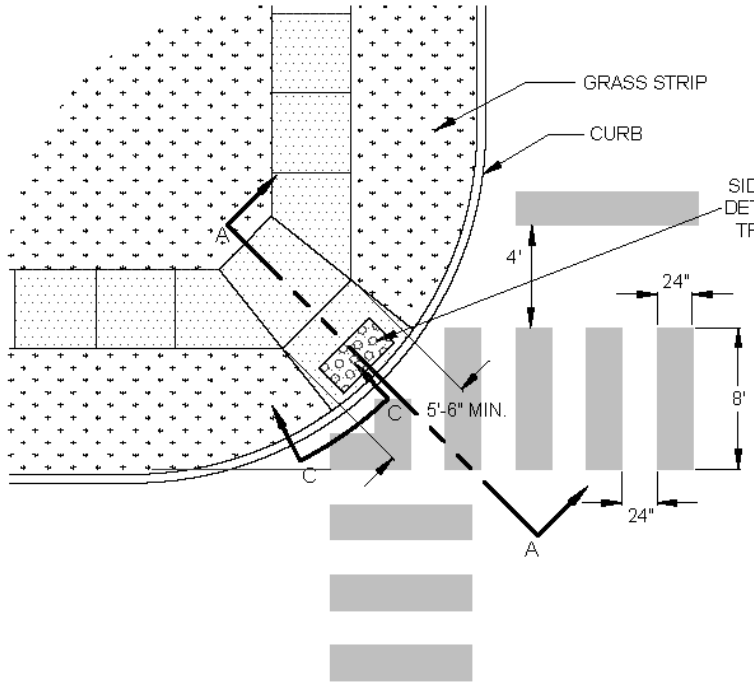

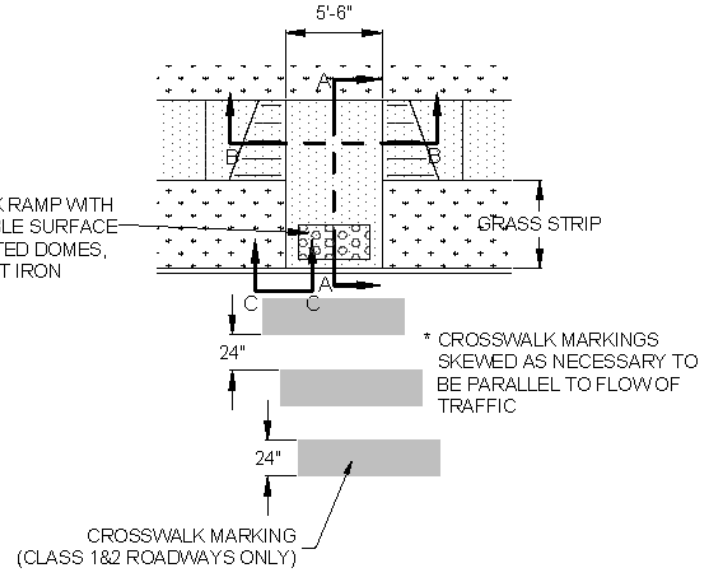

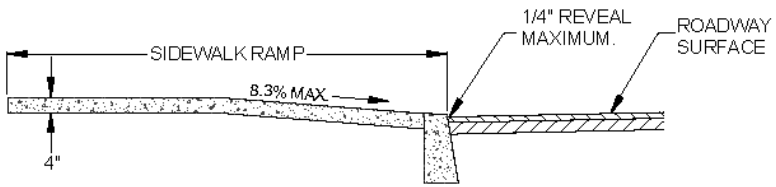

SECTION A-A

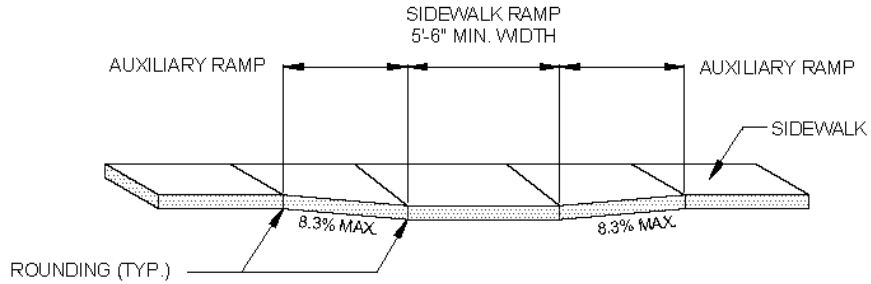

SECTION B-B

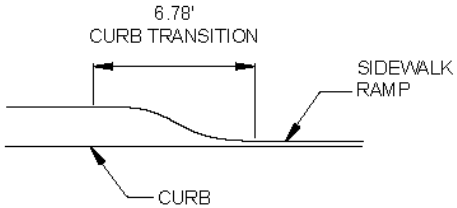

SECTION C-C

STREET DETAIL

NOT TO SCALE

SIDEWALK RAMP

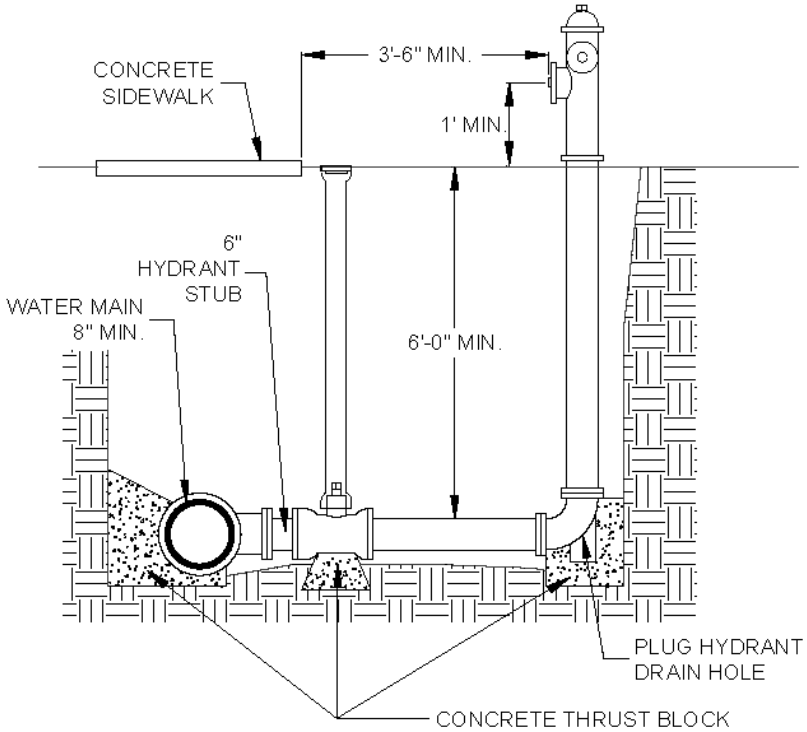

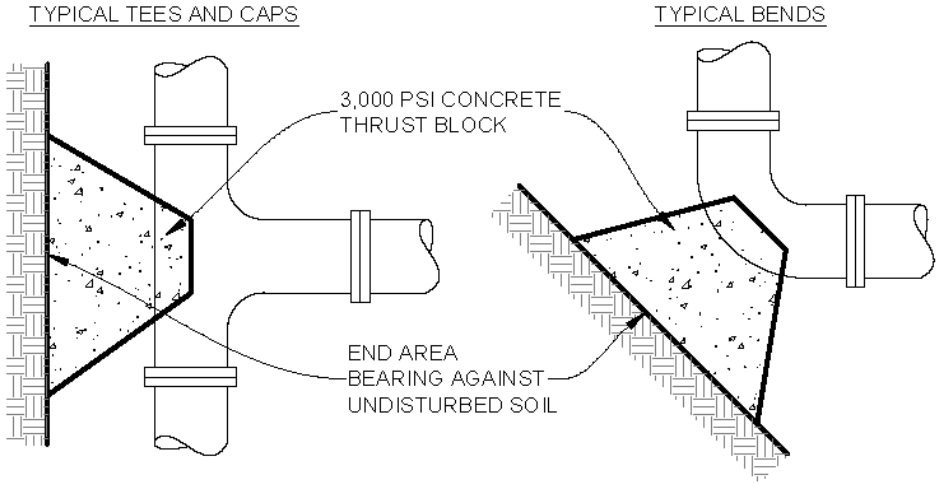

NOTES:

1) ALL BOLTS AND NUTS TO REMAIN ACCESSIBLE AND ARE TO BE COVERED WITH PLASTIC TO PREVENT CONCRETE FROM ADHERING TO THEM.
2) ALL FITTINGS ARE TO HAVE "GRIP-RING" RETAINER GLANDS OR APPROVED EQUAL.
3) ALL PIPE SHALL BE INSTALLED WITHIN DEFLECTION LIMITS PER MANUFACTURER'S SPECIFICATIONS.

HYDRANT SHALL BE ONE OF THE FOLLOWING:
KENNEDY K-81, MUELLER A-243, OR WATEROUS PACER

STEAMER CONNECTION SHALL BE A 5" STORZ CONNECTOR.

2-1/2" SPUD CONNECTION THREADS SHALL BE "DOUBLE START" STYLE.

ALL JOINTS BETWEEN MAIN AND HYDRANTS SHALL BE RESTRAINED WITH D.I. "GRIP-RING" TYPE CONNECTORS OR APPROVED EQUAL.

6"				8"				12"				16"				SOIL CONDITIONS	SAFE BEARING LOAD (PSF)
ENDS & TEES	90° ELB	45° ELB	22.5° ELB	ENDS & TEES	90° ELB	45° ELB	22.5° ELB	ENDS & TEES	90° ELB	45° ELB	22.5° ELB	ENDS & TEES	90° ELB	45° ELB	22.5° ELB		
--	--	--	--	--	--	--	--	--	--	--	--	--	--	--	--	MUCK	0
11	16	9	5	19	27	15	8	43	61	33	17	76	107	58	30	SOFT CLAY	1,000
8	11	6	3	13	18	10	5	29	41	22	12	51	72	39	20	SILT	1,500
4	6	3	2	7	9	5	3	15	21	11	6	26	36	20	10	SANDY SILT	3,000
3	4	3	2	5	7	4	2	11	16	9	5	19	27	15	8	SAND	4,000
2	3	2	1	4	5	3	2	8	11	6	3	13	18	10	5	SANDY CLAY	6,000
2	2	1	1	3	3	2	1	5	7	4	2	9	12	7	4	HARD CLAY	9,000

MAXIMUM WATER PRESSURE = 250 PSI
APPLY SAFETY FACTOR OF 1.5

NOTE: REDUCER BEARING AREA = 45° BEND, LARGER PIPE

THRUST BLOCK END AREA
(SQ. FT. BEARING AREA)

WATER DISTRIBUTION DETAILS

NOT TO SCALE

MAINS & HYDRANTS

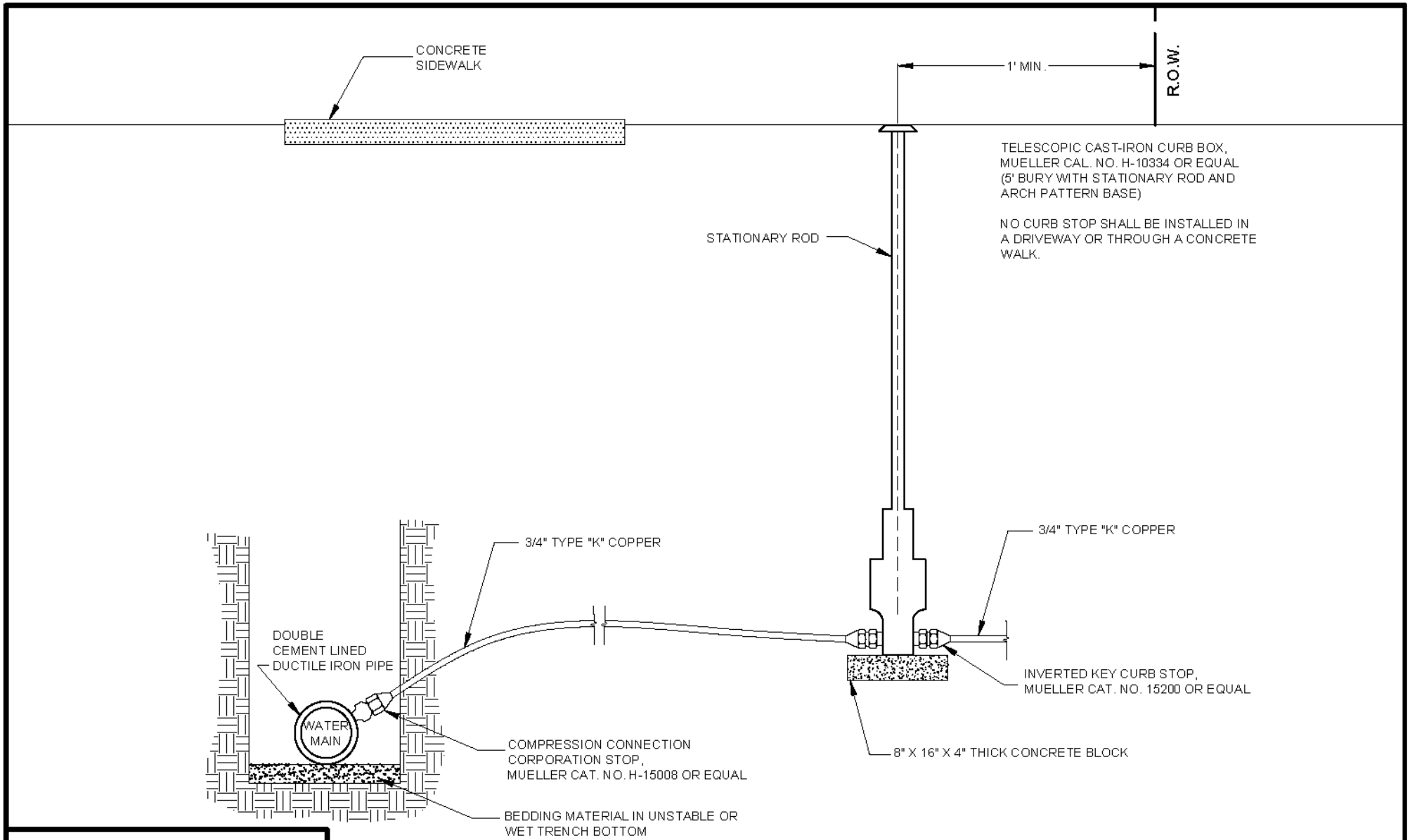

WATER DISTRIBUTION DETAILS

NOT TO SCALE

SERVICE CONNECTION

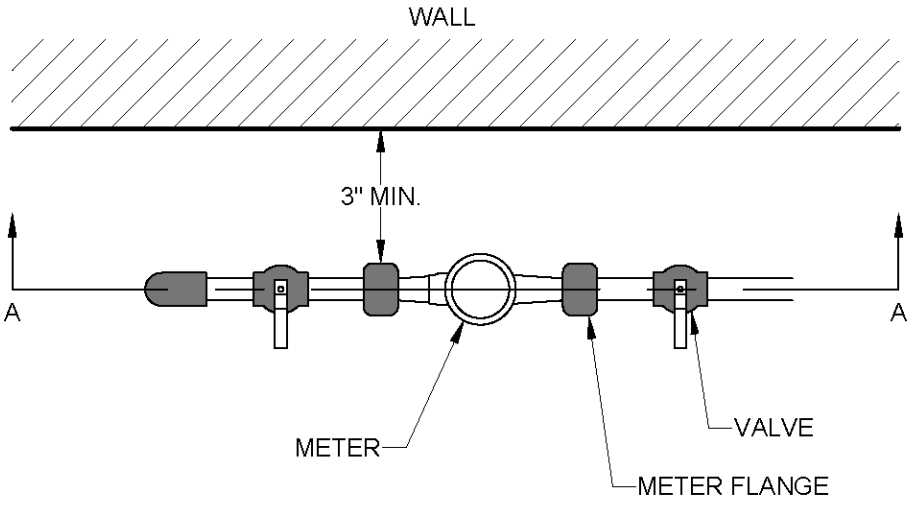

PLAN

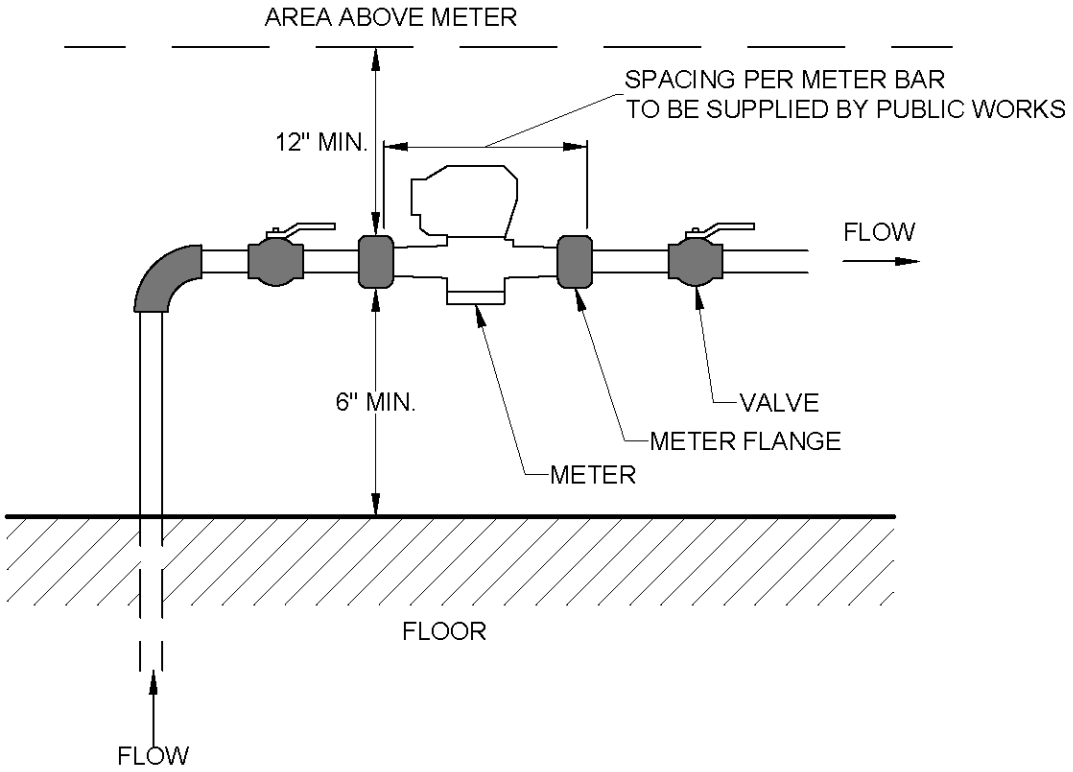

SECTION A-A

WATER METER MIN. CLEARANCES

NOT TO SCALE

3/4" METER

 12/17/2024

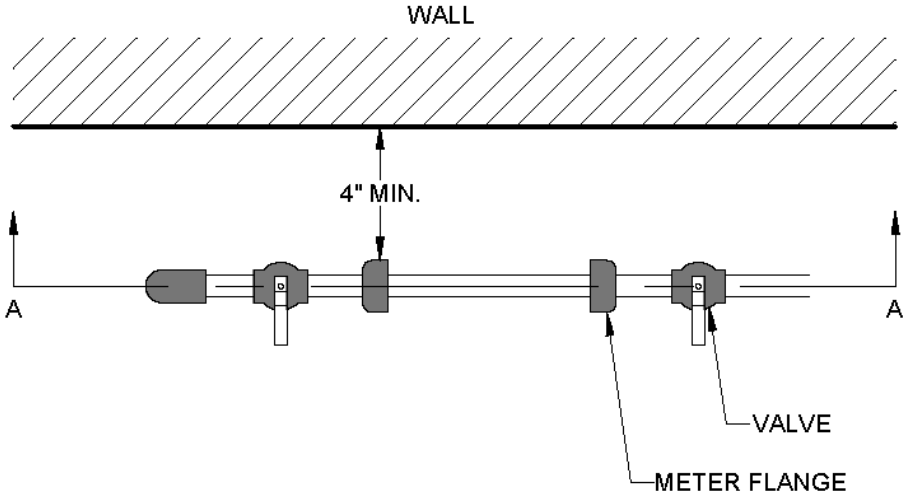

PLAN

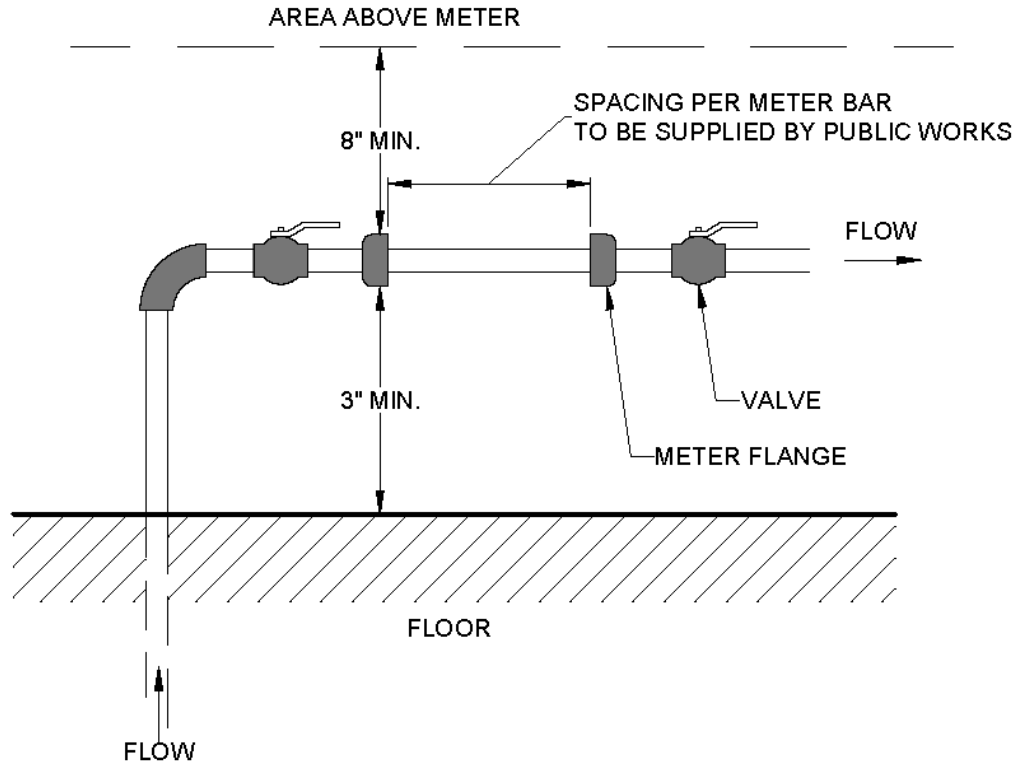

SECTION A-A

WATER METER MIN. CLEARANCES

NOT TO SCALE

1", 1-1/2", & 2" METERS

08/04/2022

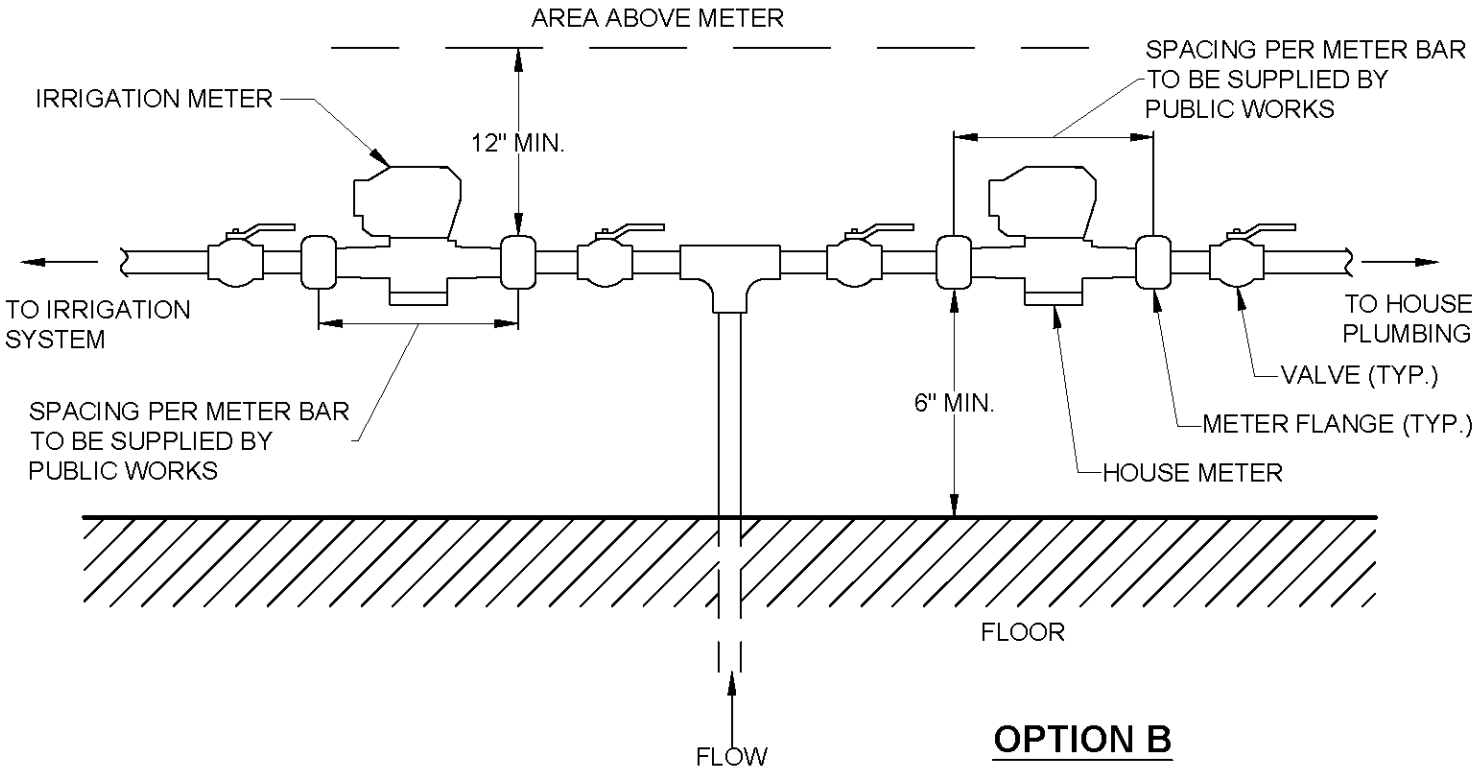

OPTION B

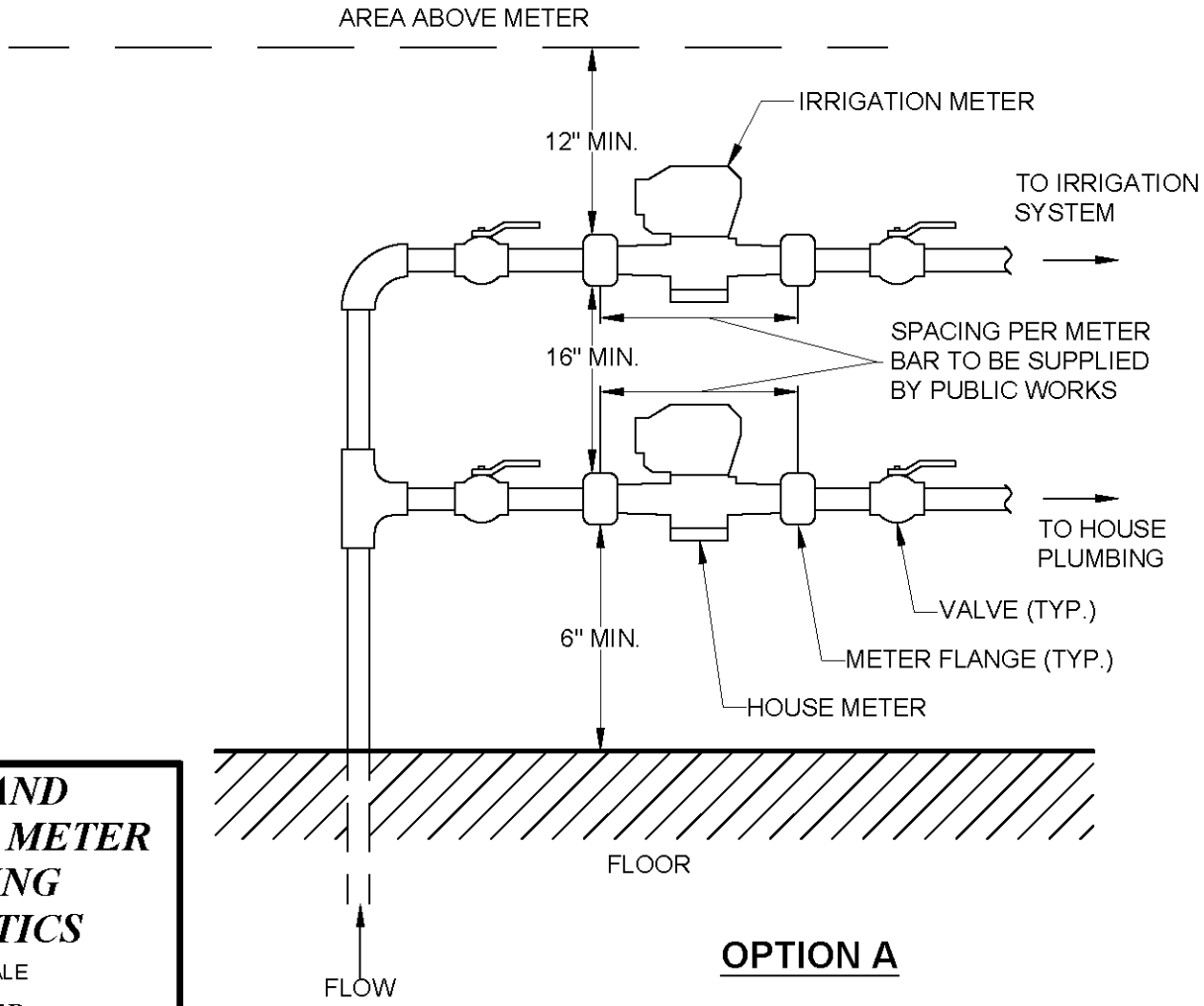

OPTION A

WATER AND IRRIGATION METER PLUMBING SCHEMATICS

NOT TO SCALE

3/4" METER

 12/17/2024

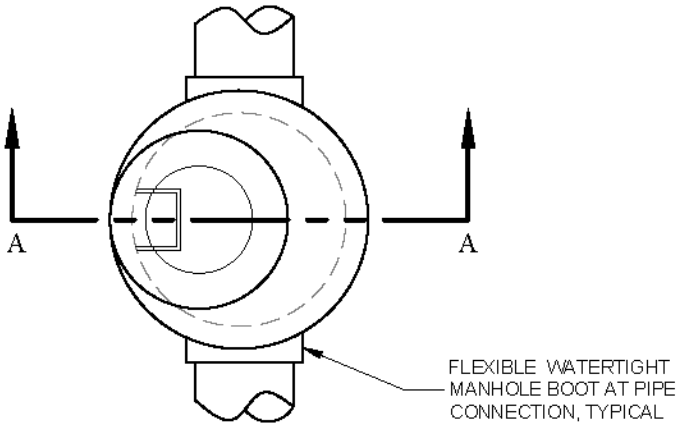

PLAN
PRECAST M.H.

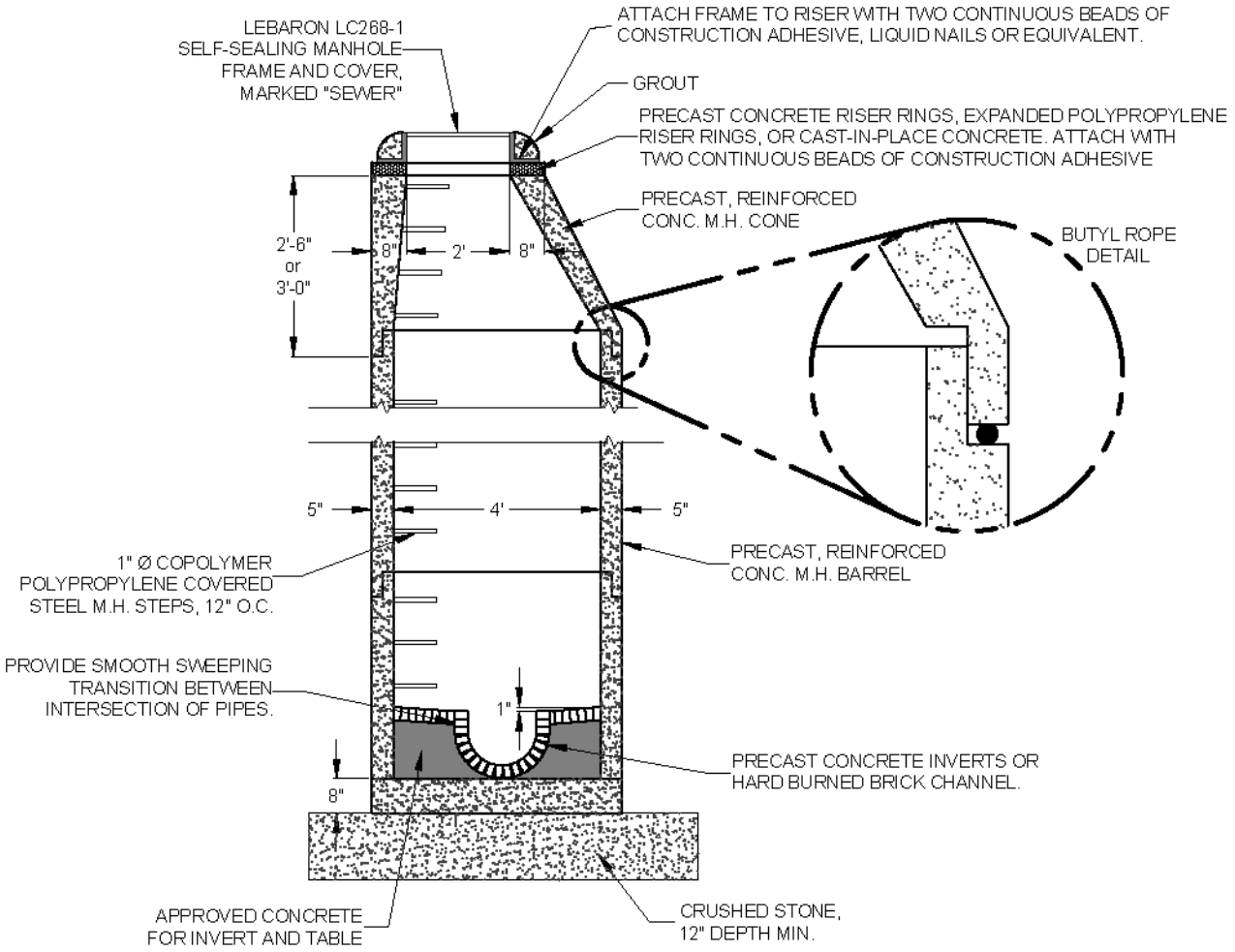

SECTION A-A

1. PRECAST MANHOLE SECTIONS PER A.S.T.M. C478
2. STEEL REINFORCED TO A.S.T.M. SPECS
3. 5,000 PSI CONCRETE
4. MONOLITHIC (58" Ø) BASE SECTION
5. MANHOLE STEPS SHALL BE COPOLYMER POLYPROPYLENE COVERED STEEL

SANITARY SEWER DETAILS

NOT TO SCALE

MANHOLES

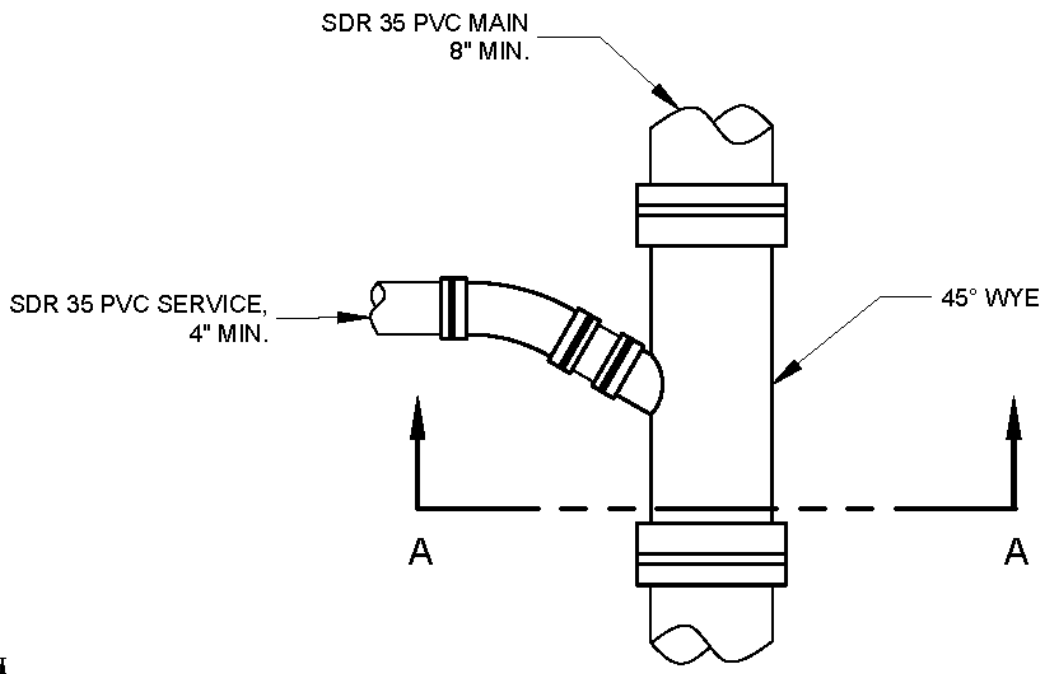

PLAN

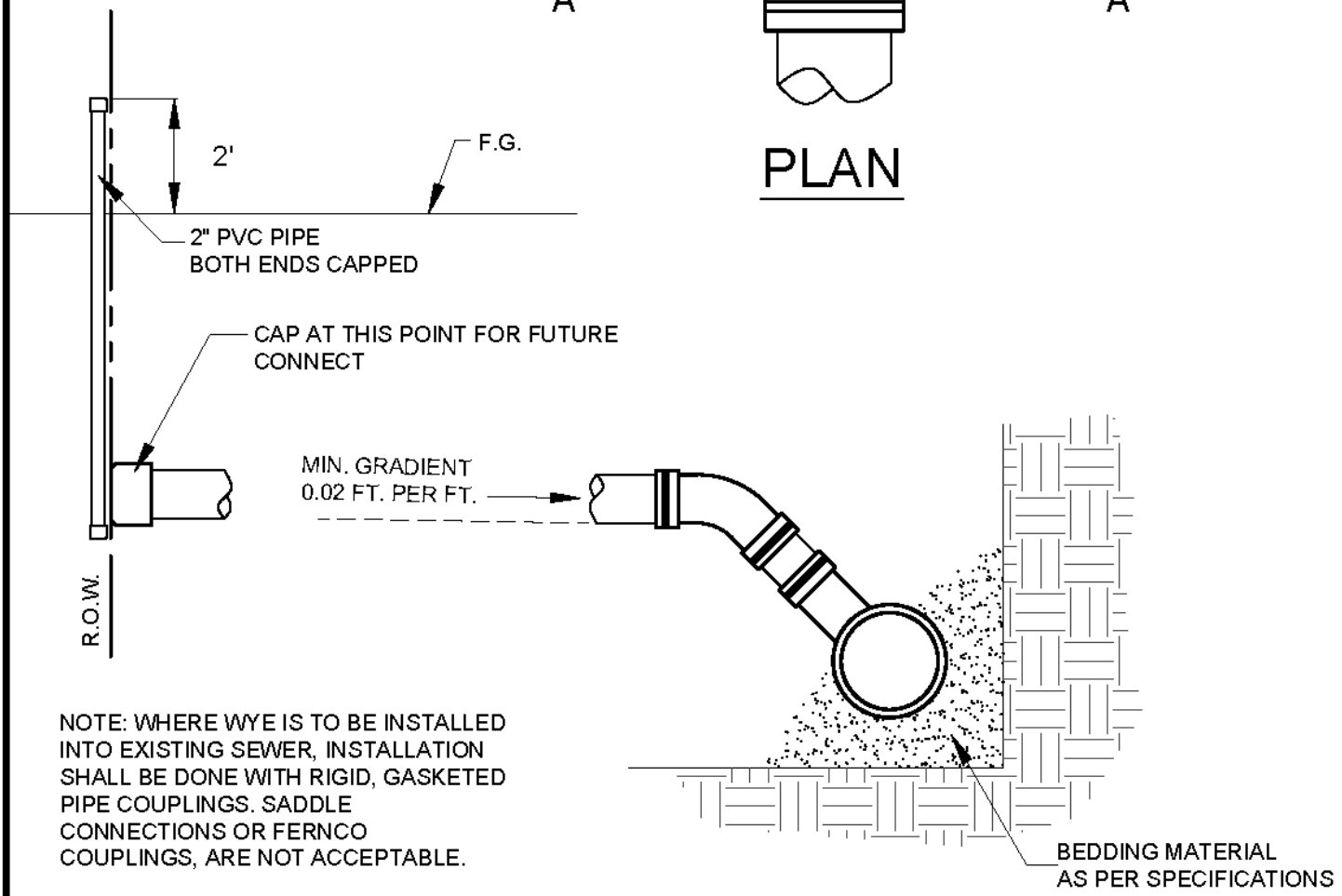

NOTE: WHERE WYE IS TO BE INSTALLED INTO EXISTING SEWER, INSTALLATION SHALL BE DONE WITH RIGID, GASKETED PIPE COUPLINGS. SADDLE CONNECTIONS OR FERNCO COUPLINGS, ARE NOT ACCEPTABLE.

SECTION A-A

SANITARY SEWER DETAILS

NOT TO SCALE

SERVICE CONNECTION

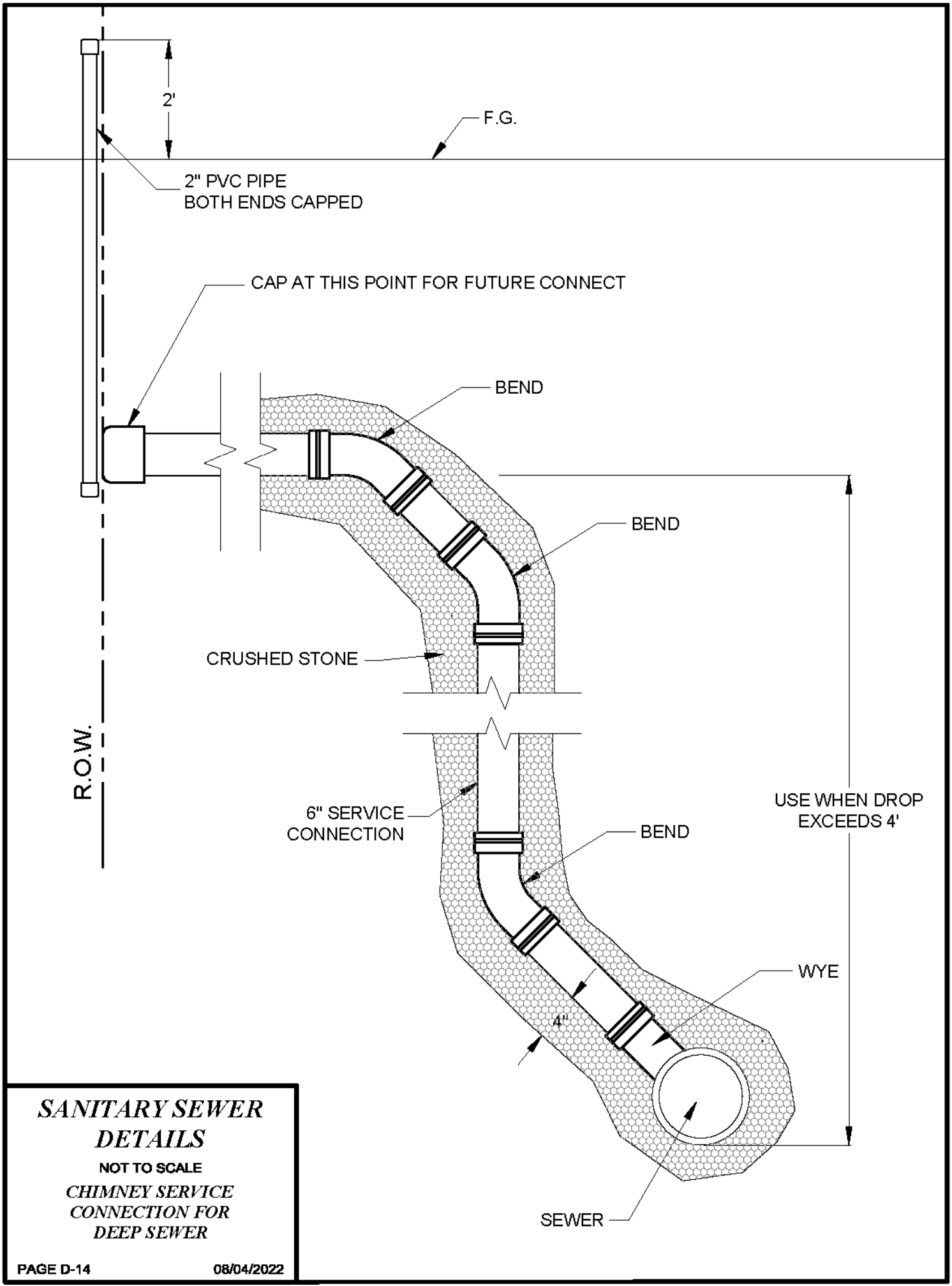

SANITARY SEWER DETAILS

NOT TO SCALE

CHIMNEY SERVICE CONNECTION FOR DEEP SEWER

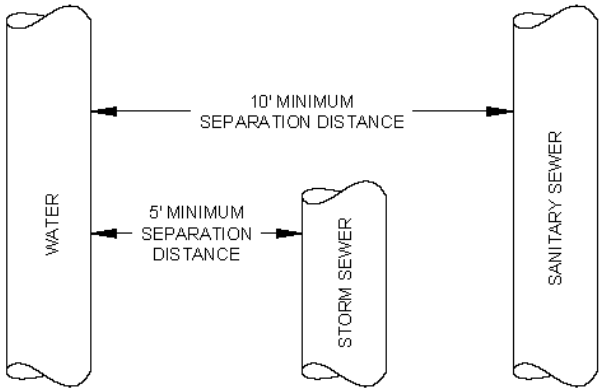

PARALLEL INSTALLATION

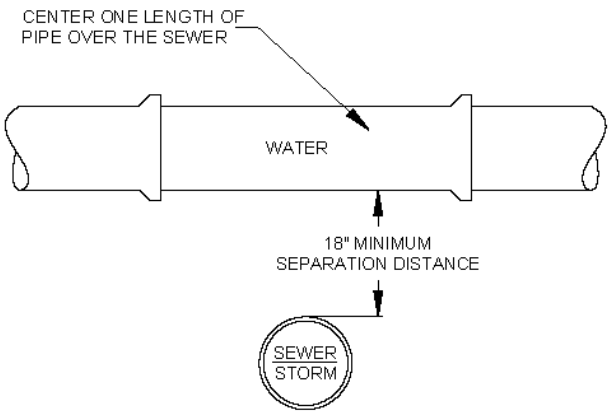

CROSSINGS

SEPARATION OF SANITARY SEWER FROM WATER

Horizontal Isolation Distances from Water Mains, Water Service Lines, and Water Service Pipes

(1) All portions of a sanitary sewer collection line and sanitary sewer service line shall be at least 10 feet horizontally from all portions of a proposed, existing, or permitted water mains, except where site conditions prevent obtaining the 10-foot separation and one of the following requirements is met:

- (A) The sanitary sewer collection line or sanitary sewer service line shall be water works grade 150 pounds per square inch pressure rated pipe meeting AWWA standard C-900 or equivalent pipe and pressure tested to 50 pounds per square inch to assure watertightness.
- (B) The bottom of the water main shall be at least 18 inches above the top of the sanitary sewer collection line or sanitary sewer service line and the water main is in a separate trench or on an undisturbed soil shelf in the sewer trench.

(2) All portions of a sanitary sewer collection line and sanitary sewer service line shall be at least 10 feet horizontally from all portions of a proposed, existing, or permitted water service line or water service pipe, except when one of the following requirements is met:

- (A) The water service line or water service pipe shall be sleeved with pipe materials approved by the Vermont Plumbing Rules, and:
  - (i) if the sleeves terminate below ground, the ends of the sleeve are sealed to be watertight; or
  - (ii) if the sleeves terminate above finished slab or in a basement, the ends of the sleeve are sealed to be watertight or left open.
- (B) The water service line or water service pipe shall be in a separate trench or an undisturbed soil shelf in the sewer trench and one of the following requirements is met:
  - (i) the bottom of the water service line or water service pipe shall be at least 18 inches above the top of the sanitary sewer collection line or sanitary sewer service line; or
  - (ii) the sanitary sewer collection line or sanitary sewer service line shall be water works grade 150 pounds per square inch pressure rated pipe meeting AWWA standard C-900 or equivalent pipe and pressure tested to 50 pounds per square inch to assure watertightness.

Vertical Separation and Crossings for Water Mains, Water Service Lines, and Water Service Pipes

(1) Sanitary sewer collection lines and sanitary sewer service lines crossing above proposed, existing, or permitted water mains shall be laid so the bottom of the collection line or service line is 18 inches above the top of the water main with the joints of the collection line or service line equal distance from the crossing, except where site conditions prevent obtaining the 18-inch separation and one of the following requirements is met:

- (A) The sanitary sewer collection line or sanitary sewer service line shall be sleeved to a point 10 horizontal feet from the center line of the crossing.
- (B) The sanitary sewer collection lines and sanitary sewer service lines shall:
  - (i) be water works grade 150 pounds per square inch pressure rated pipe meeting AWWA standard C-900 or equivalent pipe and be pressure tested to 50 pounds per square inch to assure watertightness; and
  - (ii) the sanitary sewer collection line shall be provided structural support, such as sleeving of the sanitary sewer, that will extend beyond the trench excavation for the water service line or water service pipe.

(2) Sanitary sewer collection lines and sanitary sewer service lines crossing below proposed, existing, or permitted water mains shall be laid so the top of the collection line or service line is 18 inches below the bottom of the water main, except when one of the following requirements are met:

- (A) The sanitary sewer collection lines and sanitary sewer service lines shall: be water works grade 150 pounds per square inch pressure rated pipe meeting AWWA standard C-900 or equivalent pipe and pressure tested to 50 pounds per square inch to assure watertightness.
- (B) The sanitary sewer collection line or sanitary sewer service line shall be sleeved to a point 10 horizontal feet from the center line of the crossing.

WATER & SANITARY SEWER

NOT TO SCALE

SEPARATION AND CROSSING DETAIL & NOTES

SEPARATION OF WATER FROM SANITARY SEWER AND STORM

Horizontal Isolation Distances from Sanitary Sewer Collection Lines, Sanitary Sewer Service Lines, and Storm Sewers

(1) All portions of a water service line and water service pipe shall be at least 10 feet horizontally from all portions of the proposed, existing, or permitted sanitary sewer collection lines and sanitary sewer service lines, including sewer manholes, except when the water service line or water service pipe is:

(A) sleeved with pipe materials approved by the Vermont Plumbing Rules and

(i) if the sleeves terminate below ground, the ends of the sleeve are sealed to be watertight; or

(ii) if the sleeves terminate above finished slab or in a basement, the ends of the sleeve are sealed to be watertight or left open; or

(B) in a separate trench or an undisturbed soil shelf in the sewer trench and one of the following requirements is met:

(i) the bottom of the water service line or water service pipe shall be at least 18 inches above the top of the sanitary sewer collection line or sanitary sewer service line; or

(ii) the sanitary sewer collection line or sanitary sewer service line shall be water works grade 150 pounds per square inch pressure rated pipe meeting AWWA standard C-900 or equivalent pipe and pressure tested to 50 pounds per square inch to assure watertightness.

(2) All portions of water service lines and water service pipes shall be laid at least 5 horizontal feet from all portions of a proposed, existing, or permitted storm sewer.

Vertical Separation and Crossings for Sanitary Sewer Collection Lines, Sanitary Sewer Service Lines, and Storm Sewers

(1) Water service lines and water service pipes crossing above proposed, existing, or permitted sanitary sewer collection lines or sanitary sewer service lines shall meet one of the following requirements:

(A) The bottom of the water service lines and water service pipes shall be laid 18 inches above the top of the sanitary sewer collection line or sanitary sewer service line.

(B) The water service lines and water service pipes shall be sleeved with pipe materials approved by the Vermont Plumbing Rules to a point 10-horizontal feet from the sanitary sewer collection line or sanitary sewer service line and:

(i) if the sleeves terminate below ground surface, have the ends of the sleeve sealed to be watertight; or

(ii) if the sleeves terminate above finished slab or in a basement, have the ends of the sleeve sealed to be watertight or left open.

(C) The water service lines and water service pipes shall be centered at the crossing, so the water joints will be as far as possible from the sanitary sewer joints and one of the following requirements shall be met:

(i) The water service lines and water service pipes shall be laid to provide a minimum vertical distance of 18 inches between the bottom of the water service line or water service pipe and the top of the sanitary sewer collection line or sanitary sewer service line.

(ii) The sanitary sewer collection lines and sanitary sewer service lines shall be water works grade 150 pounds per square inch pressure rated pipe meeting AWWA standard C-900 or equivalent pipe and pressure tested to 50 pounds per square inch to assure watertightness.

(2) Water service lines and water service pipes crossing below proposed, existing, or permitted sanitary sewer collection lines or sanitary sewer service lines shall meet one of the following requirements:

(A) The water service line or water service pipe shall be sleeved with pipe materials approved by the Vermont Plumbing Rules to a point 10-horizontal feet from the sanitary sewer collection line or sanitary sewer service line and:

(i) if the sleeves terminate below ground surface, have the ends of the sleeve sealed to be watertight; or

(ii) if the sleeves terminate above finished slab or in a basement, have the ends of the sleeve sealed to be watertight or left open.

(B) The water service line or water service pipe meets the following requirements:

(i) The top of the water service lines and water service pipes shall be laid 18 inches below the bottom of the sanitary sewer collection line or sanitary sewer service line.

(ii) Water service lines and water service pipes shall be centered at the crossing, so the joints in the water line or water pipe will be a minimum of 10 feet from the center line of the crossing.

(3) Water service lines and water service pipes crossing above or below proposed, existing, or permitted storm sewers shall meet the following requirements:

(A) If the water service line or water service pipe is crossing above, the water service lines and water service pipes shall be laid to provide a minimum vertical distance of 18 inches between the bottom of the water service line or water service pipe and the top of the storm drain.

(B) If the water service line or water service pipe is crossing below, the water service lines and water service pipes shall be laid to provide a minimum vertical distance of 18 inches between the top of the water service line or water service pipe and the bottom of the storm drain.

(C) Water service lines and water service pipes crossing less than 18 inches over a storm drain shall be centered at the crossing so the joints in the line or pipe will be as far as possible from the storm sewer joints.

(D) Water service lines and water service pipes crossing less than 18 inches under a storm sewer, the lines or pipes shall have the joints in the line or pipe a minimum of 10 feet from the center line of the storm drain.

WATER & SANITARY SEWER

NOT TO SCALE

SEPARATION AND CROSSING DETAIL & NOTES

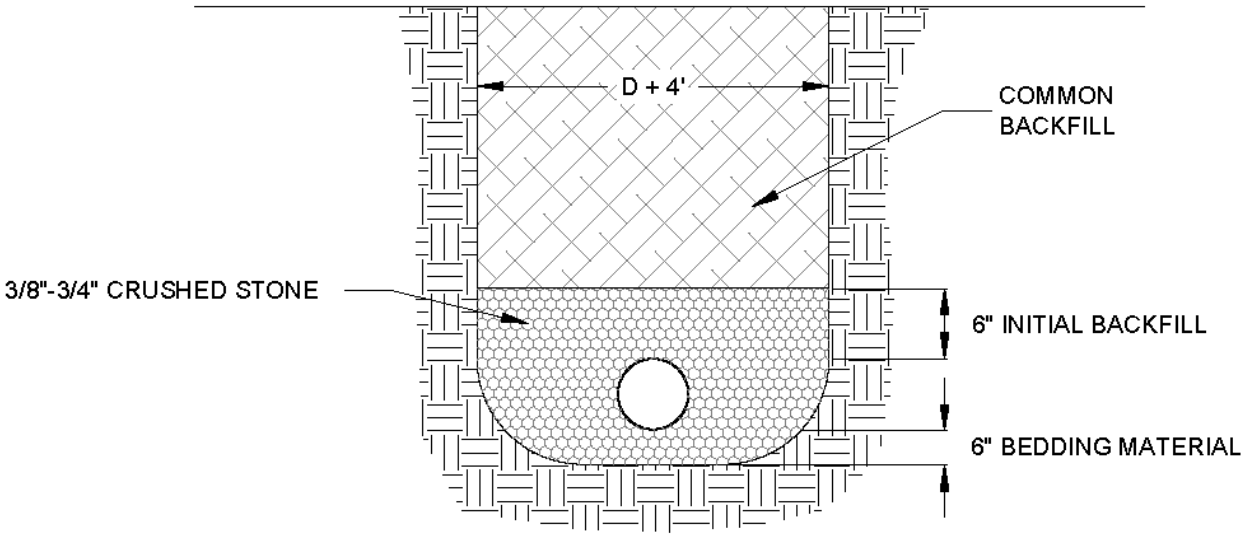

A. FLEXIBLE PIPE
(PVC, HDPE, ETC)

ALL BACKFILL SHALL BE COMPACTED TO 95% OF THE MAXIMUM DRY DENSITY USING THE STANDARD PROCTOR TEST, ACCORDING TO ASTM D698

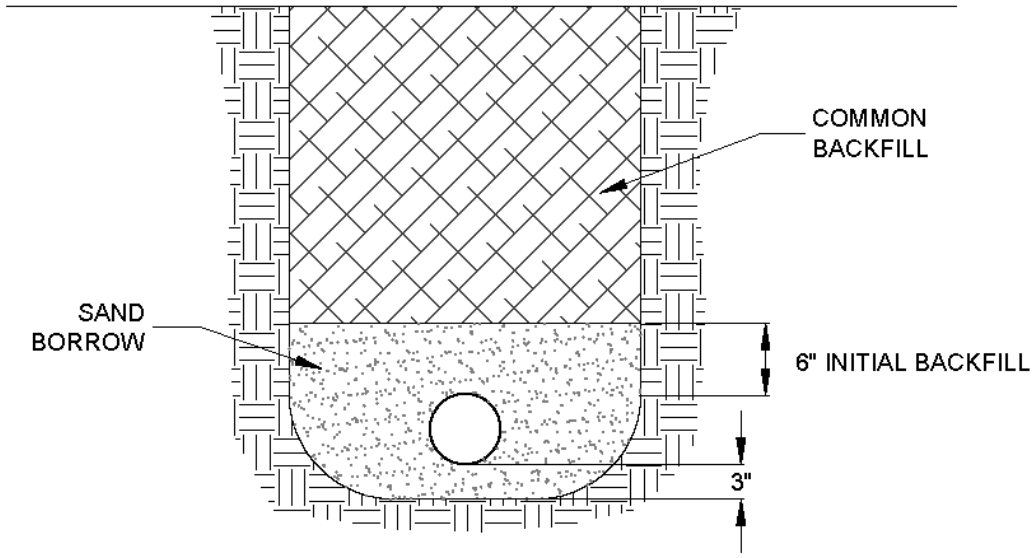

B. RIGID PIPE
(DI, RCP)

RIGID PIPE NOTES:

1. DUCTILE IRON PIPE AND FITTINGS SHALL BE WRAPPED IN V-BIO ENHANCED POLYETHYLENE PIPE ENCASEMENT.
2. IF TRENCH BOTTOM IS FORMED BY CLAY SOILS, PROVIDE 6" (MIN.) BEDDING UNDER PIPE.

TRENCH DETAIL

NOT TO SCALE

FLEXIBLE & RIGID PIPE

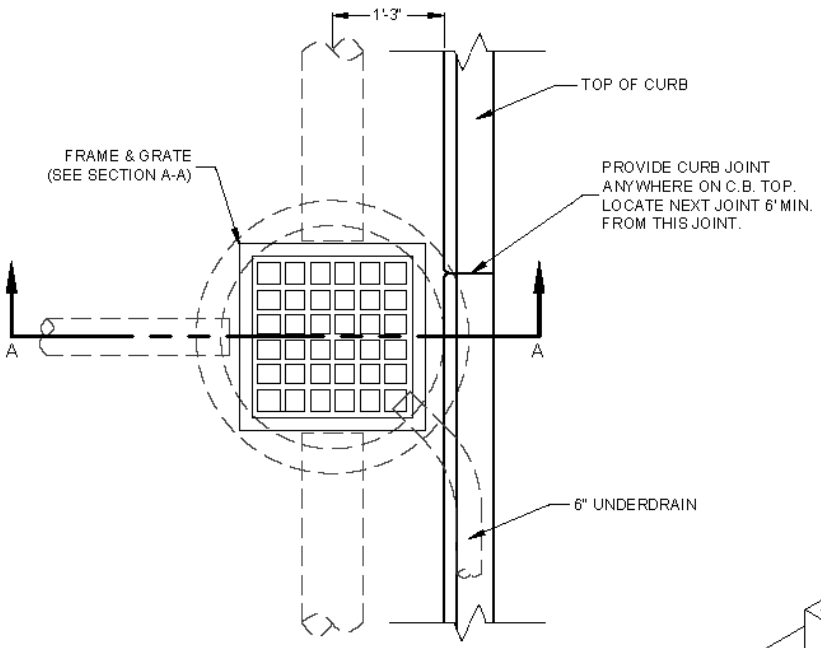

PLAN

CASCADE CATCH BASIN
LEBARON LK 450

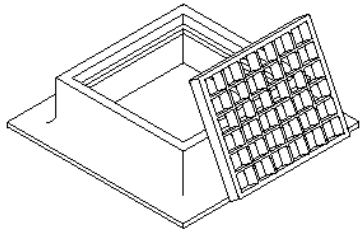

SQUARE FRAME AND GRATE
LEBARON LF248-2

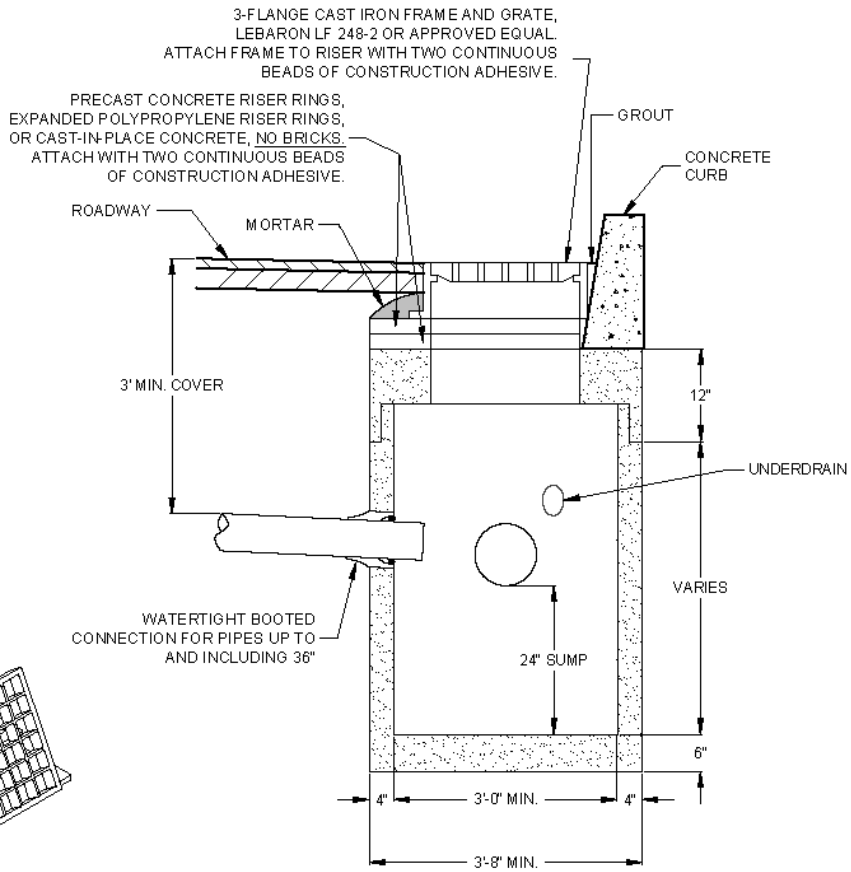

SECTION A-A

1. MINIMUM SIZE SQUARE SHAPED CATCH BASIN OR DROP INLET IS 2' x 2'.
2. MINIMUM SIZE ROUND CATCH BASIN IS 3' DIAMETER.
3. WHERE MANHOLE COVER USED INSTEAD OF GRATES, COVER SHALL BE MARKED WITH "STORM".
4. USE CASCADE GRATES WHERE ROAD SLOPE EXCEEDS 5% OR AS DIRECTED BY THE CITY ENGINEER.

	MAXIMUM PIPE DIAMETER*	
STRUCTURE DIAMETER	0°-45° DEFLECTION THROUGH STRUCTURE	45°-90° DEFLECTION THROUGH STRUCTURE
36"	18"	12"
48"	24"	18"
60"	36"	27"
72"	42"	30"
84"	48"	36"
96"	60"	42"

* IN NO CASE SHALL MORE THAN 50% OF THE STRUCTURE CIRCUMFERENCE BE REMOVED BY PIPE PENETRATIONS, AND THERE SHALL BE AT LEAST 6" OF WALL BETWEEN PENETRATIONS; UNLESS OTHERWISE APPROVED BY THE CITY ENGINEER.

STORM SEWER DETAIL

NOT TO SCALE

PRECAST CONCRETE CATCH BASIN

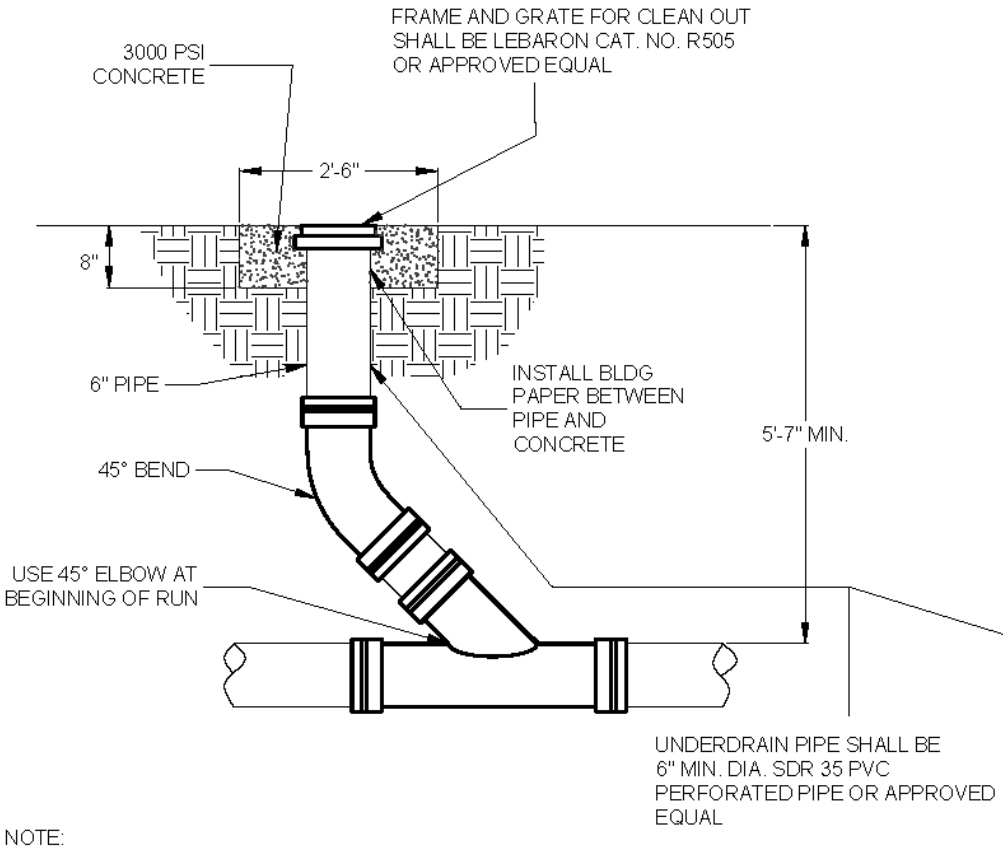

NOTE:
SEE STORM SEWER - PRECAST CONCRETE CATCH BASIN DETAIL FOR UNDERDRAIN CONNECTION.

UNDERDRAIN CLEAN OUT DETAIL

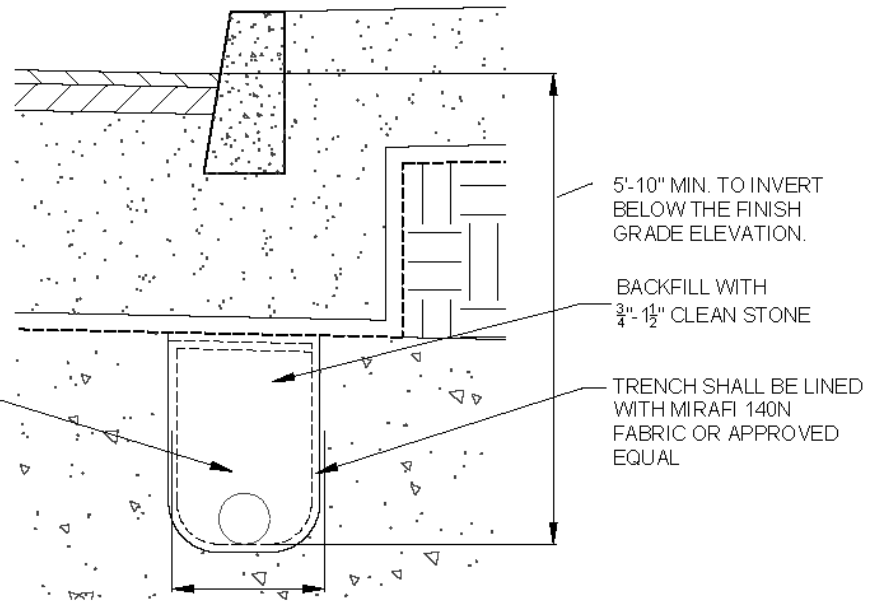

UNDERDRAIN TRENCH DETAIL

GENERAL NOTES:

1. GRADE FOR UNDERDRAIN SHALL BE PARALLEL WITH THE ROAD GRADE UNLESS OTHERWISE APPROVED BY THE CITY MINIMUM GRADE IS EQUAL TO 0.005 FT/FT.
2. CLEAN OUTS SHALL BE LOCATED IN THE GRASS STRIP BETWEEN THE CURB AND THE SIDEWALK. CLEAN OUTS SHALL BE LOCATED AT THE BEGINNING OF EACH RUN OF UNDERDRAIN. THE MAXIMUM DISTANCE BETWEEN CLEAN OUTS SHALL BE 500'.
3. UNDERDRAINS SHALL OUTLET INTO STORM CATCH BASINS OR AT OTHER SUITABLE FREE OUTLET. THE CROWN OF THE UNDERDRAIN PIPE ENTERING A CATCH BASIN SHALL NOT BE LOWER THAN THE CROWN OF THE OUTLET PIPE.

STORM SEWER DETAIL

NOT TO SCALE

UNDERDRAIN DETAIL

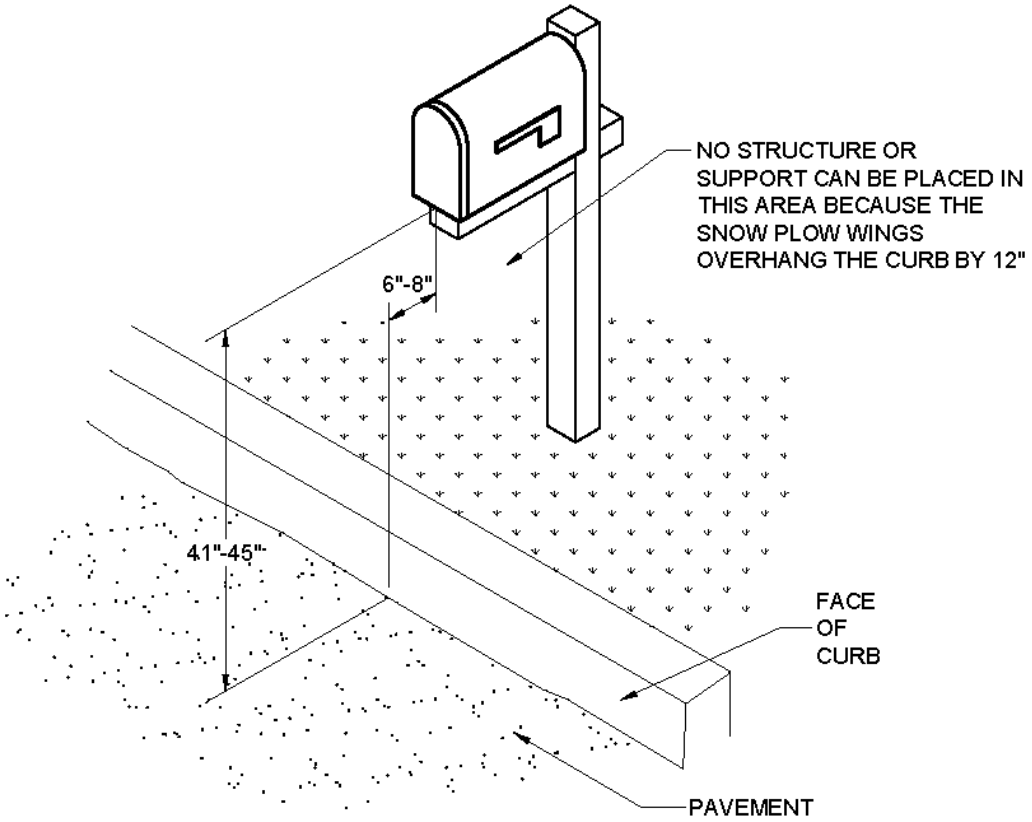

MAILBOX POST DETAIL

NOT TO SCALE

MAILBOX

A. THESE LIGHTS SHALL BE THE STANDARD FOR THE FOLLOWING STREETSCAPE CORRIDORS:

1. PEARL STREET
2. LINCOLN STREET
3. MAPLE STREET
4. MAIN STREET
5. PARK STREET

B. THESE LIGHTS SHALL BE THE STANDARD FOR A DOWNTOWN AREA WHICH IS ENCOMPASSED BY THE ABOVE NOTED CORRIDORS AND THE FOLLOWING STREETS:

1. RAILROAD AVENUE
2. RAILROAD STREET
3. THE CRESCENT CONNECTOR
4. PARK PLACE
5. SCHOOL STREET
6. LINCOLN PLACE
7. CENTRAL STREET
8. IVY LANE

C. STREET LIGHTING FOR ALL OTHER LOCATIONS SHALL BE AS DESCRIBED IN SECTION 704(F) OF THE LAND DEVELOPMENT CODE, OR APPROVED BY THE PLANNING COMMISSION.

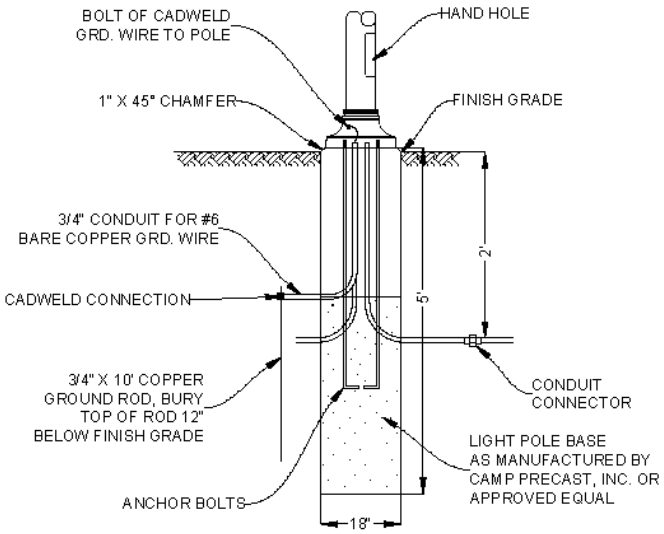

TYPICAL LIGHT POLE BASE DETAIL

NTS

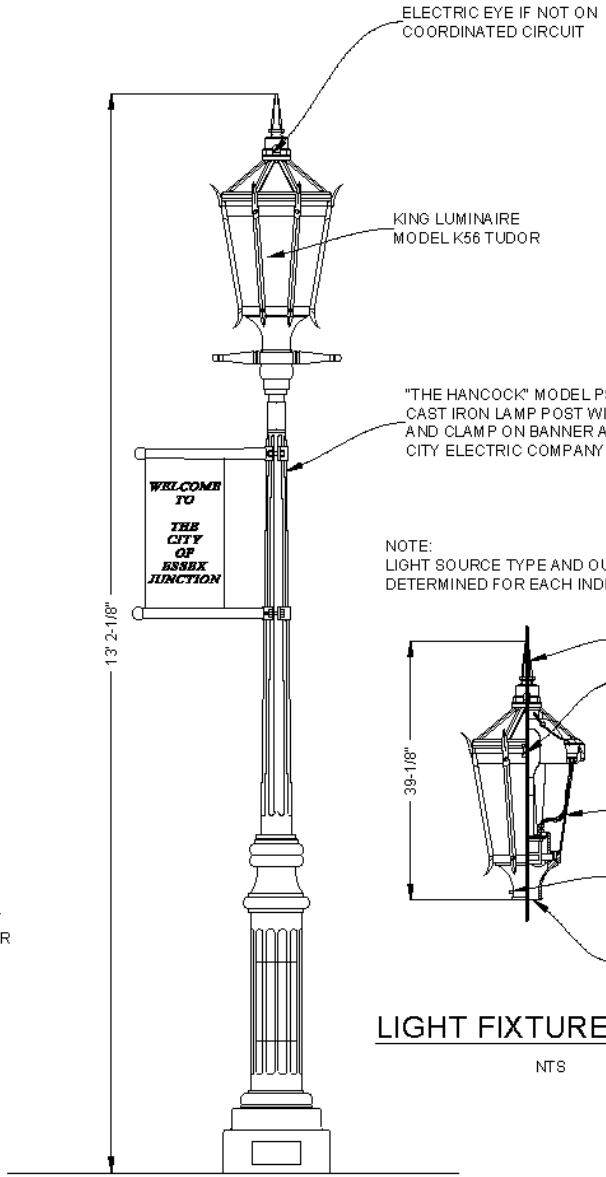

LIGHT ASSEMBLY DETAIL

NTS

NOTE:
LIGHT SOURCE TYPE AND OUTPUT TO BE DETERMINED FOR EACH INDIVIDUAL PROJECT.

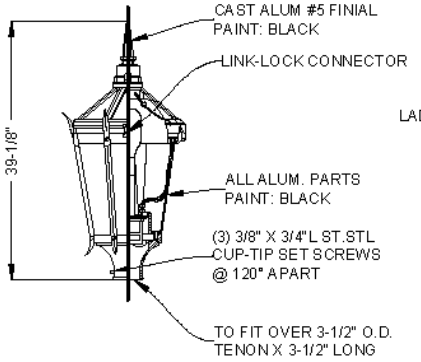

LIGHT FIXTURE DETAIL

NTS

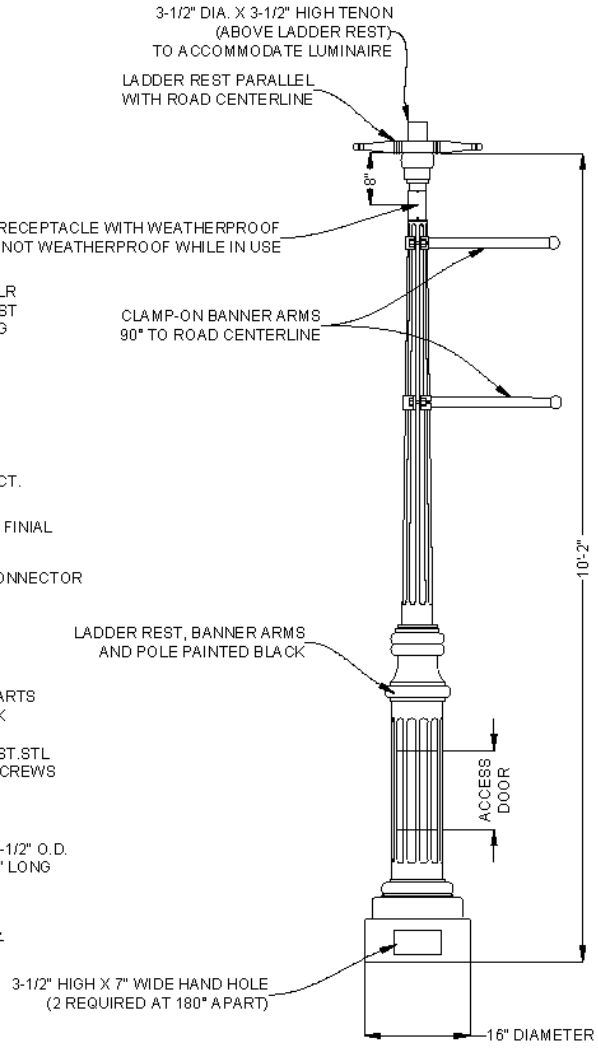

LIGHT POST DETAIL

NTS

STREET LIGHTING DETAILS

NOT TO SCALE

LIGHT POLE, LIGHT BASE & LIGHT FIXTURE

APPENDIX B: CITY COUNCIL'S POLICY FOR FUNDING ENGINEER PLAN REVIEW AND INSPECTIONS

Engineering Plan Review and Inspections Policy

Upon adoption of this policy applicants will now be required to pay the actual cost for engineering plan review and inspections. The City Engineer will bill the municipality for services rendered and the municipality will then bill the applicant based on the actual cost of providing engineering plan review and construction inspection.

Plan Review

All bills for plan review are due prior to the issuance of the first zoning permit for a project. A zoning permit will not be issued until all costs for engineering plan review have been paid. The City reserves the right to deny issuance of a zoning permit until the fees for engineering plan review have been paid. The applicant must also pay for engineering review for any site plan amendments that require engineering review. A zoning permit will not be issued for a site plan amendment until all engineering bills have been paid. The municipality will provide the applicant with a bill for engineer plan review including the number of hours spent on review.

Inspections

The applicant must pay for all costs for construction inspection by the City Engineer. All current bills must be paid before a certificate of occupancy can be issued. For projects that involve residential units being constructed over time, no certificate of occupancy will be issued unless all current bills for construction inspection have been paid. The City Engineer, at his/her discretion, may allow applicants to use their own project engineer to conduct construction testing upon determination the project engineer is qualified to do so. The applicant will be required to provide all testing data to the City Engineer for review and approval and shall pay for all costs of the City Engineer's time to review the testing data.

The City of Essex Junction reserves the right to deny issuance of a certificate of occupancy until all current engineering bills have been paid. The City engineer will provide the applicant with a bill including the number of hours spent on inspection and what was inspected.

Summary

The following is a summary of the policy for funding engineering plan review and construction inspections:

- The applicant is responsible for payment of all costs for engineering plan review
- All bills for engineering review must be paid prior to the issuance of the first zoning permit

- The applicant is responsible for the payment of all costs for construction inspection
- The Village will provide applicants with an engineering bill including the costs and hours spent on review
- All current bills for construction inspection must be paid prior to the issuance of a certificate of occupancy. All bills for construction inspection must be paid prior to the issuance of the last certificate of occupancy
- The City of Essex Junction reserves the right to withhold issuance of a zoning permit of certificate of occupancy if there are outstanding bills for engineering services
- The City Engineer, at his/her discretion, may allow applicants to use their own project engineer to conduct construction testing upon determination the project engineer is qualified to so. The applicant shall pay for the cost for the City Engineer to review and approve the testing data

APPENDIX C: CITY COUNCIL'S POLICY FOR FUNDING DEVELOPMENT REVIEW BY THE CITY ATTORNEY

City Attorney Development Review

Upon adoption of this policy applicants will now be required to pay the actual cost for review of development proposals by the City Attorney including, but not limited to homeowners association documents, condominium documents, easements and street dedications. The City Attorney will bill the municipality for services rendered and the municipality will then bill the applicant based on the actual cost of providing legal review.

Plan and Document Review

All bills for plan and document review are due prior to the issuance of the first zoning permit for a project. A zoning permit will not be issued until all costs for legal plan review have been paid. The City reserves the right to deny issuance of a zoning permit until the fees for legal review have been paid. The applicant must also pay for legal review for any site plan amendments that require legal review. A zoning permit will not be issued for a site plan amendment until all bills have been paid. The municipality will provide the applicant with a bill for legal review including the number of hours spent on review.

The City of Essex Junction reserves the right to deny issuance of a certificate of occupancy until all current legal bills have been paid. The City Attorney will provide the applicant with a bill including the number of hours spent on review of the legal documents.

Summary

The following is a summary of the policy for funding legal plan and document review:

- The applicant is responsible for payment of all costs for legal plan review.
- All bills for legal review must be paid prior to the issuance of the first zoning permit.
- The City will provide applicants with a legal bill including the costs and hours spent on review.
- The City of Essex Junction reserves the right to withhold issuance of a zoning permit or certificate of occupancy if there are outstanding bills for legal services.

City of Essex Junction Zoning

Legend

Zoning District

- Residential 1
- Residential 2
- Multi-Family Residential 1
- Multi-Family Residential 2
- Multi-Family Residential 3
- Multi-Family/Mixed Use 1
- Multi-Family/Mixed Use 2
- Village Center
- Transit Oriented Development
- Residential-Office
- Mixed Commercial Use
- Highway-Arterial
- Light Industrial
- Planned Exposition
- Planned Agriculture
- Open Space
- Floodplain
- Design Review & Historic Preservation Overlay
- North Lincoln Overlay
- Professional Office Overlay
- Current Tax Parcel Boundary

N W E S

1:15,000

0 0.25 0.5 Mile

Source:
Zoning- CCRPC, updated 2022 with Overlay
Parcels - 2021 updated through Vermont Parcel Program; Road Centerline - e911, 1/2019; Railroad - VTrans
Map created by P. Brangan using ArcGIS Pro. All data is in State Plane Coordinate System, NAD 1983.

Disclaimer:
The accuracy of information presented is determined by its sources. Errors and omissions may exist. The Chittenden County Regional Planning Commission is not responsible for these. Questions of on-the-ground location can be resolved by site inspections and/or surveys by registered surveyor. This map is not sufficient for delineation of features on-the-ground. This map identifies the presence of features, and may indicate relationships between features, but is not a replacement for surveyed information or engineering studies.

CHITTENDEN COUNTY RPC
Communities Planning Together

10/4/2024

D:\Projects24\EssexJunction\ZoningCorrections_20240827\ZoningCorrections_20240827.aprx

LOCATOR MAP

FRANKLIN COUNTY
ORLEANS COUNTY
ESSEX COUNTY
LAMOILLE COUNTY
CALEDONIA COUNTY
CHITTENDEN COUNTY
WASHINGTON COUNTY
ADDISON COUNTY
ORANGE COUNTY
RUTLAND COUNTY
WINDSOR COUNTY
BENNINGTON COUNTY
WINDHAM COUNTY