TOWN OF CHESTER

RECEIVED
APR 14 2014
Department of Housing
and Community Development

556 Elm Street
P.O. Box 370
Chester, VT 05143

(802) 875-2173
Fax (802) 875 2237

MEMORANDUM

To: Chairman, Ludlow Planning Commission
Chairman, Cavendish Planning Commission
Chairman, Baltimore Planning Commission
Chairman, Springfield Planning Commission
Chairman, Rockingham Planning Commission
Chairman, Grafton Planning Commission
Chairman, Windham Planning Commission
Chairman, Andover Planning Commission
South Windsor Regional Planning Commission
Commissioner, Dept. of Housing and Comm. Affairs

From: Town of Chester Planning Commission

Date: April 8, 2014

Re: Adoption of Unified ByLaws

Pursuant to 24 V.S.A. §4384, enclosed please find a copy of the following:

1. Reporting Form for Municipal Bylaw Amendments;
2. Notice of Hearing;
3. Copy of proposed Unified Bylaws.

Planning Commission Reporting Form for Municipal Bylaw Amendments

This report is in accordance with 24 V.S.A. §4441(c) which states:

"When considering an amendment to a bylaw, the planning commission shall prepare and approve a written report on the proposal. A single report may be prepared so as to satisfy the requirements of this subsection concerning bylaw amendments and subsection 4384(c) of this title concerning plan amendments... The report shall provide(:)

(A) brief explanation of the proposed bylaw, amendment, or repeal and ... include a statement of purpose as required for notice under §4444 of this title,

The Chester Planning Commission is in the process of unifying its zoning regulations, Subdivision Regulations and Flood Hazard Regulations into one Unified Development Bylaw. During this process, the Planning Commission has reviewed and updated various sections of the Zoning Regulations and Subdivision Regulations in an attempt to make them compatible with the newly adopted Town Plan as well as to meet recent changes to Ch. 117. A summary of the major changes made to the Zoning Regulations are as follows:

- *Combined zoning, subdivision and flood hazard regulations to create a unified development bylaw.*
- *Updated existing zoning district boundaries:*
    - *Improving conformance with Town Plan maps*
    - *Parcel-based zoning district map*
    - *Established new zoning districts for the Village area*
    - *Eliminated the existing APD zoning districts & created new APD overlay districts*
- *Evaluated & modified zoning district density and minimum lot size standards to better conform with existing and desired conditions as articulated in the Town Plan*
- *Modified allowable uses to be more appropriate for each district*
- *Clarify what needs a permit & which review procedure applies*
- *General Use Standard updates include:*
    - *Road & driveway standards were modified for consistency with town road standards and to clarify procedures for existing lots without frontage or existing access*
    - *Home occupations vs. home businesses*
    - *Modified broadcast facility standards and added de minimis impact provisions that require administrative review for projects with minimal impact*
    - *Added change of use/expansion of use language*
    - *Consolidated and amended extraction operations*
    - *Consolidated and added lot & yard requirements*
    - *Modified mobile home park standards*
    - *Minor changes to non-conformities*

    - *Parking & loading – modified standards to avoid vagueness, consistency with ADA Accessibility Guidelines, added loading/service area provisions, allow a modification of standards for the Village Center*
    - *Added performance standards*
    - *Minor changes to sign standards*
    - *Added renewable energy facility provisions*
- *Included stream setbacks in order to protect water quality and mitigate erosion hazards for new development*
- *Added zoning waiver provisions*
- *Added or clarified definitions used throughout the bylaws*
- *Clarified exemptions and limitations*
- *Streamlined subdivision review procedures:*
    - *Clarified review procedures for lot line adjustments & added administrative review procedures*
    - *Eliminate sketch plan review*
- *Amendments to Subdivision Standards included:*
    - *Lot layout provisions added to avoid irregularly shaped lots*
    - *Road, drainage & access provisions modified to be consistent with Town road standards*
    - *Clarify review procedures for access to lots without frontage*
    - *Clarify emergency service standards*
    - *Added natural & cultural resource provisions as required under 24 V.S.A. §4418(1)(D)*

The Table of Contents for the new proposed Chester Unified Development Bylaws are as follows:

ARTICLE 1 – AUTHORITY & PURPOSE
1.1 TITLE & ENACTMENT
1.2 PURPOSE
1.3 APPLICATION OF THESE BYLAWS
1.4 INVALIDITY & SEVERABILITY
1.5 AMENDMENTS & REPEAL
1.6 EFFECTIVE DATE OF BYLAWS
ARTICLE 2 – ESTABLISHMENT OF ZONING DISTRICTS & DISTRICT STANDARDS
2.1 CLASSES OF DISTRICTS
2.2 DISTRICT USES & REQUIREMENTS
2.3 VILLAGE CENTER (VC) DISTRICT
2.4 RESIDENTIAL-COMMERCIAL (RC) DISTRICT
2.5 COMMERCIAL-INDUSTRIAL (CI) DISTRICT
2.6 STONE VILLAGE (SV) DISTRICT
2.7 RESIDENTIAL 20,000 (R20) DISTRICT
2.8 RESIDENTIAL 40,000 (R40) DISTRICT
2.9 ADAPTIVE 3 (A3) DISTRICT
2.10 RESIDENTIAL 3 (R3) DISTRICT
2.11 CONSERVATION-RESIDENTIAL (CR) DISTRICT
2.12 FOREST (F) DISTRICT

2.13 Aquifer Protection Overly (APO) District
2.14 Flood Damage Prevention (FDP) District
Article 3 – General Use Standards
3.1 Accessory Dwelling Unit
3.2 Broadcast Facilities
3.3 Camping/Travel Trailer, Pick-up Coach, Motor Home & Tent Site Park
3.4 Change or Expansion of Use
3.5 Compliance with Bylaws
3.6 Damaged Structures
3.7 Erosion Control & Development on Steep Slopes
3.8 Equal Treatment of Housing
3.9 Extraction Operations
3.10 Family Child Care
3.11 Home Occupation
3.12 Home Business
3.13 Landscaping and Screening Requirements
3.14 Lot and Yard Requirements
3.15 Low and Moderate Income Housing
3.16 Mobile Home Park
3.17 Mobile Home Storage
3.18 Mobile Home(s) for Agricultural Employees
3.19 Non-Conformities
3.20 Off-Street Parking
3.21 Parcels in Two or More Districts
3.22 Performance Standards
3.23 Renewable Energy Facilities
3.24 Required Frontage on, or Access to Public Roads or Waters
3.25 Residential Care and Group Homes
3.26 Sewage Disposal Permit
3.27 Signs
3.28 Structures for Agriculture
3.29 Storage of Flammable Fluids
3.30 Surface Water Protections
Article 4 – Development Review Procedures
4.1 Applicability & Coordination of Review Process
4.2 Limitations & Exemptions
4.3 temporary uses
4.4 Application Submission Requirements
4.5 Site Visits
4.6 Conditional Uses
4.7 Planned Unit Development
4.8 Flood Damage Prevention Review Procedures
4.9 Subdivision Review Procedures
4.10 Boundary Line Adjustment
Article 5 – Subdivision Standards
5.1 Planning Standards

5.2 Road Design
5.3 Utility Design
5.4 Construction Standards
5.5 Additional Planning Requirements
5.6 protection of natural and cultural resources
Article 6 – Flood Damage Prevention Standards
6.1 Base Flood Elevations & Floodway Limits
6.2 Development Standards
Article 7 – Administration & Enforcement
7.1 Administrative Officer
7.2 Permit
7.3 Effective Day of Permit
7.4 Time Limit on Permits
7.5 Certifications
7.6 Fees
7.7 Records
7.8 Planning Commission
7.9 Development Review Board (DRB)
7.10 Violations & Enforcement
7.11 Appeals
7.12 Interested Persons
7.13 Notice of Appeal to the DRB
7.14 Appeals to Environmental Court
7.15 Variance
7.16 Waivers
7.17 Public Notice
7.18 Public Hearings
7.19 Decisions
7.20 Recording Requirements
Article 8 – Definitions
8.1 Terms and Uses
8.2 Definitions
Maps
Appendices
A. Allowable Land Uses by Zoning District
B. Dimensional Standards by Zoning District
C. Vermont Accepted Agricultural Practices

Copies of the proposed Unified Development Bylaws are available for public inspection at the Chester Town Offices.

1. Conforms with or furthers the goals and policies contained in the municipal plan, including the effect of the proposal on the availability of safe and affordable housing:

   The new Unified Development Bylaws were modified to better address affordable housing both in respect to statutory requirements as well as the goals and policies of the town plan.

The new and modified zoning districts in the village area (Village Center, Residential-Commercial and Stone Village Districts) incorporate densities that, in part, address the inconsistencies and inappropriate standards that posed problems with recent affordable housing projects.

2. Is compatible with the proposed future land uses and densities of the municipal plan:

   Amendments of the zoning and subdivision standards bring the bylaws into compliance with the goals and policies of the town plan, including but not limited to modifying zoning district boundaries and standards, encouraging high-density mixed uses in the Village and low-density developments and working landscapes in the more rural areas. These proposed changes also seek to provide clear guidance in the form of zoning district purpose statements that are consistent with the town plan future land use categories. The proposed changes also seek to incorporate certain recommendations from the VT Route 103 Corridor Management Plan.

3. Carries out, as applicable, any specific proposals for any planned community facilities:

   There are no planned community facilities at this time. However, the proposed changes allow the DRB to require rights-of-way for the provision of future sidewalks. This better enables the community to ensure that the long-range goal of developing sidewalks from the Village connecting to the high school.

TOWN OF CHESTER

556 Elm Street
P.O. Box 370
Chester, VT 05143

(802) 875-2173
Fax (802) 875 2237

TOWN OF CHESTER PLANNING COMMISSION
NOTICE OF PUBLIC HEARING

Pursuant to 24 V.S.A. §4384, a Public Hearing will be held before the Planning Commission for the Town of Chester, at **7:00 p.m. on Monday, May 19, 2014** at the Chester Town Office to consider the adoption of the Unified Bylaws which combines the Zoning Regulations, Flood Hazard Regulations and Subdivision Regulations.

A copy of the proposed Unified Bylaws are available at the Chester Town Office during normal office hours, Monday through Friday, 8:00 a.m. until 4:00 p.m.

UNIFIED DEVELOPMENT BYLAWS

TOWN OF CHESTER, VERMONT

PUBLIC HEARING DRAFT: MAY __, 2014

ADOPTED: _____

EFFECTIVE: _____

These Unified Development Bylaws were developed by the Chester Planning Commission
with assistance from the
Southern Windsor County Regional Planning Commission, Ascutney, VT

Financial support for undertaking this revision was provided, in part, by a grant from the
Vermont Agency of Commerce and Community Development

CHESTER UNIFIED DEVELOPMENT BYLAWS – *DRAFT 03/31/2014*

ARTICLE 1 – AUTHORITY & PURPOSE
- 1.1 TITLE & ENACTMENT
- 1.2 PURPOSE
- 1.3 APPLICATION OF THESE BYLAWS
- 1.4 INVALIDITY & SEVERABILITY
- 1.5 AMENDMENTS & REPEAL
- 1.6 EFFECTIVE DATE OF BYLAWS

ARTICLE 2 – ESTABLISHMENT OF ZONING DISTRICTS & DISTRICT STANDARDS
- 2.1 CLASSES OF DISTRICTS
- 2.2 DISTRICT USES & REQUIREMENTS
- 2.3 VILLAGE CENTER (VC) DISTRICT
- 2.4 RESIDENTIAL-COMMERCIAL (RC) DISTRICT
- 2.5 COMMERCIAL-INDUSTRIAL (CI) DISTRICT
- 2.6 STONE VILLAGE (SV) DISTRICT
- 2.7 RESIDENTIAL 20,000 (R20) DISTRICT
- 2.8 RESIDENTIAL 40,000 (R40) DISTRICT
- 2.9 ADAPTIVE 3 (A3) DISTRICT
- 2.10 RESIDENTIAL 3 (R3) DISTRICT
- 2.11 CONSERVATION-RESIDENTIAL (CR) DISTRICT
- 2.12 FOREST (F) DISTRICT
- 2.13 AQUIFER PROTECTION OVERLY (APO) DISTRICT
- 2.14 FLOOD DAMAGE PREVENTION (FDP) DISTRICT

ARTICLE 3 – GENERAL USE STANDARDS
- 3.1 ACCESSORY DWELLING UNIT
- 3.2 BROADCAST FACILITIES
- 3.3 CAMPING/TRAVEL TRAILER, PICK-UP COACH, MOTOR HOME & TENT SITE PARK
- 3.4 CHANGE OR EXPANSION OF USE
- 3.5 COMPLIANCE WITH BYLAWS
- 3.6 DAMAGED STRUCTURES
- 3.7 EROSION CONTROL & DEVELOPMENT ON STEEP SLOPES
- 3.8 EQUAL TREATMENT OF HOUSING
- 3.9 EXTRACTION OPERATIONS
- 3.10 FAMILY CHILD CARE
- 3.11 HOME OCCUPATION
- 3.12 HOME BUSINESS
- 3.13 LANDSCAPING AND SCREENING REQUIREMENTS
- 3.14 LOT AND YARD REQUIREMENTS
- 3.15 LOW AND MODERATE INCOME HOUSING
- 3.16 MOBILE HOME PARK
- 3.17 MOBILE HOME STORAGE
- 3.18 MOBILE HOME(S) FOR AGRICULTURAL EMPLOYEES
- 3.19 NON-CONFORMITIES
- 3.20 OFF-STREET PARKING

3.21 Parcels in Two or More Districts
3.22 Performance Standards
3.23 Renewable Energy Facilities
3.24 Required Frontage on, or Access to Public Roads or Waters
3.25 Residential Care and Group Homes
3.26 Sewage Disposal Permit
3.27 Signs
3.28 Structures for Agriculture
3.29 Storage of Flammable Fluids
3.30 Surface Water Protections
Article 4 – Development Review Procedures
4.1 Applicability & Coordination of Review Process
4.2 Limitations & Exemptions
4.3 temporary uses
4.4 Application Submission Requirements
4.5 Site Visits
4.6 Conditional Uses
4.7 Planned Unit Development
4.8 Flood Damage Prevention Review Procedures
4.9 Subdivision Review Procedures
4.10 Boundary Line Adjustment
Article 5 – Subdivision Standards
5.1 Planning Standards
5.2 Road Design
5.3 Utility Design
5.4 Construction Standards
5.5 Additional Planning Requirements
5.6 protection of natural and cultural rescourses
Article 6 – Flood Damage Prevention Standards
6.1 Base Flood Elevations & Floodway Limits
6.2 Development Standards
Article 7 – Administration & Enforcement
7.1 Administrative Officer
7.2 Permit
7.3 Effective Day of Permit
7.4 Time Limit on Permits
7.5 Certifications
7.6 Fees
7.7 Records
7.8 Planning Commission
7.9 Development Review Board (DRB)
7.10 Violations & Enforcement
7.11 Appeals
7.12 Interested Persons
7.13 Notice of Appeal to the DRB
7.14 Appeals to Environmental Court

7.15 VARIANCE
7.16 WAIVERS
7.17 PUBLIC NOTICE
7.18 PUBLIC HEARINGS
7.19 DECISIONS
7.20 RECORDING REQUIREMENTS
ARTICLE 8 – DEFINITIONS
8.1 TERMS AND USES
8.2 DEFINITIONS

MAPS

APPENDICES
A. ALLOWABLE LAND USES BY ZONING DISTRICT
B. DIMENSIONAL STANDARDS BY ZONING DISTRICT
C. VERMONT ACCEPTED AGRICULTURAL PRACTICES

CHESTER UNIFIED DEVELOPMENT BYLAWS – DRAFT 04/07/2014

ARTICLE 1 – AUTHORITY & PURPOSE

1.1 TITLE AND ENACTMENT

In accordance with the Vermont Municipal and Regional Planning and Development Act (herein referred to as "the Act"), Title 24, Vermont Statutes Annotated, Chapter 117, § 4401, there are established zoning, subdivision and flood damage prevention regulations for the TOWN OF CHESTER as set forth in their entirety in the following text and maps. These regulations shall be known and cited as the "***Town of Chester Unified Development Bylaws***."

1.2 PURPOSE

It is the purpose of these Bylaws to provide for orderly community growth; to promote public health, safety and welfare; to further the purposes and goals established in the Act [§4302]; to integrate all administrative and regulatory provisions of the Town's zoning, subdivision and flood damage prevention regulations into a single set of land use bylaws as authorized by the Act [§4419]; and to implement the *Chester Town Plan* as most recently amended. In conformance with the *Chester Town Plan*, these Bylaws are specifically intended to help:

A. Maintain the existing settlement pattern of compact village centers separated by rural countryside;
B. Protect important natural and historical features, including woodlands, wetlands, scenic and significant archeological sites, significant architecture, villages, wildlife habitats and agricultural land;
C. Provide the availability of safe and adequate housing for all residents;
D. Promote strong and diverse economy that provides satisfying and rewarding job opportunities;
E. Maintain a safe, convenient, economic and energy efficient transportation network;
F. Ensure that the rate and scale of development does not overburden the Town's ability to provide necessary public services and facilities; and,
G. Establish flood damage prevention regulations in accordance with the Act [§4424] in order to:
    1. Minimize and prevent the loss of life and property, the disruption of commerce, the impairment of the tax base, and the extraordinary public expenditures and demands on public services that result from flooding and other flood related hazards;
    2. Ensure that the design and construction of development in flood and other hazard areas are accomplished in a manner that minimizes or eliminates the potential for flood and loss or damage to life and property;
    3. Manage all flood hazard areas designated pursuant to 10 V.S.A. § 753; and,
    4. Make the state, municipalities, and individuals eligible for federal flood insurance and other federal disaster recovery and hazard mitigation funds as may be available.

1.3 APPLICATION OF THESE BYLAWS

A. The provisions of these Bylaws shall be the minimum requirements adopted for the promotion of the public health, safety, comfort, convenience and general welfare.

B. The application of these Bylaws is subject to all subchapters of the Act as most recently amended. In accordance with the Act [§4446], no land development or subdivision of land shall commence within the Town of Chester except in compliance with these Bylaws. Land development, as defined in Article 8, shall not include customary maintenance activities. Any land development and/or subdivision of land not specifically authorized under these Bylaws is prohibited, unless otherwise exempted under the Act or these Bylaws.

C. These Bylaws are not intended to repeal, annul or in any way impair any permit previously adopted or issued.

D. Where these Bylaws impose a greater restriction upon the use of a structure or land than is required by any other statute, ordinance, rule, regulation, permit, easement or agreement, the provision of these Bylaws shall control.

E. All land development shall be subject to all other applicable local, state and federal regulations.

1.4 INVALIDITY & SEVERABILITY
The invalidity of any provision of these Bylaws shall not invalidate any other part.

1.5 AMENDMENTS AND REPEAL
These Bylaws may be amended or repealed in accordance with the requirements and procedures established in the Act [§§ 4441, 4442]. An amendment or repeal of these Bylaws may be prepared by the Planning Commission or by any other person or body in accordance with the Act.

1.6 EFFECTIVE DATE OF BYLAWS
These Bylaws were adopted by the Selectboard on _____, 20__ after a public hearing on that date and in accordance with the Act [§4442]. These Bylaws are effective 21 days after their adoption by a majority of the Selectboard.

ARTICLE 2 – ESTABLISHMENT OF ZONING DISTRICTS & DISTRICT STANDARDS

2.1 CLASSES OF DISTRICTS

For the purposes of these Bylaws, the boundaries of districts are and shall be established as shown on the Zoning Map of the Town of Chester, which map is hereby declared to be part of these Bylaws, and the area of the Town of Chester is hereby divided into the following classes of districts:

VC - Village Center
RC - Residential/Commercial
CI - Commercial/Industrial
SV - Stone Village
R20 - Residential 20,000 square foot lots
R40 - Residential 40,000 square foot lots
A3 - Adapative 3
R3 - Residential 3 acre lots
CR - Conservation-Residential
F - Forest
APO - Aquifer Protection Overlay District
FDP - Flood Damage Prevention Overlay District

A full and detailed written description of the precise boundaries of all districts, which is a part of these Bylaws, is on file with the Town Clerk of the Town of Chester.

2.2 DISTRICT USES AND REQUIREMENTS

The following are district uses, lot size minimums, setbacks, frontage requirements and maximum coverage.

A. Permitted Uses

Permitted uses are those uses that can be approved by the Administrative Officer, without action of the Development Review Board. All permitted uses shall comply with the Parking and Sign Requirements for the District.

B. Conditional Uses

Specific Conditional Uses are permitted in each district only by approval of the Development Review Board provided that the general and specific standards and special criteria outlined in Section 4.5 of these Bylaws are met.

2.3 Village Center (VC) District

A. **Purpose**: To provide a mix of commercial, residential and civic uses that are consistent with the traditional compact Village Center as described in the Chester Town Plan. Development in this District is intended to be of the highest density in the Town, preserve historic character, and provide a pedestrian-friendly streetscape that accommodates public transportation.

B. **Permitted Uses**: The following land uses require a zoning permit issued by the Administrative Officer (see Section 7.2):

1. Accessory Dwelling Unit
2. Accessory Structure
3. Accessory Use (e.g. Home Child Care Facility, Home Occupation)
4. Agricultural/Forestry (See Sec. 4.2 Exemptions)
5. Residential – Single- and Two-Family

C. **Conditional Uses**: The following land uses require conditional use review by the Development Review Board (see Section 4.5) and a zoning permit issued by the Administrative Officer (see Section 7.2):

1. Arts & Entertainment
2. Civic / Institutional
3. Health Care Facility
4. Home Business
5. Mixed Use
6. Personal Service Shop
7. Professional Office
8. Recreation
9. Residential – Multi-Family
10. Restaurant
11. Retail Store
12. Tourist Lodging

D. **Dimensional Standards**:

Minimum Lot Size	20,000 sq ft
Minimum Lot Frontage	100 ft
Minimum Front Yard Setback	20 ft
Minimum Side Yard Setback	15 ft
Minimum Rear Yard Setback	15 ft
Maximum Lot Coverage	35%
Maximum Building Height	35 ft

E. **Supplemental Standards:**

1. **Building Orientation.** Buildings shall front toward and relate to frontage streets, both functionally and visually, and not be oriented toward parking lots. The front façade shall include the main entry-way and pedestrian access to the street.
2. **Character of Development.** New buildings and modifications of existing buildings shall be of a similar building mass and orientation as buildings in this District, and shall not unduly detract from the existing character of the Village. Where there are conflicts with existing adjoining buildings, building modifications or expansions of uses shall not increase the degree of conflict.
3. **Landscaping and Screening.** The Development Review Board shall require landscaping or other screening between incompatible uses or structures.

2.4 Residential-Commercial (R-C) District

A. **Purpose**: To provide a mix of higher-density residential and commercial uses in an area that is centrally located within municipal water and sewer service areas. Buildings are encouraged to be mixed-use, multi-story structures with entrances oriented toward the frontage street and existing sidewalk networks in order to provide pedestrian-oriented development that is consistent with the village character.

B. **Permitted Uses**: The following land uses require a zoning permit issued by the Administrative Officer (see Section 7.2):

1. Accessory Dwelling Unit
2. Accessory Structure
3. Accessory Use (e.g. Home Child Care Facility, Home Occupation)
4. Agricultural/Forestry (See Sec. 4.2 Exemptions)
5. Residential – Single- and Two-Family

C. **Conditional Uses**: The following land uses require conditional use review by the Development Review Board (see Section 4.5) and a zoning permit issued by the Administrative Officer (see Section 7.2):

1. Animal Hospital
2. Arts & Entertainment
3. Automotive Fuel/Service/Sales
4. Civic / Institutional
5. Health Care Facility
6. Home Business
7. Mixed Use
8. Personal Service Shop
9. Professional Office
10. Recreation
11. Residential – Multi-Family
12. Restaurants
13. Retail Store
14. Tourist Lodging

D. **Dimensional Standards**:

Minimum Lot Size	20,000 sq ft
Minimum Lot Frontage	120 ft
Minimum Front Yard Setback	25 ft
Minimum Side Yard Setback	15 ft; or 30 ft for non-residential uses abutting residential uses
Minimum Rear Yard Setback	15 ft; or 30 ft for non-residential uses abutting residential uses
Maximum Lot Coverage	35%
Maximum Building Height	35 ft

E. **Supplemental Standards:**

1. **Character of Development**. For the purposes of articulating the desired character of development, this zoning district is broken into three sub-districts:
   a) *Chester Depot/South Main Street*: New buildings and modifications of existing buildings shall be of a similar building mass and orientation as buildings in this sub-district, and shall not unduly detract from the existing character of the Village. Where there are conflicts with existing adjoining buildings, building modifications or expansions of uses shall not increase the degree of conflict.
   b) *Gassetts*: New development and redevelopment in this area shall continue in the current moderate density, with a mix of commercial, light industrial and residential uses. All new driveways and substantially reconstructed existing driveways shall meet the Agency of Transportation's *Access Management Program Guidelines*, as most recently adopted.
   c) *VT Route 103 South*: new buildings and modifications to existing buildings are encouraged to extend the historic pattern of higher density, mixed use village development that includes single and multi-family dwellings, civic and mixed use buildings (e.g., residential apartments over commercial storefronts), and new public greens all interconnected via pedestrian paths or sidewalks. The desired character of this area requires a shift from vehicle-oriented

development allowed under the former Zoning Bylaws, to a more pedestrian-friendly form of mixed use development. All new driveways and substantially reconstructed existing driveways shall meet the Agency of Transportation's *Access Management Program Guidelines*, as most recently adopted.

2. **Landscaping & Screening**. The Development Review Board shall require landscaping or other screening between incompatible uses or structures.
3. **Rail Oriented Uses**. No setbacks shall be required for railroad-related uses from any lot line that abuts the Railroad.

2.5 Commercial-Industrial (C-I) District

A. **Purpose**: To provide a mix of commercial and light industrial uses in an area that is served by municipal water and sewer service, and adjacent to two major highways and the Green Mountain Railroad.

B. **Permitted Uses**: The following land uses require a zoning permit issued by the Administrative Officer (see Section 7.2):

1. Accessory Dwelling Unit
2. Accessory Structure
3. Accessory Use (e.g. Home Child Care Facility, Home Occupation)
4. Agricultural/Forestry (See Sec. 4.2 Exemptions)

C. **Conditional Uses**: The following land uses require conditional use review by the Development Review Board (see Section 4.5) and a zoning permit issued by the Administrative Officer (see Section 7.2):

1. Animal Hospital
2. Automotive Fuel/Service/Sales
3. Civic/Institutional
4. Home Business
5. Industrial Facility
6. Professional Office
7. Recreation
8. Residential – Single-, Two- & Multi-Family
9. Restaurant
10. Retail Store

D. **Dimensional Standards**:

Minimum Lot Size	30,000 sq ft
Minimum Lot Frontage	120 ft
Minimum Front Yard Setback	30 ft
Minimum Side Yard Setback	25 ft; or 50 ft for non-residential uses abutting residential uses
Minimum Rear Yard Setback	25 ft; or 50 ft for non-residential uses abutting residential uses
Maximum Lot Coverage	50%
Maximum Building Height	35 ft

E. **Supplemental Standards:**

1. **Character of Development**. New development and modifications to existing buildings and uses shall be consistent with the existing character of the area and compatible with adjacent land uses with respect to traffic, noise, vibrations, or other impacts in conflict with residential and some commercial uses.
2. **Landscaping and Screening.** The Development Review Board shall require landscaping or other screening between incompatible uses or structures.
3. **Rail Oriented Uses**. No setbacks shall be required for railroad-related uses from any lot line that abuts the Railroad.

2.6 Stone Village (SV) District

A. **Purpose**: To preserve the unique historic character of the Stone Village while providing higher-density residential neighborhoods with compatible commercial and civic uses that are consistent with the Chester Town Plan.

B. **Permitted Uses**: The following land uses require a zoning permit issued by the Administrative Officer (see Section 7.2):

1. Accessory Dwelling
2. Accessory Structure
3. Accessory Use (e.g. Home Child Care Facility, Home Occupation)
4. Agricultural/Forestry (See Sec. 4.2 Exemptions)
5. Residential – Single- and Two-Family

C. **Conditional Uses**: The following land uses require conditional use review by the Development Review Board (see Section 4.5) and a zoning permit issued by the Administrative Officer (see Section 7.2):

1. Arts & Entertainment
2. Civic / Institutional
3. Home Business
4. Mixed Use
5. Professional Office
6. Recreation
7. Residential – Multi-Family
8. Retail Store
9. Tourist Lodging

D. **Dimensional Standards**:

Minimum Lot Size	30,000 sq ft
Minimum Lot Frontage	120 ft
Minimum Front Yard Setback	40 ft
Minimum Side Yard Setback	30 ft
Minimum Rear Yard Setback	30 ft
Maximum Lot Coverage	20%
Maximum Building Height	35 ft

E. **Supplemental Standards:**

1. **Character of Development.** New buildings and modifications of existing buildings shall be of a similar building mass and orientation as buildings in this District, and shall not unduly diminish the character of the Stone Village. External building materials are not required to be stone; however, all materials shall be compatible with the existing architecture in this District. Where there are conflicts with existing adjoining buildings, building modifications or expansions of uses shall not increase the degree of conflict.

2.7 Residential 20,000 (R20) District

A. **Purpose**: To provide higher-density residential neighborhoods with a mix of housing types and compatible commercial and civic uses that are consistent with the Chester Town Plan.

B. **Permitted Uses**: The following land uses require a zoning permit issued by the Administrative Officer (see Section 7.2):

1. Accessory Dwelling
2. Accessory Structure
3. Accessory Use (e.g. Home Child Care Facility, Home Occupation)
4. Agricultural/Forestry (See Sec. 4.2 Exemptions)
5. Residential – Single- and Two-Family

C. **Conditional Uses**: The following land uses require conditional use review by the Development Review Board (see Section 4.5) and a zoning permit issued by the Administrative Officer (see Section 7.2):

1. Civic / Institutional
2. Home Business
3. Mixed Use
4. Professional Office
5. Recreation
6. Residential – Multi-Family
7. Retail Store
8. Tourist Lodging

D. **Dimensional Standards**:

	Class 1	**Class 2**
Minimum Lot Size	20,000 sq ft	30,000 sq ft
Minimum Lot Frontage	120 ft	150 ft
Minimum Front Yard Setback	25 ft	25 ft
Minimum Side Yard Setback	20 ft	20 ft
Minimum Rear Yard Setback	20 ft	20 ft
Maximum Lot Coverage	20%	20%
Maximum Building Height	35 ft	35 ft

NOTES:
Class 1 = Municipal Water & Sewer Services
Class 2 = On-Site Water and/or Wastewater

E. **Supplemental Standards:**

1. **Character of Development**. New development in this District shall be consistent with residential neighborhoods that are within walking distance of the village, and should be compatible with a circulation system to accommodate pedestrians and other non-motorized travel. The portion of this District along VT Route 103 is intended to provide a cluster of residential uses that breaks up the commercial uses allowed in the R-C District found both to the east and west in order to maintain village character and avoid strip commercial development.

2.8 Residential 40,000 (R40) District

A. **Purpose**: To provide moderate-density residential neighborhoods with compatible commercial and civic uses that are consistent with the Chester Town Plan.

B. **Permitted Uses**: The following land uses require a zoning permit issued by the Administrative Officer (see Section 7.2):

1. Accessory Dwelling
2. Accessory Structure
3. Accessory Use (e.g. Home Child Care Facility, Home Occupation)
4. Agricultural/Forestry (See Sec. 4.2 Exemptions)
5. Residential – Single- and Two-Family

C. **Conditional Uses**: The following land uses require conditional use review by the Development Review Board (see Section 4.5) and a zoning permit issued by the Administrative Officer (see Section 7.2):

1. Animal Hospital
2. Animal Kennel
3. Civic / Institutional
4. Extraction Operations
5. Home Business
6. Nursery
7. Professional Office
8. Recreation
9. Residential – Multi-Family
10. Tourist Lodging

D. **Dimensional Standards**:

Minimum Lot Size	40,000 sq ft
Minimum Lot Frontage	120 ft
Minimum Front Yard Setback	40 ft
Minimum Side Yard Setback	30 ft
Minimum Rear Yard Setback	30 ft
Maximum Lot Coverage	20%
Maximum Building Height	35 ft

E. **Supplemental Standards:**

1. **Character of Development**. All new driveways and substantially reconstructed existing driveways along VT Routes 11 and 103 shall meet the Agency of Transportation's *Access Management Program Guidelines*, as most recently adopted.

2.9 Adaptive 3 (A3) District

A. **Purpose**: To provide property owners in this lower-density district, who are served by municipal water but not municipal sewer, the opportunity to take advantage of existing facilities as well as have potential for the creation of commercial and light industrial uses.

B. **Permitted Uses**: The following land uses require a zoning permit issued by the Administrative Officer (see Section 7.2):

1. Accessory Dwelling
2. Accessory Structure
3. Accessory Use (e.g. Home Child Care Facility, Home Occupation)
4. Agricultural/Forestry (See Sec. 4.2 Exemptions)
5. Residential – Single- and Two-Family

C. **Conditional Uses**: The following land uses require conditional use review by the Development Review Board (see Section 4.5) and a zoning permit issued by the Administrative Officer (see Section 7.2):

1. Animal Hospital
2. Animal Kennel
3. Light Industrial
4. Home Business
5. Nursery
6. Professional Office
7. Recreation
8. Residential – Multi-Family
9. Tourist Lodging
10. Health Care Facility
11. Restaurant
12. Civic/Institutional

D. **Dimensional Standards**:

Minimum Lot Size	3 acres
Minimum Lot Frontage	200 ft
Minimum Front Yard Setback	50 ft
Minimum Side Yard Setback	50 ft
Minimum Rear Yard Setback	50 ft
Maximum Lot Coverage	10%
Maximum Building Height	35 ft

E. **Supplemental Standards:**

1. **Character of Development**. Future growth is encouraged. Open space and recreational resources should be preserved wherever possible.

2.10 Residential 3 (R3) District

A. **Purpose**: To provide lower-density residential neighborhoods with compatible home businesses and working landscape uses that are consistent with the Chester Town Plan.

B. **Permitted Uses**: The following land uses require a zoning permit issued by the Administrative Officer (see Section 7.2):

4. Accessory Dwelling
5. Accessory Structure
6. Accessory Use (e.g. Home Child Care Facility, Home Occupation)
5. Agricultural/Forestry (See Sec. 4.2 Exemptions)
6. Residential – Single- and Two-Family

C. **Conditional Uses**: The following land uses require conditional use review by the Development Review Board (see Section 4.5) and a zoning permit issued by the Administrative Officer (see Section 7.2):

5. Animal Hospital
6. Animal Kennel
7. Extraction Operations
8. Home Business
9. Nursery
10. Professional Office
11. Recreation
12. Residential – Multi-Family
13. Tourist Lodging
14. Civic/Institutional

D. **Dimensional Standards**:

Minimum Lot Size	3 acres
Minimum Lot Frontage	200 ft
Minimum Front Yard Setback	50 ft
Minimum Side Yard Setback	50 ft
Minimum Rear Yard Setback	50 ft
Maximum Lot Coverage	10%
Maximum Building Height	35 ft

E. **Supplemental Standards:**

1. **Character of Development**. Future growth is encouraged to follow the traditional patterns by concentrating in higher densities at historic crossroad areas. Open space and recreational resources should be preserved wherever possible.

2.11 Conservation-Residential (C-R) District

A. **Purpose**: To conserve large parcels or tracts of land that are valuable for working landscape related uses, including forestry. In keeping with the Town Plan goals to retain rural character as well as to serve as habitat for wildlife and outdoor recreational uses, these areas are slated for very low density development. This may be accomplished through cluster development or development for residential purposes of that land that is marginal for agricultural use.

B. **Permitted Uses**: The following land uses require a zoning permit issued by the Administrative Officer (see Section 7.2):

1. Accessory Dwelling
2. Accessory Structure
3. Accessory Use (e.g. Home Child Care Facility, Home Occupation)
6. Agricultural/Forestry (See Sec. 4.2 Exemptions)
7. Residential – Single- and Two-Family

C. **Conditional Uses**: The following land uses require conditional use review by the Development Review Board (see Section 4.5) and a zoning permit issued by the Administrative Officer (see Section 7.2):

1. Animal Kennel
2. Extraction Operations
3. Home Business
4. Nursery
5. Recreation
6. Civic/Institutional

D. **Dimensional Standards**:

Minimum Lot Size	5 acres
Minimum Lot Frontage	250 ft
Minimum Front Yard Setback	50 ft
Minimum Side Yard Setback	50 ft
Minimum Rear Yard Setback	50 ft
Maximum Lot Coverage	10%
Maximum Building Height	35 ft

E. **Supplemental Standards:**

1. **Character of Development**. New buildings shall be designed in order to maintain the rural character of this District.

2.12 Forest (F) District

A. **Purpose**: To conserve public lands used for drinking water protection, forestry and public recreational activities.

B. **Permitted Uses**: The following land uses require a zoning permit issued by the Administrative Officer (see Section 7.2):

1. Agricultural and Forestry Uses (See Sec. 4.2 Exemptions)

C. **Conditional Uses**: The following land uses require conditional use review by the Development Review Board (see Section 4.5) and a zoning permit issued by the Administrative Officer (see Section 7.2):

1. Extraction Operations
2. Recreation

2.13 Aquifer Protection Overlay (APO) District

A. **Purpose**: The purpose of the Aquifer Protection Overlay (APO) District is to protect public health and safety by preserving and protecting the municipal drinking water source from land uses that pose a threat to ground water contamination within two designated subdistricts:

1. **Primary Protection Area**: Defined as the areas around the public water supply wells. For the Jeffrey Well, the primary protection area is the 200 foot radius source isolation zone. For the Canal Street Well, the primary protection area is the area enclosed within a 200 foot radius circle around the well.

2. **Secondary Protection Area**: Established as the remainder of the APO not included in the Primary Protection Area, but deemed necessary to ensure adequate protection of public drinking water supplies.

B. **Primary Protection Area**:

1. **Permitted Uses**: The following uses are allowed within the Primary Protection Area provided they meet the appropriate supplemental standards outlined in Section 2.12D below and are designed so as to prevent any groundwater contamination:
   a. Parks, greenways, or publicly-owned recreational areas such as foot and bicycle paths, playgrounds, ball fields and tennis courts.
   b. Public drinking water supply related facilities, including the construction, maintenance, repair, and enlargement of source, treatment, storage, pumping, or distribution facilities.
   c. Conservation efforts for soil, water, plants, and wildlife.

2. **Conditional Uses**: All other uses allowed by the underlying zoning districts (unless specifically prohibited by the Vermont Water Supply Rule) are subject to a conditional use permit, and must conform to the provisions of the underlying zoning district and meet the performance standards outlined in Section 2.12E below. Non-conforming uses may only be expanded to the extent permitted by the underlying zoning district, and their expansion must conform to the supplemental standards outlined in Section 2.12E and the Vermont Water Supply Rule.

C. **Secondary Protection Area**:

1. **Permitted Uses**: All permitted uses allowed in the underlying zoning districts require a zoning permit issued by the Administrative Officer (see Section 7.2), and must meet the supplemental standards outlined in Section 2.12E.

2. **Conditional Uses**: All conditional uses allowed in underlying zoning districts require conditional use review by the Development Review Board (see Section 4.5) and a zoning permit issued by the Administrative Officer (see Section 7.2), and must meet the supplemental standards outlined in Section 2.12E.

3. All uses shall comply with the Vermont Water Supply Rule.

D. **Dimensional Standards**: Dimensional standards shall be as established for underlying zoning districts.

E. **Supplemental Standards:**

1. Any facility or operation that involves collection, handling, manufacture, use, storage, transfer or disposal of hazardous materials or hazardous wastes must have a secondary containment system that is easily inspected and whose purpose is to intercept any leak or release from the primary

containment vessel or structure. Underground tanks or buried pipes carrying such materials must have double walls and inspectable sumps.

2. Open liquid waste ponds containing hazardous material or hazardous wastes will not be permitted without a secondary containment system.
3. Storage of petroleum products shall have a secondary containment system or be stored in a basement without floor drains.
4. All permitted facilities must adhere to appropriate federal and state standards for storage, handling and disposal of any hazardous material or hazardous waste.
5. All facilities or operations must prepare an acceptable contingency plan for preventing hazardous materials and/or hazardous wastes from contaminating the shallow/surficial aquifer should floods, fire, or other natural catastrophes, equipment failure, or releases occur:
   a. All facilities or operations shall include, but not be limited to a monitoring system and secondary standpipe above the 100-year flood control level, for monitoring and recovery. For above-ground conditionally permitted facilities, an impervious dike, above the 100-year flood level and capable of containing 110 percent of the largest volume of storage, will be provided with an overflow recovery catchment area (sump).
   b. All facilities or operations shall include firefighting plans and procedures, a fire retarding system, and provide for dealing safely with any other health and technical hazards that may be encountered by disaster control personnel in combating fire. Hazards to be considered are pipes, hazardous materials, hazardous wastes, or open flames in the immediate vicinity.
   c. For equipment failures, plans for all facilities or operations that use, maintain, store, process or produce hazardous materials and/or hazardous wastes shall include, but not be limited to, below-ground level, removal and replacement of leaking parts, a leak detection system with monitoring, and an overfill protection system; and above-ground level, liquid and leaching monitoring of primary containment systems, the replacement or repair and cleanup and/or repair of the impervious surface.
   d. For any other release occurring, the owner and/or operator shall report all incidents involving liquid or chemical material to the Town of Chester.
6. Since it is known that improperly abandoned wells can become a direct conduit for contamination of groundwater by surface water, all abandoned wells shall be properly plugged according to local and state regulations.

2.14 FDP – Flood Damage Prevention District

A. Development Permit Required

A permit is required, to the extent authorized by State law, for all proposed construction or other development, including the placement of manufactured homes, in areas of special flood hazard. Conditional use approval (see Section 4.5) by the Development Review Board (DRB) is required for:

1. New buildings,
2. Substantial improvement of existing buildings, and
3. Development in a floodway;

prior to being permitted by the Administrative Officer. All development and subdivisions shall be reviewed to assure that such proposals minimize potential flood damage, public facilities and utilities such as sewer, gas, electrical, and water systems are constructed so as to minimize flood damage, and adequate drainage is provided to reduce exposure to flood hazards.

Note: All development in SFHAs needs a permit and thus notice to the state NFIP Coordinator (Section 7.1.B.2.k) even if not subject to conditional use review.

B. Lands to Which These Bylaws Apply

These Bylaws shall apply to all areas in the Town of Chester, Vermont identified as areas of special flood hazard, also referred to as Special Flood Hazard Areas (SFHA), in and on the most current flood insurance studies and maps published by the Department of Homeland Security (DHS), Federal Emergency Management Agency (FEMA), National Flood Insurance Program (NFIP), as provided by the Secretary of the Agency of Natural Resources pursuant to 10 V.S.A. § 753, which are hereby adopted by reference and declared to be part of these Bylaws.

The Flood Insurance Study and maps are on file in the Chester Town Offices.

C. Warning of Disclaimer of Liability

These Bylaws do not imply that land outside of the areas of special flood hazard or land use permitted within such districts will be free from flooding or flood damages. These Bylaws shall not create liability on the part of the Town of Chester or any town official or employee thereof for any flood damages that result from reliance on these Bylaws or any administrative decision lawfully made thereunder.

ARTICLE 3 – GENERAL USE STANDARDS

The following zoning standards apply to all uses and structures as specified within the Town of Chester.

3.1 ACCESSORY DWELLING UNIT

A single accessory dwelling unit, as defined in these Bylaws, shall be a permitted use.

3.2 BROADCAST FACILITIES

Broadcast facilities, as defined by these Bylaws, shall conform to the following provisions:

A. All broadcast facilities shall be licensed by the Federal Communications Commission.
B. Commercial Broadcast Facilities:
   1. Shall be allowed in all districts upon receiving Conditional Use approval from the Development Review Board and issuance of a Zoning Permit.
   2. Any installation or construction of, or significant addition or modification to, such facilities requires approval under Section 4.5, unless determined to be of de minimis impact under Subsection F below.
   3. Commercial broadcast facilities are exempt from the height standards listed in Article 2. The facility will not project more than 20 feet above the average elevation of the tree line measured within 50 feet of the highest vertical element of the facility, unless the proposed elevation is reasonably necessary to provide adequate wireless telecommunication service capacity or coverage or to facilitate collocation of facilities.
   4. Antennae and towers shall meet a setback distance from the property lines equal to the height of the antennae or tower. Setbacks are measured from the base of the structure, not guy wires.
   5. Landscaping may be required around the base of all antennae and towers.
C. Private Broadcast Facilities (e.g. ham radio facilities):
   1. Shall be allowed in any district upon issuance of a Zoning Permit.
   2. Antennae and towers shall be located in back yards and shall meet a setback distance equal to the height of the antennae or tower.
E. In accordance with §4412(8) of the Act, the following facilities are exempt from these Bylaws:
   1. Telecommunications facilities that are subject to review by the Public Service Board under 30 V.S.A. §248a.
   2. Antenna structures less than 20 feet in height with its primary function to transmit or receive communication signals for commercial, industrial, institutional, nonprofit or public purposes.
   3. No permit shall be required for placement of an antenna used to transmit, receive, or transmit and receive communications signals on that property owner's premises if the area of the largest face of the antenna is not more than 15 square feet, and if the antenna and any mast support do not extend more than 12 feet above the roof of that portion of the building to which the mast is attached, except to the extent bylaws protect historic landmarks and structures listed on the state or national register of historic places.
F. De Minimis Impacts:
   1. All applications for broadcast facilities shall be reviewed by the Town of Chester Zoning Administrator to determine if the facility will impose no impact or de minimis impact. A de minimis impact exists if the project meets the following criteria:
      a. Project consists of either:
         i. Collocation on a legally existing tower;
         ii. Upgrades to legally existing equipment; or,
         iii. Similar projects.
      b. Project does not involve:
         i. New towers;

ii. Extending the height of existing towers;
iii. New access roads or expansions of existing access roads; or,
iv. Similar projects.

2. The Zoning Administrator's determination regarding no impact or de minimis impact shall be in writing and shall be subject to appeal to the Development Review Board in accordance with 24 V.S.A. §4465. Furthermore, the Zoning Administrator shall mail a copy of any positive determination to all abutting landowners.
3. If the Zoning Administrator determines that a Facility will have more than a de minimis impact under the criteria established in this Section, the Zoning Administrator shall refer the application to the Development Review Board for review as a conditional use.

3.3 CAMPING/TRAVEL TRAILER, PICK-UP COACH, MOTOR HOME AND TENT SITE PARK

A. Parks for camping in travel trailers, campers or tents are subject to conditional use review by the Development Review Board. Specific requirements for approval shall be based on the standards listed below. All campgrounds must provide individual camp sites that meet the following standards:
   1. Each camp site must provide a minimum area of 2,500 square feet; and,
   2. A minimum width of 25 feet must be provided for each camp site.
B. Nothing in this section shall prevent a property owner from parking his/her own camping trailer on his/her property.

3.4 CHANGE OR EXPANSION OF USE

A. The conversion of an accessory structure into another use will be reviewed under the procedures for the proposed new use for the zoning district in which it is located (e.g. permitted use or conditional use).
B. Any enlargement or alteration of a permitted use that involves the creation of new floor space or outdoor storage space, requires additional on-site parking or has different minimum lot size or dimensional requirements will require a zoning permit issued by the Administrative Officer under Section 7.2.
C. Any enlargement or alteration of a conditional use shall be reviewed as a conditional use by the Development Review Board to permit the specifying of new conditions.

3.5 COMPLIANCE WITH BYLAWS

Any land, building or premises, or part thereof may be used only for purpose listed under Article 2 of these Bylaws applicable to the district in which it is located. See Section 7.2 for further individual permit requirements.

3.6 DAMAGED STRUCTURES

Within one year after any building or structure has burned, collapsed or otherwise been destroyed or demolished, and creates a public hazard as determined by the Selectmen, all structural materials shall be removed from the site and the excavation thus remaining shall be covered or filled to existing grades. Nothing in this Regulation shall prevent reconstruction or restoration within two (2) years of a building damaged by fire, accident, or act of God, to its condition prior to such damage. Such reconstruction shall be considered a permitted use and shall require a permit. Substantial completion must be completed within two years of the incident. An applicant may apply for approval of an extension to allow more time for substantial completion to be reviewed by the Development Review Board under conditional use review. Nothing in this section shall be construed to restrict the authority of the Town of Chester to abate a nuisance or to abate or remove public health risks or hazards. (See Section 3.19 for Nonconforming Structures.)

3.7 EROSION CONTROL & DEVELOPMENT ON STEEP SLOPES

A. **Purpose.** The purpose of these regulations is to protect areas of steep slope within the Town of Chester from the adverse impacts of development as necessary to:

1. Provide safe, stable development sites;
2. Prevent landslides, slope failure and soil instability;
3. Prevent soil erosion;
4. Minimize stormwater runoff and prevent flooding;
5. Control sedimentation and prevent water quality degradation.

B. **Erosion Prevention and Sediment Control**. All development activities shall take the appropriate measures for erosion prevention and sedimentation control during construction in accordance with the Vermont Erosion Prevention and Sediment Control Field Guide and/or The Low Risk Site Handbook for Erosion Prevention and Sediment Control, as most recently amended. The Development Review Board may require a grading, erosion prevention and sediment control plan under conditional use and/or planned unit development review procedures.

C. **Steep Slopes (over 25%)**. Development shall be located to minimize adverse impacts to steep slopes over 25% (or 4:1 slopes). Where development on steep slope areas is necessary due to extreme limitations of the lot, conditional use approval under Section 4.5 shall be required. Development that creates new areas of steep slope (over 25% or 4:1) or retaining walls 5 feet in height or taller (or 5 feet in combined height if a series of terraced retaining walls are planned) shall also be subject to these provisions. The DRB may establish development envelopes, and may limit clearing, excavation and/or filling on such lands. The DRB may require the preparation of grading and erosion control plans by a Vermont licensed engineer for the property as part of a complete application and implementation of that plan as a condition of approval.

D. **Exemptions**. The following are specifically exempted from the requirements of this Section:

1. Proposed development that disturbs areas of 1,000 square feet or less;
2. Hiking, mountain biking, skiing or other non-motorized trails and related structures, such as foot bridges and stairs;
3. Snowmobile trails;
4. Accepted agricultural and silvicultural practices in accordance with the Act [§4413(d)] (See Article 6);

3.8 EQUAL TREATMENT OF HOUSING

In accordance with §4412(1), no provision of these Bylaws shall have the effect of excluding the following housing from the Town of Chester:

A. Housing to meet the needs of the population as determined in the Housing Chapter of the *Chester Town Plan* as required under §4382 (a)(10).

B. Pursuant to 24 V.S.A. § 4412 (1)(B), a mobile home, modular housing or other forms of prefabricated housing shall be considered a single-family dwelling and shall meet the same zoning requirements applicable to single-family dwellings, except when unoccupied and displayed in a mobile home sales establishment or allowed as a temporary structure under these Bylaws.

C. Mobile Home Parks as defined in 10 V.S.A. Chapter 153 (see §§ 3.13-3.15) as allowed within designated zoning districts under these Bylaws.

D. Multi-unit or multi-family dwellings, as allowed within designated zoning districts under these Bylaws.

E. One accessory dwelling as a permitted use that is located within or appurtenant to a principal single family dwelling (see §3.1).

F. A residential care home or group home, to be operated under state licensing or registration, serving not more than eight (8) persons who have a handicap or disability as defined by the state [9 V.S.A. § 4501] (see §3.25).

3.9 EXTRACTION OPERATIONS

A. The removal of soil, sand, rock, stone or gravel is subject to approval by the Development Review Board under conditional use review and findings that the proposed activity meets the standards below.
B. In addition to the application requirements under Article 4, the applicant shall also submit plans showing existing grades, drainage and depth to the water table, buffers to adjacent parcels, the extent and magnitude of the proposed operation including project phasing, and finished grades and site restoration at the conclusion of the operation.
C. The following requirements shall be met for all extraction operations:
   1. When the removal of materials is completed, the finished grades, as specified in the plan and approved, are covered with not less than four (4) inches of top soil and seeded with a suitable cover crop, except when ledge rock is exposed.
   2. A bond is posted with the Treasurer of the Town of Chester by the applicant in an amount approved by the Selectmen as sufficient to guarantee conformity with the provisions of this section.
   3. Any soil, sand or gravel operation in existence at the time of adoptions of these Bylaws shall not be subject to the provisions of this section except that such operation shall not extend beyond the then existing boundaries of the parcel of land until a permit has been issued.
   4. No strip mining is permitted.
   5. No actual quarrying or mining shall be carried on in a zone one hundred (100) feet from the highway as well as one hundred (100) feet from all abutting property in different ownership, unless written agreement has been obtained from any abutting property owner involved.
   6. Any raw materials rejected from permitted operations which are piled on the land shall be screened from public view and shall not impede the flow nor pollute the waters of ponds and streams; such accumulations shall be graded to stable contour and shall be restored to vegetative cover.
D. In granting approval, the Development Review Board may consider and impose conditions with respect to the following factors, as it deems appropriate:
   1. Depth of excavation or quarrying above the water table;
   2. Slopes created by removal;
   3. Effects on surface drainage on and off-site;
   4. Storage of equipment and stockpiling of materials on-site;
   5. Hours of operation for blasting, trucking, and processing operations;
   6. Effects on neighboring properties due to blasting, excavation or crushing activities, or other noise, dust, or vibration;
   7. Creation of nuisances or safety hazards;
   8. Effects on traffic and road conditions, including potential physical damage to public highways;
   9. The rate of extraction and number and frequency of truck trips;
   10. Temporary and permanent erosion control;
   11. Effect on ground and surface water quality, and drinking water supplies;
   12. Effect on natural, cultural, historic, or scenic resources on-site or in the vicinity of the project;
   13. Effect on agricultural land; and
   14. Site reclamation.

3.10 FAMILY CHILD CARE

A. **Family Child Care Home**: A family child care home, as defined herein in these Bylaws, serving six or fewer children shall be considered to constitute a permitted single family residential use of

property. A family child care home, as defined in these Bylaws, serving no more than six full-time children and four part-time children, shall be considered to constitute a permitted use of property but requires site plan approval based on local zoning requirements.

B. **Family Child Care Facility**: A family child care facility, as defined in these Bylaws, shall be considered to be a conditional use and be subject to all applicable municipal bylaws for conditional uses.

3.11 HOME OCCUPATION

No regulation herein shall infringe upon the right of any resident to use a minor portion of a dwelling for an occupation which is customary in residential areas and which does not have an undue adverse effect on the character of the neighborhood. The primary use of the premises shall be that of a private residence, and the home occupation shall be carried on in the residence or in a typical accessory building. Disturbances such as noise, vibration, smoke, dust, odors, heat, glare, and electrical interference or line voltage variations shall not be produced. On-street parking is not permitted, nor shall the exterior of the building be altered to take on a commercial aspect. The above limitations shall not apply to agricultural uses. Home occupations are allowed as permitted, accessory uses in all districts where residential uses are permitted.

3.12 HOME BUSINESS

No regulation herein shall infringe upon the right of any resident to use a minor portion of a dwelling for a Home Business which is customary in residential areas and which does not have an undue adverse effect on the character of the neighborhood. The Home Business shall be carried on by members of the family in a minor portion of the dwelling or in an accessory building. Four (4) full time equivalent on-premise employees who are not part of the family are permitted. Disturbances such as noise, vibration, smoke, dust, odors, heat, glare, and electrical interference or line voltage variations shall not be produced at a level which is seriously objectionable or out of character with the neighborhood.

Home Business is allowed as an accessory use, subject to conditional use review, in all districts where residential uses are permitted subject to the following provisions:

1. The home business shall be clearly incidental and secondary to the residential use of the property, and shall be conducted wholly within the principal or accessory structures;
2. The home business shall be carried on by members of the family residing in the dwelling unit. Four additional full time equivalent employees who are not members of the family are permitted;
3. No traffic shall be generated which would be uncharacteristic of the neighborhood;
4. Exterior displays, exterior storage of materials, and exterior indications of the home business or variation from the residential character of the principal or accessory structures may be prohibited. (See Section 3.27(D)(8) for home business/industry sign standards.)

3.13 LANDSCAPING AND SCREENING REQUIREMENTS

A. Landscaping is required in all districts, except for one or two-family dwellings, to be installed and maintained in yards and shall take the form of shade trees, deciduous shrubs, evergreens, grassed areas and ground cover. No landscaping shall create a traffic hazard.

B. A three-year landscaping maintenance plan and/or a bond or other surety to ensure installation and maintenance may be required by the Development Review Board and incorporated as a condition of approval under conditional use review.

3.14 LOT AND YARD REQUIREMENTS

Each lot shall have an area, frontage, and frontyard, sideyard and rearyard setbacks as required by these Bylaws. Buildings and/or structures shall not occupy in the aggregate a greater percentage of the lot area,

nor be greater in height, than is provided herein.

(A) **Required Lot and Yard Areas:** In calculating the required area, width or depth of a lot, the area of existing and proposed road rights-of-way shall be excluded. Space required under these Bylaws to satisfy yard, area or other open space requirements in relation to one building shall not be counted as part of any required lot, yard or other open spaces for any other building.

(B) **Corner Lots:** Lots at an intersection of streets shall have the required frontage on both streets. Any yard adjoining a street shall be considered a front yard for the purposes of these Bylaws. All front yards shall meet the setback requirements of these Bylaws.

(C) **Setbacks**:

1. Shall apply to the principle building and all accessory buildings and structures.
2. Will be measured from the edge of the front roadway or neighboring lot line, in a straight line from a right angle to the nearest point of the building or structure.
3. In the event of a corner lot, all sides facing the roadway(s) will be considered front yards.
4. In the event there is no discernible edge of roadway, the boundary line recorded in town records will be used.
5. Nothing herein will prevent the projection of eves, chimneys, cornices, uncovered steps, unroofed porches less than 32 square feet, window sills and other such projections into any required yard or open space, provided that such projection does not extend more than four feet into such yard or open space.
6. Any type of covering – including but not limited to retractable awnings or wooden, metal, fiberglass lattice work that requires support of any kind – over a deck, steps or porch is considered part of the structure and will be included in the minimum setback measurement.
7. Driveways are allowed within side and rear yard setbacks, and not included in the boundary measurements.
8. Structures, regardless of material, which are intended to cover over and shield any type of vehicle shall be included in the boundary measurements.
9. In the event of a cul-de-sac, the front yard setback shall be measured from the tangent line used to measure frontage.
10. Fences and walls, provided they are no higher than six (6) feet are not considered in the setback measurement.

(E) **Lots**: A lot shall be of sufficient size to meet minimum zoning requirements for use, coverage and area, and to provide such yards and other open spaces as are herein required. Such lots shall have frontage on a street, or other means of permanent access approved by the Development Review Board. In no case shall the division or combination of any lands result in the creation of a parcel which does not meet the requirement of these Bylaws.

(F) **Frontage**: All new subdivided lots shall have the required contiguous road frontage or right-of-way frontage for the district in which located. Lot frontage on a cul-de-sac may be reduced by the Development Review Board under conditional use review if the opinion of the Development Review Board the reduction of the lot frontage will result in a better utilization of land. In no event shall the lot frontage in a cul-de-sac be less than 50'.

3.15 LOW AND MODERATE INCOME HOUSING

No provision of this bylaw may have the effect of excluding from the municipality housing to meet the needs of the population as determined in accordance with 24 V.S.A. § 4382(c).

3.16 MOBILE HOME PARK

Mobile homes are allowed in approved mobile home parks subject to the requirements of this section and state law. Mobile home parks are allowed as a conditional use in the R40 and R3 districts (See Article 2). New mobile home parks and any addition or alteration to an existing mobile home park, requires conditional use and site plan review and approval by the Development Review Board. The following requirements shall apply to mobile home parks:

1. All mobile home parks are subject to the State Regulations for mobile home parks.
2. All mobile home parks shall be processed under the Planned Unit Development provisions.
3. A minimum of 12,000 square feet of lot area per mobile home is required.
4. Minimum setbacks for the mobile home on each plot are: 20 feet setback from the plot boundary facing the access road or driveway and 20 feet side and rear yard setback from the each side and the rear plot boundaries.
5. All mobile home parks shall provide a minimum 20% of the total land area as common open space for recreational purposes.
6. Site Plan improvements at a minimum must provide for:
   a. Facilities and amenities appropriate to the needs of the occupants.
   b. Safe, comfortable and sanitary use by the occupants under all weather conditions.
   c. Practical and efficient operation and maintenance of all common facilities.
   d. Common open space accessible to all residents of the mobile home park.
   e. Sufficient landscaping or other screening to provide visual or acoustic privacy for residents of adjacent units.
7. All mobile home parks shall meet minimum setback requirements for the zoning district in which they are located (see Article 2). These setback areas shall serve as a landscaped buffer between the mobile home park and adjacent parcels and public rights-of-way.

3.17 MOBILE HOME STORAGE

A temporary Zoning Permit for one (1) year from the effective date of the permit for the storage of a mobile home may be issued by the Administrative Officer. Such mobile homes shall not be connected to sewage or water facilities, and shall not be used as a dwelling for the duration of the temporary permit. Only one renewal of the temporary permit for one (1) additional year, with payment of the appropriate permit fee to the Town of Chester, is permitted.

3.18 MOBILE HOME(S) FOR AGRICULTURAL EMPLOYEES

Mobile homes sited on a parcel for housing of agricultural employees, as provided in Title 10 VSA § 6201(2), must meet setback requirements of the district in which the parcel is located.

3.19 NON-CONFORMITIES

(A) **Existing Nonconformities.** Nothing in this section shall be construed to restrict the authority of the Town of Chester to abate public nuisances or to abate or remove public health risks or hazards. Any lawful lot, building or use in existence at the time of adoption or amendment of these Bylaws may be continued. Such lot, building or use shall meet all other requirements of these Bylaws, and is subject to the following provisions.

(B) **Nonconforming Lots**

1. Any existing lawful lot that does not meet the specified dimensional requirements in these Bylaws, may be maintained and developed for the purposes permitted in that district as long as all other requirements for that district are met.
2. **Existing Small Lots.** In accordance with the Act [§ 4412], any lot that is legally subdivided, is in individual and separate and nonaffiliated ownership from surrounding properties, and is in existence on the date of enactment of this bylaw, may be developed for the purposes permitted in

the district in which it is located, even though the lot does not conform to minimum lot size requirements of the district in which the lot is located, provided such lot is not less than one eighth acre or has a minimum width or depth dimension of at least 40 feet.

If an existing small lot subsequently comes under common ownership with one or more contiguous lots, the nonconforming lot may be separately conveyed if the lots are conveyed in their preexisting, nonconforming configuration, provided such lot is not less than one eighth acre or has a minimum width or depth dimension of at least 40 feet.

(C) **Nonconforming Structures**

1. Any legal structure or part thereof, which is not in conformance with the provisions of these bylaws concerning setback, height, size, or other structural requirements (including such things as parking, lighting, buffers, and lowest floor elevation in floodplain zoning) shall be deemed a nonconforming structure. Legal nonconforming structures exist as a result of construction prior to adoption of bylaws, or construction under an earlier set of less restrictive bylaws. Any nonconforming structure may be allowed to exist indefinitely, but shall be subject to the following provisions:
   a. Subject to conditional use approval by the DRB, a nonconforming structure may be restored or reconstructed after unintentional loss provided the reconstruction is commenced within two years and does not increase the degree of non-conformance that existed prior to the damage.
   b. A nonconforming structure which has been demolished shall not be reconstructed except in conformance with these bylaws. The DRB may grant a waiver from this provision if a hardship would be created by rebuilding in strict conformance with the requirements of these bylaws. In considering a waiver from these provisions, the DRB shall take into consideration the ability of the applicant to use remaining features of the property such as foundation, water supply, sewage disposal system, underground utilities, etc.
   c. A nonconforming structure shall not be moved, altered, extended, or enlarged in a manner which will increase the existing degree of non-conformance.
   d. The phrase 'shall not increase the degree of non-conformance' shall be interpreted to mean that the portion of the structure which is nonconforming shall not increase in size (or decrease in the event of failing to meet minimum standards such as parking and lighting). Therefore, portions of a structure within a setback area cannot be enlarged, portions above the maximum height cannot be expanded where parking is deficient the number or size of spaces cannot be reduced, etc. This phrase is not intended to prevent existing unfinished space from being finished or other similar scenarios provided there is no increase in size.
   e. Nothing in this section shall be deemed to prevent normal maintenance and repair of a nonconforming structure provided that such action does not increase the degree of non-conformance.
   f. The DRB shall permit the alteration or expansion of a nonconforming structure for the sole purpose of conformance with mandated environmental, safety, health, or energy codes.

(D) **Nonconforming Uses**

1. Any use, which does not conform to uses allowed in the district in which it is located or is otherwise not in conformance with the provisions of these bylaws, shall be deemed a nonconforming use. Nonconforming uses are those that exist legally as a result of existing prior to adoption of bylaws, or permitted under an earlier set of less restrictive bylaws. Any nonconforming use may be continued indefinitely, but shall be subject to the following provisions:
   a. The nonconforming use shall not be changed to another nonconforming use without approval by the DRB, and then only to a use that, in the opinion of the DRB, is of the same or of a more conforming nature.

b. The nonconforming use shall not be re-established if such use has been discontinued for a period of two-years or has been changed to, or replaced by, a conforming use. Intent to resume a nonconforming use shall not confer the right to do so.
c. The nonconforming use shall not be expanded, extended, moved or enlarged unless the DRB finds that such expansion, extension, movement, or enlargement does not increase the degree of non-conformance. Examples of enlarged or expanded uses can include increased hours of operation, increased numbers of tables, number of employees or an increase in the size of the operation through the expansion of a conforming structure.
d. The DRB shall permit the alteration or expansion of a nonconforming use for the sole purpose of conformance with mandated environmental, safety, health, or energy codes.

3.20 OFF-STREET PARKING

Off-street parking spaces shall be provided in accordance with this section in all districts for every building hereafter erected or enlarged, or for any expansion or change of use.

A. Minimum Parking Standards

Land Use Category	Minimum Parking Standard
Residential	2/unit
Accessory Dwelling Unit	1/unit
Lodging	1/unit
Office	2/1,000 sq ft
Retail	3/1,000 sq ft
Restaurant/Bar	1/3 seats
Civic	As required by the DRB under conditional use review
Other	

B. Non-Residential: The Development Review Board may require additional off-street parking for any non-residential use if they find that minimum spaces are not sufficient.

C. Size of Parking Space
1. A parking space shall be at least nine (9) feet in width and eighteen (18) feet in length.

D. ADA Accessible Parking
1. Any public building must provide for handicap parking, and each handicap parking space must be at least thirteen (13) feet in width and eighteen (18) feet in length, with a minimum 3 foot wide accessible route connecting to the building in accordance with the ADA Accessibility Guidelines. Handicap parking spaces will be so designated by appropriate signs.

E. Setbacks
1. Parking lot setbacks shall be a minimum of 5 feet.

F. **Loading and Service Areas.** In all zoning districts other than the VC District, off-street loading space shall be provided for commercial, industrial or institutional uses which will receive shipments in vehicles too large for a standard parking space. Space provided shall be specifically for off-street loading and shall be large enough to fully accommodate the maximum number of such vehicles expected to be on the premises at any one time. Service areas may also be required for development subject to conditional use review to accommodate emergency vehicles, waste collection and disposal areas, transit service, or other purposes as may be necessitated by the proposed use. All loading and

service areas shall be clearly marked and located in such a manner that parked vehicles will not block or obstruct access or sight visibility at intersections.

G. **Modification of parking requirements.** On-site parking requirements may be reduced by the Development Review Board under conditional use review, based upon a determination that special conditions exist which warrant reducing the minimum parking standard. The DRB may approve up to a 50% reduction of off-street parking spaces in Subsection A above. In the VC District, the parking may be reduced beyond 50%, if warranted. When approving a modification of the parking standards, the DRB shall consider the following:
   1. Is the site located on or within 1,000 feet of a transit route?
   2. Are there shared parking facilities with abutting businesses which are sufficient to meet parking demand?
   3. For mixed-use projects, do the proposed uses have staggered business hours with minimal overlap?
   4. Does the type of business proposed generate substantial pedestrian traffic, and are adequate pedestrian facilities present?
   5. Is a reduced number of parking spaces adequate due to mitigation efforts such as bicycle parking, ridesharing or innovative measures (e.g. the provision of transit passes or sponsoring car sharing for tenants/employees)?
   6. Is safe and adequate on-street parking available?
   7. Are green areas to be set aside for future conversion to parking in the event that the amount of space initially permitted is deemed inadequate to meet demonstrated need?
   8. Can the minimum standards not be met for the redevelopment of an existing building?

3.21 PARCELS IN TWO OR MORE DISTRICTS

When a parcel is located in two or more districts, the proposed structure or use must meet the more restrictive district standard.

3.22 PERFORMANCE STANDARDS

In accordance with §4414(5) of the Act, the following standards must be met and maintained by all uses in all districts that are subject to a permit under these Bylaws.

A. **Noise**: noise volume shall be limited to the specified decibel levels listed below measured at the property line. (The sidebar is shown only as a reference to illustrate the decibel levels of typical activities.) Noise levels or frequencies which are not customary in the district or neighborhood or which represent a repeated disturbance to others shall not be permitted. Limited exceptions are allowed for incidental and customary activities, such as the occasional use of lawn mowers and snow blowers for regular property maintenance.

1. Noise shall not exceed 60 dB between 8:00 p.m. and 7 a.m.;
2. Noise shall not exceed 70 dB during the day between 7 a.m. and 8:00 p.m.

Decibel (dB) Levels:
10 dB = normal breathing
30 dB = soft whisper
40 dB = quiet residential area, library
60 dB = normal conversation
70 dB = TV audio, human voice at 10 feet
80 dB = doorbell, machine tools, car at 10 feet
90 dB = lawn mower, tractor, blender
100 dB = snowmobile, factory machinery,
110 dB = leaf blower, power saw, nightclub band
120 dB = chain saw, rock concert, pain threshold
130 dB = stock car race, jackhammer
150 dB = jet engine taking off

B. **Air Pollution**: no use shall create emissions, such as dust, fly ash, fumes, vapors, gases and other forms of air pollution, which:

1. Constitute a nuisance to other landowners, businesses or residents;
2. Endanger or adversely affect public health, safety or welfare;
3. Cause damage to property or vegetation; or,
4. Are offensive or uncharacteristic of the area.

Outdoor wood-fired boilers are exempt from this provision.

E. **Glare, Light or Reflection**: illumination from lighting fixtures or other light sources shall be shielded or of such low intensity as not to cause undue glare, reflected glare, sky glow or a nuisance to traffic or abutting properties. Lights used to illuminate parking areas and drives shall be so arranged and designed as to deflect light downward and away from adjacent residential areas and public highways. Lights shall be of a "downshield luminaire" type where the light source is not visible from any public highway or from adjacent properties. Only fixtures which are shielded to not expose a light source, and which do not allow light to "flood" the property, are permitted to be attached to buildings. Searchlights are not permitted. The Development Review Board may require a lighting plan under conditional use or planned unit development review procedures.

F. **Safety Hazards**: Fire, explosive and similar safety hazards which would substantially increase the risk to an abutting property, or which would place an unreasonable burden on the Fire Department, shall be prohibited.

G. **Electromagnetic disturbances**: any electromagnetic disturbances or electronic emissions or signals which will repeatedly and substantially interfere with the reception of radio, television, or other electronic signals, or which are otherwise detrimental to the public health, safety and welfare, beyond the property lines of the property on which it is located, except as specifically licensed and regulated through the Federal Communications Commission.

H. **Underground Storage Tanks, Ground/Surface Water Pollution**: No use shall result in burying or seepage into the ground of material which endangers the health, comfort, safety or welfare of any person, or which has a tendency to cause injury or damage to property, plants or animals. Commercial, industrial or institutional facilities having underground fuel storage shall maintain all tanks and related equipment with leak detection and spill control systems incorporating the best available safety practices and technology, consistent with government and industry standards.

3.23 RENEWABLE ENERGY FACILITIES

A. Purpose. The purpose of these standards is to promote energy efficient development, and to direct the siting and development of renewable energy facilities in the Town of Chester, as necessary to ensure that:

1. New development conforms to *Chester Town Plan* goals, policies and objectives specific to energy conservation, increasing energy efficiency and renewable energy development.
2. New development is planned and designed for energy efficiency, and to accommodate the future installation of renewable energy systems.
3. Renewable energy facilities subject to municipal review meet minimum standards intended to protect public health, safety and welfare, public facilities and services, neighboring properties and uses, and the Town's most significant natural, historic and scenic resources.

B. Conditional Uses. For purposes of these Bylaws, a single proposed small-scale renewable solar or wind energy facility – including a solar thermal system, a solar photovoltaic (PV) or a wind system with a nameplate capacity of 15 kW or less – that is intended to serve the principal use of the property and meets the following standards, shall be considered an allowed accessory structure in all zoning districts [in which structures are allowed], subject to conditional use review by the Development Review Board and the issuance of a zoning permit. (See Exemptions in Section 4.2.) These systems include:

1. Solar or wind facilities to be mounted on buildings or structures (with the exception of historic structures) which, as mounted, do not exceed maximum district height requirements by more than 30 feet. Facilities mounted on non-conforming structures will not be considered to increase the degree or amount of nonconformance.
2. Individual ground-mounted solar and wind facilities that meet the following requirements:
   a. A ground-mounted solar facility must meet minimum district setback requirements from property lines and rights-of-way, unless waived by the Development Review Board under Section 7.17.B, and shall meet the height standard for the zoning district in which it is located.
   b. A ground-mounted wind energy facility shall not exceed a total height of 125 feet, or a maximum height of 40 feet above obstructions (e.g., structures, tree canopies) within 300 feet of the tower, whichever is greater, as measured vertically from the base of the tower at ground level to the top of the rotor blade at its highest point. The facility shall be set back from all property lines at least a distance that is equivalent to the height of the tower plus the district setback requirement unless waived by the Development Review Board under Section 7.17.B. Setbacks shall be measured from the base of the tower, not guy wires. A minimum clearance of 15 feet is required between the ground and the rotor blade tip at its lowest point. Supporting guy wires must be located at least 10 feet from all property lines.
   c. A ground-mounted lattice tower wind energy facility shall provide full-perimeter fencing or barrier.
3. A wind facility shall not cause shadow flicker on any occupied building located in the vicinity of the property, unless the affected property owner gives written consent, as submitted with the application.
4. The Development Review Board may use the Public Service Department's "Siting a Wind Turbine System on Your Property" to determine how ground-mounted facilities must be sited or screened so that they are not highly visible from adjoining properties.
5. A solar installation shall not cast unreasonable glare onto adjoining properties.
6. The installer must certify in writing that the facility as installed meets manufacturer's specifications and accepted industry safety and performance standards, as established by the National Electrical Code, Institute of Electrical and Electronic Engineers, Underwriters Laboratories, American National Standards Institute, or similar testing and certification facilities. The applicant shall forward a copy of system specifications to the Fire Department.
7. Facility lighting or use of the facility for display or advertising purposes is prohibited.

3.24 REQUIRED FRONTAGE ON, OR ACCESS TO PUBLIC ROADS OR WATERS

A. No land development shall be permitted on existing lots which do not either have frontage on a public road or public waters or by permanent right-of-way, approved of the Development Review Board under subdivision review procedures (see Section 5.2).

B. All driveways and development roads shall be designed and constructed in accordance with the *Town of Chester Road and Bridge Specifications* and the subdivision standards in Section 5.2.

3.25 RESIDENTIAL CARE AND GROUP HOMES

A. A residential care home or group home, to be operated under state licensing or registration, serving not more than eight persons who have a handicap or disability as defined in 9 V.S.A. § 4501, shall be considered by right to constitute a permitted single family residential use of property, except that no such home shall be so considered if it is located within 1,000 feet of another existing or permitted residential care or group home.

B. A residential care home or group home, to be operated under state licensing or registration, serving nine or more who have a handicap or disability as defined in 9 V.S.A. § 4501, shall be reviewed as a multifamily dwelling and shall be subject to conditional use and site plan review.

3.26 SEWAGE DISPOSAL PERMIT

In accordance with 24 V.S.A §4414, no construction for a dwelling or any building to be occupied may take place under a zoning permit unless and until a wastewater and potable water supply permit has been issued under 10 V.S.A. Chapter 64.

3.27 SIGNS

All signs shall comply with Title 10, Chapter 21, Vermont Statutes Annotated and with the following:

A. **Purpose**. This ordinance acknowledges the importance of signs to inform the traveling public of local businesses, but also recognizes that the Town does not benefit from unlimited signs. The purpose of this ordinance is to help preserve and improve the existing attractive aspects of the Chester environment, to promote the welfare, convenience and safety of its inhabitants and visitors, to conserve the value of property, and to encourage a style and scale of outdoor advertising that is compatible with the more attractive features of Chester.

B. **Sign Permit**. All businesses, home occupations, etc. requiring a sign must obtain a Sign Permit from the Zoning Administrative Officer before such sign can be erected.

C. **On-Premise Signs**. Any structure, wall display, device or representation which is designed or used to advertise or call attention to or directs a person to a business, association, profession, commodity product, institution, service, entertainment, person, place or thing, or activity of any kind, and is visible or audible from a highway or other public right-of-way and is located entirely on one's property.

C. **Off-Premise Signs**. Off-premise signs are prohibited.

D. **Sign Specifications**. The following requirements shall apply to all signs in all Districts:

1. Two (2) on-premise signs shall be permitted, one (1) free-standing and one (1) attached to the building.
2. All new signs, and/or movement, enlargement, alterations, or reconstruction of existing signs shall be in compliance with the Bylaws as stated herein.
3. All signs shall be constructed of durable materials and shall be maintained in a safe condition and

in good repair at all times.

4. Every sign shall be designed and located in such a manner as to:
   a. Not impair public safety;
   b. Not restrict clear vision of the street or between a sidewalk and street;
   c. Not be confused with or obscure any traffic sign or signal;
   d. Not obstruct any door, window or fire escape;
   e. Not be attached to a tree or a utility pole;
   f. Not be within the town highway right-of-way.
5. Signs shall not be located within ten (10) feet of street line, nor within twenty (20) feet of a neighboring property line, nor within seventy-five (75) feet of any intersection unless it is a wall sign.
6. In VC, RC, CI and SV Districts, neither sign shall be in excess of twenty-four (24) square feet in size, per side, or in excess of sixteen (16) feet in height from the road surface.
7. In R20, R40, R3, CR and F Districts, neither sign shall be in excess of twelve (12) square feet in size, per side, or in excess of eight (8) feet in height from the road surface.
8. For Home Occupation/Home Business, in any district, only one (1) sign with a two (2) square foot maximum shall be allowed.
9. When a sign is made up of individual lettering, the square footage of the sign is to be calculated by the area of the surface required to enclose the lettering.
10. No less than 75% of the surface of each sign shall be of muted, harmonious color tones.

E. **Sign Lighting**.

1. Internally lit signs are prohibited. All signs not complying with section at the date of the adoption of this ordinance, will be deemed a non-conforming structure and are subject to Section 3.19 of these Bylaws.
2. Externally lit signs shall be shielded so as to not produce glare, undue distraction, or hazard either to the surrounding area or to pedestrian and vehicular traffic. The illumination of said signing shall be properly focused upon the sign, and shall be limited to during business operating hours only.

F. **New Sign Permit Required**. A permit is required for a sign when a business changes use and/or replaces a sign. Continuation of a non-conforming sign shall require Development Review Board consideration.

G. **Sign Plaza**. When a property has multiple businesses, the property owner is allowed one sign plaza not to exceed forty-eight (48) square feet nor higher than twelve (12) feet in height from the grade of the public road, with individual signs on the plaza for each business. These individual signs are to be of a uniform size for each business. One additional sign not to exceed a total of six (6) square feet is permitted on the building for each business.

H. **Gasoline/Service Stations**. A gasoline/service station shall be permitted the following signs:

1. Gasoline price signs shall be confined to the pump island. The signs shall be limited to one square foot in area and one per pump. One (1) free-standing sign shall be permitted in accordance with these sign specifications but shall not include pricing.
   OR
2. Gasoline prices may be incorporated into the single free-standing sign allowed on the lot, provided that this free-standing sign is located in the pump island, and no other pricing signs are displayed.

All signs not complying with section at the date of the adoption of this ordinance, will be deemed a non-forming structure and are subject to section 3.19 of these Bylaws.

I. **Special Signs**. The following special signs may be permitted upon approval by the Development Review Board if the Board finds that such is in the public interest, not detrimental to surrounding properties, and will not create a safety hazard. [See Section J]

J. **Signs necessary or beneficial to the public welfare.**

1. A sign identifying the commonly accepted name of a commercial building which sign shall not exceed sixteen (16) square feet in overall area, two (2) feet in overall height, or ten (10) feet in overall length.

2. State of Vermont Official Business Directory Signs on State and Town Highways.

3. Off-Premise directional signs located out of the highway right-of-way, the area of which shall not exceed four (4) square feet, and which provide directions to places of business offering for sale agricultural products harvested or produced on the premises where the sale is taking place.

4. Roof signs limited to Commercial Districts. Projecting signs mounted on the roof shall in no case exceed forty (40) square feet in overall area nor extend beyond the peak of the roof.

K. **Vending Machines**. Vending machines which are traditionally located outside of commercial buildings, such as those which house or dispense soda, ice, windshield wipers, propane gas cylinders and the like, may incorporate unilluminated sign(s) advertising the product being sold. No vending machine may be internally illuminated.

L. **Signs Which Do Not Require a Permit**. The following signs do not require a permit and are permitted in all Districts:

1. Signs wholly within the confines of a building up to four (4) square feet in size and not internally illuminated.
2. Temporary real estate signs, each of which does not exceed six (6) square feet in overall area. Said sign shall only be permitted on property which is either being sold or leased, and shall be removed within thirty (30) days from the date on which its intended purpose has been fulfilled.
3. A temporary construction sign located on the property which is being developed. Said sign shall not exceed thirty-two (32) square feet in area and shall be removed immediately when its stated purpose has been fulfilled.
4. Entrance and exit signs located near a driveway not exceeding two (2) square feet each.
5. Signs to be maintained for not more than two (2) weeks announcing an auction, or a campaign, drive or event of a civic, philanthropic or religious organization or for a yard sale conducted on the premises of a homeowner. Each sign shall not exceed two (2) square feet.
6. Banners to be temporarily placed across the street in the Town Highway right-of-way, do not need a Sign Permit, however, shall have to get permission from the Selectboard.

M. **Prohibited Signs**. The following signs shall be prohibited in every District:

1. Signs which impair public safety.
2. Any permanent sign located within a highway right-of-way, except for official traffic control signs and civic recognition signs.

N. **Compliance**. All signs not complying with the Sign Regulation at the date of its adoption will be deemed a non-conforming structure and are subject to Section 3.19 of these Bylaws.

3.28 STRUCTURES FOR AGRICULTURE

Pursuant to 24 V.S.A.§ 4413(d) farm structures (excluding dwellings), accepted agricultural practices and accepted silvicultural practices are exempt from local permitting requirements (See Section 4.2). However, farmers intending to erect a farm structure must submit to the municipality a written notice of intent to build a farm structure. The notification must contain a sketch of the proposed structure and include the setback distances from adjoining property owners and the street right-of-way. Additionally, all farm structures within the Flood Hazard Overlay District must comply with the National Flood Insurance Program. Lastly, the municipality may report violations of Accepted Agricultural Practices or accepted silvicultural practices to the appropriate state authorities for enforcement.

3.29 STORAGE OF FLAMMABLE FLUIDS

The storage of all flammable fluids and the equipment in which it is stored is controlled under the Fire Code of Vermont as administered by the Division of Fire Safety. Storage of flammable fluids, other than bulk storage for commercial distribution, consistent with this code is permitted in any district, but will require a Zoning Permit if the capacity is over one thousand (1,000) gallons and must meet setback requirements. Bulk storage for commercial distribution is only permitted in CI District as a conditional use.

3.30 SURFACE WATER PROTECTIONS

A. To prevent soil erosion and sedimentation of surface waters, development shall be setback away from the high water mark of all streams and rivers and public ponds. A minimum 25 foot setback is required for streams and rivers that are between two- to six-feet wide, measured from the high water mark on each bank. A minimum 50 foot setback is required for ponds, as well as streams and rivers that are wider than six feet, measured from the high water mark on each bank. No development, excavation, filling, clearing or grading shall occur within the setback area, with the exception of clearing and associated site development necessary to accommodate the following, approved as a conditional use by the Development Review Board:
   1. Road, driveway and utility crossings.
   2. Stream bank stabilization and restoration projects, in accordance with applicable state and federal regulations.
   3. Bicycles and pedestrian paths and trails.
   4. Recreation facilities, including structures, and improved lake or pond accesses.
   5. Micro-hydro (i.e. run of the river) energy systems.

B. This provision applies to all streams and rivers that are not protected under the Flood Damage Prevention District (see Section 2.13).

ARTICLE 4 – DEVELOPMENT REVIEW PROCEDURES

4.1 APPLICABILITY AND COORDINATION OF REVIEW PROCESS

No land development may be commenced within the Town of Chester without a permit issued by the Zoning Administrator. Additional review procedures are required as specified in these Bylaws. The following review procedures are required under these Bylaws.

(A) **Permitted Use/Administrative Review**. (See Section 7.2)

1. Permitted Uses (Article 2)
2. Boundary Line Adjustments (Section 4.10)
3. Changes/Expansions of Use involving permitted uses (Section 3.4)
4. Sign Permits (Section 3.27)
5. Rebuilding damaged structures (Section 3.6)
6. Private Broadcast Facilities (Section 3.2(C))
7. Broadcast Facilities with de minimis impacts (Section 3.2(F))

(B) **Conditional Use Review.** (See Section 4.5)

1. Conditional Uses (4.6)
2. Changes/Expansions of Use involving conditional uses (Section 3.4)
3. Commercial Broadcast Facilities (Section 3.2)
4. Special Signs (Section 3.27(I))
5. Campgrounds (Section 3.3)
6. Development within Stream/Wetland Buffers (Section 3.30)

(C) **Planned Unit Development (PUD) Review.** (See Section 4.7)

1. PUDs are optional
2. Development Review Board reviews all PUD application concurrently with Subdivision and Conditional Use Reviews

(D) **Flood Damage Prevention Review.** (See Article 6 & Section 4.8)

1. All development within FEMA's Special Flood Hazard Areas

(E) **Subdivision Review.** (See Section 4.9)

1. Minor Subdivisions (less than 5 lots)
2. Major Subdivisions (5 lots or more)
3. Access to parcels with no frontage (Section 5.2)

(F) **Site Visits.** (See Section 4.5)

(G) **Waivers**. (See Section 7.16)

(H) **Variance**. (See Section 7.15

1. Flood Hazard Prevention variance requests are subject to Section 7.16(B)
2. All other variance requests are subject to Section 7.16(A)

(I) **Appeal of Administrative Officer's Decision**. (See Section 7.11)

1. Development Review Board reviews all appeals of Zoning Administrator decisions

4.2 LIMITATIONS AND EXEMPTIONS

A. In accordance with §4413(a) of the Act, the following uses may be regulated only with respect to location, size, height, building bulk, yards, courts, setbacks, density of buildings, off-street parking, loading facilities, traffic, noise, lighting, landscaping, and screening requirements, and only to the extent that regulations do not have the effect of interfering with the intended functional use[1]:

1. State- or community-owned and operated institutions and facilities;

2. Public and private schools and other educational institutions certified by the state department of education;

3. Churches and other places of worship, convents, and parish houses;

4. Public and private hospitals;

5. Regional solid waste management facilities certified under 10 V.S.A. chapter 159;

6. Hazardous waste management facilities for which a notice of intent to construct has been received under 10 V.S.A. § 6606a.

B. In accordance with the Act [§4446], no zoning permit shall be required for the following, which have been determined by the Town to impose no impact, or merely a de minimis impact on the surrounding land area and overall pattern of land development, or which are by law otherwise exempted from municipal review[1]:

1. Any structure for which construction began prior to the effective date of these regulations, providing such construction complied with all applicable local regulations in effect when construction commenced.

2. Accepted agricultural practices (AAPs), including silvicultural practices and farm structures, as defined by the Secretary of Agriculture, Food and Markets in accordance with the Act [§4413(d)]; however written notification, including a sketch plan of the structure showing setback distances from road rights-of-way, property lines, and surface waters, shall be submitted to the Administrative Officer prior to any construction, as required under the AAPs (see Section 3.28).

3. Public utility power generation and transmission facilities regulated by the Vermont Public Service Board under 30 V.S.A. §248.

4. Hunting, fishing and trapping activities as defined by the state [24 V.S.A. §2295].

5. Ancillary telecommunication facility improvements [as defined in 30 V.S.A. §248a(b)] that do not exceed a footprint of 300 square feet and a height of 10 feet in accordance with §4413(h)(1)(A) of the Act.

6. In accordance with §4413(h)(1)(B) of the Act, communications line improvements including:
    a. The attachment of a new or replacement cable or wire to an existing electrical distribution or communications distribution pole;

[1] All applicable land development listed in this section is still subject to review under the Flood Hazard Prevention provisions of these Bylaws.

b. The replacement of an existing electrical distribution or communications distribution pole with a new pole, so long as the new pole is not more than 10 feet taller than the pole it replaces.

7. Normal maintenance, repair or replacement of legally existing structures that does not result in any change to the footprint, roof plane, height of the structure, or a change in use.

8. Minor grading and excavation associated with road and driveway maintenance (including culvert replacement and re-surfacing) and yard improvements associated with accessory uses to existing principle uses (establishing garden and landscape areas).

9. Installing or replacing cisterns.

4.3 TEMPORARY USES

A permit may be issued by the Development Review Board for non-conforming uses, providing that the use demonstrates a unique and special circumstance. It is a requirement of this section, that any permit issued has been reviewed under the conditional use criteria of these regulations. The non-conforming use shall be temporary and shall be discontinued within 6 months from the date of the permit. Such permits may be renewed for two additional periods not to exceed three months each, upon application to the Development Review Board.

4.4 APPLICATION SUBMISSION REQUIREMENTS

The applicant shall submit to the Development Review Board six (6) copies of the application with all required supporting data and site plans drawn to scale, showing where applicable: existing features; contours; structures; easement and proposed structure locations and land use areas; streets; driveways; circulations; parking and loading spaces; pedestrian walks; landscaping including site grading and screening; water and sewage disposal facilities; water courses and utilities.

4.5 SITE VISITS

The Development Review Board may conduct a Site Visit as a pre-requisite to the approval of all subdivisions and any use other than one and two family dwellings and structures considered accessory to residential uses and agricultural or forest uses. In reviewing the site, the Development Review Board shall consider all applicable standards under these Bylaws.

4.46 BONDING

The Development Review Board may, in their discretion, require that the developer of any project set forth a bond in an amount established by the Development Review Board. The developer shall file with the Town Clerk a certified check, performance bond or surety bond in the amount established by the Development Review Board. Any such surety shall be satisfactory to the Legislative Body as to form sufficiency, manner of execution and surety. If the project is to be completed in phases, the surety amount need only cover the cost of improvements for each phase.

4.7 CONDITIONAL USES

Specific conditional uses are permitted only by approval of the Development Review Board, providing that General standards, Specific Standards, Performance Standards and Special Criteria, as herein provided are met, and further provided that:

A. The Development Review Board after public notice and public hearing determines that the proposed use will conform to such standards.

B. In granting such conditional use, the Board may attach such additional reasonable conditions and

safeguards as it may deem necessary to implement the purpose of the law and these Bylaws.

C. The Development Review Board shall act to approve or disapprove any such requested conditional use within forty-five (45) days after the date of the final public hearing held under this Section, and failure to so act within such period shall be deemed approval.

1. **General Standards**
   These general shall require that any conditional use proposed for any district created under these Bylaws shall not result in an undue adverse effect:

   a. The capacity of existing or planned community facilities;
   b. The character of the area affected, as defined by the purpose or purposes of the zoning district within which the project is located, and specifically stated policies and standards of the *Chester Town Plan*;
   c. Traffic on roads and highways in the vicinity;
   d. Bylaws and ordinances then in effect; and,
   e. Utilization of renewable energy resources.

2. **Specific Standards**
   Specific standards will include consideration with respect to:

   a. Minimum lot size;
   b. Distance from adjacent or nearby uses;
   c. Minimum off-street parking and loading facilities;
   d. Landscaping and fencing;
   e. Design and location of structures and service area;
   f. Size, location and design of signs;
   g. Performance Standards under Section 3.21; and,
   h. Other such factors as these Bylaws may include.

3. **Special Criteria**
   The following Special Criteria shall be considered by the Development Review Board when considering an application for a conditional use permit in the (VC) Village Center, (SV) Stone Village, (R-C) Residential-Commercial, (CI) Commercial-Industrial and (R20) Residential 20,000 Districts:

   a. That all construction of new buildings, as well as any exterior alteration, fencing, lighting, reconstruction or renovation of existing building adhere harmoniously to the over-all New England architectural appearance which gives the center of Chester its distinct regional character and appeal.
   b. That the inclusion of certain features of exterior trim, such as shutters or eaves trim, or other decorative features be encouraged, in order to insure that new construction blends comfortably with the existing buildings in the district.
   c. That the use of native, traditional building materials commonly used for construction in Chester in the past, be encouraged. Such desirable materials would include wood siding, natural stone and brick masonry and be in keeping with the buildings in the area.
   d. The aesthetics of the area and the preservation of Historical Sites.

4.8 PLANNED UNIT DEVELOPMENT

A. **Purpose**. In accordance with the Act [§4417], Planned Unit Developments (PUDs) are allowed in the Town of Chester to permit flexibility in the application of land development regulations for the purposes

of Section 4302 of this title and in conformance with the municipal plan. The purposes of the Planned Unit Development in Chester are:

1. To encourage compact, pedestrian-oriented development and redevelopment, and to promote a mix of residential uses or nonresidential uses, or both, especially in downtowns, village centers, new town centers, and associated neighborhoods.
2. To implement the policies of the *Chester Town Plan*, such as the provision of affordable housing.
3. To encourage any development in the countryside to be compatible with the use and character of surrounding rural lands.
4. To provide for flexibility in site and lot layout, building design, placement and clustering of buildings, use of open areas, provision of circulation facilities, including pedestrian facilities and parking, and related site and design considerations that will best achieve the goals for the area as articulated in the municipal plan and bylaws within the particular character of the site and its surroundings.
5. To provide for the conservation of open space features recognized as worthy of conservation in the municipal plan and bylaws, such as the preservation of agricultural land, forest land, trails, and other recreational resources, critical and sensitive natural areas, scenic resources, and protection from natural hazards.
6. To provide for efficient use of public facilities and infrastructure.
7. To encourage and preserve opportunities for energy-efficient development and redevelopment.

B. **Review Procedure**. A PUD shall be reviewed by the Development Review Board (DRB) concurrently with subdivision and conditional use review in this Article 4. In addition to the conditional use, subdivision and site plan application requirements, an application for PUD approval shall include a statement describing all proposed modifications, changes or supplements to existing bylaw requirements. Modifications of this bylaw approved by the DRB shall be noted in writing and appended to a plat depicting the project to be filed in the Chester Land Records. All other provisions of this bylaw not specifically modified shall remain in effect and be applicable to the project.

C. **Coordination with Conditional Use Review**. Review and approval of a PUD involving the development of one or more conditional uses under this Section shall not exempt the proposed development from conditional use review. The DRB may review and approve one or more conditional uses concurrently with granting PUD approval, or may require the submission of a conditional use application, to include the terms and conditions of the PUD approval, including any modifications of this bylaw granted in accordance with this Section, at a later date.

D. **General Standards**. The modification of zoning regulations by the DRB may be permitted in accordance with the following standards:

1. The PUD shall meet all applicable conditional review standards, and shall be consistent with the *Chester Town Plan* and all other applicable municipal regulations and ordinances currently in effect, including all local and state regulations for sewage disposal and the protection of water quality.
2. The PUD shall represent an effective and unified treatment of the development site, including provisions as appropriate for the preservation or protection of surface and ground waters; wetland, stream bank, and floodplain areas; significant topographic features, including hilltops and ridgelines; areas of steep slope or shallow soil; significant resource lands, including agricultural and forest land; historic or archaeological sites and structures; natural and critical habitat areas; and open spaces, including scenic views and vistas.
3. As a minimum requirement each single family dwelling unit and each commercial building shall be hooked into the Municipal water and wastewater system at the applicant's expense. The DRB may find and conclude that this requirement is not reasonable for the proposed PUD because of the distance to the Municipal systems and may be fulfilled by the requirement that each owner-

occupied single-family dwelling have its own individual water well and septic system, which systems may be located in the common area. Each individual system shall be the responsibility of the owner of the individual unit or commercial building.

4. The DRB may allow for a greater concentration or intensity of development within some section(s) of the development than in others, on individual lots which are smaller than the minimum lot size for the district within which the PUD is located, provided that there is an offset by a lesser concentration in other sections, including the reservation of no less than 50% of the remaining land as open space.
5. The minimum front, side and rear yard setbacks at the periphery of the PUD shall be as dictated for the particular district unless otherwise specified by the DRB. The DRB may allow other setback standards, such as zero lot lines, as part of PUD approval.
6. Provision shall be made for the preservation of open space. Preserved open space shall be dedicated, either in fee or through a conservation easement to the Town, a community association comprising all of the present and future owners of lots or dwellings in the project, or a non-profit land conservation organization. The DRB shall approve such easement. Land held in common shall be subject to appropriate deed restrictions stipulating the permitted and restricted use of such lot, and establishing the person or entity responsible for maintenance and long term stewardship. The DRB shall approve the location, size and shape of lands set aside to be preserved for open space in accordance with the following:
   a. Open space land shall provide for the protection of identified resources, including farmland, productive forest, wildlife habitat, natural areas, aquifer protection areas, surface waters, stream banks, historic and archaeological sites, and scenic views and vistas;
   b. Designated open space may include the portion of a single lot which is characterized by one or more of the above referenced features, or may encompass the contiguous boundaries of the above referenced feature located on multiple lots;
   c. The location, shape, size and character of the open space shall be suitable for its intended use. Generally, open space shall be at least 50% of the total area for projects involving a parcel(s) of twenty-five (25) acres or more. For smaller parcels, open space should be in proportion to the size and scope of the project, and its intended use;
   d. Open space shall be suitably improved and/or maintained for its intended use, except for open space containing natural or cultural resources worthy of preservation that may be required to be left unimproved. Provisions shall be made to enable lands designated for agriculture and forestry to be used for these purposes. The DRB as appropriate may require management plans for forests and/or wildlife habitat. Areas preserved for agricultural use should be of a size that retains their eligibility for state and town tax abatement programs;
   e. Open space land shall be located so as to conform with and extend existing and potential open space lands on adjacent parcels; and
   f. Sewage disposal areas and utility and road rights-of-way or easements, access and parking areas shall not be counted as open space areas, except where the applicant can prove, to the satisfaction of the DRB, that they will in no way disrupt or detract from the values for which the open space is to be protected.

7. Where a district boundary line divides a parcel, the DRB may allow the development of a single PUD with a total density based on the combined allowable density of each district.
8. Two (2) or more contiguous parcels under the ownership or control of the applicant may be combined for review as a PUD. The permitted density on one parcel may be increased as long as the overall density for the combined parcels does not exceed that which could be permitted, in the DRB's judgment, if the land were subdivided into lots in conformance with district regulations.
9. The total number of dwelling units shall not exceed that which would be permitted in the DRB's judgment if the parcel were subdivided into buildable lots in conformance with the district minimum lot area required for single family dwellings. However, the number of dwelling units

allowed in the PUD may, at the discretion of the DRB, be increased in accordance with the following:

a. The DRB may grant a density increase of up to 25% of the allowable number of units in instances in which a significant portion (50% or greater) of the site is preserved as open space and/or the DRB determines that the PUD reflects an exceptional site design that will result in the preservation of important natural resources and the creation such amenities as pedestrian paths, parkland and/or playgrounds; or
b. The DRB may grant a density increase of up to 50% of the allowable number of units in instances in which not less than 50% of the total number of dwelling units created are affordable housing units, as defined in these Bylaws.

10. The dwelling units permitted may, at the discretion of the DRB, be of varied types, including single-family, two-family, or multi-family construction, and may be attached or detached.
11. The total number of allowable commercial or industrial parcels within the PUD shall not exceed the number which could be permitted in the DRB's judgment, if the land were subdivided into lots in conformance with the zoning regulation for the district in which the project is located.
12. A PUD may include any permitted or conditional uses allowed in the district in which it is located. Multiple principle structures and/or uses on a lot, or multiple ownership of a single structure may be permitted.
13. Principal buildings and mixed uses shall be arranged to be compatible, and buffered as appropriate to ensure visual and acoustical privacy for the residents of the development and for adjacent properties.

4.9 FLOOD DAMAGE PREVENTION REVIEW PROCEDURES

A. **Applications and Hearings**

1. All applications for permits for development in the FHA must be heard as a conditional use by the Development Review Board (DRB). Those hearings shall be scheduled, noticed and heard in accordance with 24 VSA Chapter 117, Subchapter 11, Sections 4465 et seq.

2. **Submission Requirements.** Applications for Flood Hazard Review shall be submitted to the Administrative Officer on the approved blank available from the Town office and shall be accompanied by:
   a. Two (2) copies of a map drawn to scale showing:
      1. The dimensions of the lot;
      2. The location of existing and proposed structures;
      3. The elevation of the lowest floor, including basement, either
         a. in relation to mean sea level where base flood elevation data in relation to mean sea level is available, or
         b. in relation to the elevation determined pursuant to Section 7B, or
         c. if neither (a) or (b) apply for lack of a determined elevation, in relation to highest adjacent grade

         of all new or substantially improved structures and notations as to whether or not such structures contain a basement; and
      4. The relationship of the above to the streambank and, based upon the best information available (including Federal Insurance Administration data, if issued), the elevation and limits of the SFHA.
   b. If any portion of the proposed development is within a designated Floodway, the application must show that the development standards in Section 8 A. and B. are met.
   c. If the proposed development is in the Floodway Fringe Area(s), the application must show that the development standards in Section 8 A and C. are met.
   d. All permits required for the proposed development by municipal law.

e. The applicant shall contact a permit specialist at ANR and request the specialist to complete a permit review for the project. The permit review sheet, which informs the applicant of all governmental agencies from which permit approval for the proposed development is required by federal or state law, shall be filed as a required attachment to the Town permit application.

3. **Review Procedure**. The DRB shall review the application, comments from the State National Floodplain Insurance Program Coordinator at the Vermont Agency of Natural Resources, Department of Environmental Conservation, River Management Section, if available, and other pertinent information available to insure compliance with the development standards set forth in Article 6 Development Standards, and:
   a. The DRB shall review the application and assure that all permits required for the proposed development by municipal law have been received by the applicant.
   b. The DRB may, in its discretion, require that consultant be hired to aid in the permitting process. Should a consultant need to be hired, the expense of said consultant will be the sole responsibility of the applicant.
   c. If the DRB approves the proposed project, among other conditions, the DRB shall, in its decision, make the approval contingent on the applicant obtaining all permits required by federal or state agencies, as shown on the project review sheet.
   d. The permit issued by the Administrative Officer after the DRB approval shall contain, among other conditions, a statement that the validity of the permit is contingent on the applicant obtaining all permits required by federal or state agencies, as shown on the ANR permit review sheet.
   e. Applicant is required to obtain the legally required permits from the entity indicated on the permit review sheet, or, if it is determined by that agency that a permit is not required, a letter so stating from the agency, and as received provide copies of the permit or letter to the Administrative Officer for the applicant's file.

4. **Permit Expiration**. Any permit issued for development within the SFHA shall become void if the work described therein is not commenced within a period of one (1) year from the date of issuance and diligently prosecuted thereafter.

4.10 SUBDIVISION REVIEW PROCEDURES

A. PRELIMINARY PLAT REVIEW

1. **Application and Fee**. The Subdivider shall file an application for the consideration of a Preliminary Plat of the proposed subdivision in the form described in subsection F using the approved application blank available from the Administrative Officer.

   The Preliminary Plat shall, in all respects, comply with the requirements set forth in the provisions of these Bylaws. The application for review of the Preliminary Plat shall be accompanied by a fee, as established by the Legislative Body, payable by check to the Town of Chester, Vermont, six (6) copies of the Preliminary Plat with a vicinity map shall be submitted to the Administrative Officer at least fourteen (14) days prior to a regular meeting of the Development Review Board.

2. **Study of Preliminary Plat**. The Development Review Board shall study the practicability of the Preliminary Plat in relation to the requirements of Section 8. Particular attention shall be given to the arrangement, location, and width of roads, their relation to the topography of the land, water supply, sewage disposal, drainage, lot sizes, and arrangement, the impact on adjoining lands, and the requirements of the *Chester Town Plan* and the General Standards in Article 3. The

Subdivider, or his duly authorized representative, shall attend meetings of the Development Review Board to discuss these issues. Notice of such subdivision shall be sent by the Development Review Board to all adjoining landowners.

3. **Public Hearing**. Within forty-five (45) days of the Official Submittal Date for the Preliminary Plat, the Development Review Board shall hold a public hearing at which time the Subdivider, or his duly authorized representative, shall discuss with the Development Review Board the details of his proposal and both shall respond to comment from the public. Notice of the hearing shall be given in accordance with §4447 of the Act, and a copy of the notice shall be sent to the Regional Planning Commission and to an adjacent municipality in accordance with §4414 of the Act.

4. **Action on Preliminary Plat**. Within forty-five (45) days after the adjournment of the public hearing, the Development Review Board shall take action to approve, approve with conditions, or disapprove the Preliminary Plat. Failure of the Development Review Board to act within forty-five (45) days shall constitute approval. Notice of the decision shall be sent to the Subdivider by certified mail along with a statement of the grounds for denial or conditions of approval supported by findings of fact, and specific changes required in the Final Plat. If no public hearing was held, the 45-day period shall begin with the Official Submittal Date for the Preliminary Plat. A copy of the decision shall be sent to the Legislative Body.

   Approval of a Preliminary Plat shall not constitute approval of the subdivision, but rather it shall be deemed an expression of approval of the design submitted on the Preliminary Plat as a guide to the preparation of the Final Plat, which shall be submitted for approval of the Development Review Board and for recording upon fulfillment of the requirements of these Bylaws and the conditions of the Preliminary Plat approval. Prior to approval of the Final Plat, the Development Review Board may require additional changes as a result of further study of the subdivision in final form.

5. **Disclosure of Subsequent Development Plans**. Whenever an applicant submits a proposal for subdivision that has the potential for further subdivision, the Development Review Board will require a general indication of the intended uses or a master plan of the remaining portion of land. Such an indication or master plan shall include access, type of use, intensity of use and phasing.

B. FINAL PLAT REVIEW

1. **Application and Fee**. The Subdivider shall, within six months after the approval of the Preliminary Plat, file with the Development Review Board an application for approval of the Final Plat in the form described in Section 4.8(F), using the approved application blank available from the Administrative Officer. If the Final Plat is not submitted to the Development Review Board within six (6) months after the approval of the Preliminary Plat, the Development Review Board may refuse without prejudice to act on the Final Plat and require resubmission of the Preliminary Plat. The application for Final Plat approval shall be accompanied by a fee, as established by the Legislative Body, payable by check to the Town of Chester, Vermont. One (1) original and one (1) copy of the Final Plat, two (2) sets of Construction Drawings and the original and one true copy of any offers of cession shall be presented to the Administrative Officer at least fourteen (14) days prior to a regular meeting of the Development Review Board.

2. **Study of Final Plat**. The Development Review Board shall study the Final Plat to see that it conforms in all respects to the requirements set forth during review of the Preliminary Plat and that it responds fully, in its final form, to the requirements of Section 8. The Subdivider, or his

duly authorized representative, shall attend meetings of the Development Review Board to discuss these issues.

3. **Public Hearing**. Within forty-five (45) days of the Official Submittal Date for the Final Plat, the Development Review Board shall hold a public hearing at which time the Subdivider, or his duly authorized representative, shall be present. Notice of the hearing shall be given in accordance with § 4447 of the Act and a copy of the notice shall be sent to the Regional Planning Commission and to an adjacent municipality in accordance with § 4414 of the Act.

4. **Action on Final Plat**. Within forty-five (45) days after the adjournment of the public hearing, the Development Review Board shall approve, approve with conditions, or disapprove the Final Plat. Failure of the Development Review Board to act within forty-five (45) days shall be deemed approval. However, if approved, the Plat shall not be signed by any member of the Development Review Board until the Subdivider has complied with the provisions of Section 4.8(D)(2). Notice of this fact and of the Development Review Board's decision shall be sent to the Subdivider by certified mail along with a statement of the grounds for denial or conditions of approval supported by findings of fact. A copy of the decision shall be sent to the Legislative Body, and also to the District II Environmental Development Review Board.

5. **Development in Sections**. At the time the Development Review Board grants Final Plat approval, it may permit the Plat to be divided into two or more sections subject to any conditions the Development Review Board deems necessary in order to insure the orderly development of the subdivisions.

   The applicant may only proceed with a section of the approved Plat if said section constitutes at least ten (10) percent of the total number of lots contained in the approved Plat. In these circumstances, Plat approval on the remaining parts of the Plat shall remain in effect for three (3) years or a period of time mutually agreed upon, in writing and attached to the Plat, by the Development Review Board and the Subdivider subject to compliance with Sections 6.2 and 7 of each of these parts.

D. PUBLIC INVESTMENTS

1. **Public Investment Review**. The Development Review Board shall, during its review process, study the Subdivision Plat to determine the extent and adequacy of planned public investments requisite in the interests of the public health, safety, and welfare. When a proposed subdivision would have an extraordinary impact upon the Town's existing public investments outside of the subdivision, the Development Review Board shall require the Subdivider to assume or share in the added financial burden on the municipality in an amount to be negotiated with the Legislative Body.

2. **Bonding for Public Investments**. Before the Final Plat is signed, the Subdivider shall, in an amount set by the Development Review Board, file with the Town Clerk a certified check, performance bond or other surety to cover the full cost of required public investments. Any such surety shall be satisfactory to the Legislative Body as to form, sufficiency manner of execution and surety. A maximum period of time, not to exceed three (3) years, which the Development Review Board may determine appropriate, shall be set forth in the surety contract within which the public investments must be completed. The contract may also provide for reduction of the surety amount in proportion to satisfactory completion of portions of the required public investments. If the public investments are to be completed in phases, the surety amount need only

cover the cost of improvements for each phase, provided that the phases conform to section of the Plat filed in accordance with Section 5.5.

3. **Modification of Design Improvements**. If any time before or during the construction of the public investments it is demonstrated to the satisfaction of the Town consultant engineer that unforeseen conditions make it necessary to modify the design of such improvements, the Town consultant engineer may authorize modifications, provided these modifications do not constitute a waiver or an alteration of the function of any improvements required by the Development Review Board. The Town consultant engineer shall issue any authorization under this section in writing and shall transmit a copy of such authorization to the Development Review Board to be attached to the Final Plat. Modifications which constitute revisions of the Plat shall receive Development Review Board approval in accordance with Section 7.3.

4. **Inspection of Improvements**. At least five (5) days prior to commencing construction of public investments, the Subdivider shall pay an inspection fee, as established by the Legislative Body, payable by check to the Town of Chester, Vermont, and shall notify the Town consultant engineer, in writing, when construction of such improvements commence, so that inspection can proceed to assure that all requirements of the Town of Chester Highway Construction Specifications, the Town of Chester's Design Standards and Construction Specifications, and any other bylaws are fulfilled during construction of the improvements, and to assure the satisfactory completion of improvements and utilities required by the Development Review Board.

5. **Proper Installation of Improvements**. If the Town consultant engineer shall find, upon inspection of the improvements completed before the expiration date of the performance bond, that any of the required improvements have not been constructed in accordance with Construction Drawings submitted by the Subdivider or authorized modifications thereto, the Town consultant engineer shall report to the Legislative Body, the Administrative Officer, and the Development Review Board. The Legislative Body shall notify the Subdivider and take all necessary steps to preserve the Town's rights under the surety. No other Plat, submitted by the Subdivider who is in default on a previously approved Plat, shall be approved by the Development Review Board.

6. **Maintenance of Improvements**. The applicant shall be required to provide for maintenance of all improvements until acceptance of said improvements by the Legislative Body. The applicant may be required to secure a maintenance bond upon completion of the improvements in an amount set by the Development Review Board and satisfactory to the Legislative Body as to form, sufficiency, manner of execution, and surety. Such bond shall insure the satisfactory condition of the improvements for a period of two (2) years after their completion.

E. FILING OF SIGNED PLAT

1. **Final Approval and Filing**. Upon completion of the requirements in Sections 4.8(B) and 4.8(D)(2) above and notation to the effect upon the Subdivision Plat, such Plat shall be deemed to have final approval and shall be properly signed by a quorum of the Development Review Board and shall be filed by the applicant in the office of the Town Clerk. Any subdivision Plat not so filed or recorded within one hundred and eighty (180) days of the date upon which such Plat is approved, or considered approved by reason of the failure of the Development Review Board to act, shall become null and void.

2. **Monuments**. When the Plat is filed, the Subdivider shall certify to the Town Clerk that permanent markers have been placed at all lot corners. All markers shall be of metal at least

three-quarters (3/4) of an inch in diameter and shall project at least twenty-four (24) inches above the ground.

3. **Revision of Plat after Approval**. No changes, erasures, or revisions shall be made on any Subdivision Plat after approval has been given by the Development Review Board and endorsed, in writing on the Plat, unless the revision is first resubmitted to the Development Review Board and the Development Review Board approves it. In the event that such Subdivision Plat is filed or recorded without complying with this requirement, the Plat shall be considered null and void.

4. **Public Acceptance of Facility Ownership**. The approval by the Development Review Board of a Subdivision Plat shall not be deemed to constitute or be evidence of acceptance by the town of any road, utility, easement, or open space shown on such Subdivision Plat. Although deemed to be private facilities prior to formal acceptance, all such facilities shall meet the standards established herein.

F. REQUIRED SUBMISSIONS

1. **Preliminary Plat**. The Preliminary Subdivision Plat shall consist of six (6) copies of one or more maps or drawings which may be printed or reproduced on paper with all dimensions shown in feet or decimals of a foot, drawn to a scale or not more than one hundred (100) feet or more to the inch, showing or accompanied by information on the following points unless waived by the Development Review Board:
   a. Proposed subdivision name or identifying title and the name of the Town.
   b. Name and address of record owner, subdivider, and designer of Preliminary Plat.
   c. Number of acres within the proposed subdivision, location of property lines, existing easements, buildings, water courses, and other essential existing physical features.
   d. The names of owners of record of adjacent acreage.
   e. The provisions of the zoning standards applicable to the area to be subdivided and any zoning district boundaries affecting the tract.
   f. The location and size of any existing sewer and water mains, culverts, and drains on the property to be subdivided.
   g. The width and location of any existing roads within the area to be subdivided and the width, location, grades, and road profiles of all roads or other public ways proposed by the Subdivider.
   h. Contour lines at intervals of five (5) feet of existing grades and of proposed finished grades where change of existing ground elevation will be five (5) feet or more.
   i. Date, true north point, and scale.
   j. Deed description and map of survey of tract boundary made and certified by a licensed land surveyor tied into established reference points, if available.
   k. Location of connection with existing water supply or alternative means of providing water supply to the proposed subdivision.
   l. Location of connection with existing sanitary sewage system or alternative means of treatment and disposal proposed.
   m. Provisions for collecting and discharging storm drainage, in the form of drainage plan.
   n. Preliminary designs of any bridges or culverts which may be required.
   o. The proposed lots with surveyed dimensions, certified by a licensed land surveyor, numbered and showing suggested building locations.
   p. The location of temporary markers adequate to enable the Development Review Board to locate readily and appraise the basic layout of the field. Unless an existing road intersection is shown, the distance along a road from one corner of the property to the nearest existing road intersection shall be shown.
   q. Locations of all parcels of land proposed to be dedicated to public use and the conditions of such dedication.
   r. Names identifying roads and streets; locations of street name signs and description of design of street name signs.
   s. The Preliminary Plat shall be accompanied by:
      (1) A vicinity map drawn at the scale of not over four hundred (400) to the inch to show the relation of the proposed subdivision to the adjacent properties and to the general surrounding area. The vicinity map shall show all the area within two thousand (2,000) feet of any property line of the proposed subdivision or any smaller area between the tract and all surrounding existing roads, provided any part of such a road used as part of the perimeter for the vicinity map is at least five hundred (500) feet from any boundary of the proposed subdivision. Within such area the vicinity map shall show the locations of existing roads, utilities, and easements.

(2) A list or verification of the applications for all required State permits applied for by the Subdivider. Approval of the subdivision application by the Development Review Board may be conditioned upon receipt of these permits.

t. **Endorsement**. Every Plat filed with the Town Clerk shall carry the following endorsement:

"Approved by the Development Review Board of the Town of Chester, Vermont as per findings of fact, dated ____day of _____, _____ subject to all requirements and conditions of said findings.
Signed this _____day of _____, _____ by
_____
_____, Development Review Board"

2. **Final Plat**. The Final Subdivision Plat shall consist of one or more sheets of drawings which conform to the following requirements: All sheets shall be linen, mylar black or blue-lined duplicating paper and shall be 18 inches x 24 inches or a multiple thereof in size. Such sheets shall have a margin of one and a half (1-1/2) inches outside of the border lines on the left side for binding, and a one quarter (1/4) inch margin outside the border along the remaining sides. Space shall be served thereon for endorsement by all appropriate agencies. The Final Plat shall be clearly and legibly drawn and shall provide all information required under Section 4.8(F)(1), including the Endorsement and Construction Drawings for all capital improvements.

3. **Surety Forfeiture**. If any required public investments have not been installed or maintained, or have been incorrectly installed, within the term of surety contracts provided for herein, such surety shall be forfeited to the Town which, upon receipt of the proceeds thereof, shall install or maintain the improvements as provided for in the surety contract. Such action by the Town shall not be deemed to constitute any acceptance of the improvements.

4.11 BOUNDARY LINE ADJUSTMENTS

Boundary Line Adjustments are adjustments to the dividing line between adjacent lots (see Definitions in Article 8).

A. In accordance with 24 V.S.A. §4464(c), these Bylaws authorize the Administrative Officer to review applications and issue permits for boundary line adjustments, provided that the applicant satisfies all of the following standards:

1. It meets the definition of a Boundary Line Adjustment;
2. It does not create any new lot as a result of the adjustment;
3. The Plan must show the requirements of Section F, Page 46 of these Bylaws;
4. It does not substantially change the nature of any previous subdivision;
5. It will not adversely impact access to any parcel;
6. It will not result in the development on any portion of a parcel that has been designated as open space as the result of a prior municipal permit or approval, or allow for the acreage of any open space parcel to be applied to the maximum density or minimum lot size for another parcel; and,
7. It will not create any nonconformities.

B. If any of these conditions are not clearly met to the satisfaction of the Administrative Officer, such boundary adjustments shall be subject to approval as a subdivision. In such cases, the applicant shall be responsible for any additional fees or submittals needed for DRB review.

C. An applicant for a boundary line adjustment shall provide the Administrative Officer with a complete boundary line adjustment application and a map of the property, drawn to scale.

D. In accordance with the recording requirements in Section 4.8 of these Bylaws, the applicant shall submit for recording a mylar and deeds within 180 days of the effective date of the permit issued for the boundary line adjustment. If the applicant fails to submit a mylar within 180 days, the permit expires and the applicant must re-apply.

ARTICLE 5 – SUBDIVISION STANDARDS

5.1 PLANNING STANDARDS

A. **Character of the Land**. All land to be subdivided shall be, in the judgment of the Development Review Board, of such a character that it can be used for building purposes without danger to public health or safety, or to the environment. Subdivisions proposed for lands characterized by periodic flooding, poor drainage, incapability to support structures, roads, and utilities; or other hazardous conditions, shall incorporate special design provisions which reflect these limitations.

B. **Flood Hazard Area**. Subdivision improvements shall be consistent with the Flood Damage Prevention Regulations in Section 2.13 and Article 6 of these Bylaws.

C. **Lot Layout**. The layout of lots shall conform to the requirements of the General Use Standards in Article 3, and shall be appropriate for the intended use. Side lot lines shall generally be at right angles to straight roads, or radial to curved road lines. Consideration in lot layout shall be given to topographic and soils conditions. Irregular lot layouts shall not be allowed, and excessive lot depth in relation to width shall be avoided. A depth-to-width ratio of 3:1 shall normally be considered a maximum.

D. **Preservation of Existing Features**. Due regard shall be given to the preservation and protection of existing features, trees, scenic points, brooks, streams, rock out-croppings, water bodies, other natural resources, and historic sites.

E. **Natural Cover**. Land shall be subdivided and improved in reasonable conformity to existing topography in order to minimize grading, cut and fill, and to retain, insofar as possible, the natural contours, limit storm water runoff and conserve the natural cover and soil.

5.2 ROAD DESIGN

A. **New Roads**. All new roads, bridges, culverts and drainage ditches shall be designed and constructed in conformance with the requirements of the *Town of Chester Road and Bridge Specifications* as most recently amended by the Legislative Body, as well as all Vermont Agency of Transportation Design Specifications.

B. **Layout and Frontage**.

1. The arrangements of roads in the subdivision shall provide for the continuation of existing roads in or between adjacent properties in order to create a logical system for convenient movement of traffic.
2. No land development shall be permitted on existing lots which do not either have frontage on a public road or public waters or, with the approval of the Development Review Board under subdivision review procedures, access to such a road or waters by a right-of-way of record at least 50 feet wide. The Development Review Board may approve a reduction in width to a minimum of 20feet provided that the drive serves only one lot and adequate, safe access will exist with such reduced width. (See Rights-of-Way in Subsection H.)
3. Lot frontage requirements apply to lots served by private development roads as well as lots served by public roads.

C. **Street Names**. All roads or streets shall be named subject to the approval of the Development Review Board. Street name signs shall be furnished and installed by the Subdivider. The type, size, and location shall be subject to the approval of the Development Review Board.

D. **Access Road.**

1. All private access roads shall be designed and constructed to conform to the *Town of Chester's Road and Bridge Specifications*.

2. All access roads that intersect with a town highway are subject to an Access Permit in accordance with the *Town of Chester Road and Bridge Specifications*.

3. Acceptance of private roads by the Town is subject to the approval of the Chester Selectboard pursuant to state law for the laying out of public rights-of-way. Construction of roads to these standards in no way ensures such acceptance. In the event the Selectboard agrees to accept a road associated with an approved subdivision, the terms of acceptance, including road construction standards, inspection, and maintenance, shall be prescribed in an agreement approved by the Selectboard. Such agreement may be included as a condition of subdivision approval, and such approval may specify the timing of development on subdivided lots to ensure coordination with the terms of the agreement between the Selectboard and subdivider.

4. If the access road to the subdivision is a Class 4 road, the Subdivider shall be required to improve the access to Chester Highway Construction Specification standards under the approval of the Selectboard.

E. **Sidewalks.** In subdivisions where the density is greater than one unit per acre, sidewalks, or a right-of-way for future sidewalks, may be required on at least one side of all roads by the Development Review Board. Sidewalks may be required in other zoning districts where deemed necessary by the Development Review Board.

F. **Pedestrian Access.** Where necessary, in the judgment of the Development Review Board, rights-of-way may be required to facilitate pedestrian circulation through the subdivision or to provide access to public lands or waters.

G. **Driveways.**

1. All driveways shall be designed and constructed to conform to the *Town of Chester's Road and Bridge Specifications*.
2. No parcel of land being subdivided will be permitted more than one access point. Additional accesses may be approved in the event that:
   a) The additional access is necessary to ensure vehicular and pedestrian safety; or,
   b) The strict compliance with this standard would, due to the presence of one or more physical features (e.g. rivers and streams, steep slopes, wetlands), result in a less desirable development or subdivision design than would be possible with the allowance of an additional access; or,
   c) A traffic management plan is developed in association with a planned unit development approved in accordance with Section 4.5.
3. Driveways shall not exceed a 15% grade, unless waived by the Development Review Board.

H. **Rights-of-Way.** In accordance with 24 V.S.A. §4412(3), rights-of-way for any existing lots that do not have frontage on a State or Town Highway require Subdivision approval by the Development Review Board and must conform to the *Town of Chester's Road and Bridge Specifications.* A right-of-way serving only one lot shall conform to the driveway standards. Two or more lots not having frontage on a public highway shall meet the road standards.

I. **Dead Ends**. Dead end roads are discouraged, but a suitable turnaround shall be provided if a dead end cannot be avoided due to site conditions. In such circumstances, turnarounds shall be provided at the termini of all dead ends, and the following standards shall apply:

1. "T" or "hammerhead" configurations:
   a) Minimum turning radius of 28 feet, measured along the edge of the street (i.e. curb line);
   b) Minimum length of each leg shall be 60 feet deep from the centerline and the same width as the roadway.
2. Cul-de-sac configurations are required for all roads 750 feet or longer in major subdivisions, and shall provide a minimum turn-around radius of 35 feet (travel portion of the roadway).

CUL-DE-SAC FOR DEAD END ROADS

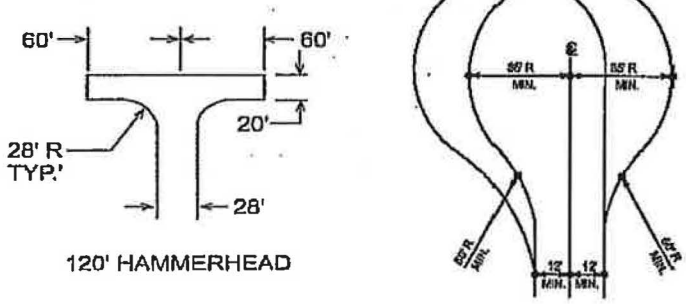

J. **Legal Requirements:** Every subdivision plat shall show all proposed road and pedestrian rights-of-way, as required under these Bylaws, regardless of whether the proposed right-of way is intended to be accepted by the town. In the event that the right-of-way is not intended for acceptance by the town, the mechanism by which the right-of-way is to be maintained, owned and/or conveyed shall be clearly documented under Section 5.5B.

K. **Modification of Road Standards:** In the case of unusual topographic conditions or other circumstances which would make the strict adherence to these standards a substantial hardship, not created by the applicant, the applicant may request a waiver under Section 7.17. When considering such a waiver the Development Review Board may modify the strict application of one or more of these standards providing the applicant can demonstrate that the proposed road:

1. Is accessible by emergency response vehicles;
2. Does not pose any threat to the safety of motorists or pedestrians;
3. Will not result in unreasonable maintenance requirements for landowners; and
4. Is designed in a manner that is consistent with other applicable standards of these Bylaws.

5.3 UTILITY DESIGN

A. **Easements**. The Development Review Board may require that utilities be placed either in the road right-of-way between the paved roadway and road line or placed horizontally underneath the roadway. Where inclusion of utilities in the road right-of-way is impractical, perpetual, unobstructed easements twenty (20) feet in width shall be provided with satisfactory access to the road.

B. **Extension of Municipal Utilities**. All subdivisions shall make adequate provisions for water supply, storm water, and sanitary sewage disposal, and required utilities and improvements. The Development Review Board may require the extension of public waters and sewers to and within a proposed subdivision, without cost to the municipality where existing lines are, in the judgment of the Development Review Board, within a reasonable distance of the proposed subdivision.

C. **Connection to Municipal Utilities**. All connections to municipal utilities shall be in compliance with all applicable Town ordinances. The Subdivider shall install laterals from all utilities to the road property line of each building lot. Any residential building constructed in the subdivision shall have house connections installed, and shall have such connections extended inside of the building. All such utility system installations shall be at the expense of the Subdivider.

D. **Utility Design**. Water and sewer utilities shall be designed by qualified professionals licensed by the State of Vermont.

E. **Water Supply Improvements**.

1. For subdivisions which will connect to municipal water supply system, applications for extensions to the municipal system shall be approved by the officers and agents of the municipality entrusted with the care and superintendence of the municipal water supply system.

2. The Development Review Board may require that a community water supply system unconnected to municipal systems be designed in such a way that it may eventually be connected to the public municipal water supply system.

F. **Sewage Disposal Improvements**.

1. For subdivisions which will connect to a municipal sewage disposal system, applications for extensions shall be approved by the officers and agents of the municipality entrusted with the care and superintendence of the municipal sewage disposal system.

2. The Development Review Board may require that community sewage disposal systems unconnected to a municipal system be designed in such a way that it may be connected eventually to a municipal sewage disposal system.

3. Individual sewage disposal systems are subject to approval from the state Wastewater Management Division.

4. Any lot(s) subdivided must have an approved on-site sewerage disposal permit or connection to the Municipal Sewer System.

5. Electric, Telephone, Cable T.V., Internet: The Subdivider shall show that power and communication utilities shall be provided for all lots.

G. **Fire Protection Facilities**. Adequate fire protection (i.e. water supply or cul de sac) within the subdivision shall be provided to the satisfaction of the Development Review Board and the Fire Chief. Where practicable, fire hydrants shall be installed by the Subdivider. The Development Review Board may require upgrades in order to provide adequate fire protection for subsequent subdivisions.

H. **Drainage Improvements**. An adequate storm water drainage system for the entire subdivision area shall be provided. The Subdivider may be required by the Development Review Board to carry away by pipe or open ditch any spring or surface water that may exist either previous to, or as a result of, the subdivision. A bridge, culvert, or other drainage facility shall be designed in accordance with the *Town of Chester Road and Bridge Specifications*. Where it is anticipated that additional runoff, incidental to the development of the subdivision, will overload an existing downstream drainage facility so that there will be drainage to private property or an increase in the expenditure of public funds, the Development

Review Board shall not approve the subdivision until provision has been made for the improvement of said condition. Where a subdivision is traversed by a water course or drainage way, there shall be provided a storm water drainage easement of such width as to encompass the 25-year flood area of such water course, which easement shall be indicated on the Final Plat. In design of the drainage system, natural waterways shall be utilized to the fullest extent feasible. Natural drainage courses should be extended across roads and not diverted into roadside drainage ditches.

5.4 CONSTRUCTION STANDARDS

A. **Erosion Control**. The smallest practical area of land should be exposed at any one time during development. When land is exposed during development, the exposure should be kept to the shortest practical period of time. Land should not be left exposed during the winter months. Where necessary, temporary vegetation and/or mulching and structural measures may be required by the Development Review Board to protect areas exposed during development.

B. **Construction Requirements**. Suitable fill material for any road, construction of the proper subgrade of any road, removal of stumps and other fibrous materials from any embankment, materials for and grading of embankments, side slopes in any embankment and on roadside ditches, and finish grades on all slopes and roads shall conform to the requirements of the *Town of Chester Road and Bridge Specifications*.

Side slopes shall not be graded so as to extend beyond the limits of the road right-of-way onto land not part of the subdivision unless a suitable slope easement has been properly established and granted by the affected property owner.

5.5 ADDITIONAL PLANNING REQUIREMENTS

A. **Park and Recreation Sites**. When a development will accommodate a total of more than twenty-five (25) dwelling units, the Development Review Board may require the Subdivider to reserve park and recreational sites, the size and type of which shall be determined by the Development Review Board based upon the number and type of dwellings. The Development Review Board may require a payment in lieu of these site reservations.

B. **Neighborhood Agreements**. When a development involves common land, water supply, sewer system or private roads/shared rights-of-way a neighborhood agreement or similar management organization to operate and maintain these facilities shall be required by the Development Review Board.

5.6 PROTECTION OF NATURAL AND CULTURAL RESOURCES

Subdivision applications shall show natural and cultural resources on site plans or plats as detailed in this Section.

A. **Suitability of Land for Subdivision.** All land to be subdivided shall be, in the judgment of the Development Review Board, of such a character that it can be used for intended purpose(s), as stated in the application, without danger to public health or safety, the environment, neighboring properties, or the character of the area or district in which it is located. To this end, the Development Review Board may require that applicants provide a detailed site analysis identifying all fragile features and natural and cultural resources described below, the impact of the proposed subdivision on those resources, and the protection measures proposed to avoid or mitigate those impacts.

B. **Establishment of Development Envelopes.** The Development Review Board may require the designation of development envelopes to protect natural and cultural resources described in this Section. Development envelopes, when required, shall be configured to limit the location of one or more site improvement on the subdivided lot, including principal and accessory structures, parking areas, and associated site development (excluding road and utility rights-of-way or easements). In the event no development envelope is required, subsequent development on the subdivided lot shall comply with all applicable zoning standards. The Board may require the identification of specific building footprints if, in their judgment, such information is required to meet the standards set forth in these Bylaws.

C. **Protection of Wetlands, Floodplains and Surface Waters**. Subdivision boundaries, lot layout and development envelopes shall be located and configured to avoid any adverse impact to wetlands, floodplains, streams and rivers. Methods for avoiding such impacts include but may not be limited to the following:

1. Lot boundaries and building sites shall be configured to prevent the fragmentation of floodplain or wetlands unless appropriate legal mechanisms are put in place to ensure permanent protection or mitigation.
2. Buffer areas shall be provided for in accordance with the standards under Section 3.28.
3. Shoreline, riparian areas and wetlands, and adjacent buffer lands, should be designated as open space.

D. **Protection of Wildlife Habitat & Forested Areas.** Subdivision boundaries, lot layout and development envelopes shall be located and configured to minimize adverse impacts on critical wildlife habitat identified in the *Chester Town Plan*, by the Vermont Department of Fish & Wildlife, or through site investigation. Development envelopes shall avoid known locations of rare, threatened or endangered species.

E. **Protection of Historic & Cultural Resources.** Subdivision boundaries, lot layout and development envelopes shall be located and configured to minimize adverse impacts to historic and archaeological sites and resources identified in the *Chester Town Plan*, by the Vermont Division for Historic Preservation, or through site investigation.

F. **Protection of Farm Land.** Recommend that subdivision boundaries, lot layout and development envelopes to be located to minimize impacts to prime agricultural soils.

(H) **Modifications for Compact Development.** Notwithstanding this section, the Development Review Board may waive or modify one or more of the above standards within the VC, SV or RC Districts, or within a planned unit developments, in the event the Board determines that the benefits of modification would result in a more desirable settlement pattern, and the impacts on identified resources can be mitigated either on or off site.

ARTICLE 6 – FLOOD DAMAGE PREVENTION STANDARDS

6.1 BASE FLOOD ELEVATIONS AND FLOODWAY LIMITS

A. Where available, base flood elevations and floodway limits (or data from which a community can designate regulatory floodway limits) provided by the National Flood Insurance Program in the Flood Insurance Study and accompanying maps, referred to in Section 2.13(B), shall be used to administer and enforce these Bylaws.

B. In areas where base flood elevations and floodway limits have not been provided by the National Flood Insurance Program in the Flood Insurance Study and accompanying maps, the Administrative Officer shall obtain and reasonably utilize base flood elevations and floodway data provided by FEMA or available from State or Federal agencies or other sources, including data developed pursuant to Section 6.2(C)3 or 4, to administer and enforce these Bylaws. "Available" base flood elevations and floodway data means existing and readily available from State or Federal agencies or from data previously obtained pursuant to 6.2 (C).3 or 4. The reference for this action is to be FEMA 265 "Managing Floodplain Development in Approximate Zone A Areas: A Guide for Obtaining and Developing Base Flood Elevation," dated July 1995.

C. In special hazard areas with base flood elevations (Zones AE and A1 – A30) but without floodways, no encroachments, including fill material or structures, shall be permitted unless certification by a registered professional engineer is provided demonstrating that the cumulative effect of the proposed development, when combined with all other existing and anticipated development, will not increase the water surface elevation of the base flood more than one foot at any point within the community. The engineering certification must be supported by technical data that conforms to standard hydraulic engineering principles.

6.2 DEVELOPMENT STANDARDS

A. **All Development**. All development within the SFHA shall be reasonably safe from flooding and:
1. designed (or modified) and adequately anchored to prevent flotation, collapse, or lateral movement of the structure during the occurrence of the base flood,
2. constructed with materials resistant to flood damage,
3. constructed by methods and practices that minimize flood damage, and
4. constructed with electrical, heating, ventilation, plumbing and air conditioning equipment and other service facilities that are designed and/or located so as to prevent water from entering or accumulating within the components during conditions of flooding.
5. New mobile home parks, junkyards and storage facilities for floatable materials, chemicals, explosives, flammable liquids, or other hazardous or toxic materials are prohibited within the SFHA. There are no existing mobile home parks in the SFHA.

B. **Floodway Areas**.
1. Development within the regulatory floodway, as determined by Section 6.1, is prohibited unless it has been demonstrated through hydrologic and hydraulic analyses performed in accordance with standard engineering practice by a registered professional engineer certifying that the proposed development will result in no increase in flood levels during the occurrence of the base flood.
2. Encroachments, including fill, new construction, substantial improvements and other developments, in the floodway are prohibited unless certification (with supporting technical data) by a registered professional engineer is provided demonstrating that the encroachments shall not result in any increase in flood levels during occurrence of the base flood discharge.

3. All development in the regulatory floodway shall meet the standards of Section 6.2(c).

C. **Floodway Fringe Areas** (i.e., special flood hazard areas outside of the floodway).

1. **Residential Development**:
   a. New construction and existing buildings, including manufactured homes, to be substantially improved that are located in Zones A1-30, AE, AO and AH shall have the lowest floor, including basement, elevated to one foot above the base flood elevation. New construction and existing buildings to be substantially improved that are located in Zone AO shall have the lowest floor, including basement, elevated above the highest adjacent grade at least as high as the depth number specified in the feet on the community's FIRM or at least two feet if no depth number is specified.
   b. Manufactured homes to be placed and existing manufactured homes, which have incurred substantial damage or are to be substantially improved, that are:
      (1) located in a new manufactured home park or subdivision, outside of a manufactured home park or subdivision, in an expansion to an existing manufactured home park or subdivision, or in a manufactured home park or subdivision which has incurred substantial damage from a flood shall be elevated on a permanent foundation such that the lowest floor of the manufactured home is elevated to one foot above the base flood elevation and be securely anchored to an adequately anchored foundation system to resist floatation, collapse, and lateral movement during the occurrence of the base flood. The required elevation and adequate anchoring must be certified in writing by a Vermont registered professional engineer.
      (2) located in an existing manufactured home park, where elevating a replacement home to or above base flood elevation is not possible, the lowest floor shall be supported by reinforced piers or other foundation elements of at least equivalent strength that are no less than 48 inches in height above grade and be securely anchored to an adequately anchored system to resist floatation, collapse, and lateral movement. The required elevation and adequate anchoring must be certified in writing by a Vermont registered professional engineer.
   c. Residential construction located within Zones AH and AO shall have adequate drainage paths around structures on slopes, to guide floodwater around and away from the proposed structures.

2. **Nonresidential Development**:
   a. New construction located in Zones A1-30, AE, and AH (all of which have elevations) shall have the lowest floor, including basement, elevated to one foot above the base flood elevation. New construction located in Zone AO shall have the lowest floor, including basement, elevated above the highest adjacent grade at least as high as the depth number specified in the feet on the community's FIRM or at least two feet if no depth number is specified.
   b. Existing buildings to be substantially improved located in Zones A1-30, AE, and AH shall have the lowest floor, including basement, elevated to one foot above the base flood elevation or together with attendant utility and sanitary facilities be designed so that below one foot above the base flood elevation the structure is watertight with walls substantially impermeable to the passage of water and with structural components having the capability of resisting hydrostatic and hydrodynamic loads and effects of buoyancy. Existing buildings to be substantially improved located in AO zones shall have the lowest floor, including basement, elevated above the highest adjacent grade at least as high as the depth number specified in feet on the community's FIRM or at least two feet if no depth number is specified or together with attendant utility and sanitary facilities be designed so that below the base flood elevation the structure is watertight with walls substantially impermeable to the passage

of water and with structural components having the capability of resisting hydrostatic and hydrodynamic loads and effects of buoyancy.

c. A permit for a building proposed to be flood proofed shall not be issued until a Vermont licensed registered professional engineer or architect has reviewed the structural design, specifications and plans, and has certified that the design and proposed methods of construction are in accordance with accepted standards of practice for meeting the provisions of this subsection.

d. Nonresidential construction located within Zones AH and AO shall have adequate drainage paths around structures on slopes, to guide floodwater around and away from the proposed structures.

3. **Residential and Nonresidential Development in SFHA where BFE or floodway data is not available.** When base flood elevation data or floodway data are not available in accordance with Section 2.13(B) and Section 6.1 (B), in Special Flood Hazard Areas without Base Flood Elevation Data, new construction or substantial improvements of residential structures and new construction of nonresidential structures shall be elevated, and substantially improved nonresidential development shall be elevated or flood proofed, to elevations adopted / established by the community. If flood proofed as provided in the previous sentence, the flood proofing shall be to the standards of Section 6.2 (C)(2) (b) and (c). The administrator officer shall obtain, review and reasonably utilize any base flood elevation and floodway data available from a federal, state or other source, in order to administer the provisions of the provisions of this regulation. The reference for this action is to be FEMA 265 "Managing Floodplain Development in Approximate Zone A Areas: A Guide for Obtaining and Developing Base Flood Elevation", dated July 1995.

4. **Subdivisions**:

a. New subdivision proposals and other proposed development (including proposals for manufactured home parks and subdivisions) that are greater than 50 lots or 5 acres, whichever is the lesser, shall include base flood elevation data.

b. Subdivisions (including manufactured home parks) shall be designed to assure:
   (1) such proposals minimize flood damage within the flood-prone area,
   (2) public utilities and facilities, such as sewer, gas, electrical, and water systems are located and constructed to minimize or eliminate flood damage, and
   (3) adequate drainage is provided to reduce exposure to flood hazards.

5. **Enclosed Areas Below the Lowest Floor**:

a. Enclosed areas below the lowest floor which are subject to flooding shall be used solely for parking of vehicles, building access, or storage.

b. New construction and existing buildings to be substantially improved with fully enclosed areas below the lowest floor that are subject to flooding shall be designed to automatically equalize hydrostatic flood forces on exterior walls by allowing for the entry and exit of floodwaters.

c. Designs for meeting this requirement must either be certified by a registered professional engineer or architect or meet or exceed the following minimum criteria: A minimum of two openings having a total net area of not less than one square inch for every square foot of enclosed area subject to flooding shall be provided. The bottom of all openings shall be no higher than one foot above grade. Openings may be equipped with screens, louvers, valves, or other coverings or devices provided that they permit the automatic entry and exit of floodwaters.

6. **Recreational Vehicles**. Recreational Vehicles placed on sites with special flood hazard areas shall either:
   a. be on the site for fewer than 180 consecutive days,
   b. be fully licensed and ready for highway use, or
   c. be permitted in accordance with the elevation and anchoring requirements for "manufactured homes" in section 6.2(c)(1)(b).

7. **Accessory Structures**. A small accessory building that represents a minimal investment need not be elevated to the base flood elevation provided the building meets the following requirements:
   a. The structure must only be used for parking or storage,
   b. The structure must have the required openings to allow floodwaters in and out,
   c. The structure must be constructed using flood resistant materials below the Base Flood Elevation,
   d. The structure must be adequately anchored to resist flotation, collapse, and lateral movement, and
   e. all building utility equipment including electrical and heating must be elevated or flood proofed.

8. **Water Supply Systems**. New and replacement water supply systems shall be designed to minimize or eliminate infiltration of flood waters into the systems.

9. **Sanitary Sewage Systems**. New and replacement sanitary sewage systems shall be designed to minimize or eliminate infiltration of flood waters into the systems and discharges from the systems into flood waters.

10. **On-Site Waste Disposal Systems**. On-site waste disposal systems shall be located to avoid impairment to them or contamination from them during flooding.

11. **Watercourse Carrying Capacity**. The flood carrying capacity within any altered or relocated portion of a watercourse shall be maintained.

12. **Electrical, heating, ventilation, plumbing, air conditioning equipment and other service facilities** shall be designed and/or located so as to prevent water from entering or accumulating within the components during conditions of flooding, such facilities shall be located a minimum of one foot above the Base Flood Elevation;

13. **Bulk or individual fuel storage tanks**. All fuel storage tanks shall be located a minimum of one foot above the Base Flood Elevation and be tied down to prevent flotation. No underground fuel storage tanks are allowed.

14. **All development**. Until a regulatory floodway is designated, in Zones A1-30 and AE the requirements of Section 6.1(C) shall be met.

ARTICLE 7 – ADMINISTRATION & ENFORCEMENT

7.1 ADMINISTRATIVE OFFICER

A. The Selectboard shall appoint an Administrative Officer from nominations submitted by the Planning Commission for a term of three (3) years in accordance with the Act [§4448]. The Selectboard may remove an Administrative Officer for cause at any time after consultation with the Planning Commission.

An acting Administrative Officer may be appointed by the Selectboard, from nominations submitted by the Planning Commission, who shall have the same duties and responsibilities of the Administrative Officer in the Administrative Officer's absence. In the event an acting Administrative Officer is appointed, the Selectboard shall establish clear policies regarding the authority of the Administrative Officer relative to the authority of the acting Administrative Officer.

The Administrative Officer shall literally administer and strictly enforce the provisions of these Bylaws, and in doing so shall inspect development, maintain records, and perform other related tasks as is necessary and appropriate.

In addition, the Administrative Officer shall coordinate the municipality's development review programs. If other municipal permits or approvals are required, the Administrative Officer shall provide the applicant with necessary forms. The Administrative Officer shall inform any person applying for municipal permits or authorizations that they should contact the Vermont Agency of Natural Resource's Regional Permit Specialist to assure timely action on any related state permits. The applicant retains the obligation to identify, apply for, and obtain relevant state permits.

B. **FLOOD PLAIN ADMINISTRATOR.**

1. **Designation of the Administrative Officer for These Flood Damage Prevention Regulations.** The Selectboard of the Town of Chester hereby appoints the Chester Zoning Administrator to administer and implement the *Flood Damage Prevention* provisions of these Bylaws and is herein referred to as the Administrative Officer.

2. **Duties and Responsibilities of the Administrative Officer.** The Administrative Officer is hereby authorized and directed to enforce the provisions of this ordinance. The Administrative Officer is further authorized to render interpretations of this ordinance, which are consistent with its spirit and purpose. Duties of the Administrative Officer shall include, but not be limited to:

    a. Review all development permits to assure that the permit requirements of this ordinance have been satisfied;
    b. Advise permit applicant that additional federal or state permits may be required, and if specific federal or state permit requirements are known, require that copies of such permits be provided and maintained on file with the development permit. Require permit applicant to obtain a Permit Review Sheet from the Agency of Natural Resources and attach it to the permit application. (See Section 4.7.A.2.e)
    c. Notify adjacent communities and the Stream Alteration Engineer at the Vermont Agency of Natural Resources, Department of Environmental Conservation, River Management Section at least 30 days prior to issuing any permit for the alteration or relocation of a watercourse and copies of such notification shall be submitted to the Administrator of the National Flood Insurance Program. Any permit issued shall assure that the flood carrying capacity within the altered or relocated portion of any watercourse is maintained.

d. Assure that maintenance is provided within the altered or relocated portion of said watercourse so that the flood-carrying capacity is not diminished.
e. Where base flood elevation (BFE) data in relation to mean sea level are available per Section 7 from the Flood Insurance Rate Map (FIRM) or other available data, verify and record the actual elevation (in relation to mean sea level) of the lowest floor (including basement) of all new or substantially improved buildings, and verify that actual elevation of the lowest floor is in compliance with Section 8.
f. When no elevation data is available as provided in Section 7, in AO Zones and A Zones without elevations, verify and record the elevation of the lowest floor of the proposed structure in relation to highest adjacent grade and verify that the elevation of the lowest floor exceeds by one foot the elevation determined pursuant to Section 6.1.B, below.
g. Verify and record the actual elevation (in relation to mean sea level) to which the new or substantially improved buildings have been flood-proofed, in accordance with Section 8, except as provided in Article 6.
h. Review certified plans and specifications for compliance.
i. Where interpretation is needed as to the exact location of boundaries of the areas of special flood hazard (determination of the horizontal limits only, not vertical) the Administrative Officer shall make the necessary interpretation. The person contesting the location of the boundary may appeal the interpretation to the Development Review Board (DRB).
j. When base flood elevation data or floodway data have not been provided in accordance with Section 3., then the Administrative Officer shall obtain, review and reasonably utilize any base flood elevation and floodway data that is available from a federal, state or other source, as provided in Section 7, in order to administer the provisions of Section 8. At his or her discretion the Administrative Officer may require the applicant to obtain this data or hire a Vermont licensed engineer or surveyor to obtain or create and certify this data on behalf of the applicant.
k. When an application for a permit for development in a SFHA is received by the Administrative Officer, the Administrative Officer shall submit a copy of the application and supporting information to the State National Floodplain Insurance Program Coordinator at the Vermont Agency of Natural Resources, Department of Environmental Conservation, River Management Section in accordance with 24 V.S.A. § 4424(2)(D). A permit may be issued only following receipt of comments from the Agency or the expiration of 30 days from the date the application was mailed to the Agency, whichever is sooner.
l. Provide information, testimony, or other evidence, as needed, during variance request hearings.
m. When damage occurs to a building or buildings, the following actions shall be conducted:
   (1) Determine whether damaged structures are located within the Special Flood Hazard Area;
   (2) Conduct damage assessments for those damaged structures located in the SFHA, and;
   (3) Make a reasonable attempt to notify owner(s) of damaged structure(s) of the requirement to obtain a building permit / floodplain development permit prior to repair, rehabilitation, or reconstruction.

3. **Responsibilities: Record Keeping.** The Administrative Officer shall maintain a record of:
   a. All permits issued for development in areas of special flood hazard;
   b. The elevation (consistent with the datum of the elevation on the NFIP maps for the community) in relation to mean sea level, or where base flood elevation data is not available, in relation to the highest adjacent grade, of the lowest floor, including basement, of all new or substantially improved buildings;
   c. The elevation (consistent with the datum of the elevation on the NFIP maps for the community) in relation to mean sea level to which buildings have been flood proofed;
   d. All flood proofing certifications required under this regulation; and

e. All variance actions as required under Section 7.16.

7.2 PERMIT
As provided in Section 1, and except as provided in Section 4.2, before any land development a permit shall be obtained from the Administrative Officer. The permit application shall be submitted to the Administrative Officer with a sketch or plan prepared by the Applicant of the boundaries of the lot, with the distance of each boundary and with the dimensions adequately showing the position of the proposed building, structure, alteration or extension in relation to the boundaries of the lot and any buildings thereon. The Administrative Officer shall inspect the site of the proposed land development and shall act upon the application within thirty (30) days from the time it was filed. If the Administrative Officer fails to act within thirty (30) days the permit shall be deemed issued on the thirty-first (31st) day from the day application was filed.

In accordance with 24 V.S.A §4414, no construction shall take place under a zoning permit unless and until a wastewater and potable water supply permit has been issued under 10 V.S.A. Chapter 64.

7.3 EFFECTIVE DAY OF PERMIT
A Zoning Permit shall not take effect until fifteen (15) days after the date of issuance. In the event a Notice of Appeal is properly filed by an interested person as defined in Title 24, Vermont Statutes Annotated, Chapter 117, Section 4464 within fifteen (15) days from issuance of a permit, such permit shall not take effect until final adjudication of said appeal.

7.4 TIME LIMIT ON PERMITS
If no land development has been started, a maximum limit of two (2) years from the date of issuance of a Zoning Permit shall be the time of expiration of such permit. If a Zoning Permit expires prior to the start of construction a new permit must be applied for.

7.5 CERTIFICATIONS
After the effective date of these Bylaws, the Development Review Board may require, as a condition of approval, that an appropriately licensed professional certify to the Zoning Administrator, that the development and related improvements were installed in accordance with the conditions of approval and meet the standards of these Bylaws.

7.6 FEES
Fees for all applications required under these Bylaws shall be set by the Legislative Body. The Legislative Body shall review its established fees periodically to insure that they cover the cost of published public notices, holding public hearings and inspecting the installation of public investments.

7.7 RECORDS
The Administrative Officer shall maintain and keep on file, and available to the public, full and accurate records of all Bylaws, Amendments, the Zoning Map, written Zone Boundary descriptions, Building Permits, Variances, Conditional Uses, Site Plan Reviews, Subdivisions and pending Appeals.

7.8 PLANNING COMMISSION
A. The Planning Commission shall consist of not less than three (3) or more than nine (9) members appointed by the Selectboard in accordance with the Act [§§4321– 4323]. At least a majority of members shall be residents of the municipality. Any member of the Planning Commission may be removed at any time by a unanimous vote of the Selectboard.

B. The Planning Commission shall adopt rules of procedure deemed necessary and appropriate for the performance of its functions as required under the Act [§4323(b)] and Vermont's Open Meeting Laws. In accordance with the Act, the Planning Commission shall have the following duties in association with these Bylaws:

1. Prepare proposed amendments to these Bylaws, and consider proposed amendments submitted by others, include amendments submitted by petition as set forth in the Act [4441(b)];
2. Prepare and approve written reports on any proposed amendment to these Bylaws as required by the Act [§4441(c)]; and
3. Hold one or more warned public hearings on proposed amendments to these Bylaws, prior to submission of a proposed amendment and written report to the Legislative Body [§4441(d)].

7.9 **DEVELOPMENT REVIEW BOARD**
A. Development Review Board is hereby established. Except as specifically provided herein and in accordance with the provisions of 24 V.S.A., Chapter 117, the Development Review Board shall not amend, alter, invalidate or affect any bylaw of the Town of Chester or the implementation or enforcement thereof; nor shall it allow any use or structure not permitted by the zoning standards.

B. The Legislative Body shall appoint a Development Review Board consisting of not less than five (5), nor more than nine (9) persons. Appointments are made in June with the term being three years. Vacancies shall be filled by the Selectboard for the unexpired term. The Selectboard also may appoint alternates, for specified terms, to serve on the Board in situations when one or more members of the Board are disqualified or are otherwise unable to serve. Any member of the Development Review Board may be removed for cause by the Selectboard upon written charges and after public hearing [§4460 (c)].

C. The Development Review Board shall elect its own officers and adopt rules of procedure, including the requirement that the DRB shall hold a properly noticed site visit at a set time before the hearing on any application, subject to the provisions of these Bylaws and the Act. The officers of the Board will administer oaths and compel the attendance of witnesses and the production of material pertinent to any issue under appeal.

D. Meetings of the Board shall be held at the call of the chairman and at such times as the Board may determine. All meetings of the Board, except for deliberative sessions, shall be open to the public.

E. The Board shall adopt rules of ethics with respect to conflicts of interest to guide its official conduct, as required under the Act [§4461(a)] and Vermont's Open Meeting Law. The Board shall have all powers

and duties as set forth in the Act to administer the provisions of these Bylaws, including but not limited to the power to hear and act upon:

1. Appeals from any decision, act or failure to act by the Administrative Officer (Section 7.12), and any associated variance requests (Section 7.16);
2. Applications for conditional use approval (Section 4.5), including approvals required for the Flood Damage Prevention Overlay District (Sections 2.13, 4.7);
3. Applications concerning nonconformities (Sections 3.19);
4. Requests for variances (see Section 7.16);
5. Requests for waivers (see Section 7.17)
6. Applications for rights-of-way or easements for development lacking frontage (Section 5.2);
7. Applications for planned unit development (Section 4.6);
8. Applications for subdivision approval (See Section 4.8);
9. Applications for wireless telecommunications facilities (See Section 3.2); and
10. Any other reviews required by the Bylaws.

7.10 VIOLATIONS & ENFORCEMENT

The commencement or continuation of any land development that does not meet the requirements of these Bylaws shall constitute a violation. , The Administrative Officer shall institute in the name of the Town of Chester any appropriate action, injunction or other proceeding to prevent, restrain, correct or abate all violations.

No action may be brought unless the alleged offender has had at least a seven-day warning notice by certified mail. An action may be brought without the seven-day notice and opportunity to cure if the alleged offender repeats the violation after the seven-day notice period and within the next succeeding twelve months. The seven-day warning notice shall state that a violation exists, that the alleged offender has an opportunity to cure the violation within the seven days, and that the alleged offender will not be entitled to an additional warning notice for a violation occurring after the seven days.

A violation of this Ordinance shall be a civil matter enforced in accordance with the provisions of 24 VSA 1974(a) et. seq. and as described below:

A penalty of $100 shall be imposed for the initial violation of any provision of this Ordinance. The penalty for the second offense within a one-year period shall be $250.00 and the penalty for each subsequent violation within a one-year period shall be $500.00. As per statute, in cases where a violation is not contested, a "waiver fee" shall be paid in the amounts of: $50.00 for the first offense, $125.00 for the second offense and $250.00 for each subsequent offense within a one year period. Each day that a violation continues will constitute a separate violation of these Bylaws.

If the above enforcement strategy is not sufficient to deter violations, enforcement proceedings may also be initiated pursuant to 24 VSA 4451, et. Seq. as they exist or are hereafter amended or revised. These additional penalties may be up to $100.00 per day (with each day constituting a separate violation), and issuance of injunctions.

For the purposes of Flood Hazard Prevention enforcement, if a structure is still noncompliant after the opportunity to cure has passed, the Administrative Officer shall submit a declaration to the Administrator of the NFIP requesting a denial of flood insurance. Section 1316 of the National Flood Insurance Act of 1968, as amended, authorizes FEMA to deny flood insurance to a property declared by a community to be in violation of their flood hazard area regulations. The declaration shall consist of: (a) the name of the property owner and address or legal description of the property sufficient to confirm its identity or location, (b) a clear and unequivocal declaration that the property is in violation of a cited State or local

law, regulation, or ordinance, (c) a clear statement that the public body making the declaration has authority to do so and a citation to that authority, (d) evidence that the property owner has been provided notice of the violation and the prospective denial of insurance, and (e) a clear statement that the declaration is being submitted pursuant to Section 1316 of the National Flood Insurance Act of 1968, as amended.

Issuing officials authorized to enforce this Ordinance include the Chester Zoning Administrator and the Town Manager.

7.11 APPEALS

A. Any interested person as defined under the Act [§4465] may appeal a decision or act of the Administrative Officer within 15 days of the date of the decision or act by filing a notice of appeal with the Secretary of the appropriate municipal panel, or the Municipal Clerk if no Secretary has been elected, and by filing a copy of the notice with the Administrative Officer.

1. The Board shall hold a public hearing on a notice of appeal within 60 days of its filing, as required under the Act [§4468]. The Board shall give public notice of the hearing as provided in this Section (below), and mail a copy of the hearing notice to the appellant not less than 15 days prior to the hearing date.

2. The Board may reject an appeal or request for reconsideration without hearing, and render a decision which shall include findings of fact within 10 days of the filing of a notice of appeal, if the Board determines that the issues raised by the appellant have been decided in an earlier appeal or are based on substantially or materially the same facts by or on behalf of the appellant [§4470].

3. In accordance with the Act [§4468], all appeal hearings shall be open to the public and the rules of evidence applicable at these hearings shall be the same as the rules of evidence applicable in contested cases in hearings before administrative agencies as set forth in state statutes [3 V.S.A. §810]. Any interested person or body may appear and be heard in person or be represented by an agent or attorney at the hearing. The hearing may be recessed by the Board from time to time, provided that the date and place that the hearing shall continue is announced at the hearing.

4. A decision on appeal shall be rendered within 45 days after the final adjournment of the hearing, as required under the Act [§4464(b)]. The decision shall be sent by certified mail to the appellant within the 45 day period. Copies of the decision shall be mailed to every person or body appearing and having been heard at the hearing, and filed with the Administrative Officer and the Municipal Clerk as part of the public records of the municipality, in accordance with the Act [§4464(b)(3)]. Failure of the appropriate municipal panel to issue a decision within this 45 day period shall be deemed approval and shall be effective on the 46th day.

5. A decision on appeal is final on the 31st day after the decision is rendered or deemed approved for failure to render a decision, or, if appealed to the courts, on the completion of the appeal process.

B. Appeal of Administrative Officer's Decision. In the exercise of its function hereunder the Development Review Board shall hear and decide appeals taken under this Section, including without limitation, where it is alleged that an error has been committed in any order, requirement, decision or determination made by an Administrative Officer under this Chapter in connection with enforcement of a By-law.

C. Conditions. In rendering a decision in favor of an appellant, the Development Review Board may attach such conditions as it may consider necessary and appropriate.

D. Decisions. The Development Review Board shall mail a copy of the Findings of Fact to the following persons:

1. The Appellant, by certified mail;
2. Any interested person present and heard at the public hearing;
3. The Administrative Officer; and
4. File a copy with the Town Clerk for the public record.

E. Approval by Default. If the Development Review Board does not render its decision on an appeal within forty-five (45) days, the Board shall be deemed to have rendered a decision in favor of the Appellant and granted relief requested by the Appellant on the forty-fifth (45th) day.

7.12 INTERESTED PERSONS

The definition of an interested person under the Act [§4465(b)] includes the following:

1. The Town of Chester or an adjoining municipality;

2. A person owning or occupying property in the immediate neighborhood of a property which is the subject of a decision or act taken under these Bylaws, who can demonstrate a physical or environmental impact on the person's interest under the criteria reviewed, and who alleges that the decision or act, if confirmed, will not be in accord with the policies, purposes or terms of the plan or regulations of the municipality;

3. Any ten (10) voters or property owners within the municipality who, by signed petition to the appropriate municipal panel, allege that any relief requested by a person under this section, if granted, will not be in compliance with the policies, purposes or terms of the plan or regulations of the municipality; and

4. Any department or administrative subdivision of the state owning property or any interest therein within the municipality or adjoining municipality, and the Vermont Agency of Commerce and Community Development.

7.13 NOTICE OF APPEAL TO THE DEVELOPMENT REVIEW BOARD

A notice of appeal filed under this section shall be in writing and include the following information, in accordance with the Act [§4466]:

1. The name and address of the appellant;
2. A brief description of the property with respect to which the appeal is taken;
3. A reference to applicable provisions of these Bylaws;
4. The relief requested by the appellant, including any request for a variance from one or more provisions of these Bylaws; and
5. The alleged grounds why such relief is believed proper under the circumstances.

7.14 APPEALS TO ENVIRONMENTAL COURT

In accordance with the Act [§4471], an interested person who has participated in a regulatory proceeding of the Zoning Development Review Board may appeal a decision rendered by the panel under Section 10.9, within 30 days of such decision, to the Vermont Environmental Court. Appeals to Environmental Court shall also meet the following requirements:

1. "Participation" in a panel proceeding shall consist of offering, through oral or written testimony,

evidence of a statement of concern related to the subject of the proceeding.

2. The notice of appeal shall be filed by certified mailing, with fees, to the Environmental Court and by mailing a copy to the Municipal Clerk, or the Administrative Officer if so designated, who shall supply a list of interested persons (including the applicant if not the appellant), to the appellant within five (5) working days. Upon receipt of the list of interested persons, the appellant shall, by certified mail, provide a copy of the notice of appeal to every interested person. If any one or more of those persons are not then parties to the appeal, upon motion they shall be granted leave by the court to intervene.

7.15 VARIANCE

A. Wherein a Variance from the zoning provisions of these Bylaws is requested for a structure on an existing lot that is not primarily a renewable energy resource structure, the Development Review Board may grant a Variance and render a decision in favor of the appellant, if all the following facts are found and the findings are specified in the decision. The decision on an appeal for a Variance shall be rendered within forty-five (45) days of the date of the public final hearing.

1. That there are unique physical circumstances or conditions, including irregularity, narrowness, or shallowness of the lot size or shape, or exceptional topographical or other physical conditions peculiar to the particular property, and that the unnecessary hardship is due to such conditions and not the circumstances or conditions generally created by the provisions of these Bylaws in the neighborhood or district in which the property is located.

2. That because of such physical circumstances or conditions, there is no possibility that the property can be developed in strict conformity with the provisions of these Bylaws and that the authorization of a Variance is, therefore, necessary to enable the reasonable use of the property.

3. That the unnecessary hardship has not been created by the appellant.

4. That the Variance, if authorized, will not alter the essential character of the neighborhood or district in which the property is located, nor substantially or permanently impair the appropriate use or development of adjacent property, reduce access to renewable energy resources, nor be detrimental to the public welfare; and

5. That the Variance, if authorized, will represent the minimum Variance that will afford relief and will represent the least deviation possible from these Bylaws and from the Plan.

B. Variances to Flood Damage Prevention Standards. Variances shall be granted by the DRB only in accordance with 24 V.S.A. §4469 and in accordance with the criteria for granting variances found in 44 CFR, Section 60.6, of the National Flood Insurance Program regulations.

1. **Matters to be Considered in Variance Procedures.** In passing upon such applications, in addition to the requirements of said § 4469, the DRB shall consider all technical evaluations, all relevant factors, standards specified in other sections of these Bylaws , and:
   a. The danger that materials may be swept onto other lands to the injury of others;
   b. The danger of life and property due to flooding or erosion damage;
   c. The susceptibility of the proposed facility and its contents to flood damage and the effect of such damage on the individual owner;
   d. The importance of the services provided by the proposed facility to the community;
   e. The necessity to the facility of a waterfront location, where applicable;

f. The availability of alternative locations for the proposed use which are not subject to flooding or erosion damage;
g. The compatibility of the proposed use with existing and anticipated development;
h. The relationship of the proposed use to the comprehensive plan and floodplain management program for that area;
i. The safety of access to the property in times of flood for ordinary and emergency vehicles;
j. The expected heights, velocity, duration, rate of rise, and sediment of transport of the flood waters and the effects of wave action, if applicable, expected at the site; and,
k. The costs of providing governmental services during and after flood conditions, including maintenance and repair of public utilities and facilities such as sewer, gas, electrical, and water systems, and streets and bridges.
l. Upon consideration of factors listed above, and the purpose of these Bylaws, the DRB may attach such conditions to the granting of variances as it deems necessary to further the purposes of these Bylaws.

2. **Procedures for Variance Hearings.** In addition to the requirements of 24 VSA §4469, in considering variances to these flood hazard area Bylaws, the DRB shall follow the following procedures, which include the procedures for the granting of variances found in 44 CFR, Section 60.6, of the National Flood Insurance Program regulations:
   a. No-Impact Certification within the Floodway. Variances shall not be issued within any designated floodway if any impact in flood conditions or increase in flood levels during the base flood discharge would result. A No-Impact Certification within the Floodway from A Vermont registered professional engineer is required to satisfy this prohibition set forth in 44 CFR, Section 60.6(a)(1).
   b. Variances may be issued for new construction and substantial improvement to be erected on a lot of one-half acre or less in size contiguous to and surrounded by lots with existing structures constructed below the base flood level, in conformance with the procedures set forth in 9B. 3, 4, 5 and 6 herein.
   c. Variances shall only be issued when there is:
      (1) A showing of good and sufficient cause;
      (2) A determination that failure to grant the variance would result in exceptional hardship to the applicant; and,
      (3) A determination that the granting of a variance will not result in increased flood heights, additional threats to public safety, extraordinary public expense, create nuisances, cause fraud on or victimization of the public, or conflict with existing local laws or ordinances;
   d. Variances shall only be issued upon a determination that the variance is the minimum necessary, considering the flood hazard, to afford relief;
   e. Any applicant to whom a variance is granted shall be given written notice over the signature of a community official that:
      (1) The issuance of a variance to construct a structure below the base flood elevation will result in increased premium rates for flood insurance up to amounts as high as $25 for $100 of insurance coverage, and,
      (2) Such construction below the base flood level increases risks to life and property.

      A copy of the notice shall be recorded by the Administrative Officer in the Office of the Town Clerk and shall be recorded in a manner so that it appears in the chain of title of the affected parcel of land.

   f. The Administrative Officer will maintain a record of all variance actions, including justification for their issuance, and report such variances issued in the community's annual or

biennial report submission to the Federal Emergency Management Agency or State NFIP Coordinator upon request.

g. **Historic Structures.** Variances may be issued for the repair or rehabilitation of "historic structures" upon a determination that the proposed repair or rehabilitation will not preclude the structure's continued designation as an "historic structure" and the variance is the minimum to preserve the historic character and design of the structure.

h. Variances may be issued by a community for new construction and substantial improvements and for other development necessary for the conduct of a functionally dependent use provided that
   (1) The criteria of paragraphs 7.16(B)(2) (a) though (d) of this section above, are met; and
   (2) The structure or other development is protected by methods that minimize flood damages during the base flood and create no additional threats to public safety.

7.16 WAIVERS

A. **Waivers for Subdivision Requirements.** In accordance with§4418(2)(A) of the Act, where the Development Review Board finds extraordinary and unnecessary hardship may result from strict compliance with these Bylaws and/or where there are special circumstances of a particular Plat, it may waive portions of these Bylaws so that substantial justice may be done and the public interest secured; provided that such waiver will not have the effect of nullifying the intent and purpose of the Chester Town Plan, or the municipal bylaws in effect.

In granting waivers, the Development Review Board may require such conditions as will, in its judgment, secure the objectives of the requirements so waived. Such action shall pertain to that particular subdivision and shall not set a precedent for similar action relative to any other subdivision.

B. Waivers for Zoning Dimensional Standards. As allowed under 24. V.S.A. 4414(8), a waiver of dimensional setbacks (front, rear and side yard requirements) from property lines may be granted by the Development Review Board for any existing building subject to the following provisions. Waiver requests are subject to the requirements and review procedures under Section 4.5 for conditional uses.

1. **Applicability.** Waivers of dimensional setbacks are limited to:

   a. Reduction to any required front, side or rear setback for legally existing primary structures in order to accommodate:
      i. ADA accessibility improvements;
      ii. Life safety improvements;
      iii. Unheated, open-sided additions (e.g. decks, stairways, entryways, etc.);
      iv. Building systems (e.g. air conditioning, generators); or,
      v. Renewable energy structures that could not be reasonably developed without a waiver.

2. **Review Criteria.** The Development Review Board may approve a waiver request upon finding that:

   a. Granting a waiver will not result in an unsafe condition of the lot or to the public.

   b. Incorporates design techniques (restricted height, lack of windows), screening (fencing or plantings) or other remedies to reasonably limit impact or the potential for impact upon the neighbors or public rights-of-way.

c. The waiver requested would not impair sight distances on or maintenance of public or private roads or sidewalks.

d The proposed work or construction does not encroach into the required front, side or rear yard setbacks any more than necessary to accomplish the desired results.

e. The proposed development is compatible in scale and design of structures and the overall existing development pattern of the surrounding area.

f. The waiver resolves a practical difficulty in developing the property and allows reasonable use of the property;

g. In the case of historic properties, the waiver is essential to the preservation and renovation of the historic building or the preservation of the historic pattern of land use of the surrounding area.

3. **Decisions & Conditions**. The Development Review Board shall make its decision on the request for waiver by applying the facts presented both in the application and at the public hearing to the criteria listed herein. In approving a waiver request, the Development Review Board shall determine and may impose conditions to ensure that the waiver is the minimum required to afford relief and represents the least deviation possible from the dimensional requirements. These conditions may include, but need not be limited to, the following:

a. Limiting the size of the structure;

b. Requiring the mitigation of impacts to adjoining properties and/or uses, to public rights-of-way through building design (e.g. limiting window placement), layout, landscaping or screening;

c. Reducing the encroachment into the required front, side or rear yard setbacks;

d. Requiring that the project does not extend beyond an existing nonconforming structure unless needed to accomplish the intended goal;

e. Reducing the waiver requested to ensure that the waiver represents the minimum waiver that will afford relief and will represent the least deviation possible from the zoning bylaw;

f. Controlling the location and number of vehicular access points;

g. Requiring site reclamation in the event the use of the renewable energy structure(s) is discontinued for a period of 180 days. The site shall be restored to its natural condition or returned to the site conditions prior to construction of the facility;

h. Requiring the application to have professional site plans prepared by a surveyor, engineer, architect or landscape architect licensed by the State of Vermont.

4. **Limitations of Waiver Approval**. Any waiver granted under this section shall be limited to the specific property to which it has been granted. A waiver on one property shall not be construed as a general guideline or standard for any other property.

7.17 PUBLIC NOTICE

A. In accordance with the Act [§4464], a warned public hearing shall be required for conditional use review (Section 4.5), appeals of decisions of the administrative officer and variances (Sections 7.12, 7.16) and all subdivision reviews (Section 4.8). Any public notice for a warned public hearing shall be given not less than 15 days prior to the date of the public hearing by all of the following:

1. Publication of the date, place and purpose of the hearing in a newspaper of general circulation in the municipality;
2. Posting of the same information in three (3) or more public places within the municipality, including the posting of a notice within view from the public right-of-way nearest to the property for which the application is being made;
3. Written notification to the applicant and to owners of all properties adjoining the property subject to development, without regard to public rights-of-way, which includes a description of the proposed project, information that clearly informs the recipient where additional information may be obtained, and that participation in the local proceeding is a prerequisite to the right to take any subsequent appeal; and,
4. For hearings on subdivision plats located within 500 feet of a municipal boundary, written notification to the clerk of the adjoining municipality. (See Section 4.8.)

B. No defect in the form or substance of any required public notice under this section shall invalidate the action of the Development Review Board where reasonable efforts have been made to provide adequate posting and notice. However, the action shall be invalid when the defective posting or notice was materially misleading in content. If an action is ruled to be invalid by the Development Review Board or the Environmental Court, the action shall be remanded to the Board to provide new posting and notice, hold a new hearing, and take a new action.

7.18 PUBLIC HEARINGS

A. In accordance with the Act [§4461], all meetings and hearings of the Development Review Board, except for deliberative sessions, shall be open to the public. For the conduct of any hearing, and the taking of any action, a quorum shall be not less than the majority of members of the [Appropriate Municipal Panel(s)]. The Development Review Board, in conjunction with any hearing under this bylaw, may:

1. Examine or caused to be examined any property, maps, books, or records bearing upon the matters concerned in that proceeding;
2. Require the attendance of any person having knowledge in the premises;
3. Take testimony and require proof material for its information; and
4. Administer oaths or take acknowledgement in respect of those matters.

B. In any public hearing there shall be an opportunity for each person wishing to achieve status as an interested person to demonstrate that the criteria set forth under Section 7.13 are met. The Development Review Board shall keep a record of the name, address, and participation of each of these persons.

C. In accordance with the Act [§§4464(b), 4468], the Development Review Board may recess a hearing on any application or appeal pending the submission of additional information, provided that the next hearing date and place is announced at the hearing.

D. On the Record Review (MAPA)

In accordance with the Act [§§4420, 4471], the Town of Chester has adopted the Municipal Administrative Procedures Act or "MAPA" [24 V.S.A., Chapter 36] to be applied by the Development Review Board for purposes of hearing, on the record, applications for: conditional use review (Sections

4.5 and 4.7), preliminary and final subdivision review (Section 4.8), planned unit development review (Section 4.6), waiver requests (Section 7.17), and appeals and variance requests (Sections 7.12 and 7.16). Accordingly:

1. Such hearings shall be considered "contested hearings" as defined under the MAPA, to be conducted in accordance with the requirements of the procedures act.

2. The Development Review Board shall comply with the provisions of 12 V.S.A. §61(a) regarding conflicts of interest.

3. Public notice of hearings shall be provided in accordance with Subsection 7.18.

4. The chair or vice chair shall preside over the hearing; in their absence the Development Review Board shall elect a temporary chair. The presiding officer shall cause the proceeding to be recorded.

5. All testimony of parties and witnesses shall be made under oath or affirmation.

6. The rules of evidence as applied in civil cases in superior court shall be followed. Irrelevant, immaterial or unduly repetitious evidence shall be excluded. When necessary to ascertain facts not reasonably susceptible to proof under those rules, evidence not admissible under those rules may be admitted if it is of a type commonly relied upon by reasonably prudent people in the conduct of their affairs.

7. Requirements regarding ex parte communications shall be followed. No member of the Development Review Board shall communicate on any issue in the proceeding, directly or indirectly, with any party, party's representative, party's counsel, or any interested person in the outcome of the proceeding while the proceeding is pending without additional notice and opportunity for all parties to participate. All ex parte communications received by Development Review Board members, all written responses to such communications, and the identity of the person making the communication shall be entered into the record.

8. Members of the Development Review Board shall not participate in the decision unless they have heard all the testimony and reviewed all the evidence submitted in the hearing. This may include listening to a recording, or reading the transcripts of testimony they have missed, and reviewing all exhibits and other evidence prior to deliberation.

9. All final decisions shall be in writing and shall separately state findings of fact and conclusions of law in accordance with Section 7.20.

10. Transcripts of proceedings shall be made upon the request and payment of reasonable costs of transcription by any party.

7.19 DECISIONS

A. Any action or decision of the Development Review Board shall be taken by the concurrence of a majority of the members of the Development Review Board. In accordance with the Act [§4464(b)], the Development Review Board shall issue a decision within 45 days after the adjournment of the hearing. Failure to issue a decision within the 45-day period shall be deemed approval and shall be effective the 46th day. In addition:

1. All decisions shall be issued in writing and shall separately state findings of fact and conclusions of law. Findings of fact shall explicitly and concisely restate the underlying facts that support the decision, based exclusively on evidence of the record. Conclusions shall be based on the findings of fact. The decision shall also include a statement of the time within which appeals may be taken under Section 7.12. The minutes of a meeting may suffice, provided that the factual basis and conclusions relating to the review standards are provided in accordance with these requirements.
2. In rendering a decision in favor of the applicant, the Development Review Board may attach additional reasonable conditions and safeguards as it deems necessary to implement the purposes of the Act, these regulations, and the municipal plan currently in effect. This may include, as a condition of approval:
   a. the submission of a three-year performance bond, escrow account, or other form or surety acceptable to the Legislative Body, which may be extended for an additional three-year period with the consent of the owner, to assure the completion of a project, adequate stabilization, or protection of public facilities that may be affected by a project; and/or
   b. a requirement that no zoning permit be issued for an approved development until required improvements have been satisfactorily installed in accordance with the conditions of approval.

3. All decisions of the Development Review Board shall be sent by certified mail, within the required 45-day period, to the applicant or the appellant on matters of appeal. Copies of the decision also shall be mailed to every person or body appearing and having been heard at the hearing, and filed with the Zoning Administrator and Clerk as part of the public record of the municipality.

7.20 RECORDING REQUIREMENTS

A. Within 30 days of the issuance of a municipal land use permit or notice of violation, the Administrative Officer shall deliver either the original, a legible copy, or a notice of the permit or violation to the Municipal Clerk for recording in the land records of the municipality generally as provided in 24 V.S.A. §1154(c), and file a copy in the Municipal Office in a location where all municipal land use permits shall be kept, as required under the Act [§4449(c)]. The applicant may be charged for the cost of the recording fees.

B. For development within the Flood Hazard Area Overlay District, the Administrative Officer shall also maintain records in accordance with Section 7.1(B).

ARTICLE 8 – DEFINITIONS

8.1 Terms and Uses
Except where specifically defined herein or in the Act, or unless otherwise clearly required by the context, all words, phrases and terms in this bylaw shall have their usual, customary meanings.
Unless the content clearly indicated to the contrary, words in the singular include the plural and those in the plural include the singular. The word "may" is permissive; the words "shall" and "will" are mandatory.

8.2 Definitions

A ZONE: That portion of the Special Flood Hazard Area (SFHA) subject to a one percent chance of being equaled or exceeded in any given year. In the A Zone the base floodplain is mapped by approximate methods, i.e. BFEs are not determined. This is often called unnumbered A Zone or approximate A Zone.

ACCEPTED AGRICULTURAL PRACTICES (AAPS): Accepted practices for agriculture, including farm structures other than dwellings, as currently defined by the Development Review Boarder of Vermont Department of Agriculture, Food and Markets in accordance with the Act [§4413 (d)]. See the AAP Appendix.

ACCESSORY BUILDING: A detached building or structure customarily incidental and subordinate to the principal building and located on the same lot and not intended for independent living. Examples include garages and storage sheds.

ACCESSORY DWELLING UNIT: An efficiency or one-bedroom apartment, located within or appurtenant to an owner-occupied single-family dwelling, that is clearly subordinate to a single-family dwelling, and has facilities and provisions for independent living, including sleeping, food preparation, and sanitation, provided there is compliance with all the following:

- The property has sufficient wastewater capacity.
- The unit does not exceed 30 percent of the total habitable floor area of the single-family dwelling.
- Applicable setback, coverage, and parking requirements specified in the bylaws are met. 24 V.S.A. § 4412(1)(E).

ACCESSORY USE: A use of land or building or portion thereof customarily incidental and subordinate to the principal use of the land or building and located on the same lot with the principal use. For the purpose of permitted uses listed in Article 2, accessory use includes home occupations, residential care homes and family child care home as defined in this section.

ACT: Title 24, Chapter 117, Vermont Statutes Annotated, The Vermont Municipal and Regional Planning and Development Act.

ADMINISTRATIVE OFFICER: The person appointed by the Selectboard to administer and implement the provisions of these Bylaws.

AFFORDABLE HOUSING: "Affordable housing" means either of the following:

(A) Housing that is owned by its inhabitants whose gross annual household income does not exceed 80 percent of the county median income, or 80 percent of the standard metropolitan statistical area income if the municipality is located in such an area, as defined by the United States Department of Housing and Urban Development, and the total annual cost of the housing,

including principal, interest, taxes, insurance, and condominium association fees is not more than 30 percent of the household's gross annual income.

(B) Housing that is rented by its inhabitants whose gross annual household income does not exceed 80 percent of the county median income, or 80 percent of the standard metropolitan statistical area income if the municipality is located in such an area, as defined by the United States Department of Housing and Urban Development, and the total annual cost of the housing, including rent, utilities, and condominium association fees, is not more than 30 percent of the household's gross annual income.

AFFORDABLE HOUSING DEVELOPMENT: A housing development of which at least 20 percent of the units or a minimum of five units, whichever is greater, are affordable housing units. Affordable units shall be subject to covenants or restrictions that preserve their affordability for a minimum of 15 years or longer as provided in municipal bylaws.

AGRICULTURAL USE: The growing or harvesting of crops; raising of livestock; operation of orchards, including maple sugar orchards; the sale of farm produce on the premises where raised; processing or storage of products raised on the property. See also Accepted Agricultural Practices.

AGRICULTURAL STRUCTURES: In accordance with the Act [§4413(d)], a building for housing livestock, raising horticultural or agronomic plants, or carrying out other practices associated with agricultural or farming practices, as "farming" is defined in T.10. V.S.A. §6001(22). This definition includes such farm structures as barns, silos, fences and manure pits, but specifically excludes a dwelling for human habitation. See also Agriculture, Accepted Agricultural Practices.

AH ZONE: An area of 100-year shallow flooding where depths are between 1 and 3 feet (usually shallow ponding), base flood elevations are shown.

ANIMAL HOSPITAL: A facility that provides a range of animal or veterinary services including medical care and short term boarding that is incidental to animal medical services. This does not include animal shelters or kennels.

ANIMAL KENNEL: A facility in which animals are boarded, groomed, bred or trained for commercial gain. For the purposes of these Bylaws, this definition also includes animal shelters that house stray, homeless, abandoned, injured or unwanted animals.

ANTIQUE SHOP: A shop used for the retail sale of antiques, but does not include furniture stripping or repair.

AO ZONE: An area of 100-year shallow flooding where depths are between 1 and 3 feet (usually sheet flow on sloping terrain), flood depths are shown.

APPLICANT: The owner of land or property proposed to be developed in accordance with these Bylaws, and/or his or her duly authorized representative. Any party with a legal interest in land development may apply in cooperation with the owner of the property.

ARTS & ENTERTAINMENT: A use that includes visual or performing arts centers, art studios or galleries, museums, movie theaters, concert or dance halls, nightclubs, taverns or other similar activities that meet the performance standards and all other requirements of these Bylaws. This definition does not include adult oriented businesses.

AUTHORIZED AGENT OR REPRESENTATIVE: A person or group of persons who have duly authorized in writing filed with the Development Review Board by the Subdivider to act in his or her behalf.

AUTOMOTIVE FUEL/ENERGY STATIONS: Automotive fueling or energy stations including gas stations or other similar uses that meet the performance standards and all other requirements of these Bylaws.

AUTOMOTIVE SALES: Automotive sales include new and/or used car sales businesses, trailer and/or mobile home sales or other similar uses that meet the performance standards and all other requirements of these Bylaws.

AUTOMOTIVE SERVICE: Automotive services include motor vehicle repair service, trailer and/or mobile home service or other similar uses that meet the performance standards and all other requirements of these Bylaws.

BASE FLOOD: Means the flood having a one percent chance of being equaled or exceeded in any given year.

BASE FLOOD ELEVATION (BFE): The height of the base flood, usually in feet, in relation to the National Geodetic Vertical Datum of 1929, the North American Vertical Datum of 1988, or other datum referenced in the Flood Insurance Study report, or average depth of the base flood, usually in feet, above the ground surface.

BASEMENT: Any area of the building having its floor elevation (below ground level) on all sides.

BED AND BREAKFAST: See Tourist Lodging.

BOUNDARY LINE ADJUSTMENT: Moving a property boundary between two (2) or more adjoining parcels that creates no new separate lots or parcels, and has no adverse impact on access, the provision of public services and utilities, or neighboring uses.

BROADCAST FACILITIES: See Wireless Communications Facilities.

BUILDING: A structure used for the shelter or accommodation of persons, animals, goods, personal property or equipment, which has a roof supported by columns or walls. The word "building" includes structures and shall be construed as if followed by the phrase "or part thereof."

BUILDING AND CONSTRUCTION TRADES: Includes, but not limited to, plumbing, electrical, carpentry, painting, masonry, roofing and building

Figure 8.1 – Illustrative of Terms for Buildings, Lots & Yards

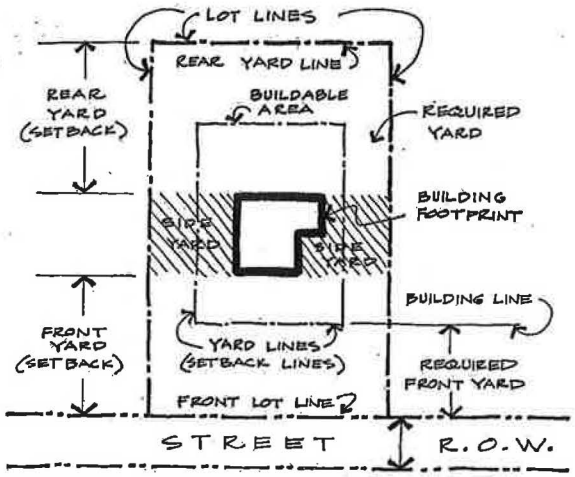

Source: *The Latest Illustrated Book of Development Definitions,* Moskowitz & Lindbloom)

foundations.

BUILDING FOOTPRINT: The area encompassed by a building's outer wall at ground level including all projections in new construction. See Figure 8.1 that is illustrative of this term.

BUILDING HEIGHT: See Height.

BUILDING ORIENTATION: The location on a lot of a building or other structure in relation to roads, rights-of-way, parks, and building or street lines.

BYLAWS: These Town of Chester Unified Development Bylaws.

CAMPGROUND: A parcel of land upon which campsites are located for occupancy by a tent, cabin, lean-to or similar structure as temporary living quarters for recreation, education or vacation purposes. (See 9 V.S.A. § 44709(a).) "Primitive" campgrounds are further characterized as campgrounds which are limited to substantially unimproved camp sites intended for tenting use only.

CHESTER TOWN PLAN: Comprehensive development plan adopted pursuant to Title 24 Vermont Statutes Annotated, Chapter 117, Subchapter 2.

CIVIC OR INSTITUTIONAL USE: A nonprofit, religious or public use, such as a religious building, library, cemetery, public or private school, hospital, or government-owned or -operated structure, or land used for public purpose.

CIVIC RECOGNITION SIGNS: Off-premises medallions to acknowledge beautification projects located on Town property. Signs must not exceed 6" x 18", be approved by the Selectboard, and not be located so as to be hazardous to vehicles or pedestrians.

COMMUNITY WATER SYSTEM: any surface water or groundwater supply system used as a source of drinking water for a public water system as defined under 10 V.S.A. §1671(5).

COMMUNITY SEWAGE DISPOSAL SYSTEM: Any sewage disposal system, other than a municipal sewage disposal system, owned by the same person or persons, that disposes of sewage for domestic commercial, industrial or institutional uses to two (2) or more users or customers.

CONSTRUCTION DRAWINGS: The drawing showing the location, profile grades, size and types of sewers, water mains, roads or other capital improvements, rights of way, easements, and property lines

DEVELOPMENT: The division of a parcel into two or more parcels, the construction, reconstruction, conversion, structural alteration, relocation or enlargement of any building or other structure, or of any mining, excavation or landfill, and any change in the use of any building or other structure, or land, or extensions of use of land [the Act §4303 (10)]. For the purposes of the Flood Damage Prevention provisions, *development* means any man-made change to improved or unimproved real estate, including but not limited to buildings or other structures, mining, dredging, filling, grading, paving, excavation or drilling operations or storage of equipment or materials.

DE MINIMIS IMPACT: Small or minimal impacts. For the purposes of telecommunication facilities, de minimis impact includes collocation of an array on an existing permitted tower, upgrades to existing

permitted equipment and similar projects; but it does not include access road expansions, higher fences, new towers, extending the height of existing towers and similar projects.

DEVELOPMENT ENVELOPE: A specific area delineated on a lot within which all structures are to be located, and outside of which no structures are to be located.

DRIVEWAY: A minor, private travel way serving no more than one (1) parcel, which provides vehicular access from an adjoining road to a parking space, garage or other structure. See also Road.

DWELLING UNIT: A space consisting of one or more rooms designed, occupied or intended for occupancy as a separate living quarters, with cooking, sleeping, and sanitary facilities provided within that space for the exclusive use of one or more persons maintaining a household. See also Accessory Dwelling Unit, Single-Family Dwelling, Two-Family Dwelling and Multiple-Family Dwelling.

DWELLING, SINGLE-FAMILY: A building or part thereof used as living quarters for one family and containing independent cooking, sanitary and sleeping facilities. It shall include prefabrication and modular units, but shall not include motel, hotel, boarding house, or tourist home.

DWELLING, TWO-FAMILY DWELLING: A building on a single lot containing two dwelling units, each of which is totally separated from the other by an unpierced wall extending from ground to roof or an unpierced ceiling and floor extending from exterior wall to exterior wall, except for a common stairwell exterior to both dwelling units.

DWELLING, MULTIPLE FAMILY: Building used as living quarters by three or more families living independently of each other.

EASEMENT: The grant of one or more of the property rights by the property owner to and/or for use by the public, a corporation or another person or entity. This may include conservation, drainage, utility, scenic or viewshed easements.

EXTENT OF NONCONFORMITY: The extent to which a structure encroaches upon, or otherwise violates, one or more dimensional standard of these Bylaws. The extension of a structure which results in an additional encroachment of the non-complying feature/element, including the expansion of the volume or area of a structure within a building setback, would increase the degree of nonconformity.

EXTRACTION OPERATIONS: A use involving the on-site removal of surface and subsurface materials, including soil, sand, gravel, stone, rock or organic substances other than vegetation, from land or water. Customary extraction operations include sand and gravel pits, rock quarries, and accessory operations such as the crushing, screening, and temporary storage of materials excavated on-site (see Section 3.9).

FAMILY CHILD CARE FACILITY: A facility where the owner or operator is to be licensed or registered by the state for child care and which provides care on a regular basis for more than six full-time and four part-time children.

FAMILY CHILD CARE HOME: A home where the owner or operator is to be licensed or registered by the state for child care, and which provides for care on a regular basis in the caregiver's own residence for not more than ten children at any one time. Of this number, up to six children may be provided care on a full-time basis and the remainder on a part-time basis. Care of a child on a part-time basis shall mean care of a school-age child for not more than four hours a day. These limits shall not include children who reside in the residence of the caregiver; except:

(A) these part-time school-age children may be cared for on a full-day basis during school closing days, snow days and vacation days which occur during the school year; and
(B) during the school summer vacation, up to 12 children may be cared for provided that at least six of these children are school age and a second staff person is present and on duty when the number of children in attendance exceeds six. These limits shall not include children who are required by law to attend school (age 7 and older) and who reside in the residence of the caregiver. 33 V.S.A. § 4902((3).

FINAL SUBDIVISION PLAT: The final drawings on which the Subdivider's plan of subdivision is presented to the Development Review Board for approval and which, if approved, may be filed for record with the Town Clerk within 90 days of final approval.

FLOOD: means:
(a) A general and temporary condition of partial or complete inundation of normally dry land areas from: the overflow of inland or tidal waters; the unusual and rapid accumulation or runoff of surface waters from any source; and mudslides which are proximately caused by flooding and are akin to a river of liquid and flowing mud on the surfaces of normally dry land areas, as when earth is carried by a current of water and deposited along the path of the current.
(b) The collapse or subsidence of land along the shore of a lake or other body of water as a result of erosion or undermining caused by waves or currents of water exceeding anticipated cyclical levels or suddenly caused by an unusually high water level in a natural body of water, accompanied by a severe storm, or by an unanticipated force of nature, such as flash flood or abnormal tidal surge, or by some similarly unusual and unforeseeable event which results in flooding.

FLOOD HAZARD AREA: "Flood hazard area" for purposes of §4424 of this title means the land subject to flooding from the base flood. "Base flood" means the flood having a one percent chance of being equaled or exceeded in any given year. Further, with respect to flood and other hazard area regulation pursuant to this chapter, the following terms shall have the following meanings:
(A) "Flood proofing" means any combination of structural and nonstructural additions, changes, or adjustments to properties and structures that substantially reduce or eliminate flood damage to any combination of real estate, improved real property, water or sanitary facilities, structures, and the contents of structures.
(B) "Floodway" means the channel of a river or other watercourse and the adjacent land area that must be reserved in order to discharge the base flood without accumulatively increasing the water surface elevation more than one foot.
(C) "Hazard area" means land subject to landslides, soil erosion, earthquakes, water supply contamination, or other natural or human-made hazards as identified within a "local mitigation plan" in conformance with and approved pursuant to the provisions of 44 C.F.R. §201.6.
(D) "New construction" means construction of structures or filling commenced on or after the effective date of the adoption of a community's flood hazard bylaws.
(E) "Substantial improvement" means any repair, reconstruction, or improvement of a structure, the cost of which equals or exceeds 50 percent of the market value of the structure either before the improvement or repair is started or, if the structure has been damaged and is being restored, before the damage occurred. However, the term does not include either of the following:
(i) Any project or improvement of a structure to comply with existing state or local health, sanitary, or safety code specifications that are solely necessary to assure safe living conditions.
(ii) Any alteration of a structure listed on the National Register of Historic Places or a state inventory of historic places.

FLOOD INSURANCE RATE MAP (FIRM): An official map of a community, on which the Federal Insurance Administrator has delineated both the special hazard areas and the risk premium zones applicable to the community.

FLOOD INSURANCE STUDY (GENERIC): An examination, evaluation and determination of flood hazards and, if appropriate, corresponding water surface elevations or an examination, evaluation and determination of mudslide (i.e., mudflow) and /or flood related erosion hazards.

FLOOD INSURANCE STUDY (FIS): The official hydraulic & hydrologic report provided by FEMA. The report contains flood profiles, as well as the FIRM, FHBM (where applicable) and the water surface elevation of the base flood.

FLOODPLAIN OR FLOOD-PRONE AREA: Any land area susceptible to being inundated by water from any source (see definition of "flood").

FLOOD PROOFING: Any combination of structural and non-structural additions, changes, or adjustments to structures which reduce or eliminate flood damage to real estate or improved real property, water and sanitary facilities, structures and their contents.

FLOODWAY: The channel of a river or other watercourse and the adjacent land areas that must be reserved in order to discharge the base flood without cumulatively increasing the water surface elevation more than one foot at any point.

FLOODWAY FRINGE: That area of the floodplain on either side of the regulatory floodway where encroachment may be permitted without additional hydraulic and/or hydrologic analysis.

FORESTRY: The use and management of woodlands for purposes of timber production and harvesting for commercial, wildlife and/or conservation purposes. This definition specifically excludes permanent sawmills, lumber yards and other similar facilities used for the processing and/or manufacturing of wood and wood products; but may include, as accessory uses, portable sawmills and equipment used on-site in association with timber harvesting operations.

FRONTAGE: That side of a lot abutting on a street(s); the front lot line. (See Minimum Lot Frontage as it pertains to zoning district dimensional standards.)

FRONTAGE, MINIMUM LOT: The length of the front lot line measured at the street, road or right-of-way line.

FRONT-YARD SETBACKS: The front-yard setback shall be measured from the shoulder of the road.

GROUP HOME: A state licensed residential care home serving persons who have a handicap or disability as defined in 9 V.S.A. §4501. In accordance with the Act [§4412(1)(G)], a group home, as defined, serving not more than 8 persons, shall be considered by right to constitute a permitted single family residential use of property except that no such home shall be considered if it is located within 1,000 feet of another existing or permitted such home.

HEALTH CARE FACILITY: A facility, whether public or private, principally engaged in providing health care services and the treatment of mental or physical conditions, such as a medical clinic, doctor's office or physical rehabilitation centers.

HEAVY CONSTRUCTION TRADES: Includes, but not limited to, earth moving, excavation, trucking and paving.

HEIGHT (BUILDING HEIGHT): The vertical distance of a structure measured from the average elevation of the finished grade surrounding the structure to the highest point of the roof, not including the chimney, cupola and other non-habitable roof appurtenances.

HIGHEST ADJACENT GRADE: The highest natural elevation of the ground surface, prior to construction, next to the proposed walls of a building.

HISTORIC STRUCTURE: Any structure that is:

(a) Listed individually in the National Register of Historic Places (a listing maintained by the Department of the Interior) or preliminarily determined by the Secretary of the Interior as meeting the requirements for individual listing on the National Register;

(b) Certified or preliminarily determined by the Secretary of the Interior as contributing to the historical significance of a registered historic district or a district preliminarily determined by the Secretary to qualify as a registered historic district;

(c) Individually listed on a state inventory of historic places in states with historic preservation programs which have been approved by the Secretary of the Interior; or

(d) Individually listed on a local inventory of historic places in communities with historic preservation programs that have been certified either:

(i) By an approved state program as determined by the Secretary of the Interior or

(ii) Directly by the Secretary of the Interior in states without approved programs.

HOME BUSINESS: Any small business carried on by family members in a minor portion of the dwelling or in an accessory building, with no more than four (4) on-premise employees who are not part of the family in accordance with Section 3.12 of these Bylaws.

HOME OCCUPATION: Any use conducted entirely within a dwelling or accessory building and carried on by the occupants thereof, which use is clearly incidental and secondary to the use of the dwelling for dwelling purposes, does not change the character thereof, and does not have an undue adverse effect upon the character of the residential area in which the dwelling is located.

HOTEL: See Tourist Lodging.

IMPERVIOUS SURFACE: A surface that has been compacted or covered with a layer of material that is highly resistant to infiltration by water, including building roofs, hardscapes (e.g. brick patio), sidewalks, driveways, roads and parking lots. Both paved and gravel roads and driveways constitute impervious surfaces. See Figure 8.2 which is illustrative of this term.

Figure 8.2 Impervious Surface

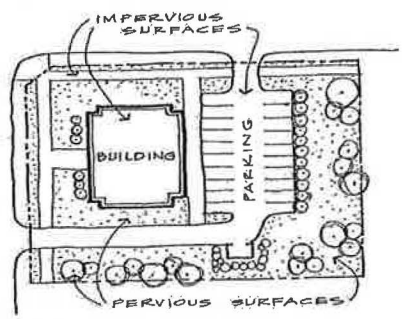

INDUSTRIAL FACILITY: A site comprised of one or more buildings dedicated to industrial use.

INDUSTRIAL USE: Those fields of economic activity that include the transformation of raw materials, manufacturing, processing, transportation terminals and wholesale trade, but does not include extraction operations as defined in these Bylaws.

INN: See Tourist Lodging.

LAND DEVELOPMENT: See Development.

LEASE: Lease shall not include land leased by any person for agricultural purposes.

LEGISLATIVE BODY: The Selectboard in the case of the Town of Chester.

LIFE SAFETY IMPROVEMENTS: Improvements to buildings required to minimize danger to life from fire, smoke, fumes or similar hazard. Examples of life safety improvements include, but are not limited to, stairways, fire escapes and elevators.
LOT: A lot or parcel of land the boundaries of which are separately described in a recorded deed or plat. State or municipal highway and railroad rights-of-way or surface waters with a drainage area greater than 10 square miles constitute a lot boundary.

LOT COVERAGE: That part of the lot that is covered by the footprint of the building area(s).

LOT LINE ADJUSTMENT: See Boundary Line Adjustment

LOWEST FLOOR: The lowest floor of the lowest enclosed area, including basement. An unfinished or flood resistant enclosure, usable solely for parking of vehicles, building access or storage in an area other than a basement area is not considered a building's lowest floor; *Provided*, that such enclosure is not built so as to render the structure in violation of the applicable non-elevation design requirements of 44 CFR 60.3.

MANUFACTURING: Any process whereby the nature, size or shape of articles or raw materials are changed, or where articles are assembled and packaged. (See Industrial Use.)

MARKET VALUE: The building value, excluding the land (as agreed between a willing buyer and seller), as established by what the local real estate market will bear. Market value can be established by independent certified appraisal, replacement cost depreciated by age of building (i.e. Actual Cash Value) or adjusted assessed values.

MASTER PLAN: A comprehensive, long-range plan intended to guide the growth and development of a parcel or tract of land, which may be required by the Development Review Board in accordance with Section 4.8(A)(5).

MIXED USES: The development of mixed-use buildings with a variety of complimentary and integrated uses, such as, but not limited to, residential, retail, restaurant, professional office and personal services, in a compact urban form. Mixed-use buildings generally include retail, personal service, restaurant and similar uses located on the first-floor, with residential or professional office uses on the second or third floors above.

MOBILE HOME: A structure or type of manufactured home that is built on a permanent chassis and is designed to be used as a dwelling with or without a permanent foundation, includes plumbing, heating, cooling, and electrical systems, and is:

- Transportable in one or more sections; and
- At least eight feet wide or 40 feet long or when erected has at least 320 square feet or if the structure was constructed prior to June 15, 1976, at least eight feet wide or 32 feet long; or

- Any structure that meets all the requirements of this subdivision except for size and for which the manufacturer voluntarily files a certification required by the U.S. Department of Housing and Urban Development and complies with the standards established under Title 42 of the U.S. Code.

MOBILE HOME PARK: Any parcel of land under single or common ownership or control which contains, or is designed, laid out or adapted to accommodate, more than two mobile homes. Nothing herein shall be construed to apply to premises used solely for storage or display of mobile homes. Mobile Home Park does not mean any parcel of land under the ownership of an agricultural employer who may provide up to four mobile homes used by full-time workers or employees of the agricultural employer as a benefit or condition of employment or any parcel of land used solely on a seasonal basis for vacation or recreational mobile homes.

MODULAR OR PREFABRICATED HOUSING: A dwelling unit constructed on-site and composed of components substantially assembled in a manufacturing plant and transported to the building site for final assembly on a permanent foundation.

MUNICIPAL LAND USE PERMIT: As defined in the Act [§4303(11)] to include, as issued by the municipality:

(1) Final subdivision, zoning, site plan, flood or building permits or approvals relating to subdivision and land development;
(2) Sewage system permits;
(3) Final official minutes of meetings which relate to permits or approvals, which serve as the sole evidence of such permits or approvals;
(4) Certificates of occupancy, compliance or similar certificates; and
(5) Any amendments to the previously listed permits, approvals and/or certificates.

MUNICIPAL SEWAGE DISPOSAL SYSTEM: Any sewage disposal system owned and operated by the municipality that disposes of sewage for domestic, commercial, industrial, or institutional uses.

MUNICIPAL WATER SYSTEM: Any water system owned and operated by the municipality that supplies water by pipe connection to domestic, commercial, industrial, or institutional uses.

NEW CONSTRUCTION: Structures for which the "start of construction" commenced on or after the effective date of an initial FIRM or after December 31, 1974, whichever is later, and includes any subsequent improvements to such structures. For floodplain management purposes, *new construction* means structures for which the *start of construction* commenced on or after the effective date of the floodplain management regulation adopted by a community and includes any subsequent improvements to such structures.

NEW MANUFACTURED HOME PARK OR SUBDIVISION: A manufactured home park or subdivision for which the construction of facilities for servicing the lots on which the manufactured homes are to be affixed (including at a minimum, the installation of utilities, the construction of streets, and either final site grading or the pouring of concrete pads) is completed on or after the effective date of the floodplain management regulations adopted by a community.

NONCONFORMING: A nonconforming use, structure, lot, or parcel. Nonconformity, noncompliance and any variations of those words are used interchangeably and shall have the same meaning.

NONCONFORMING LOTS OR PARCELS: Lots or parcels that do not conform to the present bylaws covering dimensional requirements but were in conformance with all applicable laws, ordinances, and

regulations prior to the enactment of the present bylaws, including a lot or parcel improperly authorized as a result of error by the administrative officer.

NONCONFORMING STRUCTURE: A structure or part of a structure that does not conform to the present bylaws but was in conformance with all applicable laws, ordinances, and regulations prior to the enactment of the present bylaws, including a structure improperly authorized as a result of error by the administrative officer.

NONCONFORMING USE: Use of land that does not conform to the present bylaws but did conform to all applicable laws, ordinances, and regulations prior to the enactment of the present bylaws, including a use improperly authorized as a result of error by the administrative officer.

NURSERY: The growing, cultivation, storage and sale of garden plants, flowers, trees and shrubs as well as the sale of garden tools and supplies.

OFFICIAL SUBMITTAL DATE: The day when a complete application, including the application form, required fee and all other required information, is received by the Administrative Officer.

PARCEL: See Lot.

PERSON: An individual, a corporation, a partnership, an association, and any other incorporated or unincorporated organization or group.

PERSONAL SERVICE: Business uses providing services of a personal nature, such as barber shop, beauty parlor, shoe repair, laundry, laundromat, dry cleaner, photographic studio and other similar services.

PLANNED UNIT DEVELOPMENT (PUD): One or more lots, tracts, or parcels of land to be developed as a single entity, the plan for which may propose any authorized combination of density or intensity transfers or increases, as well as the mixing of land uses. This plan, as authorized, may deviate from bylaw requirements that are otherwise applicable to the zoning district in which it is located with respect to lot size, bulk, or type of dwelling or building, use, density, intensity, lot coverage, parking, required common open space, or other standards in accordance with Section 4.6 [the Act §4303(19)].

PLAT: A map or representation on paper of a piece of land subdivided into lots drawn to scale.

PRE-EXISTING: A use or structure that was legally in existence as of the effective date of these Bylaws.

PRELIMINARY PLAT: The preliminary drawings indicating the proposed layout of the subdivision to be submitted to the Development Review Board for its consideration.

PRINCIPAL STRUCTURE: A building or structure within which the main or primary use of the lot on which the building is located and conducted.

PROFESSIONAL OFFICE: A room or group of rooms used for conducting the affairs of business, profession, service or industry, and generally furnished with desks, tables, files and communication equipment.

PUBLIC INVESTMENT: Public investment means existing or planned facilities to include, but not limited to, highways, street lighting, sidewalks, or ports, waste disposal facilities, water supply, storage and distribution, waste water disposal systems, storm water disposal, schools, emergency medical service,

fire service, police services, highway maintenance, municipal office and maintenance facilities, parks, municipal forest, and recreation facilities.

RECREATION: A facility or place designed and equipped for the conduct of sports and leisure-time activities, including, but not limited to, a park, playground, athletic fields/track, picnic areas, hiking trails, health club and other recreational facilities or uses. For the purposes of allowable uses listed in Article 2, recreational uses may include commercial, public or private recreation facilities, but are subject to performance standards and all other requirements of these Bylaws.

RESIDENTIAL CARE HOME: A place, however named, excluding a licensed foster home, which provides, for profit or otherwise, room, board and personal care to three or more residents unrelated to the home operator.

RECREATIONAL VEHICLE: A vehicle which is: (a) Built on a single chassis; (b) 400 square feet or less when measured at the largest horizontal projection; (c) Designed to be self-propelled or permanently towable by a light duty truck; and (d) Designed primarily not for use as a permanent dwelling but as a temporary living quarters for recreational, camping, travel, or seasonal use.

RESTAURANT: Licensed premises where food and drink are prepared, sold, served and consumed primarily within the principal building. A restaurant may have a small bar or limited forms of musical entertainment to accompany the dining experience; however, restaurants that provide dancing and stage shows or that operate primarily as a drinking establishment are considered nightclubs or taverns under the Arts & Entertainment use category in Article 2.

RESUBDIVISION: A change of a recorded subdivision plat if such change affects any road layout on such plat, or area reserved thereon for public use, or any change of a lot line, or any change which affects any or plat legally filed or recorded.

RETAIL STORE: Premises where goods, services, or merchandise are offered for retail sale or rent to the general public for personal, business, or household consumption and services incidental to the sale of such goods are provided. This definition specifically excludes automotive sales, fuel and service defined herein.

RIGHT-OF-WAY: A strip of land permanently dedicated or otherwise legally established for a road or other transportation facility, usually affording the principal means of access to abutting property and/or for public travel.

ROADS: Any street, highway, avenue, land, or right-of-way commonly used by the public for vehicular traffic, regardless of its length that provides access to two or more lots, shall be deemed a road. An access driveway to a single lot shall not be considered a road.

SETBACK, FRONT YARD: The horizontal distance between the building area and the front lot line, as measured from the road shoulder.

SETBACK, SIDE YARD & REAR YARD: The horizontal distance between the building area and any lot line.

SCREENING: The use of planted vegetation, fencing, walls, natural topography or earthen berms to visually shield or obscure a structure or use from neighboring structures, properties, rights-of-way and/or designated public vantage points.

SIGN: Any structure, wall display, device or representation which is designed or used to advertise or call attention to or directs a person to a business, association, profession, commodity product, institution, service, entertainment, person, place or thing, or activity of any kind, and is visible or audible from a highway or other public right-of-way.

SIGNS, FREESTANDING: Fixed signs which are supported by the ground only. A sign supported by one or more poles, columns or supports placed in or on the ground and not attached to any building or structure.

SIGNS, PORTABLE: Signs mounted on wheels and designed to be towed from place to place, or signs not permanently fastened down and intended to be placed during business hours.

SIGNS, PROJECTING: Signs which project from the surface of the building on which they are mounted. Signs mounted on a roof shall be considered to be projecting signs.

SIGNS, WALL: Signs which are mounted on, affixed to, or built into the exterior material of a building and run parallel to the building, and which shows only one face.

SILVICULTURE: See Forestry.

SLOPE: The inclination of a surface, usually expressed in percent or degrees. Slope, or gradient, is measured as the increase in vertical distance ("rise") over horizontal distance ("run"): percent slope = rise ÷ run x 100. For example, if the land climbs (rises) 25 feet over a distance (run) of 100 feet, the slope is 25%. See Figure 8.3.

Figure 8.3 Measuring Slope

SOURCE PROTECTION AREA: The surface and subsurface area surrounding a water well or well field supplying a public community water system through which contaminants are likely to move toward and reach such water well or well field. Delineation of the source protection area is required by the Vermont Department of Environmental Conservation Water Supply Division for all new public community water systems. See Aquifer Protection Overlay District in Article 2.

SPECIAL FLOOD HAZARD AREA (SFHA): The land in the floodplain within a community subject to a 1 percent or greater chance of flooding in any given year. The area may be designated a Zone A on the Flood Hazard Boundary Map (FHBM). After detailed ratemaking has been completed in preparation for publication of the Flood Insurance Rate Map (FIRM), Zone A usually is refined into Zones A, AO, AH, A1-30, AE, A99, AR, AR/AI-30, AR/AE, AR/AO, AR/AH, AR/A, VO or V1-30, VE, or V. For purposes of these Bylaws, the term "special flood hazard area" is synonymous in meaning with the phrase "area of special flood hazard".

START OF CONSTRUCTION: For the purposes of the Flood Damage Prevention Overlay District, this term includes substantial improvement, and means the date the building permit was issued, provided the actual start of construction, repair, reconstruction, rehabilitation, addition placement, or other improvement was within 180 days of the permit date. The actual start means either the first placement of permanent construction of a structure on a site, such as the pouring of slab or footings, the installation of piles, the construction of columns, or any work beyond the stage of excavation; or the placement of a manufactured home on a foundation. Permanent construction does not include land preparation, such as clearing, grading and filling; nor does it include the installation of streets and/or walkways; nor does it include excavation for a basement, footing, piers, or foundations or the erection of temporary forms; nor does it include the installation on the property of accessory buildings, such as garages or sheds not

occupied as dwelling units or not part of the main structure. For a substantial improvement, the actual start of construction means the first alteration of any wall, ceiling, floor, or other structural part of a building, regardless whether that alteration affects the external dimensions of the building.

STREAM: Any surface water course in the Town of Chester as depicted by the Zoning District Map (or the most recent edition of the natural resources map in the *Chester Town Plan)* or USGS map.

STREET LINE: From the outer edge of the paved surface, or the outer edge of the traveled portion of a dirt road.

STORMWATER MANAGEMENT: The collecting, conveyance, channeling, holding, retaining, detaining, infiltrating, diverting, treating or filtering of surface water and/or runoff, together with applicable non-structural management techniques.

STRUCTURE: An assembly of materials for occupancy or use including, but not limited to, a building, mobile home or trailer, sign, accessory buildings (including hoop houses), and any other structure with a roof. For floodplain management purposes, a structure is any walled and roofed building, including a gas or liquid storage tank, that is principally above ground, as well as a manufactured home. *Structure*, for flood insurance purposes, means:

(a) A building with two or more outside rigid walls and a fully secured roof, that is affixed to a permanent site;

(b) A manufactured home ("a manufactured home," also known as a mobile home, is a structure: built on a permanent chassis, transported to its site in one or more sections, and affixed to a permanent foundation); or

(c) A travel trailer without wheels, built on a chassis and affixed to a permanent foundation, that is regulated under the community's floodplain management and building ordinances or laws.

For the latter purpose, "structure" does not mean a recreational vehicle or a park trailer or other similar vehicle, except as described in (c) of this definition, or a gas or liquid storage tank.

SUBDIVISION: The division of a parcel of land into two (2) or more lots regardless of size, when such action is taken for the purpose of sale, lease, gift, or land development. Construction of a second primary dwelling on a lot shall be deemed a division of the parcel, and a subdivision permit is required. An exchange of small parcels between adjoining property owners to adjust boundaries shall not be considered a subdivision. The term, Subdivision, includes resubdivision. Any Town road constitutes a subdivision.

SUBDIVISION, MAJOR: Any residential subdivision containing five (5) or more total lots, all lots created from a single parcel within the past five (5) years or as otherwise determined by the Development Review Board.

SUBDIVISION, MINOR: Any subdivision containing four (4) or fewer total lots, including amendments to an approved subdivision plan that will not substantially change the nature of any previous subdivision or conditions of approval.

SUBSTANTIAL DAMAGE: Damage of any origin sustained by a structure whereby the cost of restoring the structure to it's before damaged conditions would equal or exceed 50 percent of the market value of the structure before the damage occurred.

SUBSTANTIAL IMPROVEMENT: Any reconstruction, rehabilitation, addition, or other improvement of a structure, the cost of which equals or exceeds 50 percent of the market value of the structure before the "start of construction" of the improvement. This term includes structures which have incurred

"substantial damage", regardless of the actual repair work performed. The term does not, however, include either:

(a) Any project for improvement of a structure to correct existing violations of state or local health, sanitary, or safety code specification which have been identified by the local code enforcement official and which are the minimum necessary to assure safe living conditions; or

(b) Any alteration of a "historic structure" provided that the alteration will not preclude the structure's continued designation as a "historic structure".

For the purposes of determining "substantial improvement" value and exceptions in (a) only and no other purpose, the Administrative Officer is "the local code enforcement official."

SUBSTANTIALLY COMPLETED: The completion of a permitted building or structure to the extent that it conforms to all conditions of approval.

TOURIST LODGING: Overnight accommodations provided to transients for compensation, including bed & breakfasts, boardinghouses, inns, hotels and other overnight accommodations.

TOWN CONSULTANT ENGINEER: Town Manager or other person duly designated to perform this function.

TOWN HIGHWAY, CLASS 1: Highways designated by the Highway Board which are part of a state highway route and which carry a state highway route number.

TOWN HIGHWAY, CLASS 2: Highways designated by the Legislative Body of the municipality with the approval of the Highway Board for securing trunk lines of improved highways from town to town and to places which by their nature have more than normal amounts of traffic.

TOWN HIGHWAY, CLASS 3: All other travelled town highways, other than Class 1 or Class 2, designated by the Legislative Body of the municipality, after conference with a representative of the Highway Board.

TOWN HIGHWAY, CLASS 4: All other town highways, including trails and pent roads, other than Class 1, 2, or 3 highways, designated by the Legislative Body of the municipality.

USE: The purpose for which a building, structure or parcel of land is designed, intended, occupied or utilized.

USE, CONDITIONAL: Certain specific uses as listed in Article2 for which a Conditional Use Permit is required.

USE, PERMITTED: Uses specifically allowed in the district under Article 2, excluding illegal uses and non-conforming uses.

VARIANCE: Permission to depart from the literal requirements of these Bylaws provided all criteria are met under Section 7.16 and as set forth in the Act [§4469].

VIOLATION: Any land development that is not in full compliance with these Bylaws. For the purposes of floodplain management, a structure or other development without the elevation certificate, other certifications, or other evidence of compliance required in 44 CFR 60.3 is presumed to be in violation until such time as that documentation is provided.

WAIVER: A determination made by the Development Review Board to modify either:

1. Zoning dimensional standards in accordance with Section 7.17(B) [the Act §4414(8)]; or,
2. Subdivision any or all subdivision requirements in accordance with Section 7.17(A) [the Act §4418(2)(A)].

WIRELESS COMMUNICATIONS FACILITY: A tower, pole, antenna, guy wire, or related features or equipment intended for use in connection with transmission or receipt of radio or television signals or any other electromagnetic spectrum-based transmission/reception and the construction or improvement of a road, trail, building or structure incidental to a communications facility. Wireless Communication Facilities include Wireless Telecommunication Facilities. A speculative wireless telecommunications facility, that is, one built on speculation that the builder and operator will be able to lease it to a service provider, is considered a wireless communications facility and does not come under the Telecommunications Act of 1996. Applications for such facilities, until a service provider is named and joins in the application, are subject to the review and regulations as a wireless communications facility and not as a wireless telecommunications facility.

YARD: Space on a lot not occupied with a building or structure. Porches, whether enclosed or unenclosed, shall be considered as part of the main building and shall not project into a required yard.

Date of Adoption: Month ___, 2012

Effective Date: Month ___, 2012

The Selectboard
s/John DeBenedetti
s/Derek Suursoo
s/Arunas Jonynas
s/William Lindsey
s/Thomas Bock

s/Deborah Aldrich
Town Clerk

Received for Record: Month____, 2012 _____ a.m. / p.m.

Town of Chester
Proposed Zoning Districts - Overlay Districts

DRAFT 04/09/2014

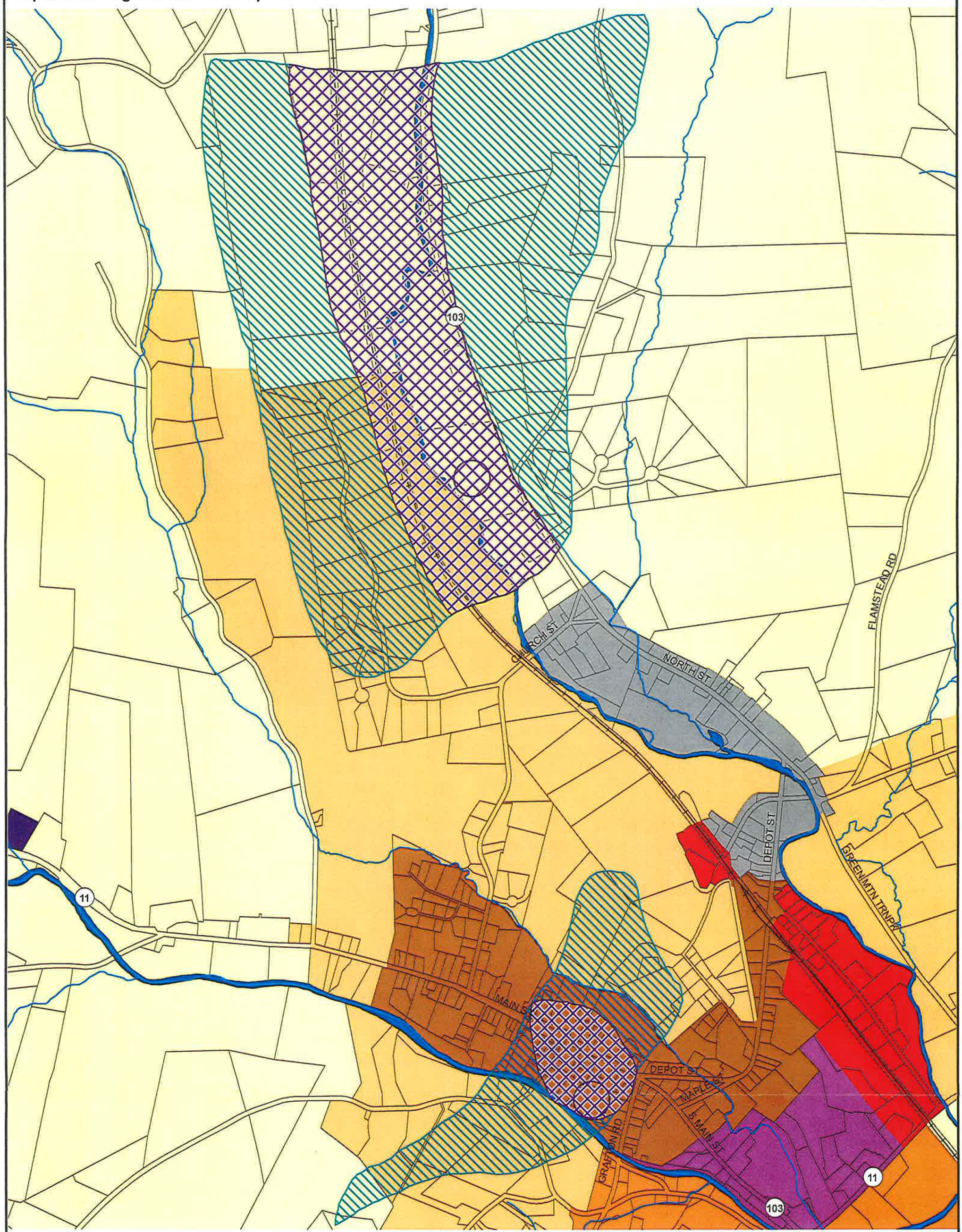

Zoning

- Stone Village
- Village Center
- Residential (20,000 sq ft)
- Residential (40,000 sq ft)
- Residential (3 acres)
- Residential Commercial
- Adaptive (3 acres)
- Commercial Industrial
- Conservation Residential
- Forest

Overlay Districts

- Primary Aquifer Protection Area (APO)
- Secondary Aquifer Protection Area (APO)

- 2010 Parcel
- Water (in 2010 Parcels)
- River/Stream
- Railroad

Miles 0 0.2 0.4

N

Data sources: Parcels (2010), Road names (VTrans/VCGI 2011), Railroad (VTrans/ VCGI 2003), Streams (VHD/VCGI 2008)

VT State Plane. Meters, NAD 83

For planning purposes only.
Not for regulatory interpretation.

Map drawn April 9, 2014

SWCRPC
SOUTHERN WINDSOR COUNTY REGIONAL PLANNING COMMISSION
P.O. Box 320, Ascutney, VT 05030
802-674-9201 www.swcrpc.org

Town of Chester

Proposed Zoning Districts - Village Inset

DRAFT 04/09/2014

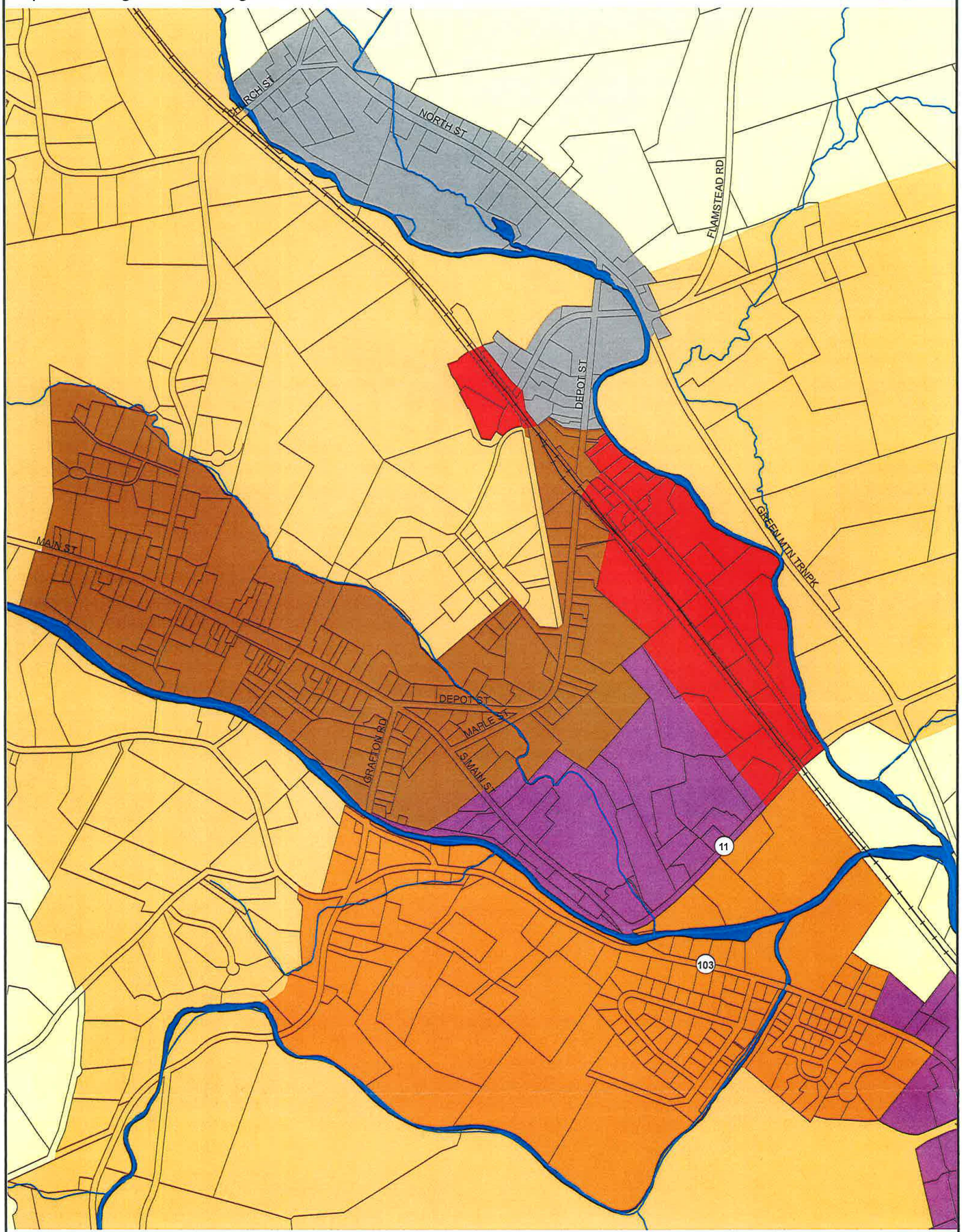

Zoning

- Stone Village
- Village Center
- Residential (20,000 sq ft)
- Residential (40,000 sq ft)
- Residential (3 acres)
- Residential Commercial
- Adaptive (3 acres)
- Commercial Industrial
- Conservation Residential
- Forest

- 2010 Parcel
- Water (in 2010 Parcels)
- River/Stream
- Railroad

Miles 0 0.125 0.25

N

Data sources: Parcels (2010), Road names (VTrans/VCGI 2011), Railroad (VTrans/ VCGI 2003), Streams (VHD/VCGI 2008)

VT State Plane. Meters, NAD 83

For planning purposes only.
Not for regulatory interpretation.

Map drawn April 9, 2014

SWCRPC
SOUTHERN WINDSOR COUNTY
REGIONAL PLANNING COMMISSION
P.O. Box 320, Ascutney, VT 05030
802-674-9201 www.swcrpc.org

Town of Chester
Proposed Zoning Districts

DRAFT 04/09/2014

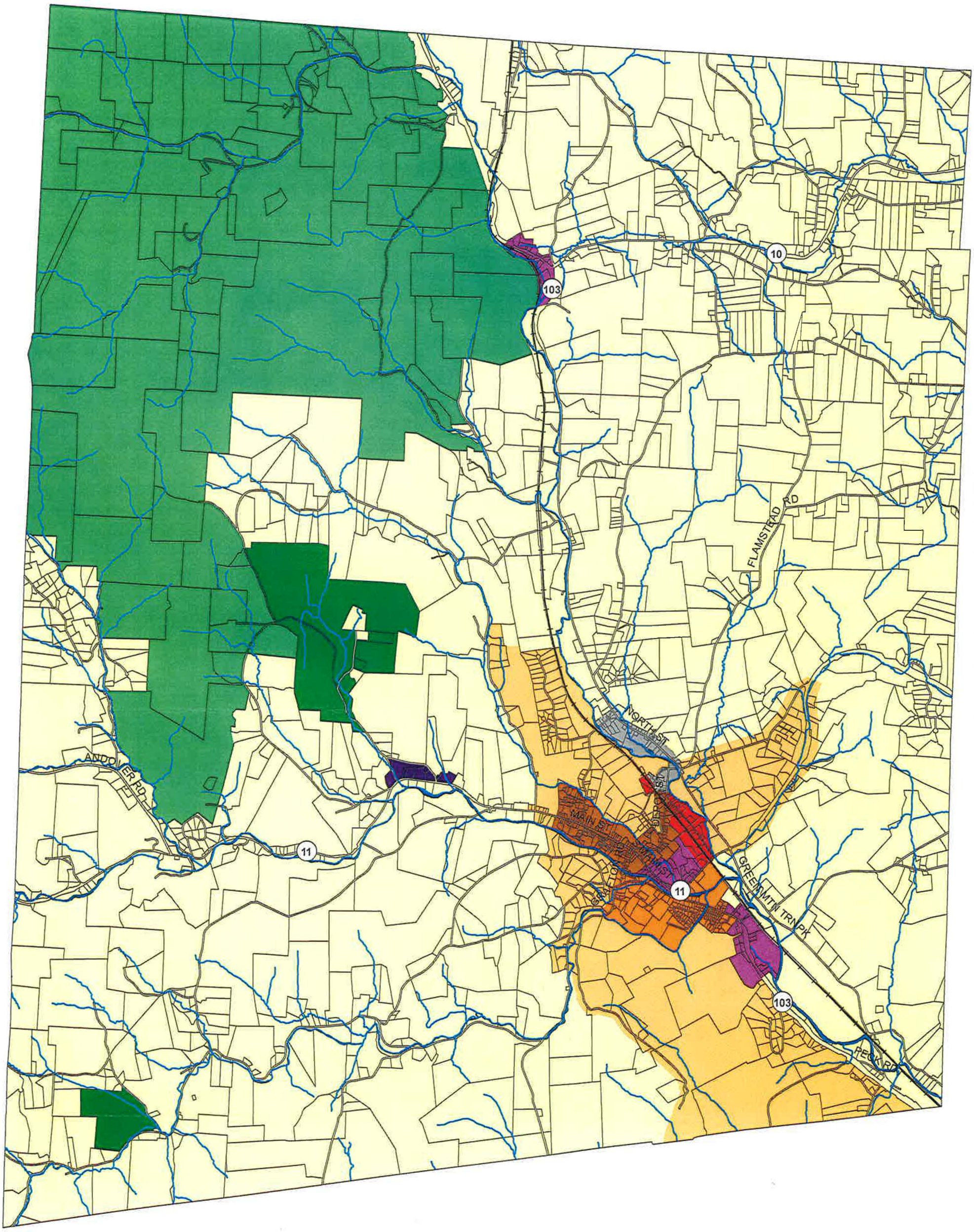

Zoning

- Stone Village
- Village Center
- Residential (20,000 sq ft)
- Residential (40,000 sq ft)
- Residential (3 acres)
- Residential Commercial
- Adaptive (3 acres)
- Commercial Industrial
- Conservation Residential
- Forest

- 2010 Parcel
- Water (in 2010 Parcels)
- River/Stream
- Railroad

Miles
0 0.5 1

N

Data sources: Parcels (2010), Road names (VTrans/VCGI 2011), Railroad (VTrans/ VCGI 2003), Streams (VHD/VCGI 2008)

VT State Plane. Meters, NAD 83

For planning purposes only.
Not for regulatory interpretation.

Map drawn April 9, 2014

SWCRPC
SOUTHERN WINDSOR COUNTY
REGIONAL PLANNING COMMISSION
P.O. Box 320, Ascutney, VT 05030
802-674-9201 www.swcrpc.org